epowered by

BOSCH









LED REMOTE and KIOX 300, KIOX 500 or INTUVIA 100 E-BIKE QUICK START GUIDE

Welcome to the family!

This quick start guide explains the basic operation of the Bosch smart system on your e-bike. This guide is also available online in your language. Use the codes or links below to access the online guide.

Even if you've been riding a bike for years, you should read this guide, as well as:

- The Bicycle Owner's Manual that came with your e-bike
- The comprehensive Bosch smart system manual, found online at:

TREK

trekbikes.com/manuals

Diamant®

diamantrad.com/bike-handbuecher

Electra

electra.trekbikes.com/electra-manuals

These manuals contain important safety information and useful suggestions about the proper use and maintenance of your e-bike and how to properly dispose of electrical components. If you do not have access to a computer or the Internet, you can request a printed manual from your local authorized retailer.

⚠ Read all instructions.
What you don't know could seriously hurt you or others. Be smart. Read and know before you go.

The A-weighted emission sound pressure level at the driver's ears is less than 70 dB(A).

A fews things to know about riding your new e-bike

1. **Start slow**
   We know — fast is fun. But e-bikes take a bit of getting used to. It may be tempting to ramp your e-bike up to the fastest setting right away, but we recommend taking it nice and easy the first few rides. Start on the lowest assist setting and learn the feeling of pedal assistance.

2. **Brake sooner**
   E-bikes are heavier than normal bikes, and they move faster. More power, more speed, and more weight. Once you get moving, you'll need more time to react, so you should start slowing down sooner on your e-bike than you would on a normal bike. When you're getting used to your new e-bike, start braking with a lighter hand and a gradual pull of the brake levers. And never grab just your front brake lever — brake with both front and rear evenly.

3. **You're faster than you look**
   E-bikes look just like regular bikes, so drivers and pedestrians might not expect you to be riding as fast as your e-bike allows. Ride with extra care and pay greater attention to your surroundings.

4. **All bike rules still apply**
   While your new e-bike will bring you a new level of freedom and fun, you're still responsible for knowing and following all the rules of the road, paths, and trails in your area. Have fun out there, but with greater speed, there is greater responsibility!

Turn the bike ON or OFF

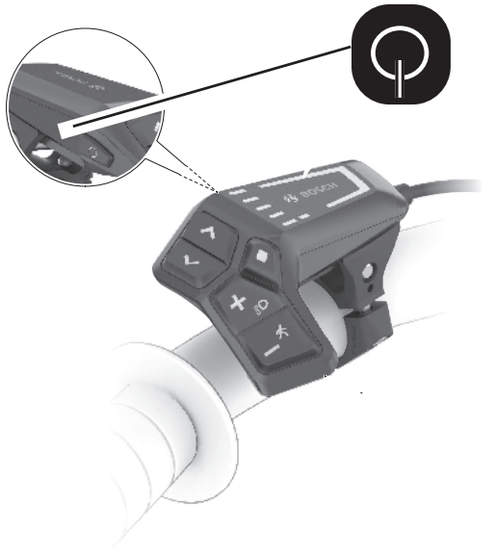

ON|OFF: Press and release
Pair with a smartphone: Press and hold

The e-system will automatically turn off if the e-bike is not moved, nor any buttons pushed for 10 minutes.

Lights (If wired to the e-system)



ON|OFF: Press and hold

Note: If front and/or rear lights are included with your e-bike, they may be programmed to turn ON or OFF when the e-bike is turned ON or OFF. In this case, the Lights button may not be functional.

Pedal assistance

You've got places to be and people to see, so get going.

Select an assist mode

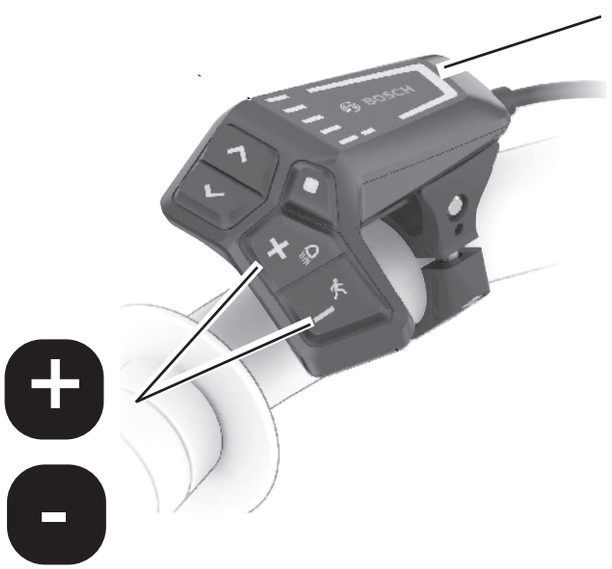

Red = Turbo

Purple = Automatic

Blue = Tour+

Green = Eco

Pedal assistance

Stops when:

- You stop pedaling
- You reach the maximum assist speed (Maximum speeds vary by region.)

Restarts when:

- You start pedaling again
- You are pedaling and your speed drops below the maximum assist speed

Assist mode on your display



OR



Walk assistance

Walk assistance provides a little push for those times when you are walking or pushing your bike.

⚠ **WARNING**: *Walk assistance should only be used when you are walking your bike. Never use walk assistance when you are riding your bike, or in situations where the wheels are not touching the ground.*





While holding the button, walk the bike forward or backward to activate walk assistance. Shifting your bike into a higher gear increases the speed of walk assistance, up to approximately 4mph/6kph.

Scroll screens / change settings

Settings: Language • Units • Time • Shift recommendation • Brightness • Settings reset



Next or previous screen





Access the second level of data. Hold to reset trip data.



Scroll up or down

Note: Some settings cannot be accessed while riding.

Battery

Charge the battery

- The battery is supplied partially charged. For best performance, fully charge the battery before riding your e-bike.
- The battery can be charged while installed on the e-bike. On some e-bikes the battery can be removed from the bike for charging.

⚠ **WARNING***:* Be safe. Follow these safety warnings when charging your battery:

- Only charge the battery with a Bosch smart system charger. Using the wrong charger risks the life of the battery and presents a potential fire hazard.
- Only use the charger in dry, indoor areas.
- Do not leave a charging battery unattended.
- When the battery is fully charged, disconnect the charger from the battery and the wall socket.

On the e-bike

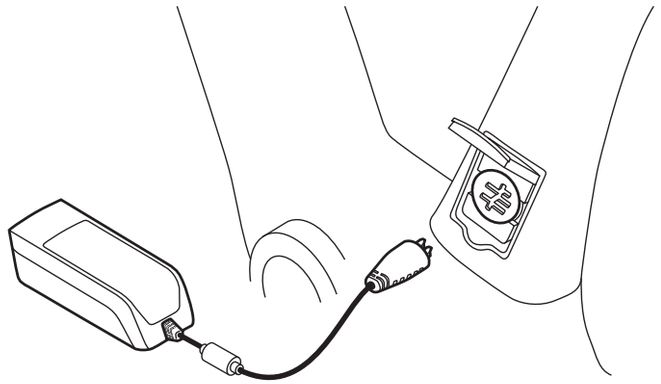

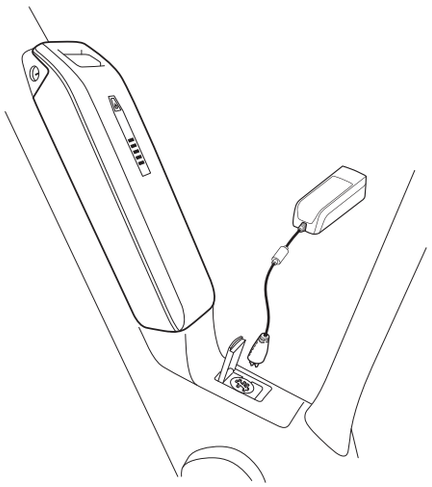

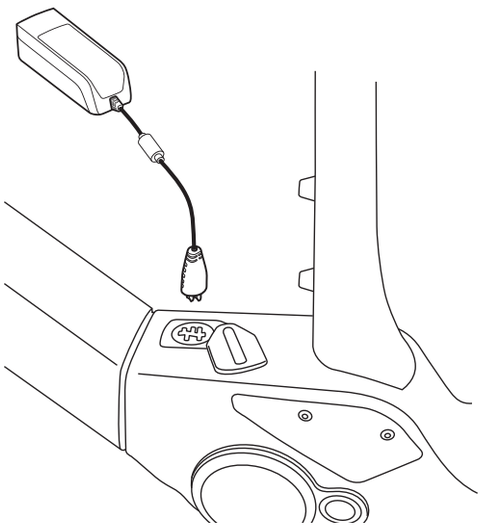

Off the e-bike

Depending on your e-bike, the battery may or may not be removable for charging.

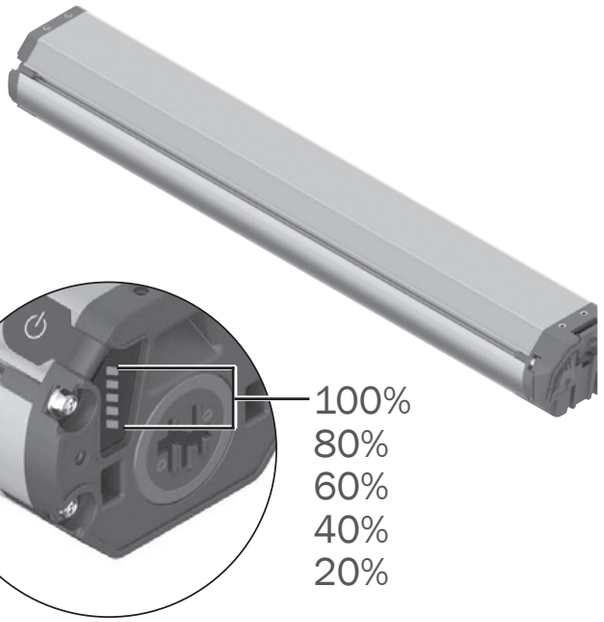

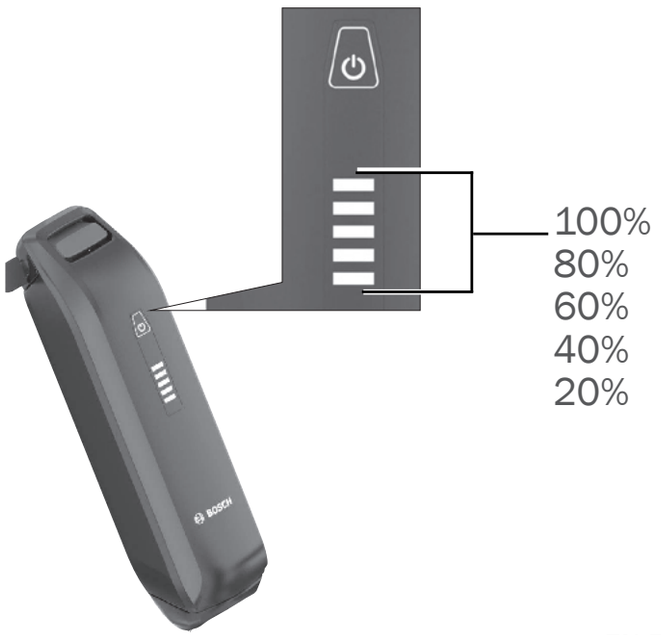

Battery charge level



OR



AND

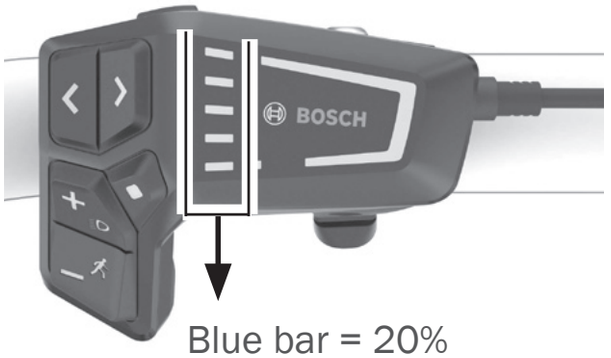

Blue bar = 20%
White bar = 10%
4 blue LEDs
+ 1 white LED
= 81% to 90% charged

Low battery indicator
The bottom two LEDs change color.
2 orange: 30% to 21%
1 orange: 20% to 11%
1 red: 10% to reserve
1 red flashing: reserve to empty

Install or remove the battery

Before installing or removing the battery, make sure the battery and e-bike are OFF. No LEDs should be illuminated on the remote or the battery.
Note: Depending on your e-bike, the battery may or may not be removable.

Install: 1 ▸ 2 ▸ 3 **Remove:** 3 ▸ 2 ▸ 1

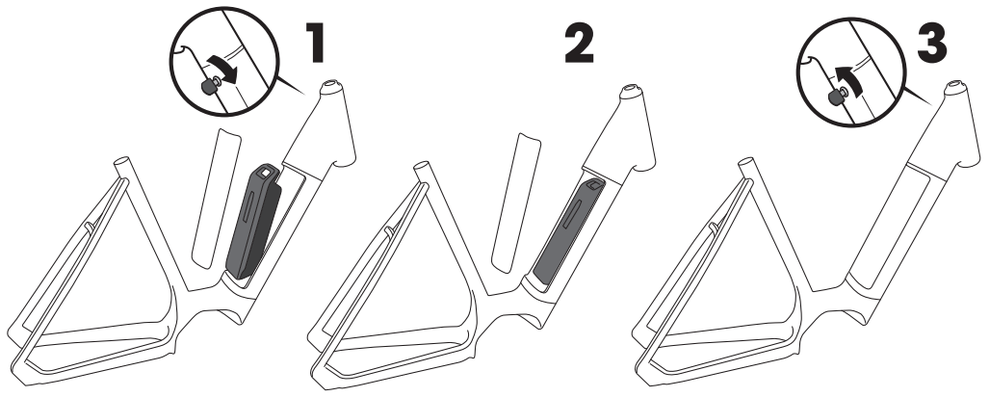

OR

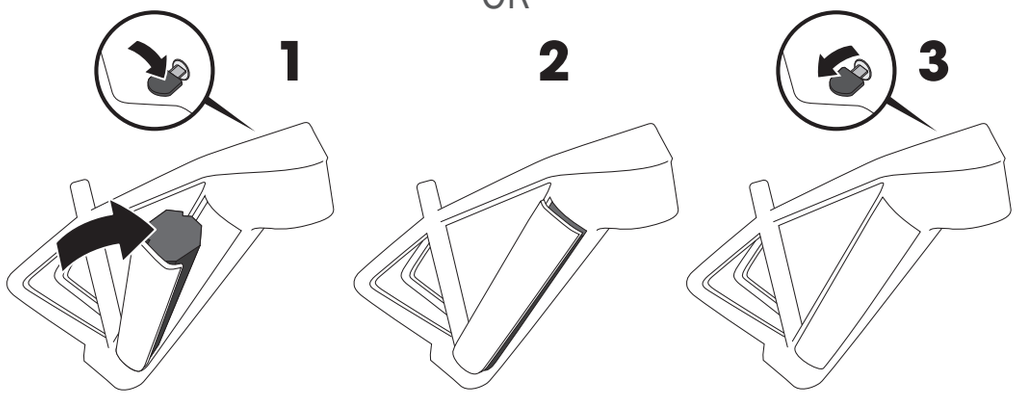

OR

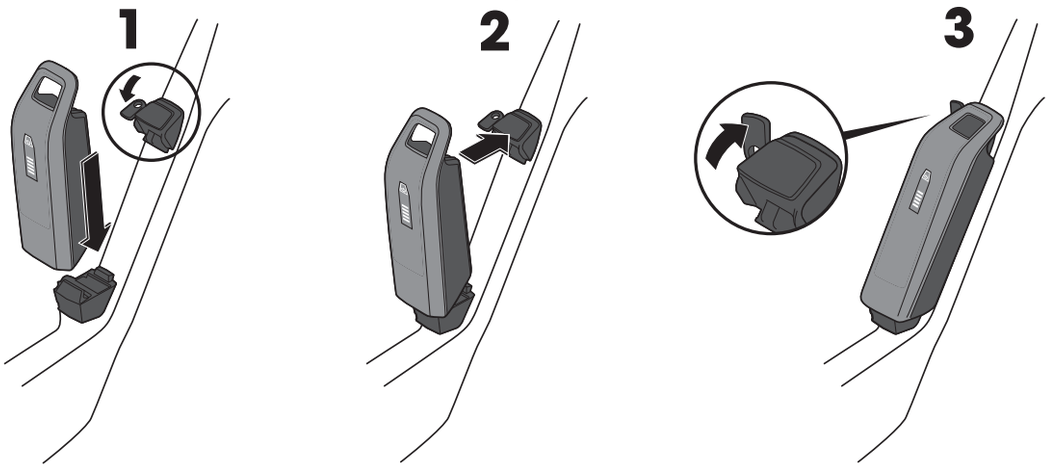

Care for your battery and e-bike

Along with the fun of having an e-bike comes a few special warnings to keep you and your bike safe.

⚠ Install accessories carefully

Consult with a certified e-bike technician before installing accessories. Using the wrong bolt in the wrong place could cause a short circuit in the electrical system and/or damage the battery which might lead to over-heating. A battery that has been severely impacted could catch fire. If you suspect damage to your battery, visit your local bike shop immediately to have the battery inspected.

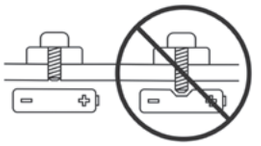

⚠ Store the battery properly

If you won't be riding your e-bike for 3 months or more, remove the battery from the e-bike, and take the following steps to properly store it.

- Store your e-bike battery in a dry, ventilated location that is away from moisture, heat sources, and combustible or easily flammable objects.
- Store your battery at the recommended temperature. Storing your battery outside of this range could damage the battery, affect its performance, or cause the battery to catch fire.

  Storage range: 50°F – 104°F (10°C – 40°C)

- Monitor the battery charge. Keep the battery charged to a minimum of 30% to 60%. The battery can be damaged by deep discharge.
- When the battery charge is restored, remove the battery from the charger. Do not store your battery connected to the charger.

⚠ Transport your e-bike safely

- The Bosch drive system adds weight to the bicycle. Overloading a bicycle rack can result in death or serious injury. Refer to your bicycle rack manual to be sure it is compatible with your e-bike.
- Remove the battery from the e-bike and put it in the passenger cabin for safe and secure transport. A battery left on the e-bike could loosen during transport and become a hazard.
- If the battery cover on your e-bike is magnetic, always remove the battery from the e-bike and then use the provided strap to secure the battery cover while transporting the e-bike.

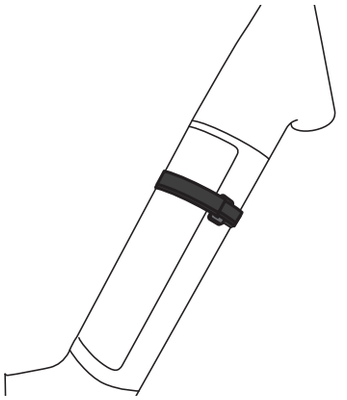

- Do not leave your battery in a vehicle or in a location that may become very hot or very cold. Make sure the battery is within the recommended ambient operating temperature range of 23°F (-5°C) to 104°F (40°C) during transport. Extreme temperatures could damage the battery or create a fire hazard.
- Check with local transportation authorities regarding special rules or laws for transporting your e-bike via public transportation, such as buses or trains.

⚠ Wash your e-bike gently

Do not submerge your e-bike or its components in water or wash them with a high-pressure hose. Water could contact the electrical system and damage it.

⚠ Repair and maintain your e-bike safely

Always remove the battery before beginning any maintenance work on your e-bike. Never attempt to open any parts of the electrical system. Always contact your local bike shop to service any parts of the electrical system.

Contact

TREK

US Head Office
Trek US
Customer Service
801 W Madison Street
Waterloo, Wisconsin 53594 USA
Tel.: 920.478.4678

European Head Office
Bikeurope B.V./Trek Benelux
Customer Service
Ceintuurbaan 2-20C
3847 LG Harderwijk
The Netherlands
Tel.: +31 (0)88-4500699

United Kingdom
Trek Bicycle Corporation Ltd.
9 Sherbourne Drive, Tilbrook,
Milton Keynes, MK7 8HX
Tel: +44 1908 360 140

Australia & New Zealand
Trek Australia & New Zealand
Customer Service
PO Box 1747
Fyshwick, ACT2609
Australia

Australia
Tel.: +61 2 6173 2400
customerservice_australia@trekbikes.com

New Zealand
Tel.: 0800-873-569
customerservice_newzealand@trekbikes.com

Diamant®

European Head Office
Trek Fahrrad GmbH
Auenstrasse 10
CH-8600 Dübendorf
Switzerland
Tel.: 00800 8735 8735

Electra

US Head Office
Electra Bicycle Company
364 2nd Street
Encinitas, CA 92024
USA
Tel.: 1.800.261.1644

European Head Office
Bikeurope B.V.
Ceintuurbaan 2-20C
3847 LG Harderwijk
The Netherlands
Tel.: +31 (0)88-4500699

TREK

Electra

Diamant

© 2023 Trek Bicycle Corporation