TREK

Product Support

MY20 Allant+ Carbon Parts Quick Reference

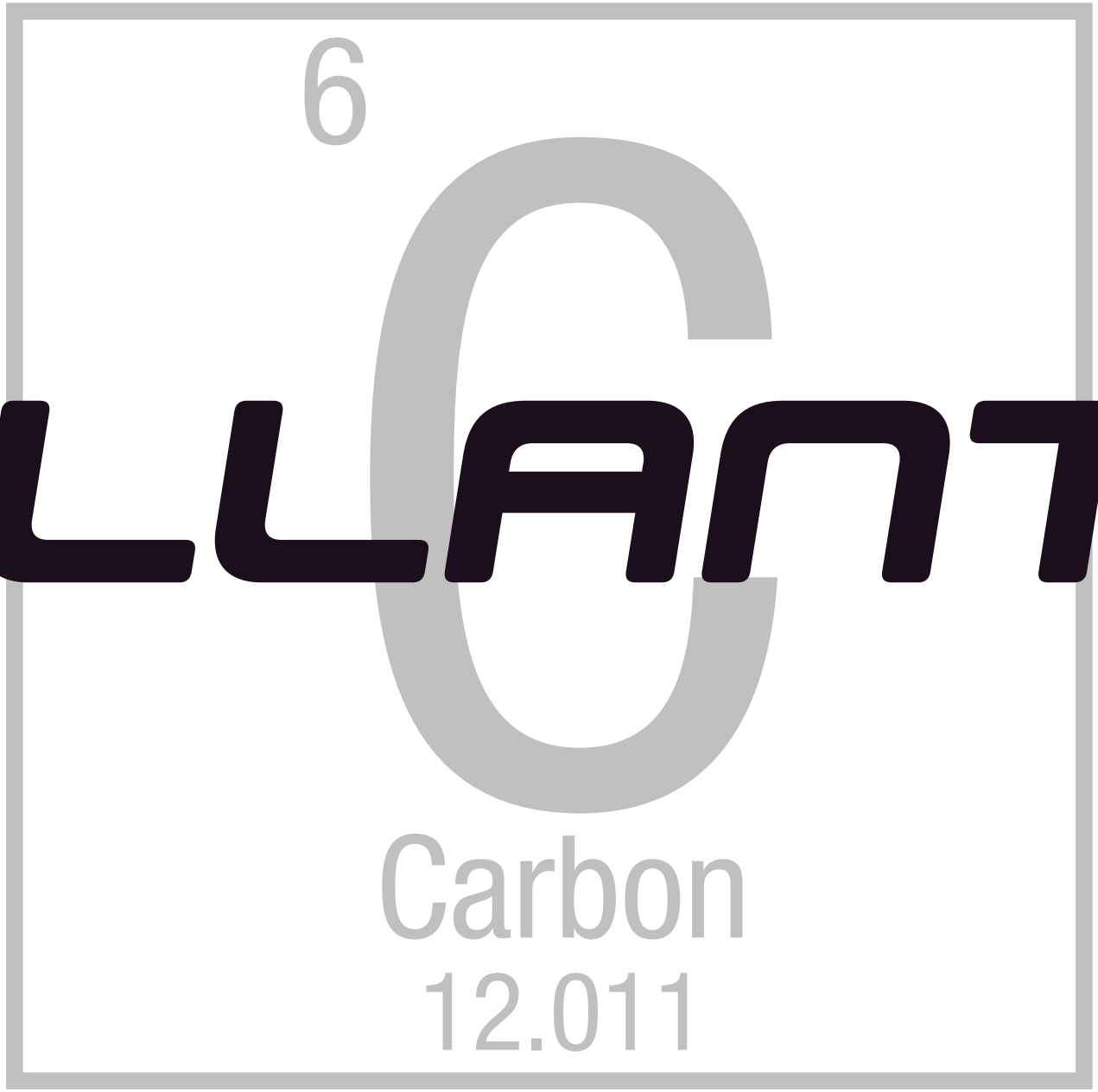

ALLANT+

TREK

Product Support

MY20 Allant+ Carbon Parts Quick Reference

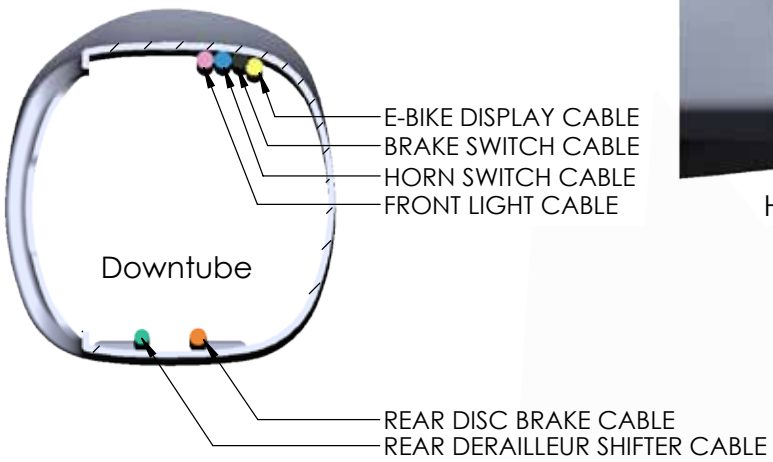

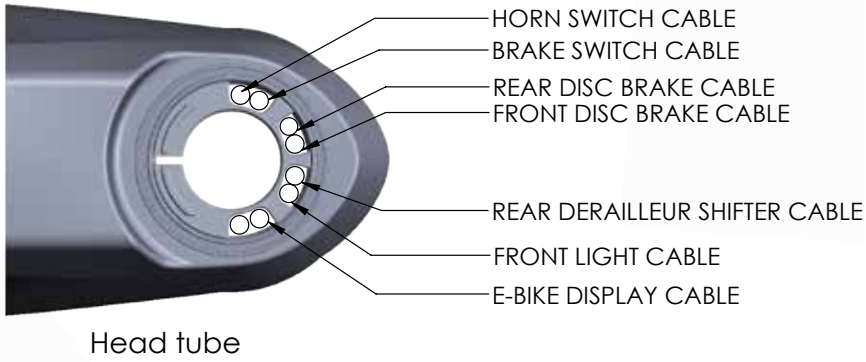

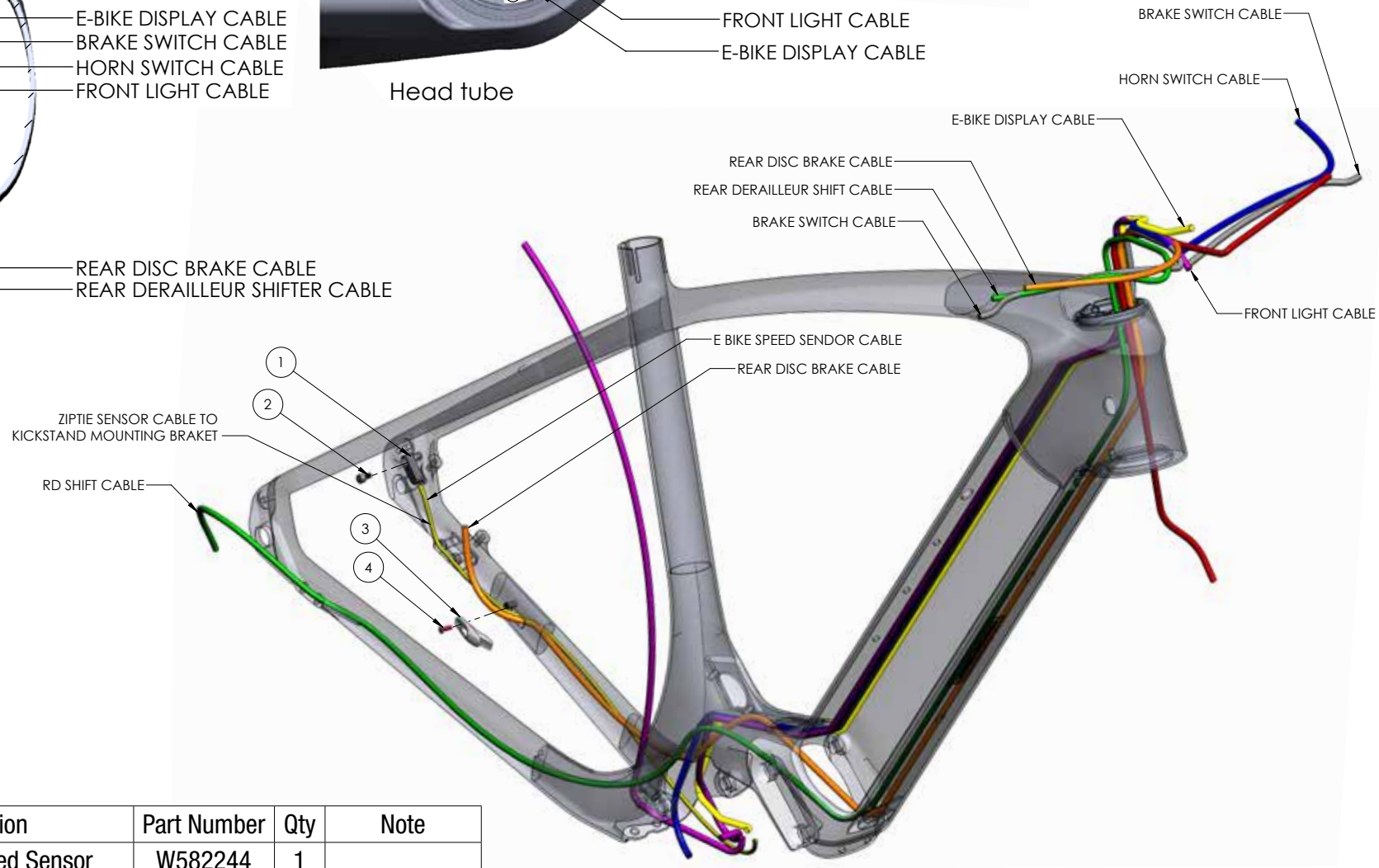

Item	Description	Part Number	Qty	Note
1	Integrated Speed Sensor	W582244	1	
2	M4x8mm Bolt	n/a	1	
3	Chainstay Housing Guide	581792	1	
4	M3x10mm Bolt	W285213	1	

TREK

Product Support

MY20 Allant+ Carbon Parts Quick Reference

Item	Description	Part Number	Qty	Note
6	Chainstay Guard	W583927	1	
7	Range Boost Cover	W581454	1	
8	Range Boost Plug		1	
9	M3x8mm Bolt		1	Torque 0.3Nm
10	M3x12mm Bolt	W586959	1	Torque 0.7Nm
11	Steerer Stop	W586959	1	
12	Derailleur Hanger	W572370	1	
13	Derailleur Hanger Nut	W318004	1	Torque 23Nm
14	Rear Thru Axle	W565791	1	174.5mm Length M12x1.75x22mm Threading Torque 10Nm
15	Kickstand Bracket	W581379	1	
16	M6x35mm Bolt	n/a	2	DIN912, M6x35, A2-70, Torque 5Nm
17	Derailleur Protector	W581380	1	
18	M5 Washer	n/a	6	DIN125 A, M5, A2
19	M5x12mm Bolt	n/a	2	DIN7380-1, M5x12, A2, TX25 Torque 4Nm

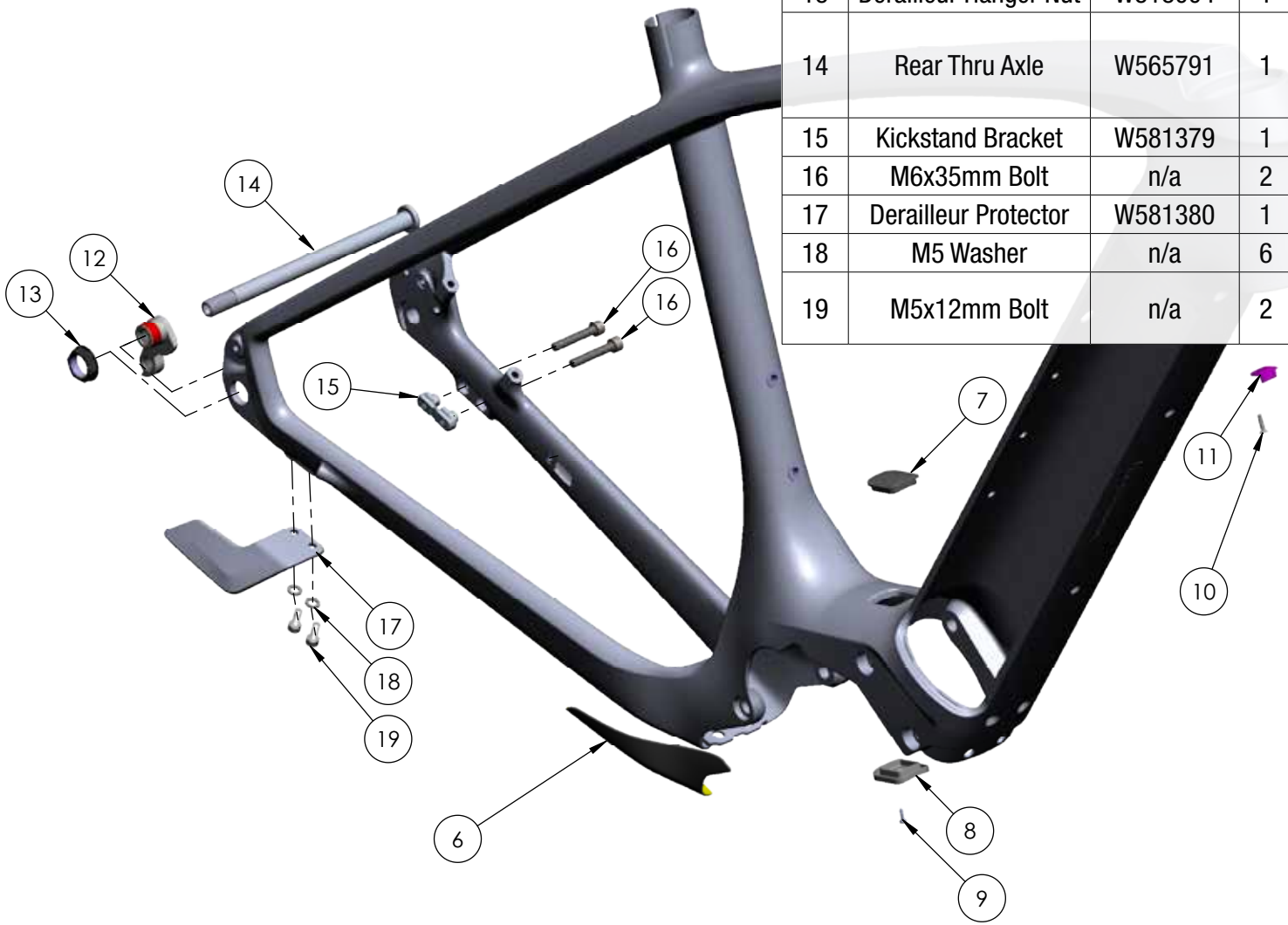

TREK

Product Support

MY20 Allant+ Carbon Parts Quick Reference

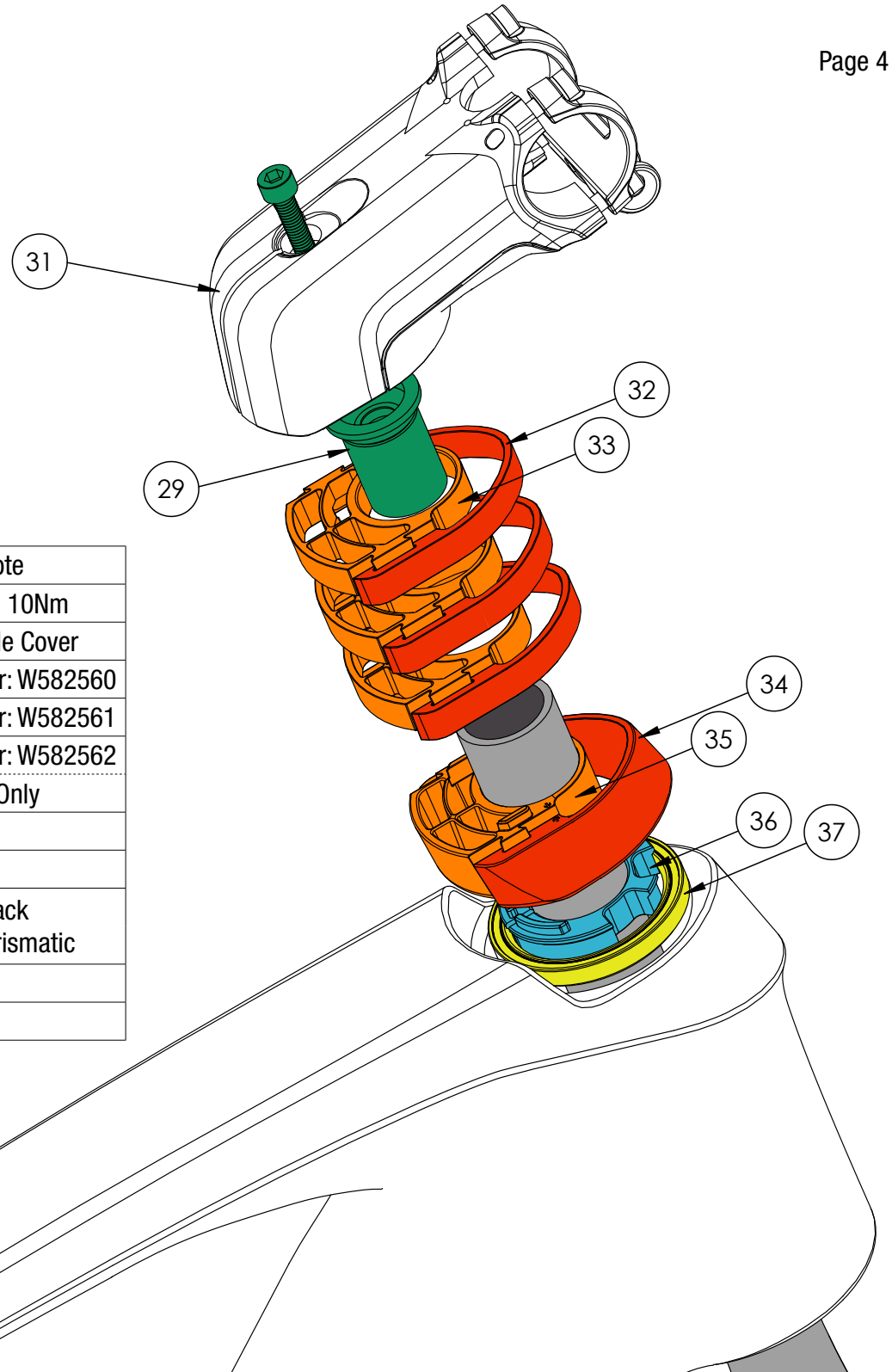

Item	Description	Part Number	Qty	Note
29	Carbon Expander Plug	W547432	1	Torque 10Nm
31	Integrated Stem, 45mm	W584769	1	No Cable Cover
	Integrated Stem, 75mm	W584770		Cable Cover: W582560
	Integrated Stem, 95mm	W584771		Cable Cover: W582561
	Integrated Stem, 115mm	W584772		Cable Cover: W582562
	Light Mount Faceplate	W581834	1	EU Only
32	10mm Headset Spacer, Front	588931	3	
33	10mm Headset Spacer, Rear		3	
34	Headset Top Cap, Front	594729	1	Black
35	Headset Top Cap, Rear	5268824	1	Dark Prismatic
36	Headset Compression Ring	588930	1	
37	Upper Headset Bearing		1	

Product Support

MY20 Allant+ Carbon Parts Quick Reference

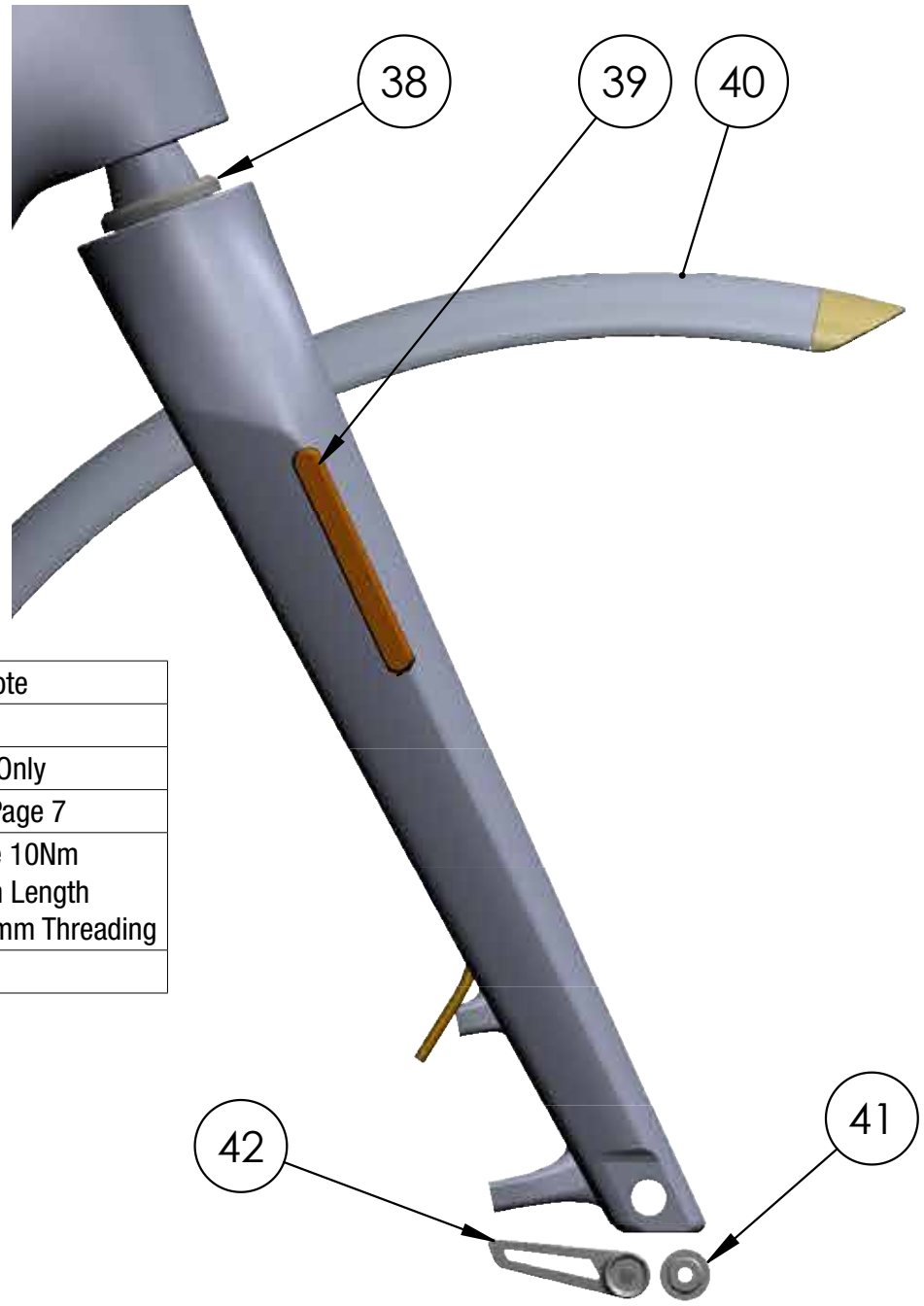

Item	Description	Part Number	Qty	Note
38	Lower Headset Bearing	588930	1	
39	Fork Side Reflector	W557145	2	EU Only
40	Front Fender	593520	1	See Page 7
41	Switch Thru Axle	W582055	1	Torque 10Nm 125mm Length M15x1.5x10mm Threading
42	Switch 6mm “Handle”	W573860	1	

TREK

Product Support

MY20 Allant+ Carbon Parts Quick Reference

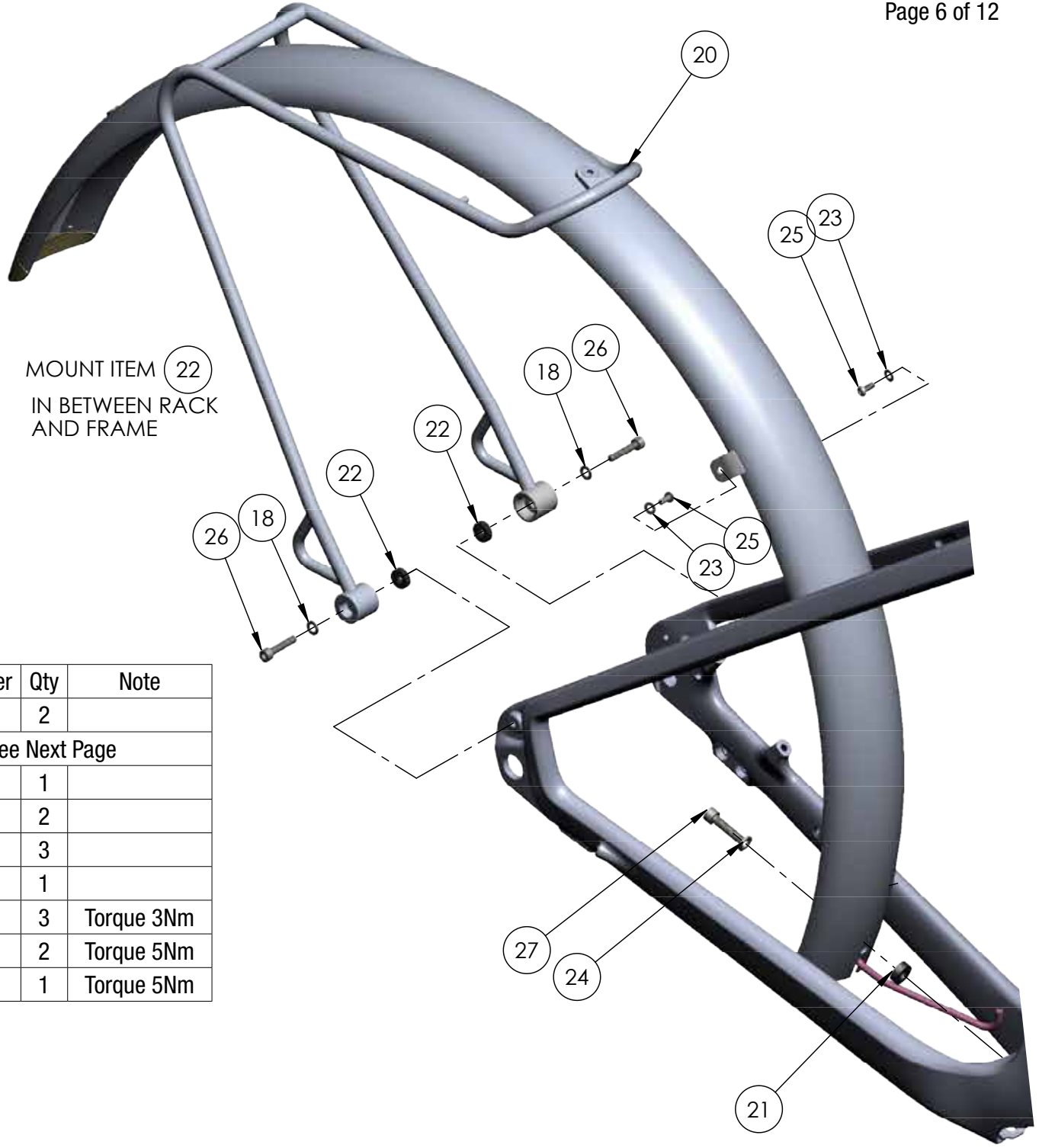

Item	Description	Part Number	Qty	Note
18	M5 Washer	W579467	2	
20	Rack + Fender Assembly	See Next Page		
21	6.4x15x5mm Spacer	598829	1	
22	5.3x14x4mm Spacer	W579467	2	
23	M4 Washer	W579386	3	
24	M6 Washer	598829	1	
25	M4x10mm Bolt	W579386	3	Torque 3Nm
26	M5x25mm Bolt	W579467	2	Torque 5Nm
27	M6x25mm Bolt	598829	1	Torque 5Nm

TREK

Product Support

MY20 Allant+ Carbon Parts Quick Reference

Item	Description	Part Number	Qty	Note
1	Rear Rack	W579467	1	
2	Fender Bracket	W579386	1	
3	Wire Cover	W581644	1	
4	Fender “Nose”	W579384	1	
5	M2x5mm Screw		2	
6	M4 Washer	n/a	1	
7	M6 Washer	W579467	2	
8	M6 Lock Nut		2	
9	M6x14mm Countersunk Bolt		2	Torque 5Nm
10	Rear Fender	593521	1	
11	Tail Light	W564558	1	US
		W544077		EU
		W543228		EU Speed
12	M4x14mm Bolt	W327525	1	

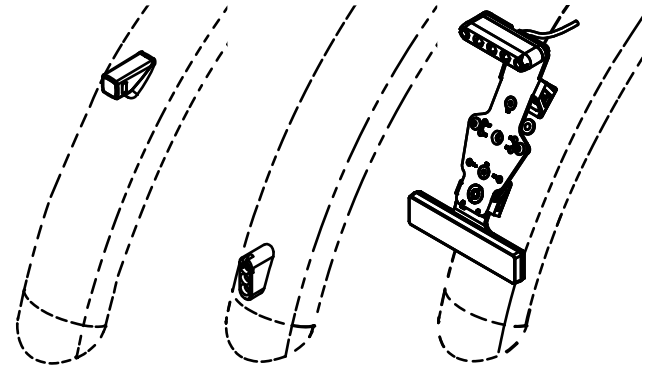

W564558 W544077 W543228

Description	Part Number	Qty	Note
Tail Light	W564558	1	US
	W544077		EU
	W543228		EU Speed 45 km/h

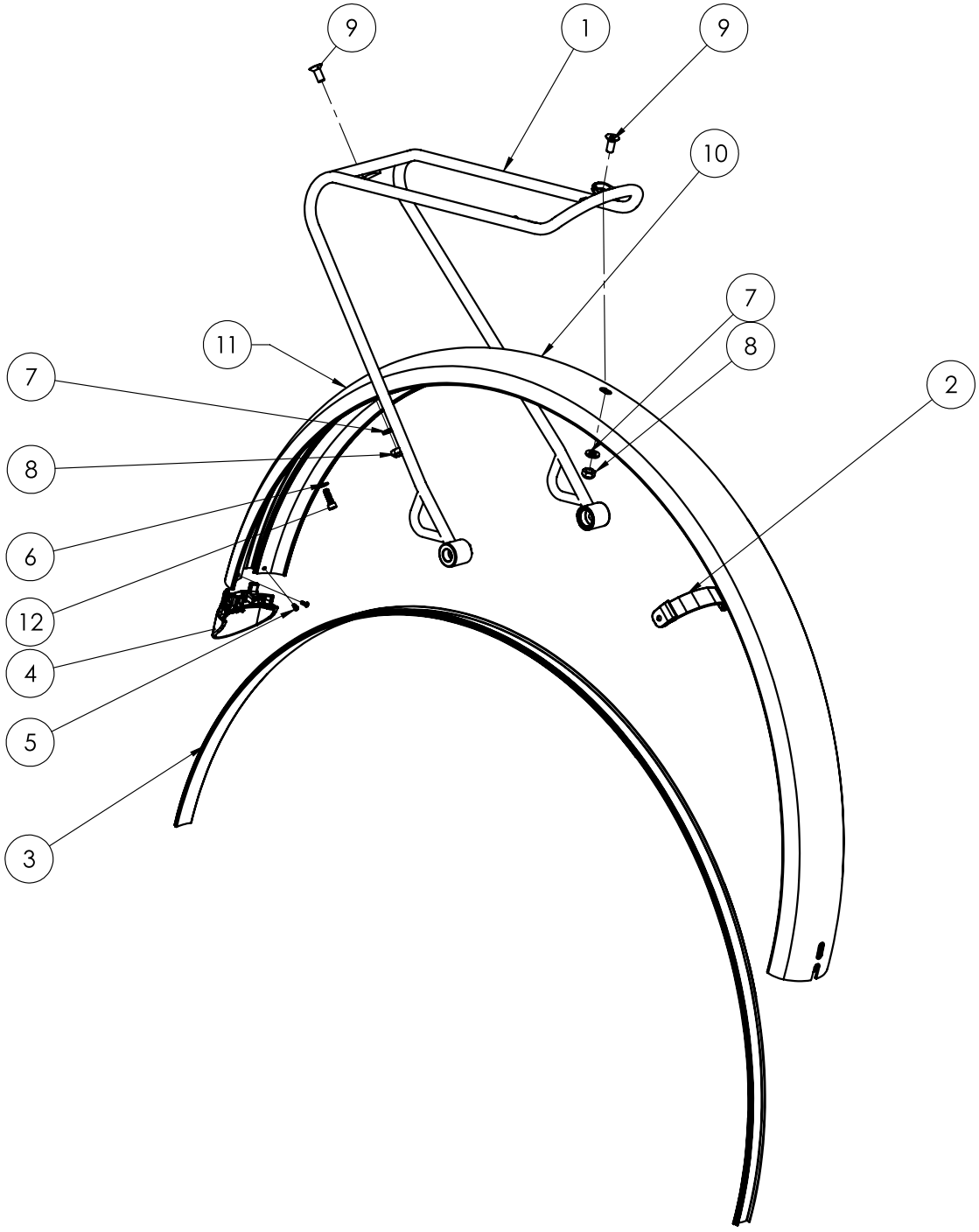

Product Support

MY20 Allant+ Carbon Parts Quick Reference



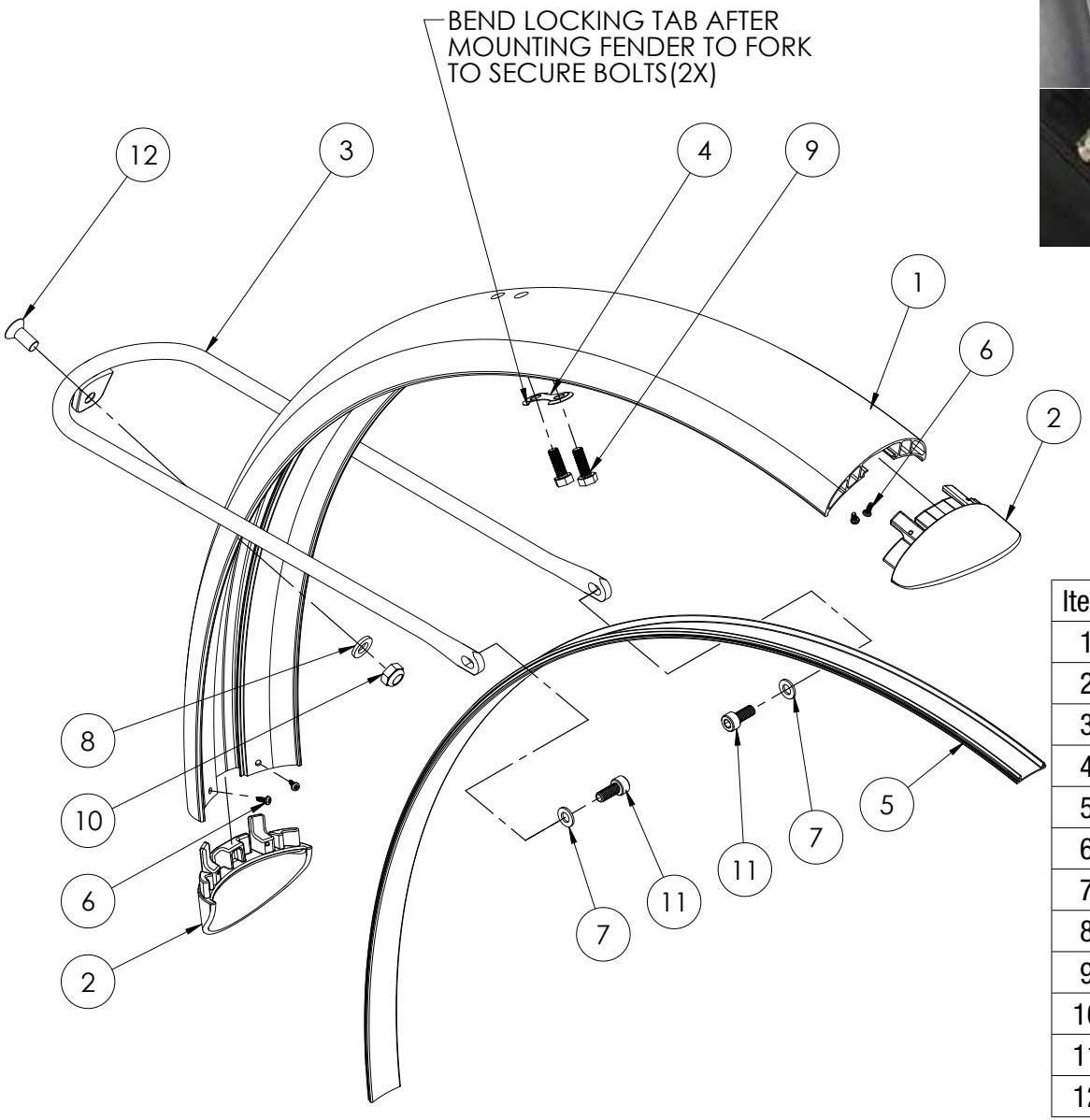

Item	Description	Part Number	Qty	Note
1	Front Fender	593520	1	
2	Fender “Nose”	W579384	2	
3	Fender Stay	W602230	1	
4	Locking Tab	W579387	1	
5	Wire Cover	W582941	1	
6	M2.5x5mm Bolt	W579384	4	
7	M5 Washer	W602230	2	
8	M6 Washer	W602230	1	
9	M5x14mm Bolt w/ Threadlock	W579387	2	Torque 4Nm
10	M6 Locknut	W602230	1	
11	M5x12mm Bolt w/ Threadlock	W602230	2	Torque 4Nm
12	M6x14mm Countersunk Bolt	W602230	1	Torque 5Nm

TREK

Product Support

MY20 Allant+ Carbon Parts Quick Reference

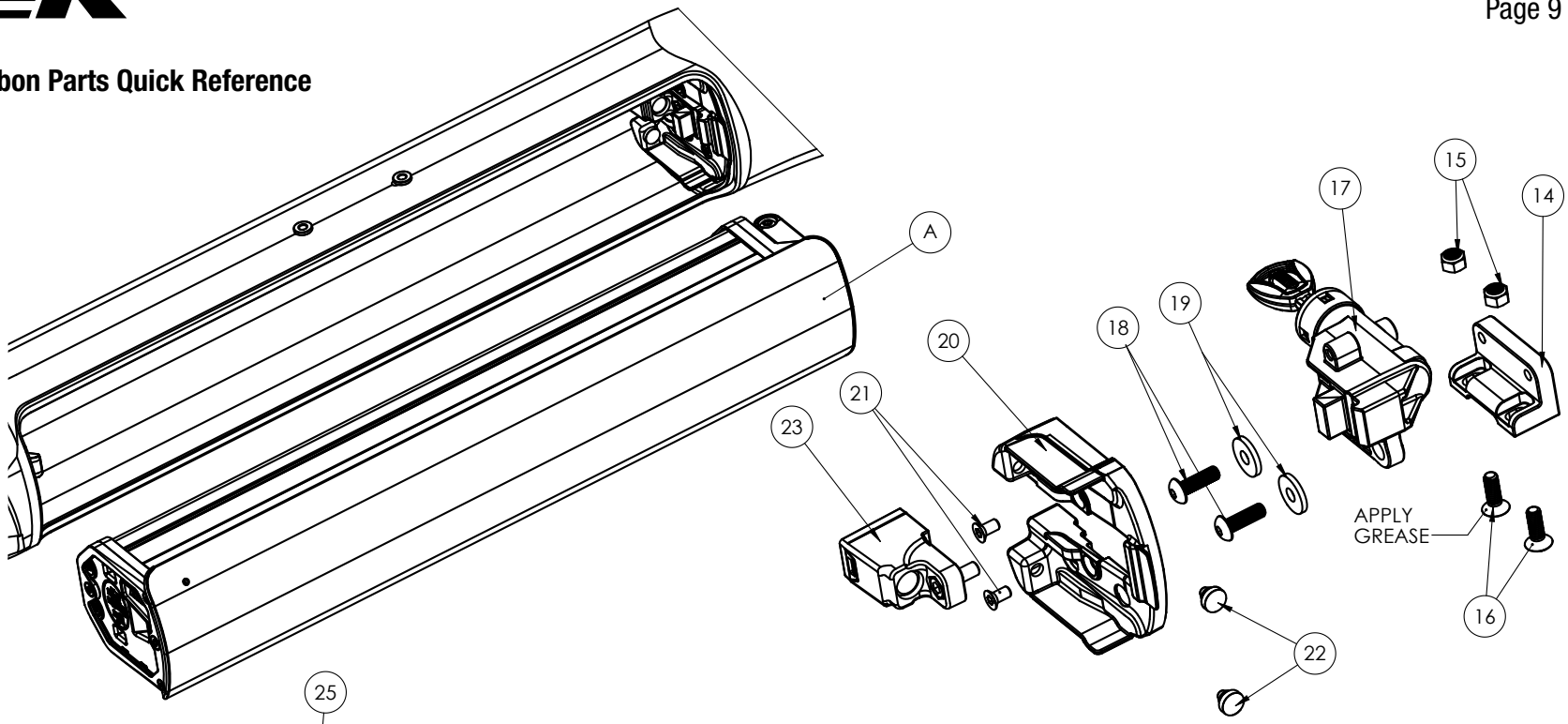

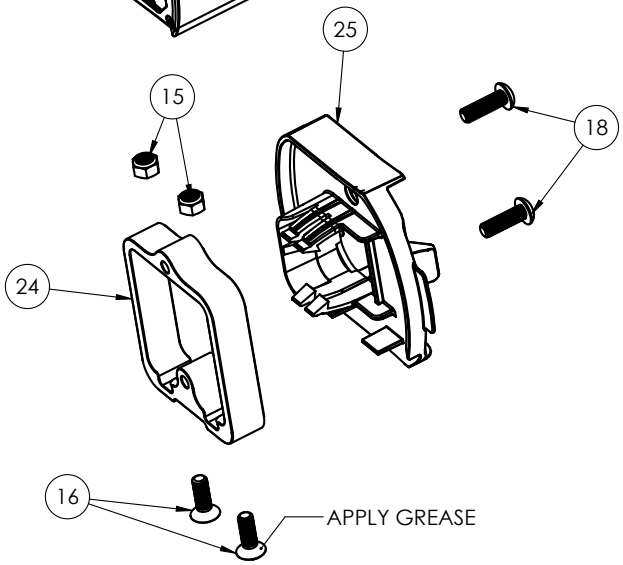

Item	Description	Part Number	Qty	Note
A	Battery Assembly	See Next Page		
14	Upper Frame Bracket	580066	1	
15	M5 Locking Nut	599883	4	
16	M5x15mm T25 Security Torx	599883	4	Torque 5Nm, Apply Grease to Head
17	ABUS Lock Core	W562311	1	
18	M5x16mm Bolt	579247	4	Torque 5Nm
19	15x5.3x2mm Washer	579247	2	
20	Upper Docking Bracket	584097	1	
21	M4x8mm Bolt	579247	2	Torque 2Nm
22	Battery Bumper	584097	2	
23	Ejector Assembly	579324	1	Torque 5Nm
24	Lower Frame Bracket	580066	1	
25	Lower Docking Bracket	584097	1	

Product Support

MY20 Allant+ Carbon Parts Quick Reference

Item	Description	Part Number	Note
A	RIB Battery Cover	593641	Matte Black / Silver
		5264350	Dark Prismatic

Item	Description	Part Number	Qty	Note
B	Handle Assembly	572657	1	
C	Spring Cap	572657	1	
D	Battery Handle Spring	W577275	1	
E	M4x8mm Bolt	579092	6	Torque 2.4Nm
F	Lower Battery Cover	W555588	1	
G	M3x20mm Bolt	579092	4	
H	500W RIB Spacer	W582323	1	
I	M4x12mm Bolts	W582323	4	Torque 2.4Nm
J	12x4x1mm Washer	n/a	4	

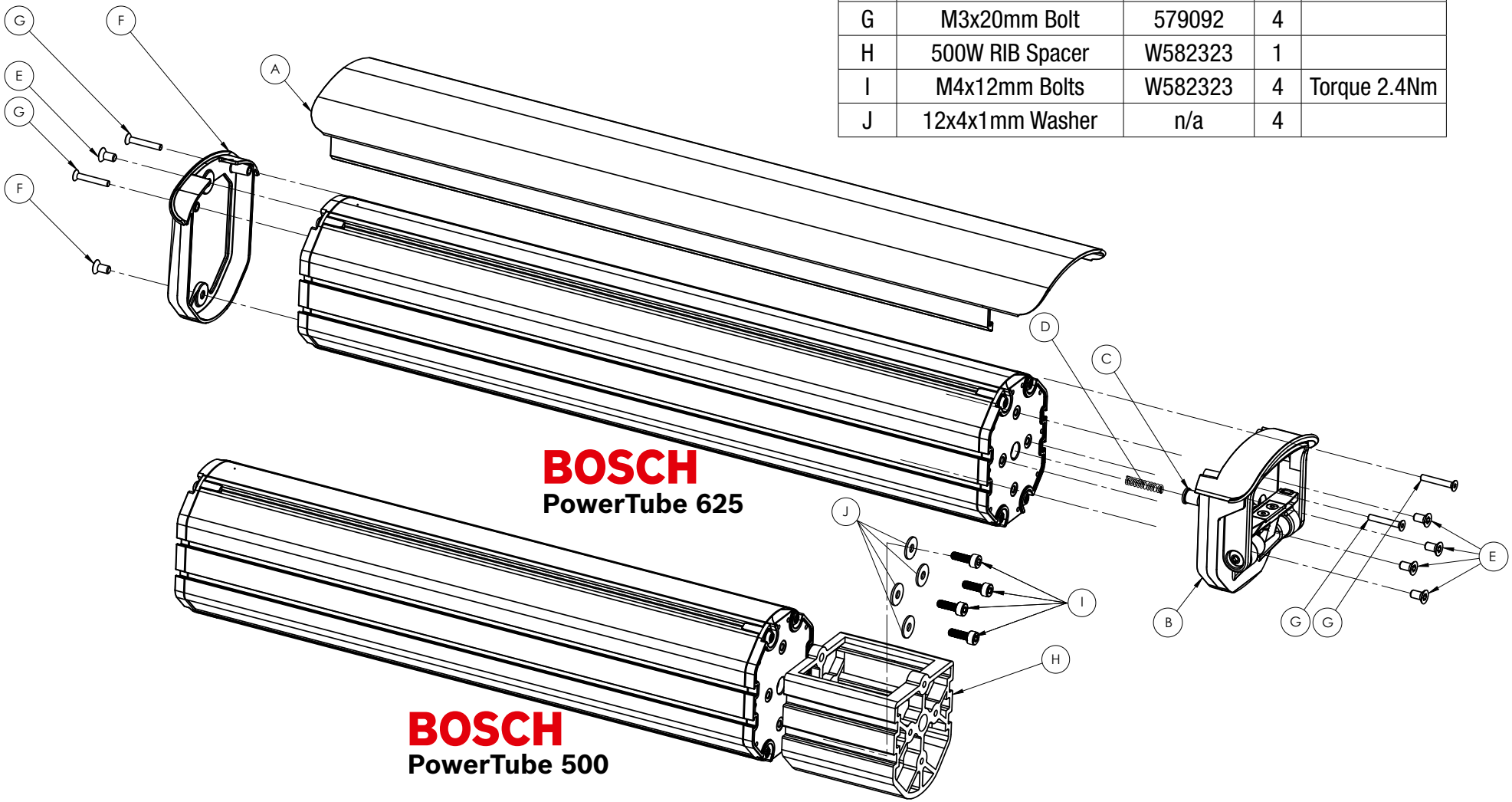

Item	Description	Part Number	Qty	Note
18	M5 Washer	594765	6	
23	M4 Washer	W581381	3	
25	M4x10mm TX20	W581381	1	Torque 3Nm
51	Bosch Drive Unit	Bosch	1	
52	M8x16mm TX40	Bosch	6	Torque 20Nm
53	Motor Cover	596467	1	Black
		5268823		Dark Prismatic
54	Horn Mounting Bracket	W581381	1	
55	Sheet Metal Nut	594765	4	
56	Eletronic Horn	W589996	1	EU Models Only
57	M5x20mm	W581381	1	Torque 3Nm
58	M5 Nut	W581381	1	
59	ISO1485C ST4.8x16, A2, TX25	594765	2	Torque 3Nm
60	ISO1486C ST4.8x16, A2, TX25	594765	2	Torque 3Nm
61	Internal Cable Sleeve	W581839	1	
62	Range Boost DT Plug	W581453	1	
63	M4x8mm	W581839	2	Torque 3Nm
64	M5x8mm	W581839	3	Torque 4Nm

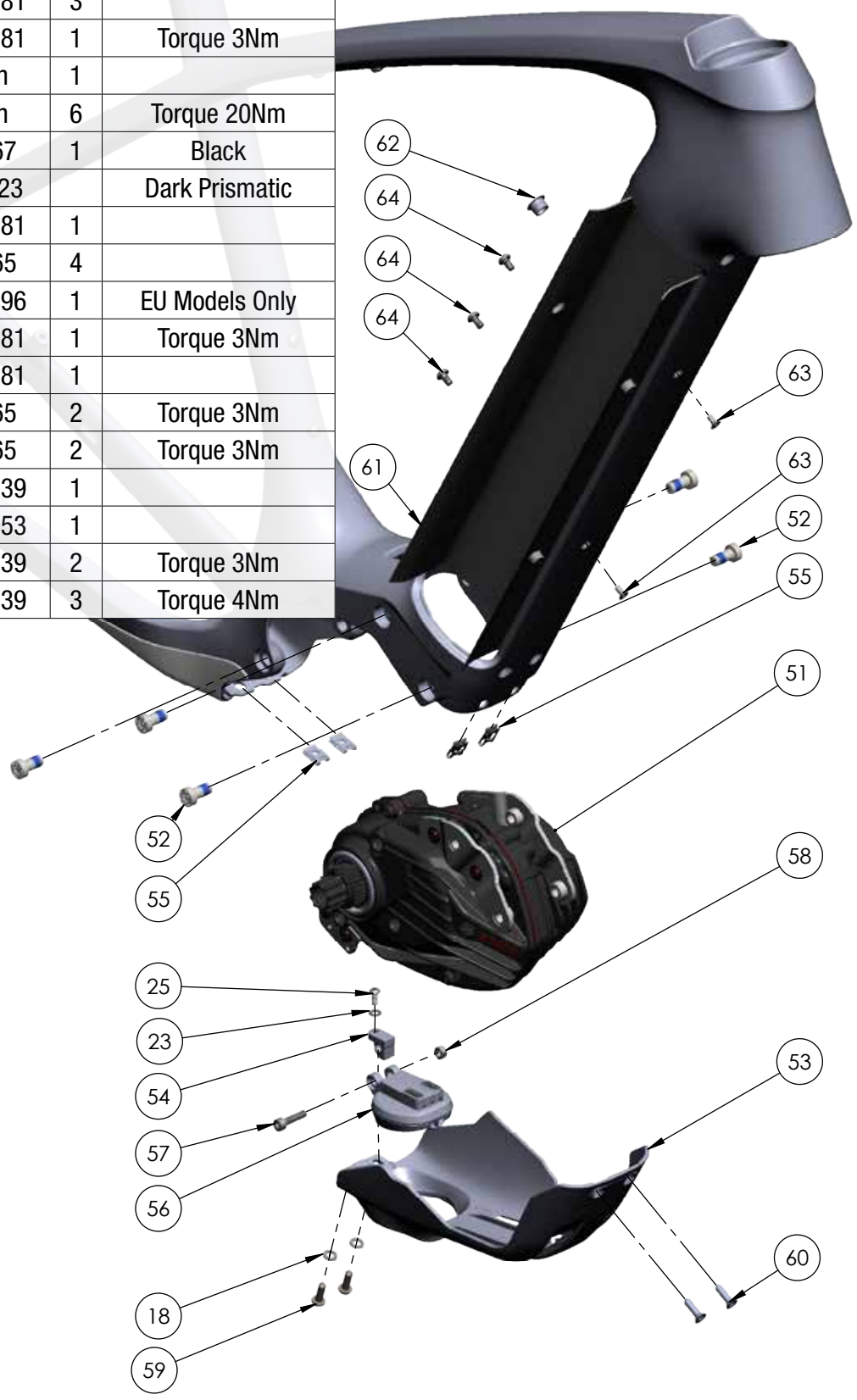

TREK

Product Support

MY20 Allant+ Carbon Parts Quick Reference

Item	Description	Part Number	Qty	Note
45	Bosch Charging Socket	Bosch	1	
46	Bosch O-Ring	Bosch	1	
48	Charge Port Cover	W593445	1	
49	M3x10mm Bolt	W593445	2	Torque 1Nm

