TREK

Product Support

MY20 Allant+ Alloy Parts Quick Reference



ALLANT+

Product Support

MY20 Allant+ Alloy Parts Quick Reference

Item	Description	Part Number	Qty	Note
1	Frame		1	
2	Non-Drive Side Sliding Dropout	W581362	1	
3	Elongated Washer		4	
4	M8x14mm Fastening Bolt		4	Torque 8Nm
5	M5x38mm Adjusting Bolt		2	
6	Drive Side Sliding Dropout	W581363	1	
7	M5x12mm Bolt	W581362	1	Torque 5Nm

Item	Description	Part Number	Qty	Note
1	Frame		1	
2	Derailleur Hanger Nut	W990121	1	
3	M5x10mm Bolt	W549305	4	Torque 5Nm
4	Derailleur Protector	W581380	1	
5	Derailleur Hanger	W301608	1	
6	Derailleur Hanger Bolt	W990129	1	Torque 5Nm

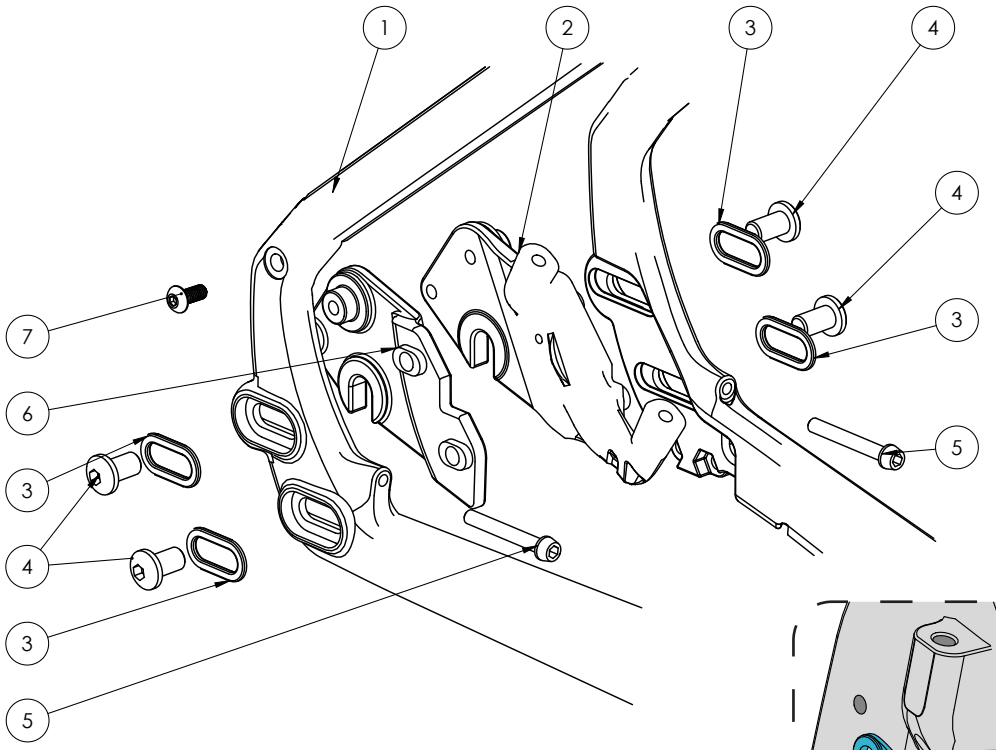

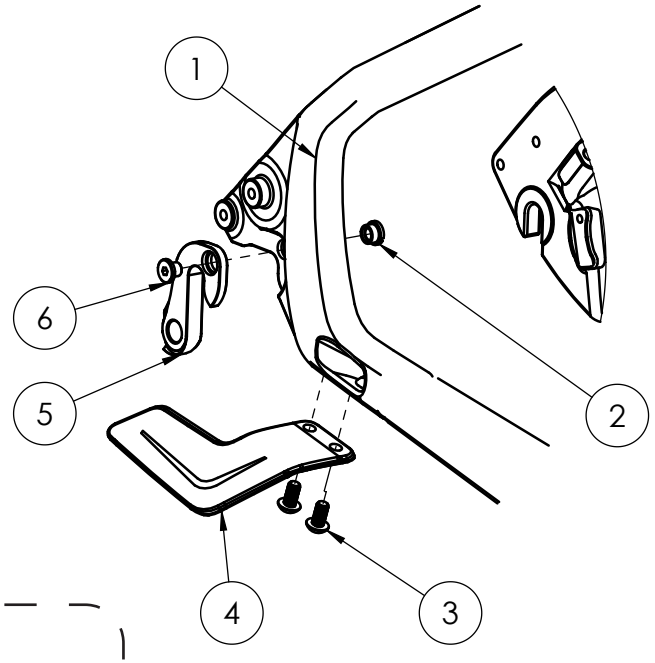

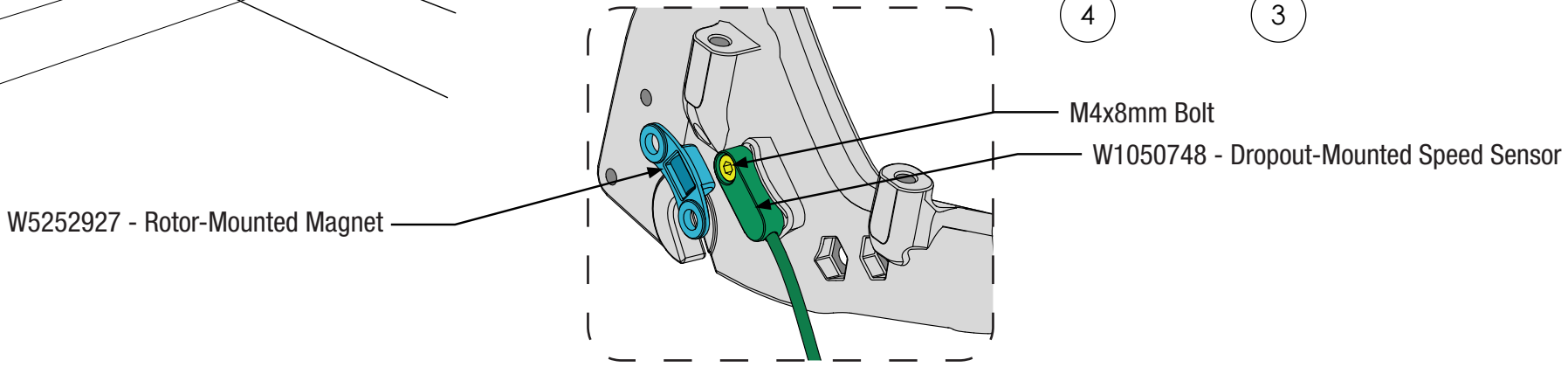

TREK

Product Support

MY20 Allant+ Alloy Parts Quick Reference

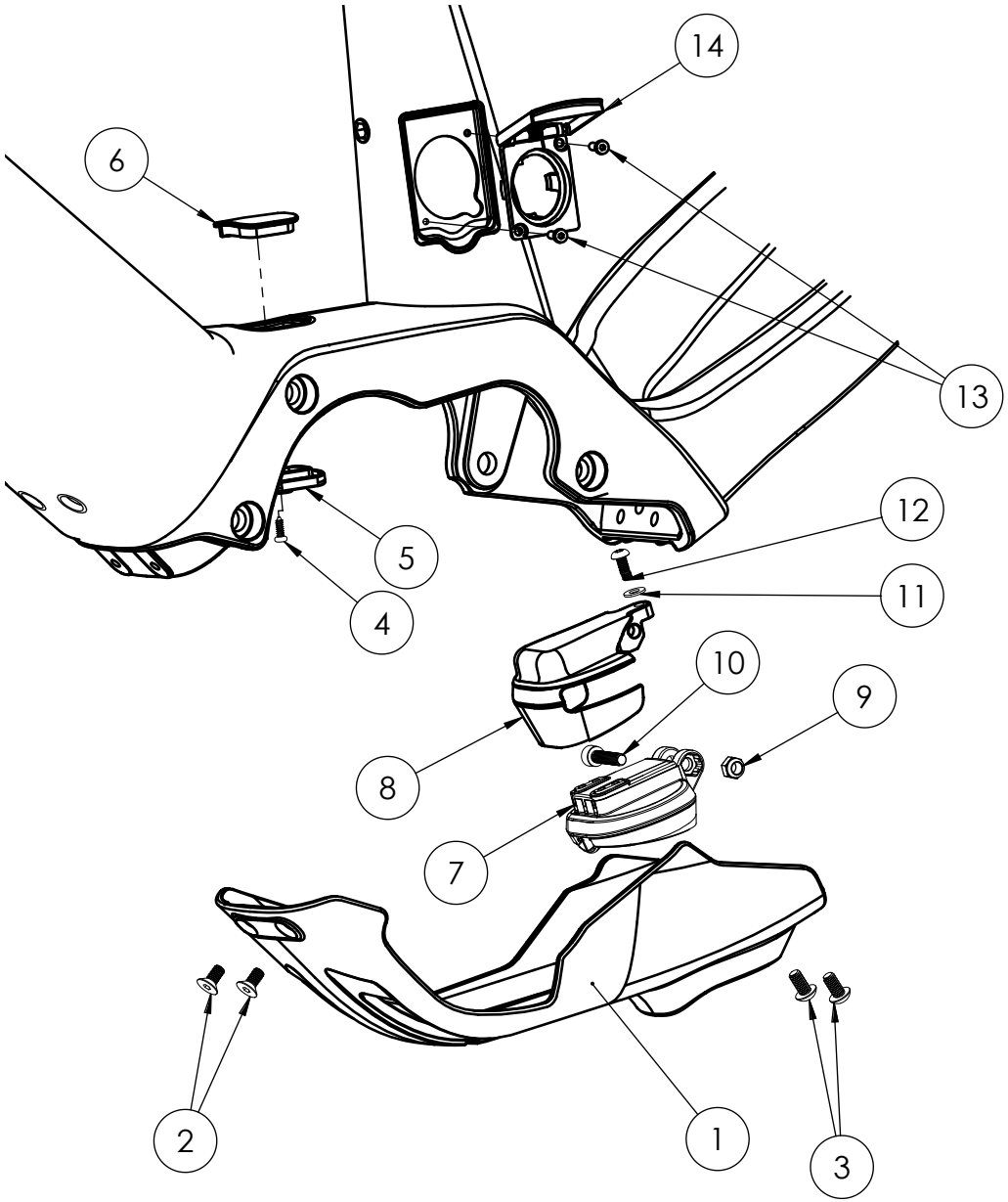

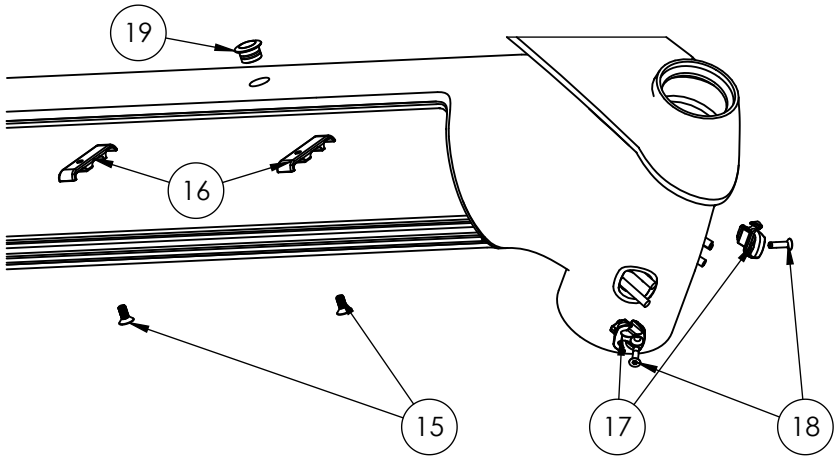

Item	Description	Part Number	Qty	Note
1	Motor Cover	596467	1	
2	M5x10mm Countersunk Bolt	594765	2	
3	M5x10 Button Head Bolt		2	
4	M3x8mm Bolt	W581454	1	
5	Range Boost Square Plug		1	
6	Range Boost Square Cover		1	
7	Speed Pedelec Horn	W589996	1	EU Speed 45 km/h
	Handlebar Horn Switch	W589997	1	
8	Horn Mounting Bracket	W1040588	1	
9	M5 Lock Nut	n/a	1	
10	M5x20mm Bolt	n/a	1	
11	M4 Washer	n/a	1	
12	M4x10mm T20 Bolt	n/a	1	
13	M3x10mm Bolt	W593445	2	
14	Charge Port Door		1	
15	M3x10mm Countersunk Bolt	580067	2	
16	Cable Guide Clamp		2	
17	Headtube Cable Guide	W562775	2	
18	M3x12mm Bolt	W524884	2	
19	Range Boost DT Plug	W581453	1	

TREK

Product Support

MY20 Allant+ Alloy Parts Quick Reference

Item	Description	Part Number	Qty	Note
1	Rear Rack	W579467	1	
2	Rear Fender	593522	1	
3	M6x14mm Countersunk Bolt	W579467	2	Torque 5Nm
4	M6 Washer		2	
5	M6 Lock Nut		2	
6	6mm Fender-Seatstay Spacer	W582895	1	
7	Fender Slot Cover	W581645	1	
8	5.5mm Washer		1	
9	M4x8.25mm Bolt		1	
10	M2x5mm Screw	W579384	2	
11	Fender “Nose”		1	
12	Wire Cover	W581644	1	

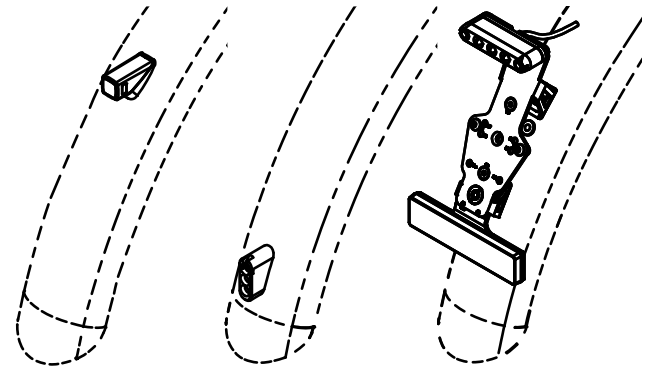

W564558 W544077 W543228

Description	Part Number	Qty	Note
Tail Light	W564558	1	US
	W544077		EU
	W543228		EU Speed 45 km/h

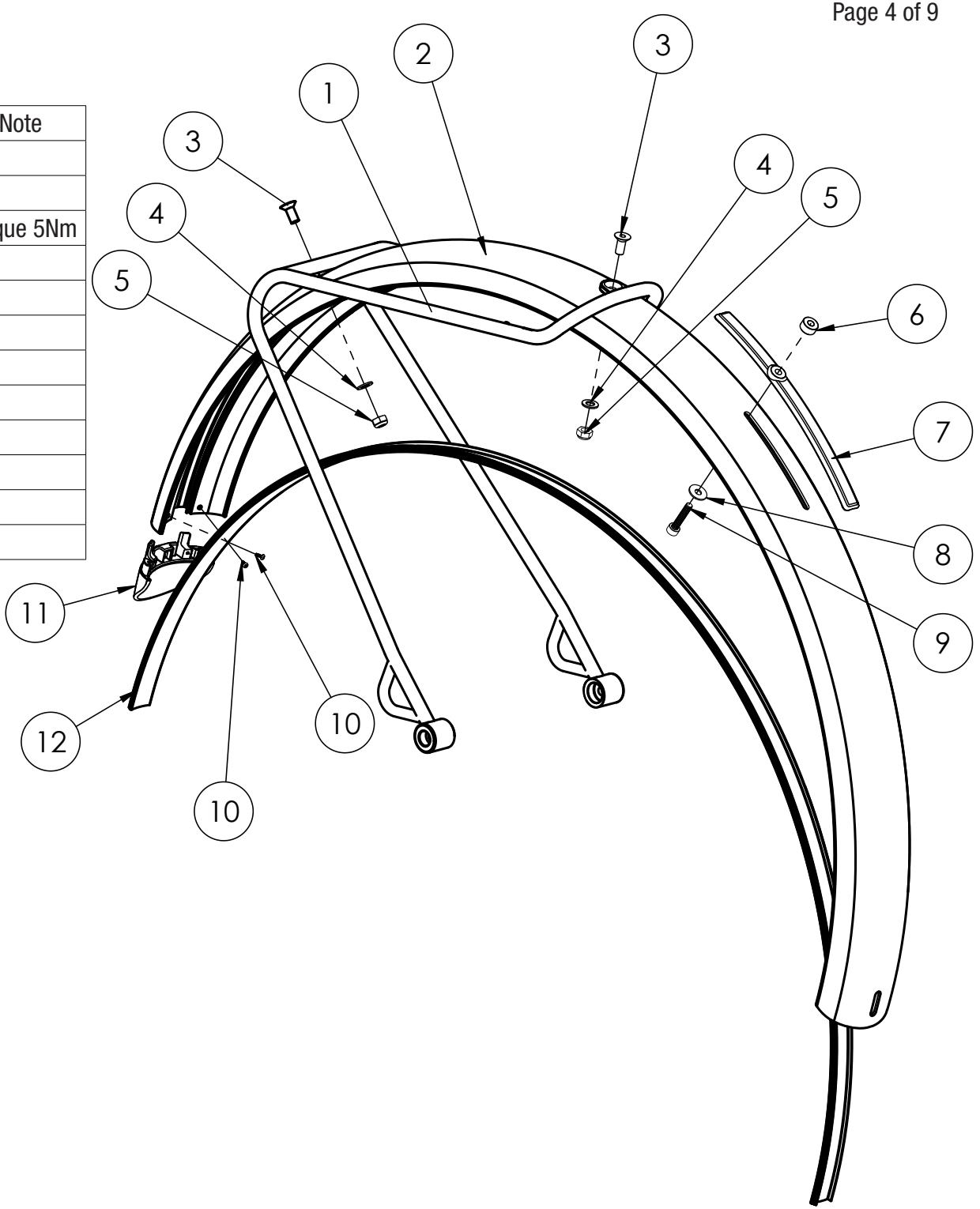

Product Support

MY20 Allant+ Alloy Parts Quick Reference



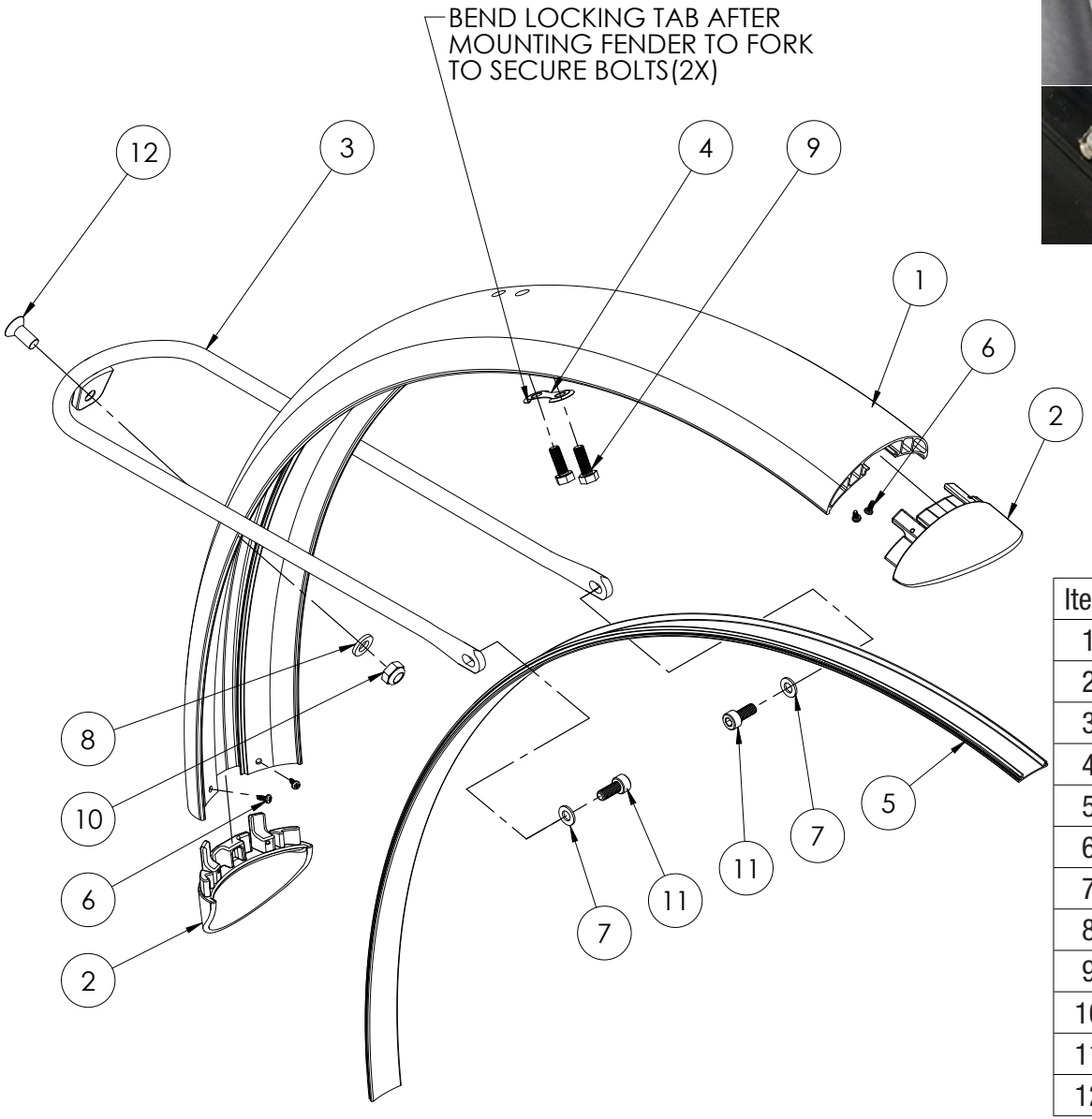

Item	Description	Part Number	Qty	Note
1	Front Fender	593520	1	
2	Fender “Nose”	W579384	2	
3	Fender Stay	W602230	1	
4	Locking Tab	W583811	1	
5	Wire Cover	W582941	1	
6	M2.5x5mm Bolt	W579384	4	
7	M5 Washer	W602230	2	
8	M6 Washer	W602230	1	
9	M5x14mm Bolt w/ Threadlock	W584856	2	Torque 4Nm
10	M6 Locknut	W602230	1	
11	M5x12mm Bolt w/ Threadlock	W602230	2	Torque 4Nm
12	M6x14mm Countersunk Bolt	W602230	1	Torque 5Nm

Product Support

MY20 Allant+ Alloy Parts Quick Reference

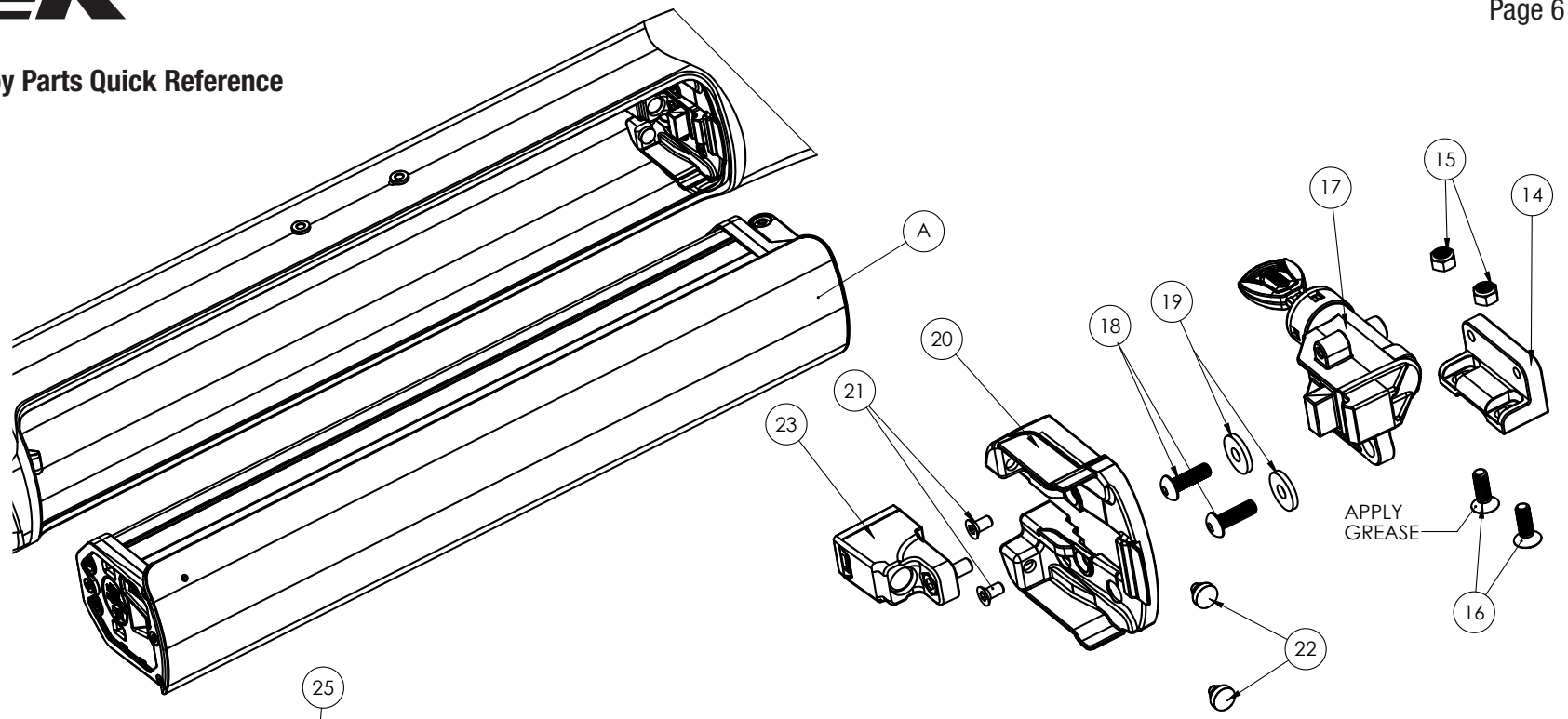

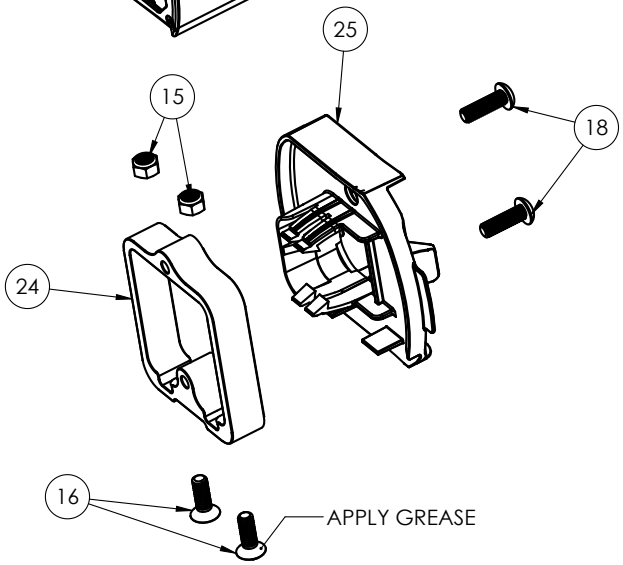

Item	Description	Part Number	Qty	Note
A	Battery Assembly	See Next Page		
14	Upper Frame Bracket	580066	1	
15	M5 Locking Nut	599883	4	
16	M5x15mm T25 Security Torx	599883	4	Torque 5Nm, Apply Grease to Head
17	ABUS Lock Core	W562311	1	
18	M5x16mm Bolt	579247	4	Torque 5Nm
19	15x5.3x2mm Washer	579247	2	
20	Upper Docking Bracket	584097	1	
21	M4x8mm Bolt	579247	2	Torque 2Nm
22	Battery Bumper	584097	2	
23	Ejector Assembly	579324	1	Torque 5Nm
24	Lower Frame Bracket	580066	1	
25	Lower Docking Bracket	584097	1	

Product Support

MY20 Allant+ Alloy Parts Quick Reference

Item	Description	Part Number	Note
A	RIB Battery Cover	593639	Gloss Rage Red
		593640	Matte Metallic Gunmetal
		600361	Matte Dnister Black
		600362	Gloss Nautical Navy
		600363	Matte Quicksilver

Item	Description	Part Number	Qty	Note
B	Handle Assembly	572657	1	
C	Spring Cap	572657	1	
D	Battery Handle Spring	W577275	1	
E	M4x8mm Bolt	579092	6	Torque 2.4Nm
F	Lower Battery Cover	W555588	1	
G	M3x20mm Bolt	579092	4	
H	500W RIB Spacer	W582323	1	
I	M4x12mm Bolts	W582323	4	Torque 2.4Nm
J	12x4x1mm Washer	n/a	4	

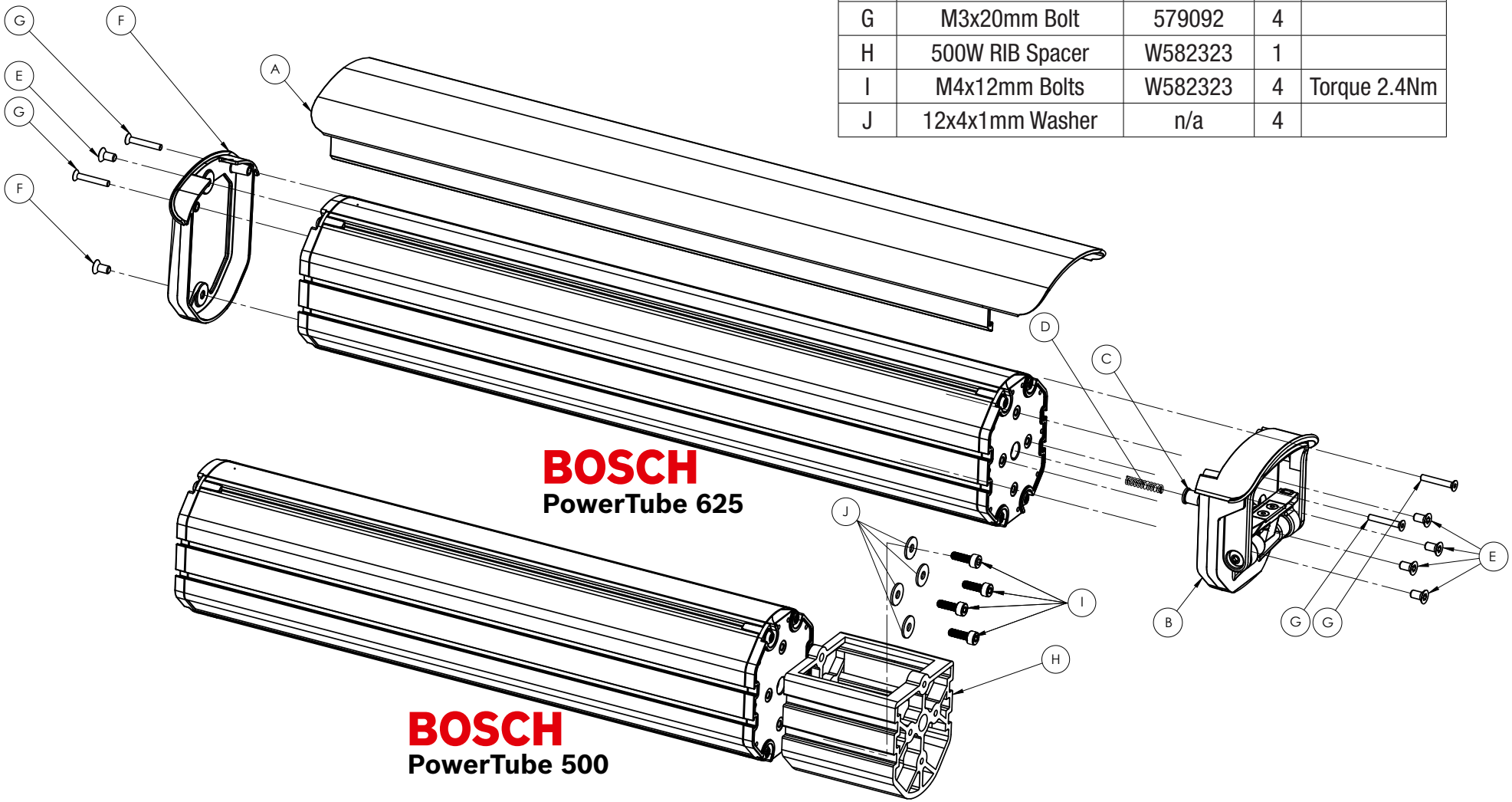

Product Support

MY20 Allant+ Alloy Parts Quick Reference

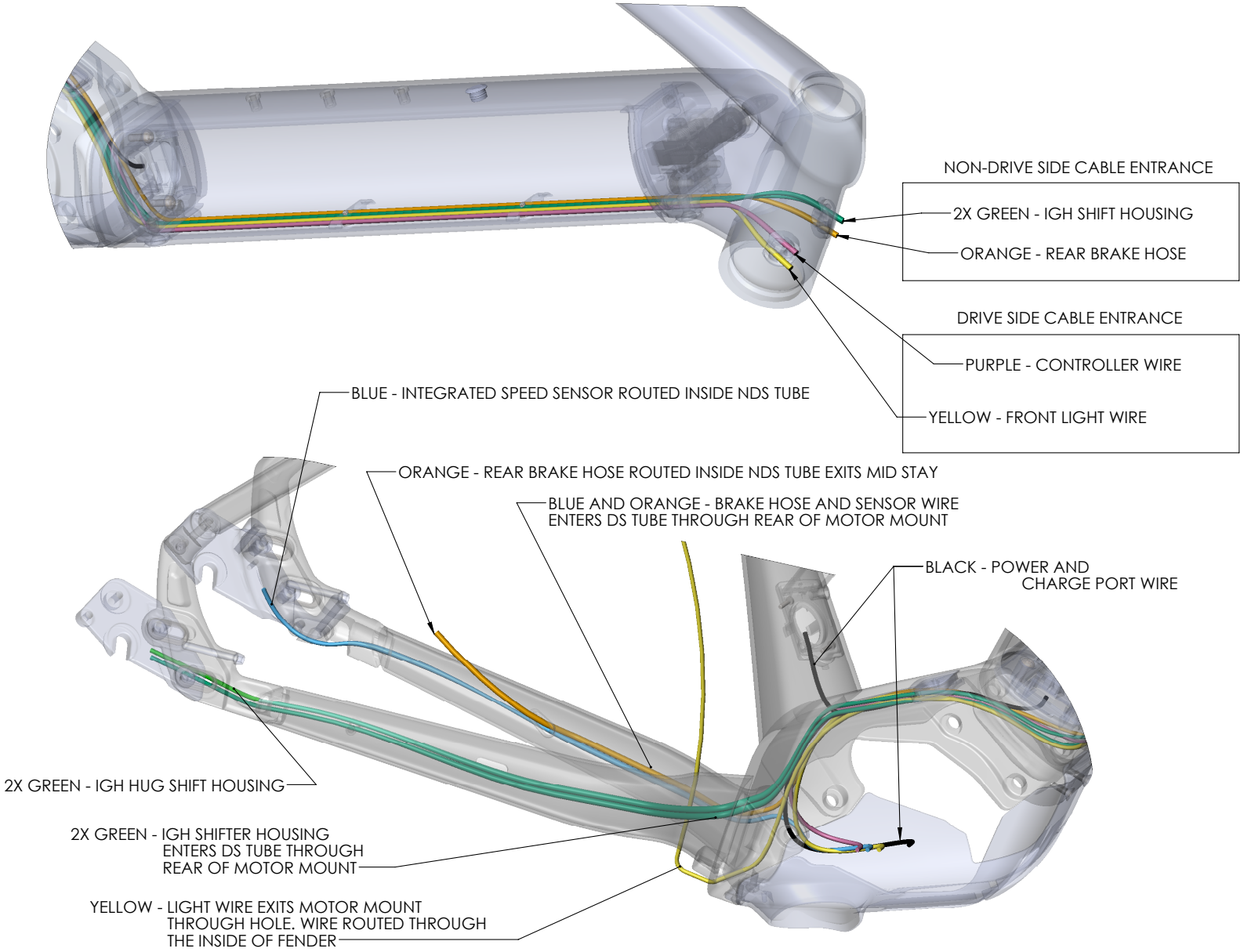

Product Support

MY20 Allant+ Alloy Parts Quick Reference

