OWNER'S MANUAL

ELECTRIC BICYCLE

EN-US

epowered by

BOSCH

The Smart System (28 mph)

TREK

IT IS IMPORTANT TO READ THE WARNINGS AND INSTRUCTIONS IN THIS MANUAL BEFORE RIDING YOUR NEW BICYCLE.

WELCOME

Welcome to our bike family
Thank you for purchasing your new bike.

We believe in bikes. We make high quality bikes that are built to last.
That is why each bike we make comes with a limited lifetime warranty.
We wish you many carefree and enjoyable cycling kilometers with your new bike!

However, if you experience any problems with your bike, do not hesitate to contact your local retailer.
If the problem persists, please call our customer service for a solution.

CONTENTS

Welcome 2

Important to read before the first ride 4
Additional information for 'Fast electric bicycles' 7

The Smart System (28 mph / 45 kmh) 9

Controllers
Intuvia 200 27
Purion 200 43
Purion 400 69
Kiox 300 | 500 85
Kiox 400C | Mini Remote | Mini Remote Dropbar 103
System Controller | Mini Remote | Mini Remote Dropbar 133
LED Remote 159
LED Controller 181
Display mount 203
Smartphone Grip 215
Smartphone Grip Vertical 231

Drive units
Hub line 247
Performance Line SX | Performance Line Spint 263
Active Line | Active Line Plus | Performance Line | Performance Line Sport 277
Active Line Plus | Performance Line | Performance Line PX | Performance Line Sport 291
Performance Line CX | Speed | CX-R | Cargo Line 305

Batteries
CompactTube 400
PowerTube 360 | 500 | 540 | 600 | 625 | 720 | 750 | 800
PowerPack Frame 400 | 540 | 800 319
PowerMore 250 349

Miscellaneous
2A Charger | 4A Charger 369
12A Charger 387
Bosch eBike ABS 405
eShift 421
ConnectModule 427
Component Connector 439

Contact 445

IMPORTANT TO READ BEFORE THE FIRST RIDE

US Customer: Supplemental Product Information

The most important points for you to do

1. Even if you have ridden a bicycle for years, it is important for every person to read the general "Bicycle Owner's manual" and the specific "Electric Bicycle Owner's manual" carefully before you ride on the new electric bicycle.

- Both manuals contains detailed information and useful suggestions about your new bicycle.
- Make sure that you understand the proper use, maintenance, and disposal of the components of the electrical system of your new electric bicycle.

2. Think about safety. Your safety and that of other road users is very important.

- Do not ride the electric bicycle without the battery. The battery must be on the bicycle while riding, else the bicycle has no lights when needed.
- Check your bicycle for normal operation, loose parts and defects before riding. If you find any problem, visit your bicycle dealer for repairs before riding.
- Be aware that other road users (cars, trucks, motorcycles) do not expect that an electric bicycle can ride faster than a normal bicycle. Riding faster also increases the risk of accidents.
  Distances will close much faster, and braking distances will become longer.
- Do not ride abusively. Only ride in the use conditions specified for your bicycle:
  - Electric City/Trekking bicycles are approved for Condition 1 (paved roads with tires staying on the ground).
  - Electric Mountain bicycles are approved for Condition 3 (rougher surfaces, jumps of not more than 24 in (61 cm)).

  Please refer to the general Bicycle Owner's manual for more detailed information.
- Do not overload the rear rack. The maximum allowable weight for the rear rack on electric bicycles is 44 lb (20 kg) for bicycles with a rear rack battery and 55 lb (25 kg) for bicycles with a down tube battery. On bicycles with a luggage rack at both sides of the rear fender only, without a top deck, the maximum allowed load on the rack is 33 lb (15 kg) in total.

3. The electric system of your new bicycle needs special attention.

- Do not clean your electric bicycle with a high pressure washer. Any electrical system is sensitive to moisture. High pressure water might enter connectors or other parts of the electric system.
- Handle your battery with care. Do not drop or impact the battery. Mishandling of the battery could lead to severe damage or over-heating. In an extremely rare case, a battery that has been severely impacted or otherwise mishandled could potentially catch fire.
  If you suspect damage to your battery, visit your dealer immediately for inspection.

4. Maintain the battery as instructed in this Bicycle Owner's manual.

Failure to follow these instructions may result in damage to your battery and may require battery replacement:

- Only charge the battery with the included Bosch charger.
- When not using the battery for a longer period, charge it to approximately 60% (three to four LEDs lit on the charge-control indicator). Check the charge condition after six months. When only one LED of the charge-control indicator lights up, recharge the battery again to approximately 60%.
- Once charging the battery is complete, unplug the battery from the charger and unplug the charger from the wall socket.
- A Li-Ion battery will self-discharge over time. If the battery is left uncharged, then stored without charging, it may discharge to such a low state that the battery can no longer be charged and must be replaced.
- Store the battery in a dry, well-ventilated location. Protect the battery against moisture and water.
- Under unfavorable weather conditions, it is recommended e.g. to remove the battery from the bicycle and store it in a protected location.
- The battery can be stored at temperatures between 14°F (-10°C) and 140°F (+60°C). For a long battery life, however, it is best to store the battery at room temperature of approximately 68°F (20°C) is of advantage.
- If the bicycle is not ridden for an extended time, do not store the battery on the bicycle.

5. Be careful when transporting an electric bicycle.

- An electric bicycle is heavier than a normal bicycle. If transporting on a vehicle, be aware of the maximum load capacity of the vehicle's roof, towing hook and/or the bicycle carrier. Refer to the manuals of the vehicle and bicycle carrier for details.
- Remove the controller (if removable), and battery and, if present, panniers from the bicycle and store them elsewhere in the vehicle during the drive.
- Always respect local laws about transportation of an electric bicycle.
- Because Li-Ion batteries of this size and power are considered 'Dangerous goods, class 9' when transporting, regulations may restrict the transport of separate Li-Ion batteries in some places. The restrictions apply to most airlines and some trucking companies. If you intend to ship or travel with your electric bicycle (with installed battery), check with the airline or carrier and local regulations about traveling with a Li-Ion battery.

6. Obey local regulations.

In most countries the regulations for the use of an electric bicycle are the same as those for a standard bicycle. However, there may be local differences such as where you can ride, minimum rider age, or required equipment and registration. It is the rider's responsibility to know the local regulations that apply to an electric bicycle and to obey them.

7. Mounting accessories on an e-bike.

An electric bike has hidden wiring through frame and has other critical e-bike parts like the drive unit and battery pack. When mounting accessories (e.g. a bottle cage), be sure not to impact the wiring or battery pack, e.g. by using too long or pointed bolts. This might cause a short circuit to the electric system and/or damage to the battery.

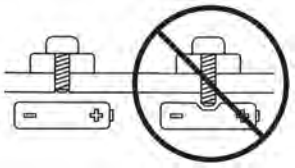

⚠ ***Warning. A short circuit in the electric system and/or damage to the battery might lead to over-heating. In an extremely rare case, a battery pack that has been severely impacted could potentially catch fire.***

8. Visit your dealer on a regular basis for maintenance of your new bicycle.

- Your dealer has the right knowledge and equipment to maintain your e-bike and to mount accessories safely.
- If you have questions about your new electric bicycle, ask your dealer!

Limited warranty

Your bicycle is covered by a Lifetime Limited Warranty. Please visit our web site for details.

Additional information for 'Fast electric bicycles'

The 'Fast Electric Bicycle' is an electric bicycle that provides additional assistance at speeds up to 28 mph so long as the rider keeps pedaling. This is higher than the assisted speed provided by a standard electric bicycle (20 mph).

Note.
The maximum speed depends on how hard you pedal, and whether you are descending on a decline.

Local Regulations
The regulations that cover use of a Fast Electric Bicycle vary by country, state, and even municipality in certain locations. You must comply with the local regulations that concern the minimum age of the rider, driver license, insurance, license plate, traffic and maximum speed regulations, and any other regulations.
The regulations may change at any time. It is the rider's responsibility to obey the regulations that apply to a Fast Electric Bicycle.

Note.
Wearing a helmet might not be mandatory in your location, but for your own safety, we strongly recommend wearing a helmet.

How long does a charge last?
The maximum range on one battery charge depends on your style of use and the environment where the Fast Electric Bicycle is used. The faster you go under motor power, the shorter the range.

How fast can I go?
Your Fast Electric Bicycle is still a bicycle. This bicycle does not have a throttle. Unless you have the "Walk-Assist" mode, you must be pedaling to use the power of the assist system.

Other road users may not expect a bicycle to be ridden at the speed of a Fast Electric Bicycle.
In traffic and crowded areas, ride at a safe speed.
Obey all traffic regulations as defined by the regulations for your area.

The smart system (28 mph / 45 kmh)



en Original operating instructions

This manual contains important safety, performance and service information. Read and understand it along with the information provided to you by your bicycle manufacturer before using the product, and keep it for reference.

Drive Unit

BDU314Y
BDU338Y
BDU347Y
BDU378Y
BDU388Y

Display

BHU3200
BHU3210
BHU3500
BHU3600
BHU3700

ConnectModule

BCM3100
BCM3101

Display Mount

BDS3210
BDS3250
BDS3620
BDS3630

Control Unit

BRC3100
BRC3200
BRC33YY
BRC3600
BRC3610
BRC3800

Battery

BBP3248
BBP3548
BBP3558
BBP3588
BBP362Y
BBP375Y
BBP376Y
BBP377Y
BBP3835
BBP385Y
BBP3865
BBP387Y
BBP388Y

Charger

BPC3200 (NZ)
BPC3210 (USA)
BPC3400 (NZ)
BPC3410 (USA)
BPC3041

HMI Cable

BCH36YY

Table of Contents

Introduction 2
About Warnings 2
General Warnings 2
IMPORTANT SAFETY INSTRUCTIONS – SAVE THESE INSTRUCTIONS 3
Using Your Operator's Manual 4
Bosch Drive System Overview 5
Bicycle View (PowerTube) 5
Bicycle View (PowerPack Frame) 6
Bicycle View (PowerMore) 7
Operating your Bosch Drive System 8
Getting Ready to Ride 8
Safe Start-up Procedure 10
Notes on cycling with the eBike system 11
Transport 12
Maintenance/Cleaning 12
Recycling Program 14

Introduction

Thank You for Purchasing a Bosch Drive System Equipped Bicycle!

Your Bosch eBike Systems team appreciates having you as a customer and wishes you many years of safe and satisfied use of your bicycle.

Some content is published under license from the **PeopleForBikes Coalition, LTD**.

About Warnings

This manual contains many **DANGER**, **WARNING** and **CAUTION** indicators concerning the consequences of failure to use, assemble, maintain, store, inspect and dispose of a Bosch-equipped eBike in a safe manner.

- The combination of the safety alert symbol and the word **DANGER** indicates a hazardous situation that, if not avoided, will result in death or serious injury.
- The combination of the safety alert symbol and the word **WARNING** indicates a hazardous situation that, if not avoided, could result in death or serious injury.
- The combination of the safety alert symbol and the word **CAUTION** indicates a hazardous situation that, if not avoided, could result in minor or moderate injury.

General Warnings



Read all safety warnings and all instructions. Failure to follow the warnings and instructions may result in death, property damage or serious injury.

Save all safety warnings and instructions for future reference.

The term **eBike battery** used in these operating instructions refers to all original Bosch eBike batteries from the system generation **the smart system**.

Riders and passengers must be aware of and follow all applicable rules and regulations related to the operation or use of eBikes in their local jurisdiction when operating or otherwise using this product. This eBike system has the capability to provide pedal assistance up to 28 mph (45 km/h). Riders must have the reaction, capabilities, experience, maturity, coordination and ability to control a bike at such speed, and to manage traffic, road conditions, inclement weather, carrying passengers or cargo and sudden situations, and also to respect the laws and instructions governing bicycle use. In addition, some jurisdictions may set a minimum age for the rider and passenger of this eBike. Please check your local jurisdiction for any applicable legal requirements and restrictions.

⚠ WARNING

- ▶ **This manual contains important safety, performance and service information.** Read it before you take the first ride on your new bicycle, and keep it for reference. The manual can also be found online at www.bosch-ebike.com.
- ▶ **This manual is intended to be read together with the separate user manual provided with your bicycle.** Be sure to read all provided documents including labels on the product before your first ride.
- ▶ **Read ALL accompanying manuals before riding the bike for the first time.** Your Bosch Drive System comes with additional manuals and documents provided by the manufacturer of the bicycle and other components. Failure to read and understand safety information can result in death or serious injury.

- **Take responsibility for your own SAFETY.** If you have any questions or do not understand something, consult with your dealer or the bicycle or component manufacturer.
- **Some eBike accessories may present a choking hazard to small children.** Keep these accessories away from children.

⚠ CAUTION

- **The Bosch Drive System adds weight to your bicycle which you may not be used to lift.** Avoid injury, use proper lifting techniques.

IMPORTANT SAFETY INSTRUCTIONS – SAVE THESE INSTRUCTIONS

⚠ WARNING

- **When using the Drive System basic precautions should always be followed, including the following:**
- **Read all the instructions before using the Drive System.**
- **To reduce the risk of injury, close supervision is necessary when the Drive System is used near children.**
- **Do not put fingers or hands into the Drive System.**
- **Do not use the Drive System if the flexible power cord or output cable is frayed, has broken insulation, or any other signs of damage.**
- **The Drive System is not intended to be used at ambient temperatures less than 0 degrees C (+32 degrees F) or above ambient temperatures of 40 degrees C (+104 degrees F).**
- **The battery is intended to be charged when the ambient temperature is between 0 degrees C (+32 degrees F) and 40 degrees C (+104 degrees F).** Never charge the battery when ambient temperatures are outside this range.

Using Your Operator’s Manual

Your operator's manual consists of several parts:
- Operating instructions for the Bosch eBike system (this manual)
- Operating instructions for the drive unit
- Operating instructions for the display
- Operating instructions for the display holder
- Operating instructions for the control unit
- Operating instructions for the charger
- Operating instructions for the eBike battery
- Operating instructions for ConnectModule

▶ **Read and observe the safety warnings and instructions in all operating instructions of the eBike components and your eBike.**

▶ **It is recommended that you periodically review this information to ensure you are following all recommendations for safe use of this product.**

▶ **Ownership, operation, charging and maintenance of an eBike involve certain risks and hazards, which can be minimized by following safe practices addressed in this Manual.** Your knowledge of and adherence to those practices are essential to your safety, the safety of others, and the protection of property, including your eBike.

Graphics

The bicycle shown in this manual may differ slightly from your bicycle, but will be similar enough to help you understand our instructions.

RIGHT-HAND and LEFT-HAND sides are determined by facing in the direction the bicycle will travel when going forward. When you see a broken line (------), the item referred to is hidden from view.

Bosch Drive System Overview

Bicycle View (PowerTube)

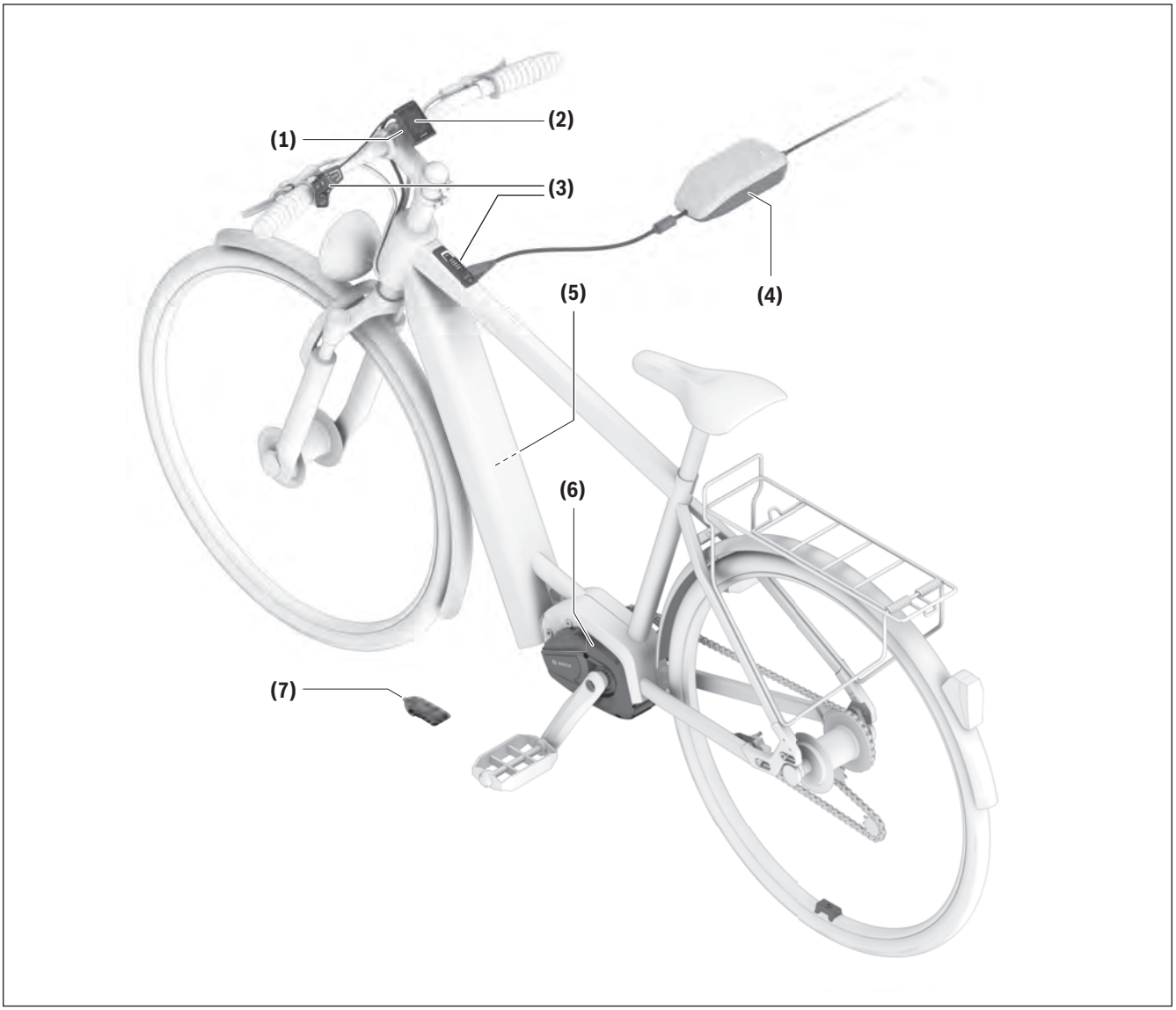

Bosch Drive System Components

All representations of bike components are schematic and can deviate from your eBike.

(1) Display holder
(2) Display
(3) Control unit
(4) Charger
(5) Frame-mounted battery "PowerTube"/"CompactTube"
(6) Drive unit
(7) ConnectModule

Bicycle View (PowerPack Frame)

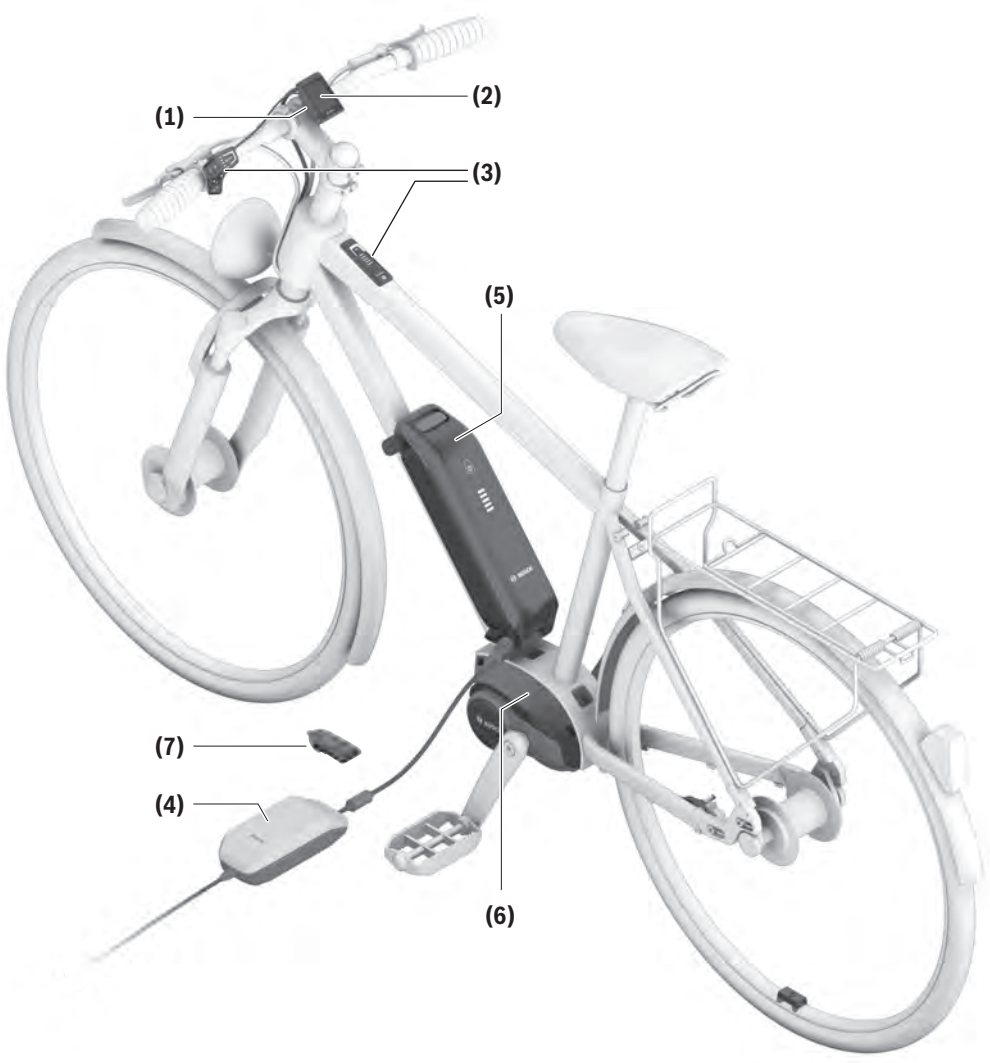

Bosch Drive System Components

All representations of bike components are schematic and can deviate from your eBike.

(1) Display holder
(2) Display
(3) Control unit
(4) Charger
(5) Frame-mounted battery "PowerPack"
(6) Drive unit
(7) ConnectModule

Bicycle View (PowerMore)

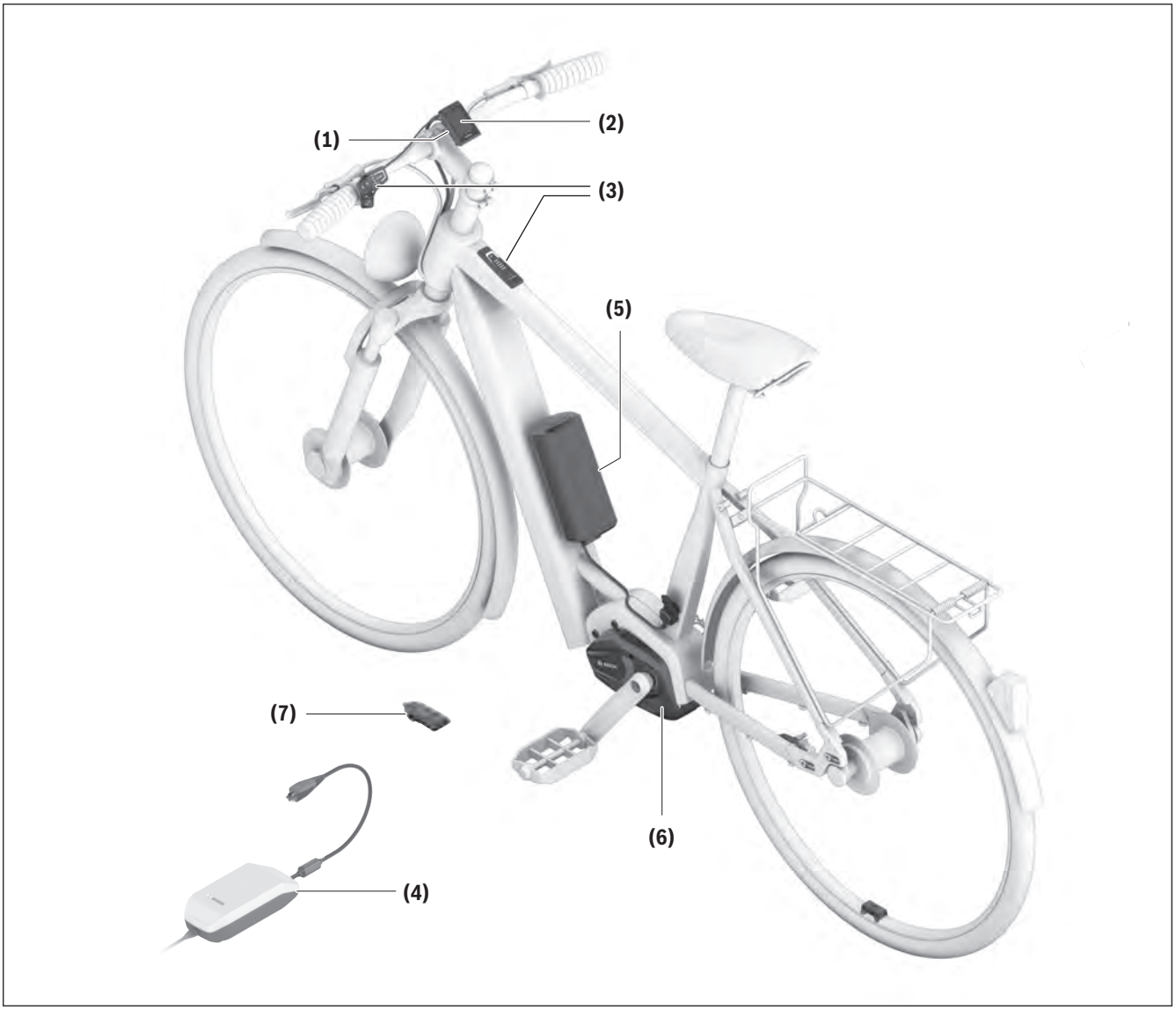

Bosch Drive System Components

All representations of bike components are schematic and can deviate from your eBike.

(1) Display holder
(2) Display
(3) Control unit
(4) Charger
(5) Frame-mounted battery "PowerMore"
(6) Drive unit
(7) ConnectModule

Operating your Bosch Drive System

Getting Ready to Ride

Read and understand all safety warnings and instructions. Failure to follow the below warnings could result in death or serious injury.

- ▶ **Protect others from death or serious injury. Prevent unauthorized use.** Always remove battery from the bicycle when not in use and store in a secure location. Failure to secure your bicycle from unauthorized use can result in death or serious injury to others.
- ▶ **Never loan your eBike to another person or let another person operate your eBike unless they are familiar with the instructions and warnings in this Manual and competent to operate an eBike.** Allowing a person to operate an eBike who lacks the knowledge or ability to safely do so may result in serious injury or death.
- ▶ **Read and understand the influences on the operating range planning your ride** (see "Influences on range", page English – 11).

Before your first ride

Check your bicycle owner's manual for important information about the bike components, such as the brakes, pedals, gears, gear shifting, etc.

⚠ WARNING

- ▶ **If you have an impairment or disability such as a visual impairment, hearing impairment, physical impairment, cognitive/language impairment, or a seizure disorder, consult your physician before using this product.**
- ▶ **To reduce the risk of serious injury related to exercise, take the following precautions before use: Do not overexert yourself.** Use of the Bosch Drive System requires varying amounts of physical activity.

Consult a doctor before using the device if you have any medical condition or issue that affects your ability to safely perform physical activities, or if you:

- – are or may be pregnant
- – have heart, respiratory, back, joint, or other orthopedic conditions
- – have high blood pressure
- – have difficulty with physical exercise
- – have been instructed to restrict physical activity

- ▶ **Wearing a helmet can prevent a severe head injury. Whenever riding, rider and passenger must always wear a helmet that meets or exceeds established safety standards.** Approved helmets in the USA must meet the US Consumer Product Safety Commission standard, so look for a CPSC reference.
- ▶ **Riding a Bosch drive system equipped bicycle capable of speeds up to 28 mph (45 km/h) requires proficiency in the activity of road cycling.** eBikes are heavier, accelerate faster, can achieve higher speeds more quickly and maintain those speeds for longer periods of time compared to regular bicycles. These features can dramatically affect the handling, braking and cornering of your eBike, which means you must exercise more caution around other people and when cornering, accelerating and slowing down. Higher speed results in higher forces if a crash occurs. Control your bicycle at all times. Your risk of death or serious injury increases with both speed and age.

The following is required for safe use of this product:

- – Knowledge of the laws/safety guidelines/rules of road cycling (riding safely)
- – Ability to operate and control a standard road bike
- – Experienced rider who is actively riding
- – Capable, comfortable and confident riding safely at speed up to 28 mph (45 km/h)

– Your bike should match your riding style, be properly adapted to the dimensions of your body, and be well maintained.

▶ **Do not use this product under the influence of drugs and/or alcohol.**

⚠ WARNING

▶ **While riding, do not become distracted by the display and always remain alert to all riding conditions.** The display should only be used in a stationary and safe start-up position. Utilize the control unit to change motor assistance levels while riding.

▶ **Check your bicycle manual for maximum riding weight of your bicycle.** Overloading your bicycle can result in component failure which can result in death or serious injury. Typically maximum riding weight is defined by the sum of the rider's weight plus the weight of any luggage and/or passenger.

▶ **In addition to reading and understandings your owner's manuals, be sure you know or refamiliarize yourself with local laws prior to using this product.** Consult your bicycle dealer, local library, bookstore to choose the learning resource best for you.

▶ **Some eBikes may not be suitable for some children.** Consult the documentation provided by the manufacturer of your eBike for any information about age recommendations or restrictions. Parents must ultimately be responsible to determine whether their child is physically, mentally and emotionally capable of safely operating an eBike, including understanding and following all warnings and instructions in this Manual. Allowing a child who lacks the capability to safely operate an eBike to do so may lead to a crash resulting in serious personal injury or death.

▶ **Some states have age restrictions for transporting passengers.** A child must be of age to ride an eBike independently, or be of age as specified by the manufacturer to be a passenger on an eBike, unless the child is in an approved child carrier that has been properly fitted. Transporting a child that does not meet the age/physical requirements to be a passenger and/or is not in an approved child carrier can result in serious personal injury or death.

▶ **Do not modify or alter your eBike, or install additional equipment with the intention of increasing the performance and/or top speed of the eBike.** Modifying an eBike to increase its performance or speed may be unlawful and can result in component failure or a loss of control, leading to a crash resulting in serious injury or death. A modified eBike may no longer be regulated as an eBike, placing the operator at risk of personal liability and criminal prosecution in the event of a crash. Any alterations can negatively affect the lifespan of the eBike and its components, and can result in damage to the drive system.

▶ **Components can reach very high temperatures during use, especially when the eBike is subjected to high loads at low speeds, resulting in poor air movement around the eBike.** For example, riding up a long, sustained hill, riding with a heavy load, or riding down a long hill with prolonged brake application, can result in one or more systems generating significant heat. Avoid touching any part of the battery housing, drive system or brake system with exposed skin (e.g., hands or legs). Contact with hot components can result in burns if touched.

Intended Use

⚠ WARNING

- ▶ **Understand your bike and its intended use by consulting your bicycle owner's manual.** Using your bike in an unintended manner can result in death or serious injury.
- ▶ **The Bosch Drive System components are intended exclusively for your eBike and must not be used for other purposes or vehicles.**

Your Bosch drive unit is not intended for towing another bicycle. For trailer towing, consult your bicycle owner's manual and trailer owner's manual for towing instructions and towing compatibility.

Safe Start-up Procedure

⚠ WARNING

- ▶ **Follow the safe start-up procedure below.** Failure to follow safe start-up procedure can result in death or serious injury.

Preparations

Before starting check the following:

– Check that you have unplugged the battery charger.
– Your battery pack is locked in place (Pull on the battery pack to ensure it is locked in place).
– Remove the battery pack key.

Start Riding

– Sit in the saddle with both feet touching the ground and two hands on the handlebars.
– Once you are in a stable position, switch on the eBike. The Bosch Drive System will always start up in **OFF** mode.
– Place both hands on the handlebars and begin pedaling.

Notes on cycling with the eBike system

When does the drive take effect?

The drive assists your cycling only when you are pedaling. If you do not pedal, the assistance will not work. The drive output always depends on the pedaling force and cadence that you apply.

If you apply less force or a lower cadence, you will receive less assistance than if you apply a lot of force or a higher cadence. This applies irrespective of the riding mode.

The drive automatically switches off at speeds over **28 mph (45 km/h)**. When the speed falls below **28 mph (45 km/h)**, the drive automatically becomes available again.

An exception applies to the walk assistance function, in which the eBike can be pushed at low speed without pedaling. The pedals may rotate when walk assistance is in use.

You can also use the eBike as a normal bicycle without assistance at any time, either by switching off the eBike or by setting the riding mode to **OFF**. The same applies when the eBike battery is drained.

Interaction of the drive unit with the gear-shifting

You should shift through gears on an eBike in the same manner as when using a normal bicycle (observe the operating instructions of your eBike with regard to this point).

Irrespective of the type of gear shifting, it is advisable that you briefly reduce the pressure on the pedals when changing gear. This will aid gear shifting and reduce wear on the powertrain.

By selecting the correct gear, you can increase your speed and range while applying the same amount of force.

Test the range of your eBike in different conditions before planning longer and more demanding trips.

- ▶ **Read and understand the influences on the operating range planning your ride** (see "Influences on range", page English – 11).

Influences on range

The range is affected by a number of factors, such as:

- Riding mode
- Speed
- Gear shifting behavior
- Tire type and tire pressure
- Age and condition of the eBike battery
- Route profile (gradients) and conditions (road surface)
- Headwind and ambient temperature
- Weight of eBike, rider, passenger, and luggage.

For this reason, it is not possible to predict the range accurately before and during a trip. However, as a general rule:

- With the **same** riding mode on the drive: The less energy you need to exert in order to reach a certain speed (e.g. by changing gears optimally), the less energy the drive will consume and the higher the range per battery charge will be.
- The **more powerful** the selected riding mode under otherwise constant conditions, the smaller the range will be.

Note: Plan your routes so that you can always reach your destination without drive assistance.

Transport

- **Always remove the battery pack (except fixed mount battery pack) from the bicycle before transporting the bicycle on a vehicle bike rack.** Failure to remove the battery pack when using a vehicle bike rack can lead to death or serious injury. The battery may detach during transport and cause an accident to following vehicles.
- **Always use an approved and compatible bicycle rack when transporting your eBike. The Bosch drive system adds weight to the bicycle.** Refer to your bicycle rack manual to be sure your eBike is compatible. Overloading a bike rack can result in death or serious injury.
- **Use proper lifting techniques as electric bikes are generally heavier than bicycles.**
- **If you transport your eBike attached to the outside of your car, e.g. on a bike rack, remove the display and the eBike battery (exception: Built-in eBike battery) to avoid damaging them.**

Maintenance/Cleaning

- **The drive system does not contain any user-serviceable parts. Do not attempt to open, disassemble, modify, adjust or service any parts of the drive system components. Any tampering with the internals of the motor, battery or other drive system components can result in damage, which can cause serious injury or death. eBike service and repair tasks require special knowledge and tools. Service and repair should only be carried out at an authorized Bosch eBike dealer.** Failure to follow above warning can cause death or serious injury. Refer to your bicycle manual or component manual for all non-Bosch drive system components.
- **Always remove the battery pack before performing any bicycle inspection, maintenance or repair.** Failure to remove the battery pack before performing bicycle inspection, maintenance or repair can lead to serious injury.
- **If you suspect that something is loose, do not ride your bike.** See your Bosch eBike dealer, only a qualified service provider should perform work on your Bosch Drive System. All nuts, bolts, screws require the correct tightening force. Too little force and the fastener may not hold securely. Too much force and the fastener can strip threads, stretch, deform or break. Either way, incorrect tightening force can result in component failure, which can cause you to lose control and fall.
- **If replacing your battery, buy only a genuine Bosch battery pack from an approved source. See your Bosch eBike dealer for original Bosch parts.**
- **Always switch the battery pack off, when inserting or removing it from the holder.** Never attempt to insert or remove the battery pack while riding the bike.
- **Do not charge or use your eBike in any area with a potentially explosive atmosphere, such as at a fueling area, or in areas where the air contains chemicals or particles (such as grain, dust, or metal powders).** Obey all signs and instructions.
- **Do not expose the drive system to excessive water. Never fully submerge the drive system or use a pressure-washer to clean your eBike.** Exposure of the battery or internal components of the drive system to water can result in serious damage to the system components.
- **Note down the manufacturer and the number of the key.** In case of loss of the keys, please refer to an authorised Bosch eBike dealer. Please provide the name of the manufacturer and the number of the key.
- **Do not apply any cleaning agents, paint or chemicals to any components of the Bosch drive sys-**

tem as they may cause premature failure of the component.

- **Remove the eBike battery from the eBike before beginning work (e.g. inspection, repair, assembly, maintenance, work on the chain, etc.) on the eBike. When working on permanently installed eBike batteries, take particular care to ensure that the eBike cannot be switched on.** Unintentional activation of the eBike poses a risk of injury.
- **During periodic inspections, also inspect the battery terminals for any signs of corrosion. Also inspect any visible wiring.** Frayed or otherwise damaged wires, loose or corroded plugs, or bad connections can result in damage to the drive system and should be inspected and replaced as necessary by your authorized Bosch eBike dealer.

Taking care of your eBike

Please observe the operating and storage temperatures of the eBike components. Protect the drive unit, display, and eBike battery against extreme temperatures (e.g. from intense sunlight without adequate ventilation). Extreme temperatures can cause the components (especially the eBike battery) to become damaged.

Have your eBike checked by an expert at least once a year (including mechanical parts, up-to-dateness of system software).

Please have your eBike serviced and repaired by a service center.

- **Don't turn the eBike upside down onto the handlebars and seat.** This can result in damage to any handlebar-mounted display or controller components.
- **Like any mechanical device, an eBike and its components are subject to wear and stress.** Different materials and mechanisms wear or fatigue from stress at different rates and have different life cycles. If a component's life cycle is exceeded, the component can suddenly and catastrophically fail.
- **A crash or other impact can put extraordinary stress on bicycle components, causing them to fatigue prematurely.**

After-sales service and advice on using products

If you have any questions about the eBike and its components, contact a service center.

For contact details of service centers, please visit www.bosch-ebike.com.

Please contact a service center if the eBike battery is no longer working.

More information

More information and videos about the eBike components and their functions can be found in the Bosch eBike Help Center.

Cleaning

- **Do not submerge your eBike components in water, or wash with pressurized hose.** Your Bosch drive unit is designed to be water tight to rain water or non-pressure hose washing.
- **Dirt and salt from riding in winter or near the ocean, as well as sweat, can be damaging to bicycle components. This includes eBike drive system and wiring parts.** Regularly keep the eBike clean.

Keep all components of your eBike clean, especially the battery pack contacts and corresponding holder contacts. All components including the drive unit may not be immersed in water or cleaned with a high-pressure cleaner. Clean them carefully with a soft, damp cloth (using only mild soap and water).

Recycling Program



The individual eBike components as well as accessories and packaging should be recycled in an environmentally friendly manner.

Do not dispose of eBikes and their components with household waste.

Do not dispose of an eBike battery or any other Lithium- Ion battery in your regular household trash or a public trash receptacle. Batteries that enter the regular waste stream can be damaged, leading to a fire resulting in serious injury, death, property damage and environmental contamination.



You may recycle your Bosch battery pack by calling 1.800.822.8837.

Robert Bosch GmbH
72757 Reutlingen
Germany

www.bosch-ebike.com

kontakt@bosch.de

0 275 U07 3SS (2026.02) T / 48

Intuvia 200

BHU3210



en Original operating instructions

This manual contains important safety, performance and service information. Read and understand it along with the information provided to you by your bicycle manufacturer before using the product, and keep it for reference.

Table of Contents

Introduction 2
About Warnings 2
General Warnings 2
Using your Manual 3
Operating your Bosch Display 4
Safety instructions 4
Product Description and Specifications 6
Operation 8
Maintenance and servicing 12
Maintenance and cleaning 12
After-sales service and advice on using products 12
More information 12
Transport 12
Recycling Program 12

Introduction

About Warnings

This manual contains many **DANGER**, **WARNING**, and **CAUTION** indicators concerning the consequences of failure to use, assemble, maintain, store, inspect and dispose of a Bosch-equipped eBike in a safe manner.

– The combination of the safety alert symbol and the word **DANGER** indicates a hazardous situation that, if not avoided, will result in death or serious injury.
– The combination of the safety alert symbol and the word **WARNING** indicates a hazardous situation that, if not avoided, could result in death or serious injury.
– The combination of the safety alert symbol and the word **CAUTION** indicates a hazardous situation that, if not avoided, could result in minor or moderate injury.

General Warnings



Read all safety warnings and all instructions. Failure to follow the warnings and instructions may result in death or serious injury.

Save all safety warnings and instructions for future reference.

The term **eBike battery** used in these operating instructions refers to all original Bosch eBike batteries from the system generation **the smart system**.

▶ **Read ALL accompanying manuals before riding the bike for the first time.** Your Bosch Drive System comes with additional manuals and documents provided by the manufacturer of the bicycle and other components. Failure to read and understand safety information can result in death or serious injury.

⚠ WARNING

▶ **This manual contains important safety, performance and service information.** Read it before you take the first ride on your new bicycle, and keep it for reference. The manual can also be found online at www.bosch-ebike.com.

▶ **This manual is intended to be read together with the separate user manual provided with your bicycle.** Be sure to read all provided documents including labels on the product before your first ride.

▶ **Take responsibility for your own SAFETY.** If you have any questions or do not understand something, consult with your dealer or the bicycle or component manufacturer.

▶ **Some eBike accessories may present a choking hazard to small children.** Keep these accessories away from children.

⚠ CAUTION

▶ **The Bosch Drive System adds weight to your bicycle which you may not be used to lift.** Avoid injury, use proper lifting techniques.

Using your Manual

In addition to the functions outlined here, changes to software relating to troubleshooting and functional modifications may be introduced at any time.

Graphics

The bicycle shown in this manual may differ slightly from your bicycle, but will be similar enough to help you understand our instructions.

RIGHT-HAND and LEFT-HAND sides are determined by facing in the direction the bicycle will travel when going forward. When you see a broken line (------), the item referred to is hidden from view.

Operating your Bosch Display

Safety instructions



Read all the safety and general instructions. Failure to follow the warnings and instructions may result in electric shock, fire and/or serious injury.

Save all safety warnings and instructions for future reference.

The term **eBike battery** used in these operating instructions refers to all original Bosch eBike batteries from the system generation **the smart system**.

The terms **drive** and **drive unit** used in these operating instructions refer to all original Bosch drive units from the system generation **the smart system**.

- ▸ **Read and observe the safety warnings and instructions in all operating instructions of the eBike components and your eBike.**
- ▸ **Do not attempt to secure the display or control unit while riding.**
- ▸ **Do not allow yourself to be distracted by the display, particularly by text overlays shown according to the situation.** The display of riding information does not absolve the rider of the need to exercise due caution. If you do not focus exclusively on the traffic, you risk being involved in an accident. If you want to make entries in your display other than switching the riding mode, stop cycling and enter the relevant details.
- ▸ **Do not operate your smartphone during the journey.** If you do not concentrate exclusively on the traffic around you, you risk being involved in an accident. When using your smartphone, only enter the relevant data once you've stopped.
- ▸ **Set the display brightness such that you can adequately see important information like speed or warning symbols.** An incorrectly set display brightness can result in dangerous situations.
- ▸ **Do not open the display.** Opening the display can destroy it and void any warranty claims.
- ▸ **Do not use the display as a handle.** Lifting the eBike up by the display can cause irreparable damage to the display.
- ▸ **Do not stand your eBike upside down on its saddle and handlebars if the display or its holder protrude from the handlebars.** This may irreparably damage the display or the holder.
- ▸ **Do not enter information or make selections while riding.** Interacting with the display or control unit while riding can lead to accidents causing serious injury or death. You must observe road and traffic conditions, and comply with traffic laws at all times.
- ▸ **Accessing other apps, reading pop up messages/other content, or otherwise using your mobile device while operating an eBike may be distracting. Distracted driving is a serious safety concern and can lead to accidents causing serious injury or death. In order to prevent distracted driving, most mobile devices come equipped with a “Do Not Disturb” mode. The “Do Not Disturb” mode should be used while operating an eBike.** Please consult your device-specific instructions for more information. You, as the eBike operator, are fully responsible for ensuring that you pay attention to road conditions and comply with traffic laws at all times.
- ▸ Please note that certain State or local laws may require that class III eBikes must be equipped with a functioning speedometer that displays speed in miles per hour. Riders must be aware of any and all applicable rules and regulations related to the operation or use of class III eBikes in any applicable jurisdictions before operating or otherwise using this product.

NOTICE: This device complies with part 15 of the FCC Rules. Operation is subject to the following two conditions:

1. This device must not cause harmful interference, and
2. this device must accept any interference received, including interference that may cause undesired operation.

NOTICE: Changes or modifications made to this equipment not expressly approved by the Robert Bosch GmbH may void the FCC authorization to operate this equipment.

NOTE: This equipment has been tested and found to comply with the limits for a Class B digital device, pursuant to Part 15 of the FCC Rules. These limits are designed to provide reasonable protection against harmful interference in a residential installation. This equipment generates, uses and can radiate radio frequency energy and, if not installed and used in accordance with the instructions, may cause harmful interference to radio communications. However, there is no guarantee that interference will not occur in a particular installation. If this equipment does cause harmful interference to radio or television reception, which can be determined by turning the equipment off and on, the user is encouraged to try to correct the interference by one or more of the following measures:

- Reorient or relocate the receiving antenna.
- Increase the separation between the equipment and receiver.
- Connect the equipment into an outlet on a circuit different from that to which the receiver is connected.
- Consult the dealer or an experienced radio/TV technician for help.

CAN ICES3(B)/NMB3(B)
Responsible Party for North-America:
Bosch eBike Systems Americas
Robert Bosch LLC
27211 Burbank, Foothill Ranch, CA 92610, USA,
www.bosch-ebike.com/us/

Privacy notice

When connecting the eBike to the **DiagnosticTool 3** or when exchanging eBike components, technical information about your eBike (e.g. bicycle manufacturer, model, bike ID, configuration data) as well as regarding the use of the eBike (e.g. total travel time, energy consumption, temperature) is transmitted to Bosch eBike Systems (Robert Bosch GmbH) for processing your request, in service cases and for the purposes of product improvement. You can find further information about data processing at www.bosch-ebike.com/privacy-full.

Note: To improve readability, some values are displayed without decimal places. These values have been rounded up or down.

Product Description and Specifications

Product Features Intuvia 200

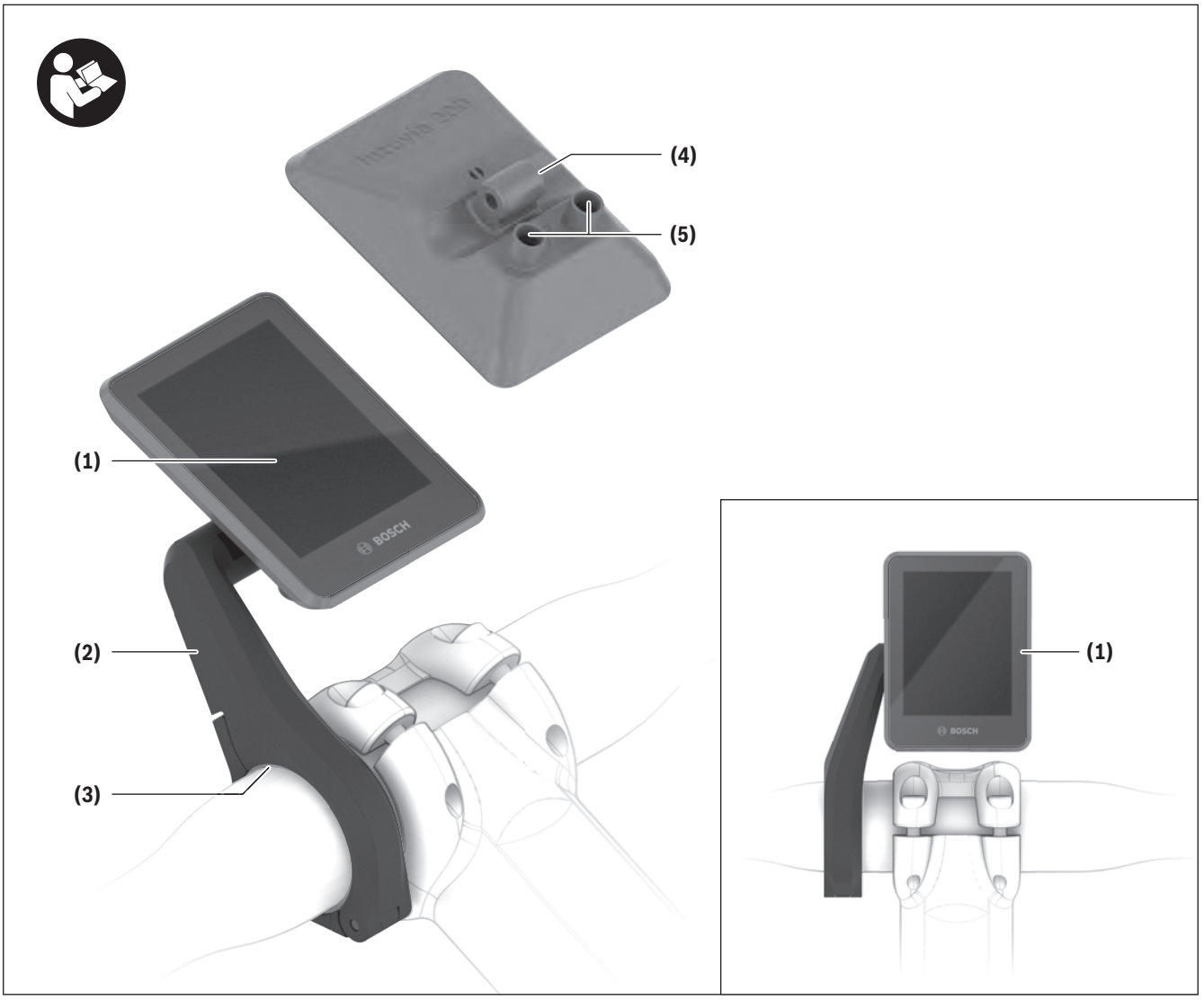

(1) Display
(2) Display holder
(3) Round rubber spacer
(4) Display hinge
(5) Cable connections

Intended use

The **Intuvia 200** display is designed to display ride data on an eBike from the system generation **the smart system**.

So as to be able to use the **Intuvia 200** display fully, a compatible smartphone with the **eBike Flow** app is required.



Depending on the operating system of the smartphone, the **eBike Flow** app can be downloaded free of charge from the Apple App Store or Google Play Store.

Scan the code with your smartphone to download the **eBike Flow** app.

Instructions on how to use the **eBike Flow** app and more detailed information can be found at www.bosch-ebike.com/help-center.

Technical Data

Display		Intuvia 200
Product code		BHU3210
Operating temperature[A)]	°F °C	+23 to +104 −5 to +40
Storage temperature	°F °C	+50 to +104 +10 to +40
Protection rating[B)]		IP55
Weight, approx.		
– Display	lbs g	0.09 40
– Holder (⌀ approx. 1.3 in [31.8 mm])	lbs g	0.06 28

A) Temperatures outside of this range may cause faults in the display.

B) Any connection sockets on the **Intuvia 200** display that are not being used must be sealed with a blind plug.

The license information for the product is available at the following Internet address: www.bosch-ebike.com/licences

Operation

Note about the protective film

- ▸ **Before first use, remove the protective film from the display in order to ensure the full functionality of the display.** If the protective film remains on the display, this can impair the functionality/performance of the display.

The display can be operated using one of the control units shown. The functions of the buttons on the control units can be found in the following overview.

Depending on how long it is pressed for, the select button has 2 functions.

5-button control unit

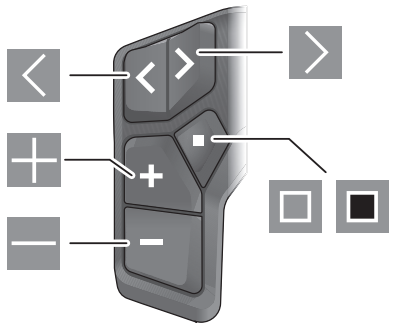

- Scroll to the left
- Scroll to the right
- Increase assistance level/scroll up
- Reduce assistance level/scroll down
- Select button (press briefly)
- Open quick menu (press and hold > 1 s)

5-button control unit

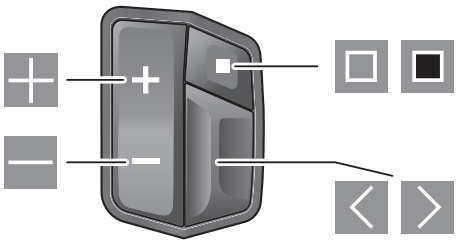

- / Toggle button: Scroll to the left/scroll to the right
- Increase assistance level/scroll up
- Reduce assistance level/scroll down
- Open the select button/settings menu (press briefly)
- Open quick menu (press and hold > 1 s)

3-button control unit

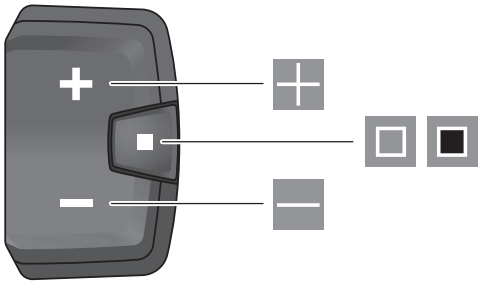

- Increase assistance level/scroll up
- Reduce assistance level/scroll down
- Select button/scroll through the tiles/riding data (press briefly)
- Select button/open menu (press and hold > 1 s)

Navigating in the Menus

Briefly press the button or the button to navigate in the menus.

Briefly press the select button to select the relevant menu item.

You can go back a level by pressing and holding (> 1 s) the select button .

Note: The information and fault codes can be acknowledged using the button on the control units shown.

Note: Improvements and added functionality are regularly introduced through software updates. There-

fore, the displays and functions shown here may differ from what is actually displayed.

Standard Screen

The indicators, depending on the eBike equipment, are specified in the upper area of the standard screen. You can scroll through various tiles/riding data **(h)** in the lower area.

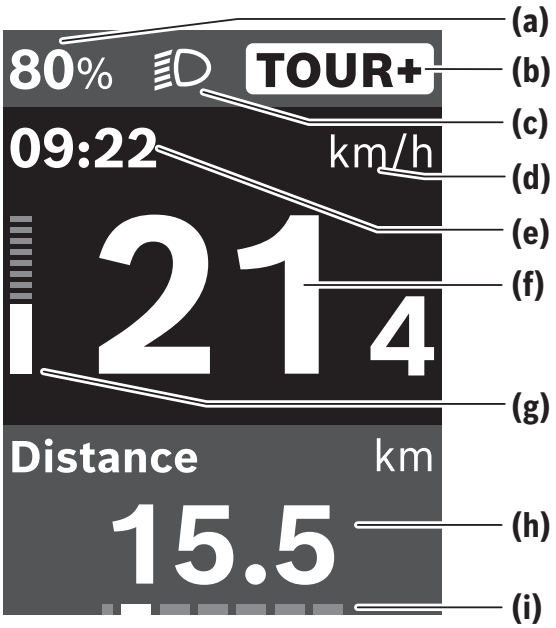

(a) State of charge of eBike battery
(b) Riding mode
(c) Bicycle lights
(d) Unit of speed indicator
(e) Time
(f) Speed
(g) Drive assistance indicator
(h) Data tiles to click through
(i) Navigation bar

The indicators **(a)** to **(g)** form the statusbar and riding data that is continuously shown.

The navigation bar **(i)** appears briefly to indicate which tile you are on.

You can access additional tiles/riding data on the standard screen. The statistical data, eBike battery range and average values are displayed on these tiles.



Press the ◂ button or ▸ button to scroll through the lower tiles/riding data.



Press the toggle button to the left ◂ or to the right ▸ to scroll through the lower tiles/riding data.



Briefly press the select button ▣ to scroll through the lower tiles/riding data.

Quick menu

Selected settings are displayed on the quick menu. These settings can also be changed while riding.

You can access the quick menu by pressing and holding (> 1 s) the select button ▣.

The following settings can be changed via the quick menu:

– **<ABS>** (optional)
  You can select an ABS mode here (if available).
– **<eShift>** (optional)
  The settings vary depending on the gearing in question. For example, you can set your cadence here, provided that the gearing supports this function.
– **<Ride>**
  All data on the distance traveled so far is reset to zero.
– **<Ride details>**
  All data on the distance traveled so far is reset to zero.

Note: Depending on the configuration of your eBike, additional functions may be available.

Settings menu

Accessing the Settings Menu

Scroll through the lower tiles/riding data in the standard screen until you reach the settings menu.

To do this, press:

– The buttons ◂ or ▸ or the toggle button to the left ◂ or to the right ▸ (5-button control unit)
– briefly the select button ▣ (3-button control unit)



Briefly press the select button ▣ to call up the settings menu.



Briefly press the select button ▣ to call up the settings menu.



Press and hold the select button ▣ > 1 s to call up the settings menu.

Note: The settings menu cannot be accessed while riding.

The **<Settings>** settings menu contains the following menu items:

– **<eBike>**
  You can find the following menu items here.
  - **<ABS>** (optional)
    You can select an ABS mode here (if available).
  - **<Shift recommendation>** or **<eShift>** (optional)
    You can activate or deactivate the gear change recommendation here. Depending on whether you have eShift, you can, for example, set your cadence here, provided that the gearing supports this function. The settings are dependent on the respective gear-shifting.
  - **<Components>**
    The components used with their version numbers are displayed here.
  - **<Wheel circumference>**
    The value of the rear wheel circumference can be adjusted or reset to the standard setting here.
  - **<Service>**
    The next service date is shown here, provided that it has been set by the service center.
– **<Display>**
  - **<Tile selection>**
    You can add individual tiles/riding data or hide existing information here. The order of the tiles/riding data is automatically created.
  - **<Theme>**
    You can choose between a dark or a bright background here.
  - **<Tip>**
    You can activate or deactivate whether tips are displayed here.
  - **<Trip summary>**
    You can activate or deactivate the summary of your ride when switching off here.
  - **<Brightness>**
    You can set the display brightness here.
  - **<Time>**
    You can set the time here.
  - **<Time format>**
    You can select one of the two time formats (12 h/24 h) here.
  - **<Language>**
    Here you can select a preferred language from the following languages:
    German, English, French, Dutch, Italian, Spanish, Portuguese, Danish, Swedish, Norwegian, Polish, Czech, Japanese, Traditional Chinese for Taiwan, Korean.
  - **<Units>**
    You can choose between metric or imperial units here.
– **<Ride>**
  - **<Reset now>**
    All data on the distance traveled so far is reset to zero.
  - **<Autom. reset>**
    The trip meter reset time can be set here.
  - **<Range reset>**
    The value for the range can be reset here.
– **<eBike Flow>**
  The connection status of the **eBike Flow** app is displayed here.

– **<Information>**
  - **<Getting started>**
    You are shown a QR code that takes you to the Bosch eBike website. It has information about the first steps for handling your eBike components.
    Note: If you open the settings menu, this menu item will appear at the top. By selecting the **<Don't show again>** menu item, the **<Getting started>** menu item will be filed under **<Information>**.
  - **<Help Center>**
    It has information about how to contact the Bosch eBike Help Center with more detailed information about your eBike components.
  - **<Certificates>**
    You can find certificates and e-labels here.
– **<Settings reset>**
  You can reset all of the system settings to the default values here.

Leaving the Settings Menu

Press the select button ▣ to save the settings and leave the settings menu.



Press and hold the ▣ or ◸ button for more than 1 s to leave the settings menu without saving the settings.



Press and hold the ▣ button for more than one second or press the toggle button to the left ◸ to leave the settings menu without saving the settings.



Press and hold the ▣ button for more than 1 s to leave the settings menu without saving the settings.

eBike Lock

The **<eBike Lock>** can be set up for any eBike via the **eBike Flow** app under **<Settings>** → **<Lock & Alarm>**. You can define the smartphone as a digital key for unlocking the eBike.

How it works

In conjunction with **<eBike Lock>**, the smartphone works in a similar way to a key for the drive unit. The **<eBike Lock>** is activated by switching off the eBike. When switching on, the eBike checks if any pre-set key is available. A white LED flashes on the **LED Remote/LED Controller/System Controller** control unit, and a lock symbol is shown on the **Purion 200/Kiox 400C** control unit and on the **Intuvia 200** display.

When the eBike is switched off, the drive unit will emit a "Lock" sound (i.e. an audio signal that is played **once**) to indicate that the assistance from the drive unit is switched off.

When the eBike is switched on, the drive unit will emit two "Unlock" sounds (i.e. an audio signal that is played **twice**) to indicate that the assistance from the drive unit is enabled again.

More information about this can be found in the **eBike Flow** app or in the Bosch eBike Help Center on the website www.bosch-ebike.com/help-center.

Battery Lock

In addition to the drive unit, the eBike battery can be locked when the eBike is switched off using **<Battery Lock>**.

You need a **Flow+ subscription** to activate **<Battery Lock>**. Fees may be payable for this.

Information about **Flow+ subscription** and details on individual services can be found in the **eBike Flow** app or in the Bosch eBike Help Center on the website www.bosch-ebike.com/help-center.

Maintenance and servicing

Maintenance and cleaning

Do not clean any of the components with pressurized water.

Keep the display clean.

Clean your display using a soft cloth dampened only with water. Do not use cleaning products of any kind.

If you use a blind plug for the connection socket of the **Intuvia 200** display, regularly check that it is fitted securely. This ensures that no dirt or water gets in and damages the display.

Have your eBike checked by an expert at least once a year (including mechanical parts, up-to-dateness of system software).

In addition, the service center may enter the service date based on the distance traveled and/or on a period of time. In this case, each time the display is switched on, a message is shown telling you when the service date is due.

Please have your eBike serviced and repaired by a service center.

- ▸ **Please make sure you have all repairs carried out by a service center.**

Note: If you are handing in your eBike to a service center for maintenance, it is recommended that you deactivate **<Lock & Alarm>**.

After-sales service and advice on using products

If you have any questions about the eBike and its components, contact a service center.

For contact details of service centers, please visit www.bosch-ebike.com.

More information

More information and videos about the eBike components and their functions can be found in the Bosch eBike Help Center.

Transport

- ▸ **If you transport your eBike attached to the outside of your car, e.g. on a bike rack, remove the display and the eBike battery (exception: Built-in eBike battery) to avoid damaging them.**

Recycling Program

The individual eBike components as well as accessories and packaging should be recycled in an environmentally friendly manner.

Do not dispose of eBikes and their components with household waste.

You may recycle your Bosch battery pack by calling 1.800.822.8837.

Robert Bosch GmbH
72757 Reutlingen
Germany

www.bosch-ebike.com

kontakt@bosch.de

0 275 U07 3DI (2026.02) T / 41

Purion 200

BRC3800



en Original operating instructions

This manual contains important safety, performance and service information. Read and understand it along with the information provided to you by your bicycle manufacturer before using the product, and keep it for reference.

Table of contents

Introduction 2
About Warnings 2
General Warnings 2
Using your Manual 3
Operating the Control Unit 4
Safety instructions 4
Product Description and Specifications 8
Operation 10
Establishing a smartphone connection 16
Troubleshooting 19
Maintenance and Service 22
Maintenance/cleaning 22
After-sales service and advice on using products 22
More information 22
Recycling Program 23

Introduction

About Warnings

This manual contains many **DANGER**, **WARNING**, and **CAUTION** indicators concerning the consequences of failure to use, assemble, maintain, store, inspect and dispose of a Bosch-equipped eBike in a safe manner.

– The combination of the safety alert symbol and the word **DANGER** indicates a hazardous situation that, if not avoided, will result in death or serious injury.
– The combination of the safety alert symbol and the word **WARNING** indicates a hazardous situation that, if not avoided, could result in death or serious injury.
– The combination of the safety alert symbol and the word **CAUTION** indicates a hazardous situation that, if not avoided, could result in minor or moderate injury.

General Warnings



Read all safety warnings and all instructions. Failure to follow the warnings and instructions may result in death or serious injury.

Save all safety warnings and instructions for future reference.

The term **eBike battery** used in these operating instructions refers to all original Bosch eBike batteries from the system generation **the smart system**.

▶ **Read ALL accompanying manuals before riding the bike for the first time.** Your Bosch Drive System comes with additional manuals and documents provided by the manufacturer of the bicycle and other components. Failure to read and understand safety information can result in death or serious injury.

⚠ WARNING

▶ **This manual contains important safety, performance and service information.** Read it before you take the first ride on your new bicycle, and keep it for reference. The manual can also be found online at www.bosch-ebike.com.

▶ **This manual is intended to be read together with the separate user manual provided with your bicycle.** Be sure to read all provided documents including labels on the product before your first ride.

▶ **Take responsibility for your own SAFETY.** If you have any questions or do not understand something, consult with your dealer or the bicycle or component manufacturer.

▶ **Some eBike accessories may present a choking hazard to small children.** Keep these accessories away from children.

⚠ CAUTION

▶ **The Bosch Drive System adds weight to your bicycle which you may not be used to lift.** Avoid injury, use proper lifting techniques.

Using your Manual

In addition to the functions outlined here, changes to software relating to troubleshooting and functional modifications may be introduced at any time.

Graphics

The bicycle shown in this manual may differ slightly from your bicycle, but will be similar enough to help you understand our instructions.

RIGHT-HAND and LEFT-HAND sides are determined by facing in the direction the bicycle will travel when going forward. When you see a broken line (------), the item referred to is hidden from view.

Operating the Control Unit

Safety instructions



Read all the safety and general instructions. Failure to follow the warnings and instructions may result in electric shock, fire and/or serious injury.

Save all safety warnings and instructions for future reference.

The term **eBike battery** used in these operating instructions refers to all original Bosch eBike batteries from the system generation **the smart system**.

The terms **drive** and **drive unit** used in these operating instructions refer to all original Bosch drive units from the system generation **the smart system**.

- ▶ **Read and observe the safety warnings and instructions in all operating instructions of the eBike components and your eBike.**
- ▶ **Do not attempt to fix display or control unit while riding!**
- ▶ **Do not allow yourself to be distracted by the control unit's display, particularly by text overlays shown according to the situation.** The display of riding information does not absolve the rider of the need to exercise due caution. If you do not focus exclusively on the traffic, you risk being involved in an accident. If you want to change settings on your control unit, beyond just changing the riding mode, stop cycling to do so.
- ▶ **Set the display brightness such that you can adequately see important information like speed or warning symbols.** An incorrectly set display brightness can result in dangerous situations.
- ▶ **Do not use the control unit as a handle.** If you lift up the eBike by the control unit, you may cause irreparable damage to the control unit.
- ▶ **Be aware that by selecting the drive mode you will also influence the amount of motor support from your bike.** Choose a drive mode that fits your cycling skills, test and familiarize yourself with drive modes and features in each mode before use.
- ▶ **The walk assistance function must only be used when pushing the eBike.** There is a risk of injury if the wheels of the eBike are not in contact with the ground while using the walk assistance.
- ▶ **When the walk assistance is activated, the pedals may turn at the same time.** When the walk assistance function is activated, make sure that there is enough space between your legs and the turning pedals to avoid the risk of injury.
- ▶ **When using the walk assistance, make sure that you can control the eBike and that you can hold it securely at all times.** Under certain circumstances, the walk assistance may stop (e.g. if the pedals hit an obstacle or if you accidentally let go of the button on the control unit). The eBike may suddenly move backwards onto you or tip up. This poses a particular risk for you if there is an additional load. When using the walk assistance, do not bring the eBike into situations in which you cannot hold the eBike using your own strength.
- ▶ **Do not activate walk assistance function while riding on the bike.** Only use walk assistance function when pushing the eBike.
- ▶ **Do not stand your eBike upside down on its handlebars and saddle if the control unit or its holder protrude from the handlebars.** This may irreparably damage the control unit or the holder.
- ▶ **Do not connect a charger to the eBike battery if the control unit or the display reports a critical error.** This may result in damage to your eBike battery. The eBike battery may catch fire, thereby resulting in serious burns and other injuries.
- ▶ **Caution lithium battery!** Do not store batteries in an environment with extremely high temperatures or extremely low air pressure, this can lead to an explosion or leakage of flammable liquids or gases.

Do not dispose the battery in your regular household trash or a public trash receptacle. Batteries that enter the regular waste stream can be damaged, leading to a fire resulting in serious injury, death, property damage and environmental contamination. Recycle the battery at an authorized recycling center or take them to a local household hazardous waste disposal facility.

- ▶ **The control unit features a wireless interface. Local operating restrictions, e.g. in airplanes or hospitals, must be adhered to.**
- ▶ **Caution!** When using the control unit with *Bluetooth*®, this may cause interference that affects other devices and systems, airplanes and medical devices (e.g. pacemakers, hearing aids). Similarly, the possibility that this may cause damage to humans and animals in the immediate vicinity cannot be completely excluded. Do not use the control unit with *Bluetooth*® in the vicinity of medical devices, gas stations, chemical plants, areas with a potentially explosive atmosphere or on blast sites. Do not use the control unit with *Bluetooth*® in airplanes. Avoid using the device in close proximity to your body over an extended period of time.
- ▶ The *Bluetooth*® wordmark and its logos are the registered trademarks and property of Bluetooth SIG, Inc. Any use of this wordmark/these logos by Robert Bosch GmbH, Bosch eBike Systems is under license.
- ▶ **Accessing other apps, reading pop up messages/other content, or otherwise using your mobile device while operating an eBike may be distracting. Distracted driving is a serious safety concern and can lead to accidents causing serious injury or death. In order to prevent distracted driving, most mobile devices come equipped with a "Do Not Disturb" mode. The "Do Not Disturb" mode should be used while operating an eBike.** Please consult your device-specific instructions for more information. You, as the eBike operator, are fully responsible for ensuring that you pay attention to road conditions and comply with traffic laws at all times.
- ▶ **Do not enter information or make selections while riding.** Interacting with the display or control unit while riding can lead to accidents causing serious injury or death. You must observe road and traffic conditions, and comply with traffic laws at all times.
- ▶ Please note that certain State or local laws may require that class III eBikes must be equipped with a functioning speedometer that displays speed in miles per hour. Riders must be aware of any and all applicable rules and regulations related to the operation or use of class III eBikes in any applicable jurisdictions before operating or otherwise using this product.
- ▶ **Observe all national regulations which set out the approved use of eBikes.**

Safety warnings for charging the battery inside the control unit

- ▶ **Only charge the control unit with USB power source (5 V, 600 mA max) and USB cable rated at least 600 mA.** Using USB power source or USB cable not appropriately rated for the application may result in fire, explosion or personal injury.
- ▶ **Charge the control unit in temperatures above +32 degrees F (0 degrees C) and below +104 degrees F (40 degrees C). Store control unit in locations where temperatures will not exceed 104 degrees F (40 degrees C).** This is important to prevent serious damage to the battery in the control unit.
- ▶ **Do not expose control unit to fire or excessive temperature.** Exposure to fire or temperature above 212 °F (100 °C) may cause explosion.
- ▶ **Do not recharge the control unit (via USB port) in damp or wet environment.** Water entering control unit may result in electric shock or fire.
- ▶ **Never submerge control unit in fluid of any kind or allow fluid to enter them.** Corrosive or conductive fluid (such as seawater or industrial chemical

or bleach containing products, etc.) can cause short circuit which may result in fire, personal injury and property damage.

- ▸ **Battery leakage may occur under extreme usage or temperature conditions. Avoid contact with skin and eyes.** The battery liquid is caustic and could cause chemical burns to tissues. If liquid comes in contact with skin, wash quickly with soap and water. If the liquid contacts your eyes, immediately flush eyes with water for a minimum of 15 minutes and seek medical attention.
- ▸ **Before each use, check the control unit, cable and plug.** If damage is detected, do not use the control unit. Damaged control unit, charging cables and plugs increase the risk of a fire, explosion and personal injury.
- ▸ **Do not disassemble control unit.** No user serviceable part inside. Incorrect reassembly or damage may result in fire or explosion.

NOTICE: This device complies with part 15 of the FCC Rules. Operation is subject to the following two conditions:

1. This device must not cause harmful interference, and
2. this device must accept any interference received, including interference that may cause undesired operation.

NOTICE: Changes or modifications made to this equipment not expressly approved by the Robert Bosch GmbH may void the FCC authorization to operate this equipment.

NOTE: This equipment has been tested and found to comply with the limits for a Class B digital device, pursuant to Part 15 of the FCC Rules. These limits are designed to provide reasonable protection against harmful interference in a residential installation. This equipment generates, uses and can radiate radio frequency energy and, if not installed and used in accordance with the instructions, may cause harmful interference to radio communications. However, there is no guarantee that interference will not occur in a particular installation. If this equipment does cause harmful interference to radio or television reception, which can be determined by turning the equipment off and on, the user is encouraged to try to correct the interference by one or more of the following measures:

- Reorient or relocate the receiving antenna.
- Increase the separation between the equipment and receiver.
- Connect the equipment into an outlet on a circuit different from that to which the receiver is connected.
- Consult the dealer or an experienced radio/TV technician for help.

Radiofrequency radiation exposure Information:
The radiated output power of the device is far below the FCC radio frequency exposure limits. Nevertheless, the device shall be used in such a manner that the potential for human contact during normal operation is minimized.

This equipment complies with FCC radiation exposure limits set forth for an uncontrolled environment into portable exposure conditions without distance restrictions. This transmitter must not be co-located or operating in conjunction with any other antenna or transmitter.

ISED Notice (Canada)

This device contains licence-exempt transmitter(s)/ receiver(s) that comply with Innovation, Science and Economic Development Canada's licence-exempt RSS(s). Operation is subject to the following two conditions:

1. this device may not cause interference, and
2. this device must accept any interference, including interference that may cause undesired operation of the device.

This equipment complies with Canada radiation exposure limits set forth for an uncontrolled environment into portable exposure conditions without distance restrictions. This transmitter must not be co-located or operating in conjunction with any other antenna or transmitter.

Privacy notice

When connecting the eBike to the **Bosch DiagnosticTool 3** or when exchanging eBike components, technical information about your eBike (e.g. bicycle manufacturer, model, bike ID, configuration data) as well as regarding the use of the eBike (e.g. total travel time, energy consumption, temperature) is transmitted to Bosch eBike Systems (Robert Bosch GmbH) for processing your request, in service cases and for the purposes of product improvement. You can find further information about data processing at www.bosch-ebike.com/privacy-full.

Note: To improve readability, some values are displayed without decimal places. These values have been rounded up or down.

Product Description and Specifications

Product Features

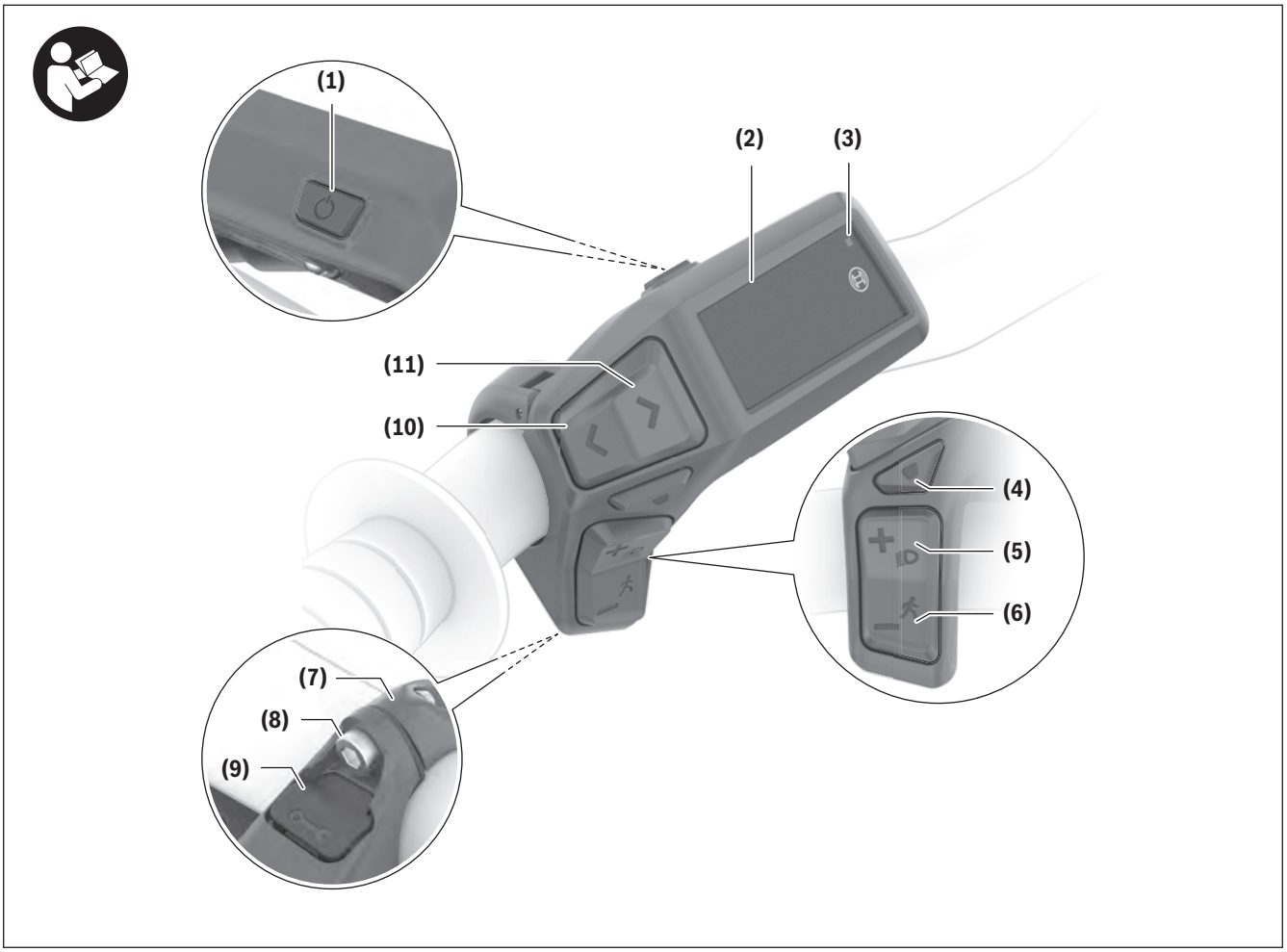

All illustrations of bike parts except for the drive unit, display (including control unit), speed sensor, and the corresponding holders are a schematic representation and may differ on your eBike.

(1) On/off button
(2) Display
(3) Ambient light sensor
(4) Select button
(5) Button for increasing the assistance level **+**/ bicycle lights
(6) Button for reducing the assistance level **–**/ walk assistance/hill-start assist
(7) Holder
(8) Fastening screw
(9) Diagnostics connection (for servicing purposes only)
(10) Scroll to the left button
(11) Scroll to the right button

Intended Use

The **Purion 200** control unit is designed for controlling an eBike and, as an option, for controlling an additional display from the system generation **the smart system** (excluding **Intuvia 100**).

If you use your smartphone as a display, you can use the **Purion 200** control unit to also control the **eBike Flow** app.

In order to be able to use the control unit to its fullest extent, a compatible smartphone with the **eBike Flow** app is required.

You can connect the **Purion 200** control unit with your smartphone via *Bluetooth*®.

Depending on the operating system of the smartphone, the **eBike Flow** app can be downloaded free of charge from the Apple App Store or Google Play Store.

Scan the code with your smartphone to download the **eBike Flow** app.

Technical Data

Control unit		Purion 200
Product code		BRC3800
Max. charging current of USB port[A)]	mA	600
USB port charging voltage[A)]	V	5
USB charging cable[B)]		USB Type-C®[C)]
Charging temperature	°F °C	+32 to +104 0 to +40
Operating temperature	°F °C	+23 to +104 −5 to +40
Storage temperature	°F °C	+50 to +104 +10 to +40
Diagnostic interface		USB Type-C®[C)]
Internal lithium-ion battery	V mAh	3.7 75
Protection rating		IP55
Dimensions (without fastening)	in mm	3.3 × 2.1 × 2.4 85 × 54 × 60
Weight	lbs g	0.11 49
Bluetooth® Low Energy 5.0		
– Frequency	MHz	2400–2480
– Transmission power	mW	1

A) Information for charging the **Purion 200** control unit; external devices cannot be charged.

B) Not included with the product as standard

C) USB Type-C® and USB-C® are trademarks of USB Implementers Forum.

The license information for the product is available at the following Internet address: www.bosch-ebike.com/licences

Certification information

FCC and IC ID (e-labels) can be found in the status screen under **<Settings>** → **<Information>** → **<Certificates>**. Scroll through all e-labels by briefly pressing the scroll on button **(11)**.

FCC ID: 2AWRC-BRC3800
IC: 26294-BRC3800

Note: If you wish to access information from the e-label of the **Purion 200** control unit, you may first have to remove any additional display or, if using a smartphone, close the ride screen in the **eBike Flow** app.

Operation

Requirements

The eBike can then only be switched on when the following requirements are met:

- A sufficiently charged eBike battery is inserted (see operating instructions for the eBike battery from the system generation **the smart system**).
- The speed sensor, if provided, is connected properly (see operating instructions for the drive unit from the system generation **the smart system**).

Note about the protective film

- **Before first use, remove the protective film from the display in order to ensure the full functionality of the control unit.** If the protective film remains on the display, this can impair the functionality/performance of the control unit.

Before initial commissioning

Before setting off, make sure that you can easily reach the buttons on the control unit. It is recommended to align the plus/minus buttons level so that it is almost perpendicular to the ground.

To **align** the **Purion 200** control unit, gently loosen the fastening screw **(8)** of the holder **(7)** until it can be turned on the handlebars. Align the control unit and carefully retighten the fastening screw **(8)**.

Control unit power supply

If a sufficiently charged eBike battery is inserted into the eBike and the eBike is switched on, the internal battery of the control unit is powered and charged.

If the state of charge of the internal battery of the control unit is very low and the eBike cannot be switched on after a long period of inactivity, you can charge the internal battery of the control unit via the diagnostics connection **(9)** with a USB Type-C® cable using a power bank or another suitable power source (charging voltage **5 V**; charging current max. **600 mA**).

The control unit's internal battery is charged via an external supply that meets the ES1 and PS2 limit values in accordance with IEC 62368-1.

Always close the flap of the diagnostics connection **(9)** so that no dust or moisture can enter.

Switching the eBike on/off

To **switch on** the eBike, briefly press the on/off button **(1)**. The eBike is ready to ride once the start-up animation is complete.

The display brightness is controlled by the ambient light sensor **(3)**. Therefore, do not cover the ambient light sensor **(3)**.

The drive is activated as soon as you start pedaling (except in the **OFF** riding mode). The drive power varies depending on the riding mode set.

As soon as you stop in normal operation, press the pedals, or as soon as you have reached a speed of **20/28 mph (32/45 km/h)**, the assistance will be switched off by the drive. The drive is automatically reactivated as soon as you press the pedals and the speed is below **20/28 mph (32/45 km/h)**.

To **switch off** the eBike, press the on/off button **(1)** briefly (< 3 s).

If no power is requested from the drive for approx. **10** minutes (e.g. due to the eBike being stationary) and no button is pressed, the eBike switches off automatically.

Operation

The functions of the buttons on the **Purion 200** control unit can be found in the following overview.

Depending on how long it is pressed for, the select button has 2 functions.

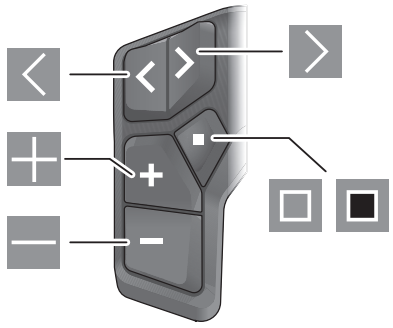

- Scroll to the left
- Scroll to the right
- Increase assistance level/scroll up
- Reduce assistance level/scroll down
- Open the select button/settings menu on the status screen (press briefly)
- Open the quick menu (from any screen except for the status screen) (press for > 1 s)

Navigating in the Menus

Briefly press the + button or the – button to navigate in the menus.

Briefly press the select button to select the relevant menu item.

You can go back a level by pressing and holding (> 1 s) the select button.

Note: The information and fault codes can be acknowledged using the button.

Note: Improvements and added functionality are regularly introduced through software updates. Therefore, the displays and functions shown here may differ from what is actually displayed.

Start screen

If you did not select another screen before the last time you switched off, you will be shown this screen.



- **(a)** State of charge of eBike battery (can be configured)
- **(b)** Riding mode
- **(c)** Unit of speed indicator
- **(d)** Your performance
- **(e)** Speed
- **(f)** Drive power

You can view other screens by pressing the or buttons. The statistical data and eBike battery range are displayed on these screens.

Quick menu

Selected settings are displayed on the quick menu. These settings can also be changed while riding.

You can access the quick menu by pressing and holding (> 1 s) the select button.

It cannot be accessed from the status screen.

The following settings can be changed via the quick menu:

- **<ABS>** (optional)
  You can select an ABS mode here (if available).
- **<eShift>** (optional)
  The settings vary depending on the gearing in question. For example, you can set your cadence here, provided that the gearing supports this function.
- **<Ride>**
  All data on the distance traveled so far is reset to zero.
- **<Ride details>**
  All data on the distance traveled so far is reset to zero.

Note: Depending on the configuration of your eBike, additional functions may be available.

Status screen

From the start screen, you can access the status screen via the ◁ button.

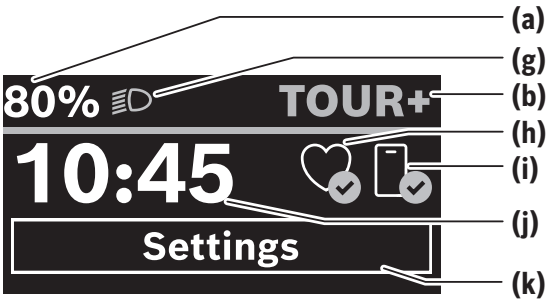

(a) State of charge of eBike battery (can be configured)
(b) Riding mode
(g) Bicycle lights
(h) Heart rate monitor connection status
(i) Smartphone connection status
(j) Time
(k) Settings menu

Accessing the Settings Menu

You can access the settings menu from the status screen. Press the ▣ button to call up the settings menu.

Note: The settings menu cannot be accessed while riding.

The **<Settings>** settings menu contains the following menu items:

– **<eBike>**
  You can find the following menu items here.
  - **<ABS>** (optional)
    You can select an ABS mode here (if available).
  - **<Shift recom.>** or **<eShift>** (optional)
    You can activate or deactivate the gear change recommendation here. Depending on whether you have eShift, you can, for example, set your cadence here, provided that the gearing supports this function. The settings are dependent on the respective gear-shifting.
  - **<Components>**
    The components used with their version numbers are displayed here.
  - **<Wheel circumference>**
    The value of the rear wheel circumference can be adjusted or reset to the standard setting here.
  - **<Service>**
    The next service date is shown here, provided that it has been set by the service center.

– **<Display>**
  - **<Statusbar>**
    You can choose between the **<Battery>**, **<Time>**, **<Speed>** or **<eShift>** (optional) displays here.
    Note: <eShift> is only possible in conjunction with a compatible eShift gear-shifting system.
    Note: This function is not available for eBikes with a support level up to **28 mph (45 km/h)**.
  - **<Tip>**
    You can activate or deactivate whether tips are displayed here.
  - **<Trip summary>**
    You can activate or deactivate the summary of your ride when switching off here.
  - **<Trick Check>**
    You can switch the trick check on and off here.
    Note: The availability of the function is dependent on the relevant drive unit.
  - **<Brightness>**
    You can set the display brightness here.
  - **<Time>**
    You can set the time here.
  - **<Time format>**
    You can select one of the two time formats (12 h/24 h) here.
  - **<Language>**
    Here you can select a preferred language from the following languages:
    German, English, French, Dutch, Italian, Spanish, Portuguese, Danish, Swedish, Norwegian, Polish,

Czech, Japanese, Traditional Chinese for Taiwan, Korean.

- **<Units>**
  You can choose between metric or imperial units here.

– **<Ride>**
- **<Reset now>**
  All data on the distance traveled so far is reset to zero.
- **<Autom. reset>**
  The trip meter reset time can be set here.
- **<Range reset>**
  The value for the range can be reset here.

– **<eBike Flow>**
The connection status of the **eBike Flow** app is displayed here.

– **<Information>**
- **<Getting started>**
  You are shown a QR code that takes you to the Bosch eBike website. It has information about the first steps for handling your eBike components.
  Note: If you open the settings menu, this menu item will appear at the top. By selecting the **<Don't show again>** menu item, the **<Getting started>** menu item will be filed under **<Information>**.
- **<Help Center>**
  It has information about how to contact the Bosch eBike Help Center with more detailed information about your eBike components.
- **<Certificates>**
  You can find certificates and e-labels here.

– **<Settings reset>**
You can reset all of the system settings to the default values here.

Leaving the Settings Menu

Briefly press the ▣ button to save the settings and leave the settings menu.

Press and hold the ▣ or ◁ button for more than one second to leave the settings menu without saving the settings.

Display configuration

<Display configuration> can be found in the **eBike Flow** app under **<Settings>**. The eBike must be switched on and the smartphone must be connected.

The content shown on your display can be customized via **<Display configuration>**:

– Change the order of individual screens
– Add new screens
– Edit and partially delete existing screens
– Add new screens after an update

You can find further information on **<Display configuration>** at any time in the **eBike Flow** app.

Selecting the Riding Mode

You can set how much the eBike drive assists you while pedaling on the control unit using the increase assistance level **+ (5)** and reduce assistance level **– (6)** buttons. The riding mode can be changed even while cycling, and is displayed in color.

Additional riding modes can be activated via the **eBike Flow** app or at your service center if this is provided by the bicycle manufacturer.

Note: The riding modes available depend on the respective drive unit. The intensity and duration of the assistance vary depending on the riding mode.

Riding mode	Notes
OFF	Drive assistance is switched off. The eBike can just be moved by pedaling, as with a normal bicycle.
ECO	Effective assistance with maximum efficiency, for maximum range
ECO+	Range-optimized riding mode that only switches on the drive assistance above a certain rider performance; for natural cycling and for a maximum range
TOUR	Steady assistance, long range for touring
TOUR+	Dynamic assistance for natural, sporty cycling

Riding mode	Notes
eMTB[A)]	Optimal assistance whatever the terrain, rapid acceleration when starting from a standstill, improved dynamics and top performance including “Extended Boost”
eMTB+[A)]	Dynamic support to the maximum – at the perfect level and with up to 100 % more “Extended Boost” – for even more fun on trails
SPORT	Powerful assistance, for mountain biking and for cycling in urban traffic
TURBO	Maximum assistance even at a high cadence, for biking sports
AUTO	The assistance adapts dynamically to the riding situation.
RACE[A)]	Maximum assistance on the eMTB racetrack; very quick response and maximum "Extended Boost" for the best possible performance in competitive situations
CARGO	Steady, powerful assistance for safely transporting heavy weights
SPRINT	Dynamic assistance according to cadence – for athletic eGravel and eRoad cycling with rapid sprints and frequent ascents

A) The "Extended Boost" provides a controlled pushing force over a short distance once pedaling is stopped.

Adjusting the Riding Mode

The riding modes can be adapted within certain limits using the **eBike Flow** app. This gives you the option of adjusting your eBike to your personal requirements.

It is not possible to create a completely new riding mode. You can only adjust the riding modes that have been enabled by the bicycle manufacturer on your system.

In addition, restrictions in your country may mean that it is not possible to adjust a particular riding mode.

The following parameters are available for making adjustments:

- Assistance in relation to the base value of the riding mode (within the legal requirements)
- Drive response
- Top limit speed (within the legal requirements)
- Maximum torque (within the limits of the drive)

Note: Please ensure that your modified riding mode retains the position, name and color on all displays and controls.

Interaction of the drive unit with the gear-shifting

You should shift through gears on an eBike in the same manner as when using a normal bicycle (observe the operating instructions of your eBike with regard to this point).

Irrespective of the type of gear shifting, it is advisable that you briefly reduce the pressure on the pedals when changing gear. This will aid gear shifting and reduce wear on the powertrain.

By selecting the correct gear, you can increase your speed and range while applying the same amount of force.

For this reason, follow the gear change recommendations shown on your display.

Switching bike lights on/off

Before starting each journey, check that your bike lights are working correctly.

To **switch on** the bicycle lights, press the bicycle lights button **(5)** for more than 1 s.

Switching the walk assistance on/off

The walk assistance can make it easier for you to push the eBike. The maximum speed of the walk assistance is **2.5 mph (4 km/h)**. The bicycle manufacturer can adjust the default so that it is lower and, if necessary, it can also be adjusted by a service center.

- ▶ **The walk assistance function must only be used when pushing the eBike.** There is a risk of injury if

the wheels of the eBike are not in contact with the ground while using the walk assistance.

- ▶ **If the selected gear is too high, the drive unit may not be able to move the eBike or activate the roll-away lock.**

Note: The walk assistance function is deactivated in the **OFF** riding mode.

To **activate** walk assistance, press and hold the walk assistance button **(6)** for more than 1 s.

The drive begins to push and the walk assistance is shown on the display.

If you release the walk assistance **(6)** button, walk assistance is stopped. You can reactivate walk assistance straight away by pressing the walk assistance **(6)** button within 10 s.

If you do not reactivate walk assistance within 10 s, walk assistance automatically switches off.

Walk assistance is always ended if

- The rear wheel jams,
- The bicycle cannot move over ridges,
- A body part is blocking the bike crank,
- An obstacle continues to turn the crank,
- You start pedaling,
- The increase assistance level **+**/bicycle lights **(5)** button or on/off button **(1)** is pressed.

Walk assistance has a roll-away lock, i.e. even after walk assistance has been used, rolling backwards is actively curbed by the drive for a few seconds, and you cannot push the eBike backwards or can only do so with difficulty.

The roll-away lock is immediately deactivated by pressing the increase assistance level **+**/bicycle lights **(5)** button.

The walk assistance function is subject to local regulations; the way it works may therefore differ from the description above. It can also be deactivated.

Switching Hill-Start Assist On and Off

Hill-start assist makes it easier to start riding on hills.

To **activate** hill-start assist, place your foot on the pedal so that your eBike detects that you would like to start riding. Then press the hill-start assist button **(6)** for more than 1 s.

Note: Follow the order for actions when activating the hill-start assist button. The walk assistance will activate if you first press the hill-start assist button **(6)** and then place your foot on the pedal.

Once you have successfully activated hill-start assist, let go of the hill-start assist button **(6)** again. Once you have safely started riding, the hill-start assist will deactivate automatically and you will continue riding in the set riding mode. You can end hill-start assist at any time by taking your foot off the pedal.

You can then reactivate hill-start assist within 10 s by placing your foot back on the pedal. This will be shown on your display. It is not necessary to press the hill-start assist button **(6)** again. If you press the hill-start assist button **(6)** within 10 s, the countdown will be reset once and you will again have 10 s to activate hill-start assist.

Hill-start assist has a roll-away lock, i.e. even after hill-start assist has been used, rolling backwards is actively curbed by the drive for a few seconds, and this prevents the eBike from rolling backwards unintentionally.

The hill-start assist function is subject to local regulations; the way it works may therefore differ from the description above, or the function may even be deactivated completely.

ABS – Anti-lock braking system (optional)

If the eBike is fitted with a Bosch eBike ABS from the system generation **the smart system**, the ABS symbol lights up when the eBike system starts.

After moving off, the ABS internally checks its functionality and the ABS symbol goes off.

In the event of an error, the ABS symbol lights up and a message appears on the control unit. This means that the ABS is inactive. You can press the select button **(4)** to acknowledge the error and the ABS error message disappears. The ABS symbol appears in the statusbar to notify you that the ABS is still switched off.

For details on the ABS and how it works, including how it acts during a trick, please refer to the ABS operating instructions.

Establishing a smartphone connection

In order to be able to use the following eBike functions, a smartphone with the **eBike Flow** app is required.

Connection to the app occurs via a *Bluetooth*® connection.

Switch on the eBike and wait for the starting animation. Do not ride the eBike.

Begin *Bluetooth*® pairing by pressing and holding (> 3 s) the on/off button **(1)**. When the status of the pairing process is displayed, release the on/off button **(1)**.

Confirm the connection request in the app.

Software updates

Software updates must be manually started in the **eBike Flow** app.

Software updates are transferred to the control unit in the background of the app as soon as it is connected to the app. During the software update, keep watching the display on the control unit **Purion 200**. The eBike is then restarted.

You can control the software updates via the **eBike Flow** app.

Activity tracking and digital eBike garage

In order to record activities, it is necessary to register and log into the **eBike Flow** app.

To record activities, you must consent to the storage of your location data in the app. Without this, your activities cannot be recorded in the app. For location data to be recorded, you must be logged in to a user account.

You can add a total of six eBikes to one user account in the **eBike Flow** app.

eBike Lock

The **<eBike Lock>** can be set up for any eBike via the **eBike Flow** app under **<Settings>** → **<Lock & Alarm>**. In the process, a key for unlocking the eBike is saved on the smartphone and/or the **Kiox 300/ Kiox 500** display.

The **<eBike Lock>** is automatically enabled in the following cases:

– The eBike is switched off via the control unit
– The eBike is switched off automatically

If the eBike is switched on and the smartphone is connected to the eBike via *Bluetooth*®, or the pre-set display is fitted in the holder, the eBike will be unlocked.

<eBike Lock> is linked to your **user account**.

If you lose your smartphone, you can log in to your user account on the **eBike Flow** app using another smartphone and then unlock the eBike.

If the display is lost, you can reset all the digital keys in the **<Lock & Alarm>** menu item in the **eBike Flow** app.

Caution! If you select a setting in the app that could have negative consequences in combination with the **<eBike Lock>** (e.g. deleting your eBike or user account), you will be shown warning messages be-

forehand. **Please read through these thoroughly and adhere to the warnings that are issued (e.g. before deleting your eBike or user account).**

Setting up <eBike Lock>

In order to be able to set up the **<eBike Lock>**, the following conditions must be fulfilled:

- The **eBike Flow** app has been installed.
- A user account has been created.
- The eBike is not currently updating.
- The eBike is connected to the smartphone via *Bluetooth*®.
- The eBike is stationary.
- The smartphone is connected to the Internet.
- The eBike battery is sufficiently charged and the charging cable is not connected.

You can set up **<eBike Lock>** in the **eBike Flow** app under the **<Lock & Alarm>** menu item.

The drive unit of your eBike only provides support if the smartphone is connected to the eBike via *Bluetooth*® or the display is placed in the holder when the eBike is switched on. If the smartphone is used as a key, your smartphone must have *Bluetooth*® switched on, and the **eBike Flow** app must be active in the background. When the **<eBike Lock>** is activated, you can continue to use your eBike without assistance from the drive unit.

Compatibility

The **<eBike Lock>** is compatible with all Bosch drive units from the system generation **the smart system**.

How it works

In combination with the **<eBike Lock>**, the smartphone and the display work like a key for the drive unit. The **<eBike Lock>** is activated by switching off the eBike. When switching on, the eBike checks if any pre-set key is available. This is indicated by a padlock symbol on the **Purion 200** control unit.

Note: The **<eBike Lock>** alone does not provide adequate theft protection; it is simply a supplement to a mechanical lock. The **<eBike Lock>** does not provide any form of mechanical lock for the eBike. Only the assistance from the drive unit is deactivated. The drive unit will be unlocked for as long as the smartphone is connected to the eBike via *Bluetooth*® or the display is placed in the holder.

If you want to give third parties temporary or permanent access to your eBike, share one of the preset digital keys (display/smartphone). As a result, the <eBike Lock> is still active. If you want to take your eBike to a service, the <eBike Lock> can be deactivated in the eBike Flow app in the <Settings> menu item. If you wish to sell your eBike, you will also need to delete the eBike from your user account in the **eBike Flow** app in the **<Settings>** menu item.

When the eBike is switched off, the drive unit will emit a "Lock" sound (i.e. an audio signal that is played **once**) to indicate that the assistance from the drive unit is switched off.

When the eBike is switched on, the drive unit will emit two "Unlock" sounds (i.e. an audio signal that is played **twice**) to indicate that the assistance from the drive unit is enabled again.

The "Lock" sound will help you determine whether or not the **<eBike Lock>** on your eBike is active. The audio signal is activated by default, but it can be deactivated in the **eBike Flow** app in the **<Locking sound>** menu item by selecting the lock symbol under your eBike.

Note: If you can no longer set up or switch off the **<eBike Lock>**, please contact your service center.

Replacing the Smartphone

1. Install the **eBike Flow** app on the new smartphone.
2. Log in with **the same** user account that was used to activate the **<eBike Lock>**.
3. The **<eBike Lock>** is displayed as set up in the **eBike Flow** app.

More information about this can be found in the **eBike Flow** app or in the Bosch eBike Help Center on the website www.bosch-ebike.com/help-center.

Flow+ subscription functions

For the following functions, a **Flow+ subscription** is required. Fees may be payable for this.
Information about **Flow+ subscription** and details on individual services can be found in the **eBike Flow** app or in the Bosch eBike Help Center on the website www.bosch-ebike.com/help-center.

Battery Lock

The **<Battery Lock>** can be set up for any eBike via the **eBike Flow** app under **<Settings>** → **<Lock & Alarm>**.
In addition to the drive unit, the eBike battery can be locked when the eBike is switched off using **<Battery Lock>**. The eBike battery will only be unlocked again when the pre-set key (smartphone and/or **Kiox 300/ Kiox 500** display) is present when the eBike is switched on.

Share eBike

With the **eBike Flow** app, you can share your eBike and its digital functions with up to 5 other people. You remain in control of the settings, functions and updates. The people you choose to share with can only use the digital functions preselected by you. In order for you to be able to share the eBike, “share eBike” must be registered to you in the **eBike Flow** app and you must hold an active **Flow+ subscription**. The eBike software must be up to date. Under **<Settings>** in the **eBike Flow** app, you can create an invitation link and send this to the people you want to share with. Once they have accepted the invitation, they can connect the shared eBike with their own **eBike Flow** app user account.

Troubleshooting

The error messages are displayed in a pop-up on the **Purion 200** control unit.

The control unit shows whether critical errors or less critical errors occur on the eBike.

The error messages generated by the eBike can be read via the **eBike Flow** app or by your service center.

Via a link in the **eBike Flow** app, information about the error and support for rectifying the error can be displayed.

Less critical errors

Errors are acknowledged by pressing the select button **(4)**.

You can use the following table to rectify the errors yourself if necessary. Otherwise, please contact your service center.

Number	Troubleshooting
503009	Check your display, the cabling and any power consumers connected to the display. If the problem persists, please get in touch with your service center.
523003	Check that the rim magnet is firmly attached to the valve. Then restart your eBike and check the display after a short ride. If the problem persists, please get in touch with your service center.
523006	Check the rim magnet and spoke magnet, if present. Then, restart your eBike. If the problem persists, please get in touch with your service center.
853201	
523005	The indicated error numbers show that the sensors are struggling to detect the magnetic field. See whether you have lost the magnet while riding. If you are using a magnet sensor, check that the sensor and magnet have been properly installed. Also make sure that the cable to the sensor is not damaged. If you are using a rim magnet, make sure that you do not have any magnetic field interference in the vicinity of the drive unit.
514001	
514002	
514003	
514006	
650001	Check that the eBike battery is sitting correctly. Check the electrical contacts on the eBike battery and the eBike battery holder for signs of corrosion. If necessary, clean the contacts using a soft, damp cloth and leave to dry. Run an eBike update, if available, via the **eBike Flow** app. Restart your eBike. If the problem persists, please get in touch with your service center.
660001	Restart your eBike. If the problem persists, do not charge your eBike battery and do not continue to use it. Please contact a service center.
660002	Do not remove the eBike battery from the eBike. Connect the eBike battery to a charger and wait at least 10 s. Re-insert the eBike battery into the eBike. Restart your eBike.
670001	Disconnect the charger from your eBike and from the mains power supply and wait at least 5 s. Then reconnect the charger to restart the charging process.

Number	Troubleshooting
	Notes: – Do not connect the charger's mains cable to the mains power supply while your eBike or the eBike battery are still starting up/shutting down. – Do not press the on/off button on the eBike battery while the mains cable of the charger is being connected or is already connected to the mains power supply. – Do not insert and remove the charger plug in quick succession. If the problem persists: – Use another charger in order to rule out charger errors. – Run an eBike update, if available, via the **eBike Flow** app. If the problem occurs while charging on the go: – Check whether the mains power supply meets the input parameters on the charger's type plate. – If the problem persists, please get in touch with your service center.
680007	The indicated error numbers show that the eBike battery is outside of the permissible operating temperature. The charging of the eBike battery is interrupted. As soon as the operating temperature returns to the permissible range, the charging process will start again.
680009	
680012	
680014	
680016	
680017	
903002	Try to ride your eBike to a different location for better signal.
903005	If the problem persists, please get in touch with your service center.
112000	Log back in to the **eBike Flow** app and connect your smartphone. If the problem persists: – Reinstall the app and then start your eBike. – Then connect your smartphone with your eBike. If the problem persists: – Please contact your service center.
1B0002	Carry out the pairing process in the **eBike Flow** app again. Restart your eBike. If the problem persists, please get in touch with your service center.
1B7213	Run a software update in the **eBike Flow** app. Restart your eBike. If the problem persists, please get in touch with your service center.
1B7613	
1B7713	
1C7413	
1C7513	
1C7713	
5F0200	

Number	Troubleshooting
F10005	To rectify the software incompatibility, all eBike components must have the latest software. – Connect all components belonging to the eBike, including the removable and optional components. – Run a software update with the **eBike Flow** app or ask a service center to do so. – Restart your eBike.

Critical errors

If a critical error occurs, follow the instructions in the table below.

Number	Instructions
6A0000	Connect all components belonging to the eBike, including the removable and optional components. Run a software update. Restart your eBike. If the problem persists, please get in touch with your service center.
F10004	Connect all components belonging to the eBike, including the removable and optional components. Run a software update. All components require the latest software version. Restart your eBike. If the problem persists, please get in touch with your service center.
890000	– Acknowledge the error code. – Restart the eBike. If the problem persists: – Acknowledge the error code. – Run the software update. – Restart the eBike. If the problem persists: – Please contact a service center.

Maintenance and Service

Maintenance/cleaning

⚠ WARNING

- ▶ **Do not open any of the components. Service should only be carried out at an authorized Bosch eBike dealer.** Failure to follow above warning can cause death or serious injury. Refer to your bicycle manual or component manual for all non-Bosch drive system components.
- ▶ **Do not paint any components of the Bosch drive system as they may cause premature failure of the component.**
- ▶ **Do not submerge your eBike components in water, or wash with pressurized hose.** Your Bosch drive unit is designed to be water tight to rain water or non-pressure hose washing.

Do not clean any of the components with pressurized water.

Keep the display of your control unit clean. Dirt can cause faulty brightness detection.

Clean your control unit using a soft cloth dampened only with water. Do not use cleaning products of any kind.

Note: The **Purion 200** control unit may fog up under certain temperature and humidity conditions. This is not an error. Put the eBike in a heated room.

Have your eBike checked by an expert at least once a year (including mechanical parts, up-to-dateness of system software).

In addition, the service date based on the distance traveled and/or on a period of time can be entered at a service center. In this case, the control unit displays a message telling you when the service date is due each time it is switched on.

Please have your eBike serviced and repaired by a service center.

- ▶ **Please make sure you have all repairs carried out by a service center.**

Note: If you are handing in your eBike to a service center for maintenance, it is recommended that you deactivate **<Lock & Alarm>**.

Note: If you do not use the **Purion 200** control unit for a long time, charge it in accordance with (see "Control unit power supply", page English – 10).

After-sales service and advice on using products

If you have any questions about the eBike and its components, contact a service center.

For contact details of service centers, please visit www.bosch-ebike.com.

More information

More information and videos about the eBike components and their functions can be found in the Bosch eBike Help Center.

Recycling Program



The individual eBike components as well as accessories and packaging should be recycled in an environmentally friendly manner.

Do not dispose of eBikes and their components with household waste.



You may recycle your Bosch battery pack by calling 1.800.822.8837.

Robert Bosch GmbH
72757 Reutlingen
Germany

www.bosch-ebike.com

kontakt@bosch.de

0 275 U07 3RP (2026.02) T / 74

Purion 400

BHU3500



en Original operating instructions

This manual contains important safety, performance and service information. Read and understand it along with the information provided to you by your bicycle manufacturer before using the product, and keep it for reference.

Table of Contents

Introduction 2
About Warnings 2
General Warnings 2
Using your Manual 3
Operating your Bosch Display 4
Safety instructions 4
Product Description and Specifications 6
Operation 8
Maintenance and Service 13
Maintenance and cleaning 13
After-sales service and advice on using products 13
More information 13
Recycling Program 13

Introduction

About Warnings

This manual contains many **DANGER**, **WARNING** and **CAUTION** indicators concerning the consequences of failure to use, assemble, maintain, store, inspect and dispose of a Bosch-equipped eBike in a safe manner.

– The combination of the safety alert symbol and the word **DANGER** indicates a hazardous situation that, if not avoided, will result in death or serious injury.
– The combination of the safety alert symbol and the word **WARNING** indicates a hazardous situation that, if not avoided, could result in death or serious injury.
– The combination of the safety alert symbol and the word **CAUTION** indicates a hazardous situation that, if not avoided, could result in minor or moderate injury.

General Warnings



Read all safety warnings and all instructions. Failure to follow the warnings and instructions may result in death or serious injury.

Save all safety warnings and instructions for future reference.

The term **eBike battery** used in these operating instructions refers to all original Bosch eBike batteries from the system generation **the smart system**.

▶ **Read ALL accompanying manuals before riding the bike for the first time.** Your Bosch Drive System comes with additional manuals and documents provided by the manufacturer of the bicycle and other components. Failure to read and understand safety information can result in death or serious injury.

⚠ WARNING

▶ **This manual contains important safety, performance and service information.** Read it before you take the first ride on your new bicycle, and keep it for reference. The manual can also be found online at www.bosch-ebike.com.

▶ **This manual is intended to be read together with the separate user manual provided with your bicycle.** Be sure to read all provided documents including labels on the product before your first ride.

▶ **Take responsibility for your own SAFETY.** If you have any questions or do not understand something, consult with your dealer or the bicycle or component manufacturer.

▶ **Some eBike accessories may present a choking hazard to small children.** Keep these accessories away from children.

⚠ CAUTION

▶ **The Bosch Drive System adds weight to your bicycle which you may not be used to lift.** Avoid injury, use proper lifting techniques.

Using your Manual

In addition to the functions outlined here, changes to software relating to troubleshooting and functional modifications may be introduced at any time.

Graphics

The bicycle shown in this manual may differ slightly from your bicycle, but will be similar enough to help you understand our instructions.

RIGHT-HAND and LEFT-HAND sides are determined by facing in the direction the bicycle will travel when going forward. When you see a broken line (------), the item referred to is hidden from view.

Operating your Bosch Display

Safety instructions



Read all the safety and general instructions. Failure to follow the warnings and instructions may result in electric shock, fire and/or serious injury.

Save all safety warnings and instructions for future reference.

The term **eBike battery** used in these operating instructions refers to all original Bosch eBike batteries from the system generation **the smart system**.

The terms **drive** and **drive unit** used in these operating instructions refer to all original Bosch drive units from the system generation **the smart system**.

- ▸ **Read and observe the safety warnings and instructions in all operating instructions of the eBike components and your eBike.**
- ▸ **Do not attempt to secure the display or control unit while riding.**
- ▸ **Do not allow yourself to be distracted by the display, particularly by text overlays shown according to the situation.** The display of riding information does not absolve the rider of the need to exercise due caution. If you do not focus exclusively on the traffic, you risk being involved in an accident. If you want to make entries in your display other than switching the riding mode, stop cycling and enter the relevant details.
- ▸ **Do not operate your smartphone during the journey.** If you do not concentrate exclusively on the traffic around you, you risk being involved in an accident. When using your smartphone, only enter the relevant data once you've stopped.
- ▸ **Set the display brightness such that you can adequately see important information like speed or warning symbols.** An incorrectly set display brightness can result in dangerous situations.
- ▸ **Do not open the display.** Opening the display can destroy it and void any warranty claims.
- ▸ **Do not use the display as a handle.** Lifting the eBike up by the display can cause irreparable damage to the display.
- ▸ **Do not stand your eBike upside down on its saddle and handlebars if the display or its holder protrude from the handlebars.** This may irreparably damage the display or the holder.
- ▸ **The display Purion 400 contains a buzzer. Loud audio signals may sound under certain circumstances. The loud sound can damage hearing.** It is therefore advisable to keep a sufficient distance from the display.
- ▸ **Do not enter information or make selections while riding.** Interacting with the display or control unit while riding can lead to accidents causing serious injury or death. You must observe road and traffic conditions, and comply with traffic laws at all times.
- ▸ **Accessing other apps, reading pop up messages/other content, or otherwise using your mobile device while operating an eBike may be distracting. Distracted driving is a serious safety concern and can lead to accidents causing serious injury or death. In order to prevent distracted driving, most mobile devices come equipped with a “Do Not Disturb” mode. The “Do Not Disturb” mode should be used while operating an eBike.** Please consult your device-specific instructions for more information. You, as the eBike operator, are fully responsible for ensuring that you pay attention to road conditions and comply with traffic laws at all times.
- ▸ Please note that certain State or local laws may require that class III eBikes must be equipped with a functioning speedometer that displays speed in miles per hour. Riders must be aware of any and all applicable rules and regulations related to the operation or use of class III eBikes in any applicable ju-

risdictions before operating or otherwise using this product.

NOTICE: This device complies with part 15 of the FCC Rules. Operation is subject to the following two conditions:

1. This device must not cause harmful interference, and
2. this device must accept any interference received, including interference that may cause undesired operation.

NOTICE: Changes or modifications made to this equipment not expressly approved by the Robert Bosch GmbH may void the FCC authorization to operate this equipment.

NOTE: This equipment has been tested and found to comply with the limits for a Class B digital device, pursuant to Part 15 of the FCC Rules. These limits are designed to provide reasonable protection against harmful interference in a residential installation. This equipment generates, uses and can radiate radio frequency energy and, if not installed and used in accordance with the instructions, may cause harmful interference to radio communications. However, there is no guarantee that interference will not occur in a particular installation. If this equipment does cause harmful interference to radio or television reception, which can be determined by turning the equipment off and on, the user is encouraged to try to correct the interference by one or more of the following measures:

– Reorient or relocate the receiving antenna.
– Increase the separation between the equipment and receiver.
– Connect the equipment into an outlet on a circuit different from that to which the receiver is connected.
– Consult the dealer or an experienced radio/TV technician for help.

CAN ICES3(B)/NMB3(B)
Responsible Party for North-America:
Bosch eBike Systems Americas
Robert Bosch LLC
27211 Burbank, Foothill Ranch, CA 92610, USA,
www.bosch-ebike.com/us/

Privacy notice

When connecting the eBike to the **Bosch DiagnosticTool 3** or when exchanging eBike components, technical information about your eBike (e.g. bicycle manufacturer, model, bike ID, configuration data) as well as regarding the use of the eBike (e.g. total travel time, energy consumption, temperature) is transmitted to Bosch eBike Systems (Robert Bosch GmbH) for processing your request, in service cases and for the purposes of product improvement. You can find further information about data processing at www.bosch-ebike.com/privacy-full.

Note: To improve readability, some values are displayed without decimal places. These values have been rounded up or down.

Product Description and Specifications

Product Features Purion 400

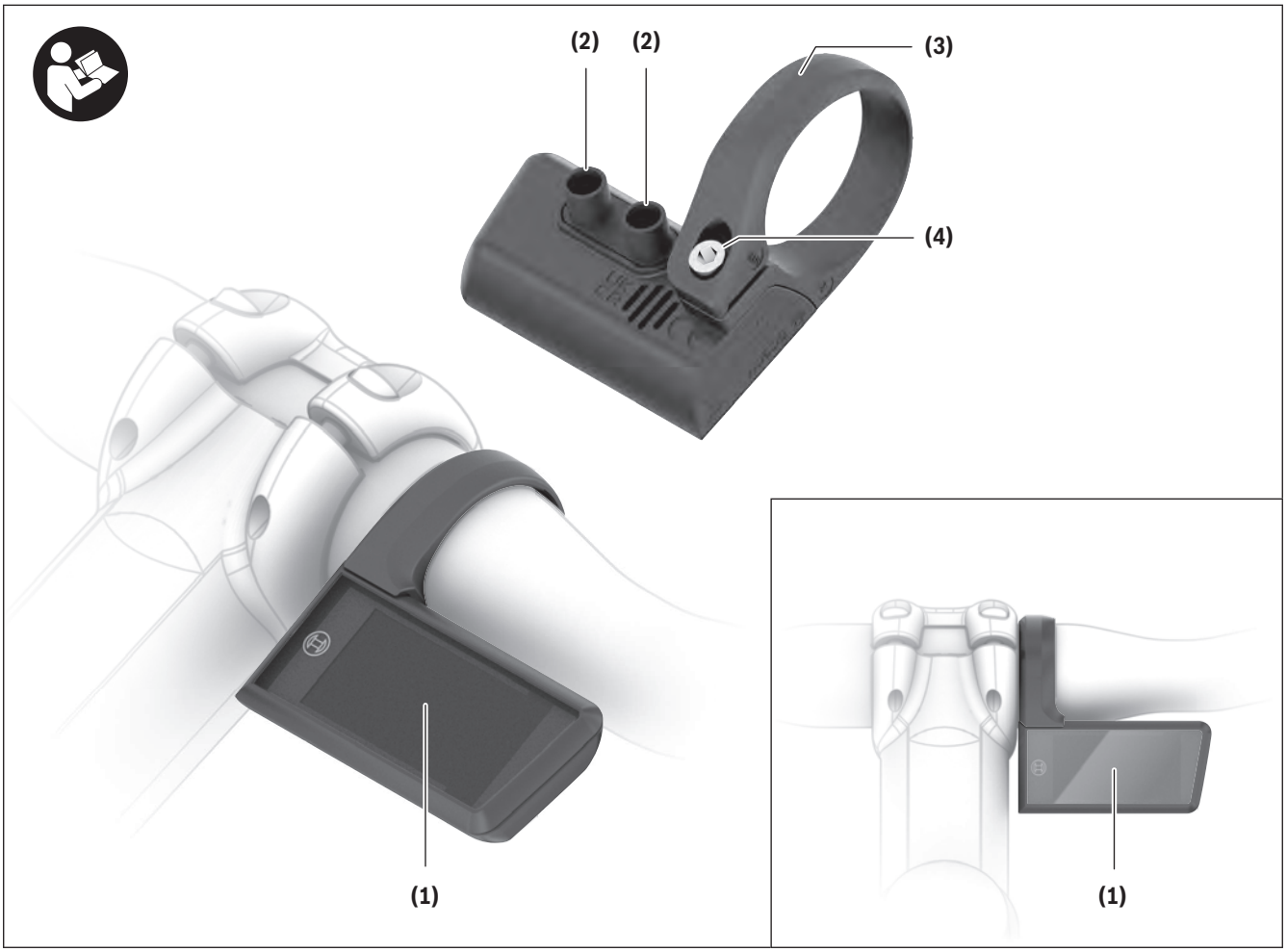

(1) Display
(2) Cable connections
(3) Clamp
(4) Fastening screw

Intended use

The **Purion 400** display is designed to display ride data on an eBike from the system generation **the smart system**.

So as to be able to use the **Purion 400** display fully, a compatible smartphone with the **eBike Flow** app is required.

Depending on the operating system of the smartphone, the **eBike Flow** app can be downloaded free of charge from the Apple App Store or Google Play Store.

Scan the code with your smartphone to download the **eBike Flow** app.

Instructions on how to use the **eBike Flow** app and more detailed information can be found at www.bosch-ebike.com/help-center.

The **Purion 400** display can only be used with eBikes with assistance up to **20 mph (32 km/h)**.

Technical Data

Display		Purion 400
Product code		BHU3500
Operating temperature [A)]	°F °C	+23 to +104 −5 to +40
Storage temperature	°F °C	+50 to +104 +10 to +40
Protection rating[B)]		IP55
Weight, approx.	lbs g	0.06 27

A) Temperatures outside of this range may cause faults in the display.

B) Any connection sockets on the **Purion 400** display that are not being used must be sealed with a blind plug.

The license information for the product is available at the following Internet address: www.bosch-ebike.com/licences

Operation

Note about the protective film

▸ **Before first use, remove the protective film from the display in order to ensure the full functionality of the display.** If the protective film remains on the display, this can impair the functionality/performance of the display.

The display can be operated using one of the control units shown. The functions of the buttons on the control units can be found in the following overview.

Depending on how long it is pressed for, the select button has 2 functions.

Note: The **Purion 400** display is not compatible with the **Purion 200** control unit.

5-button control unit

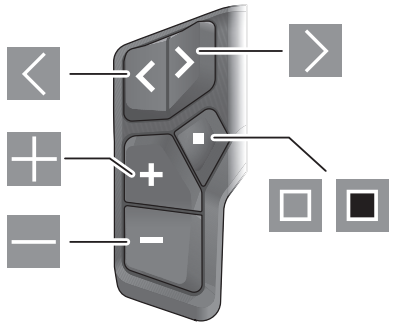

- Scroll to the left
- Scroll to the right
- Increase assistance level/scroll up
- Reduce assistance level/scroll down
- Open the select button/settings menu on the status screen (press briefly)
- Open the quick menu (from any screen except for the status screen) (press for > 1 s)

5-button control unit

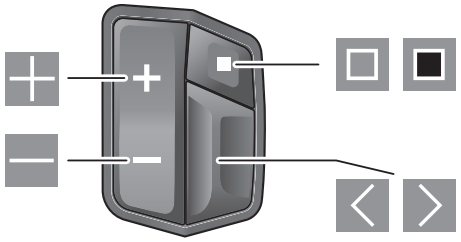

- / Toggle button: Scroll to the left/scroll to the right
- Increase assistance level/scroll up
- Reduce assistance level/scroll down
- Open the select button/settings menu on the status screen (press briefly)
- Open the quick menu (from any screen except for the status screen) (press for > 1 s)

3-button control unit

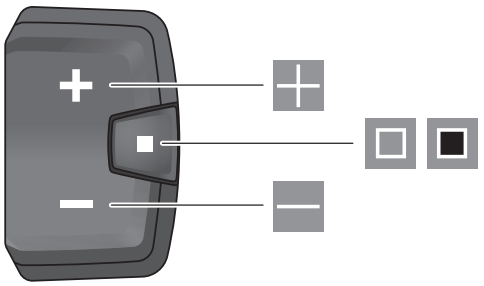

- Increase assistance level/scroll up
- Reduce assistance level/scroll down
- Select button/scroll through the screens (press briefly)
- Select button/open menu (press and hold > 1 s)

Navigating in the Menus

Briefly press the + button or the – button to navigate in the menus.

Briefly press the select button ▣ to select the relevant menu item.

You can go back a level by pressing and holding (> 1 s) the select button ▣.

Note: The information and fault codes can be acknowledged using the button ▣ on the control units shown.

Note: Improvements and added functionality are regularly introduced through software updates. Therefore, the displays and functions shown here may differ from what is actually displayed.

Start screen

If you did not select another screen before the last time you switched off, you will be shown this screen.

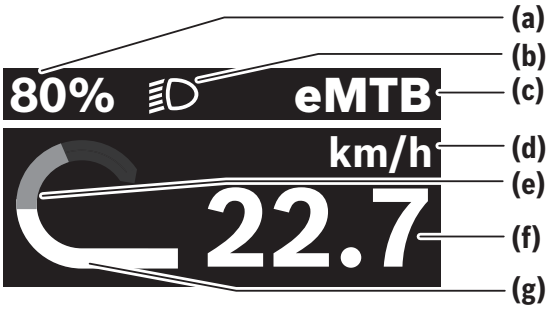

(a) State of charge of eBike battery (can be configured)

(b) Bicycle lights

(c) Riding mode

(d) Unit of speed indicator

(e) Your performance

(f) Speed

(g) Drive power

The indicators **(a)** to **(c)** form the statusbar and are shown on every screen.

You can access additional screens from the start screen. The statistical data, eBike battery range and average values are displayed on these screens.

If you are on a different screen to the start screen when the eBike is switched off, the most recently displayed screen will appear again when the eBike is switched on.



Press the ◁ button or ▷ button to scroll through the screens.



Press the toggle button to the left ◁ or to the right ▷ to scroll through the screens.



Briefly press the select button ▣ to scroll through the screens.

Quick menu

Selected settings are displayed on the quick menu. These settings can also be changed while riding.

You can access the quick menu by pressing and holding (> 1 s) the select button ▣.

It cannot be accessed from the status screen.

The following settings can be changed via the quick menu:

– **<ABS>** (optional)
  You can select an ABS mode here (if available).
– **<eShift>** (optional)
  The settings vary depending on the gearing in question. For example, you can set your cadence here, provided that the gearing supports this function.
– **<Ride>**
  All data on the distance traveled so far is reset to zero.
– **<Ride details>**
  All data on the distance traveled so far is reset to zero.

Note: Depending on the configuration of your eBike, additional functions may be available.

Status screen

From the start screen, you can access the status screen:

– By pressing the ◁ button or pressing the toggle button to the left ◁ (5-button control unit)
– By repeatedly pressing the ▣ button (3-button control unit)

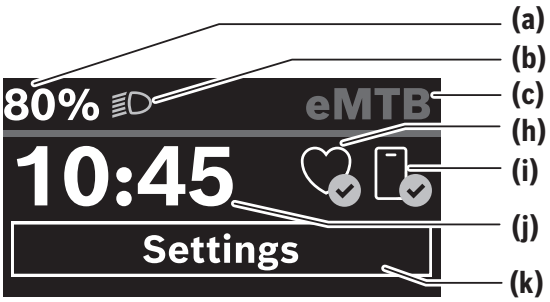

(a) State of charge of eBike battery (can be configured)
(b) Bicycle lights
(c) Riding mode
(h) Heart rate monitor connection status
(i) Smartphone connection status
(j) Time
(k) Settings menu

Accessing the Settings Menu

You can access the settings menu from the status screen.



Briefly press the select button ▣ to call up the settings menu.



Briefly press the select button ▣ to call up the settings menu.



Press and hold the select button ▣ > 1 s to call up the settings menu.

Note: The settings menu cannot be accessed while riding.

The **<Settings>** settings menu contains the following menu items:

– **<eBike>**
  You can find the following menu items here.
  ▪ **<ABS>** (optional)
    You can select an ABS mode here (if available).
  ▪ **<Shift recom.>** or **<eShift>** (optional)
    You can activate or deactivate the gear change recommendation here. Depending on whether you have eShift, you can, for example, set your cadence here, provided that the gearing supports this function. The settings are dependent on the respective gear-shifting.
  ▪ **<Components>**
    The components used with their version numbers are displayed here.
  ▪ **<Wheel circumference>**
    The value of the rear wheel circumference can be adjusted or reset to the standard setting here.
  ▪ **<Service>**
    The next service date is shown here, provided that it has been set by the service center.
– **<Display>**
  ▪ **<Statusbar>**
    You can choose between the **<Battery>**, **<Time>**, **<Speed>** or **<eShift>** (optional) displays here.
    Note: <eShift> is only possible in conjunction with a compatible eShift gear-shifting system.
  ▪ **<Tip>**
    You can activate or deactivate whether tips are displayed here.
  ▪ **<Trip summary>**
    You can activate or deactivate the summary of your ride when switching off here.
  ▪ **<Trick Check>**
    You can switch the trick check on and off here.
    Note: The availability of the function is dependent on the relevant drive unit.
  ▪ **<Brightness>**
    You can set the display brightness here.

  - **<Time>**
    You can set the time here.
  - **<Time format>**
    You can select one of the two time formats (12 h/24 h) here.
  - **<Language>**
    Here you can select a preferred language from the following languages:
    German, English, French, Dutch, Italian, Spanish, Portuguese, Danish, Swedish, Norwegian, Polish, Czech, Japanese, Traditional Chinese for Taiwan, Korean.
  - **<Units>**
    You can choose between metric or imperial units here.
- **<Sounds>**
  You can switch the notification tones for individual functions on and off here. You can also adjust the volume to **<High>**, **<Medium>**, **<Low>**, or switch off the buzzer completely with **<Off>**.
- **<Ride>**
  - **<Reset now>**
    All data on the distance traveled so far is reset to zero.
  - **<Autom. reset>**
    The trip meter reset time can be set here.
  - **<Range reset>**
    The value for the range can be reset here.
- **<eBike Flow>**
  The connection status of the **eBike Flow** app is displayed here.
- **<Information>**
  - **<Getting started>**
    You are shown a QR code that takes you to the Bosch eBike website. It has information about the first steps for handling your eBike components.
    Note: If you open the settings menu, this menu item will appear at the top. By selecting the **<Don't show again>** menu item, the **<Getting started>** menu item will be filed under **<Information>**.
  - **<Help Center>**
    It has information about how to contact the Bosch eBike Help Center with more detailed information about your eBike components.
  - **<Certificates>**
    You can find certificates and e-labels here.
- **<Settings reset>**
  You can reset all of the system settings to the default values here.

Leaving the Settings Menu

Press the select button ▣ to save the settings and leave the settings menu.



Press and hold the ▣ or ◁ button for more than 1 s to leave the settings menu without saving the settings.



Press and hold the ▣ button for more than 1 s or press the toggle button to the left ◁ to leave the settings menu without saving the settings.



Press and hold the ▣ button for more than 1 s to leave the settings menu without saving the settings.

eBike Lock

The **<eBike Lock>** can be set up for any eBike via the **eBike Flow** app under **<Settings>** → **<Lock & Alarm>**. You can define the smartphone as a digital key for unlocking the eBike.

How it works

In conjunction with **<eBike Lock>**, the smartphone works in a similar way to a key for the drive unit. The **<eBike Lock>** is activated by switching off the eBike. When switching on, the eBike checks if any pre-set key is available. A white LED flashes on the **LED Remote/LED Controller/System Controller** control unit, and a lock symbol is shown on the **Purion 400** display.

When the eBike is switched off, the drive unit will emit a "Lock" sound (i.e. an audio signal that is played **once**) to indicate that the assistance from the drive unit is switched off.

When the eBike is switched on, the drive unit will emit two "Unlock" sounds (i.e. an audio signal that is played **twice**) to indicate that the assistance from the drive unit is enabled again.

More information about this can be found in the **eBike Flow** app or in the Bosch eBike Help Center on the website www.bosch-ebike.com/help-center.

Battery Lock

In addition to the drive unit, the eBike battery can be locked when the eBike is switched off using **<Battery Lock>**.

You need a **Flow+ subscription** to activate **<Battery Lock>**. Fees may be payable for this.

Information about **Flow+ subscription** and details on individual services can be found in the **eBike Flow** app or in the Bosch eBike Help Center on the website www.bosch-ebike.com/help-center.

Maintenance and Service

Maintenance and cleaning

Do not clean any of the components with pressurized water.

Keep the display clean.

Clean your display using a soft cloth dampened only with water. Do not use cleaning products of any kind.

If you use a blind plug for the connection socket of the **Purion 400** display, regularly check that it is fitted securely. This ensures that no dirt or water gets in and damages the display.

Note: The display may fog up under certain temperature and humidity conditions. This is not an error. Put the eBike in a heated room.

Have your eBike checked by an expert at least once a year (including mechanical parts, up-to-dateness of system software).

In addition, the service center may enter the service date based on the distance traveled and/or on a period of time. In this case, each time the display is switched on, a message is shown telling you when the service date is due.

Please have your eBike serviced and repaired by a service center.

- ▸ **Please make sure you have all repairs carried out by a service center.**

Note: If you are handing in your eBike to a service center for maintenance, it is recommended that you deactivate **<Lock & Alarm>**.

After-sales service and advice on using products

If you have any questions about the eBike and its components, contact a service center.

For contact details of service centers, please visit www.bosch-ebike.com.

More information

More information and videos about the eBike components and their functions can be found in the Bosch eBike Help Center.

Recycling Program

The individual eBike components as well as accessories and packaging should be recycled in an environmentally friendly manner.

Do not dispose of eBikes and their components with household waste.

You may recycle your Bosch battery pack by calling 1.800.822.8837.

Robert Bosch GmbH
72757 Reutlingen
Germany

www.bosch-ebike.com

kontakt@bosch.de

0 275 U07 3BP (2026.02) T / 43

Kiox 300 | 500

BHU3600 | BHU3700



en Original operating instructions

This manual contains important safety, performance and service information. Read and understand it along with the information provided to you by your bicycle manufacturer before using the product, and keep it for reference.

Table of Contents

Introduction 2
About Warnings 2
General Warnings 2
Using your Manual 3
Operating your Bosch Display 4
Safety instructions 4
Product Description and Specifications 7
Assembly 9
Operation 10
Maintenance and servicing 15
Maintenance and cleaning 15
After-sales service and advice on using products 15
More information 15
Transport 15
Recycling Program 15

Introduction

About Warnings

This manual contains many **DANGER**, **WARNING**, and **CAUTION** indicators concerning the consequences of failure to use, assemble, maintain, store, inspect and dispose of a Bosch-equipped eBike in a safe manner.

– The combination of the safety alert symbol and the word **DANGER** indicates a hazardous situation that, if not avoided, will result in death or serious injury.
– The combination of the safety alert symbol and the word **WARNING** indicates a hazardous situation that, if not avoided, could result in death or serious injury.
– The combination of the safety alert symbol and the word **CAUTION** indicates a hazardous situation that, if not avoided, could result in minor or moderate injury.

General Warnings



Read all safety warnings and all instructions. Failure to follow the warnings and instructions may result in death or serious injury.

Save all safety warnings and instructions for future reference.

The term **eBike battery** used in these operating instructions refers to all original Bosch eBike batteries from the system generation **the smart system**.

▶ **Read ALL accompanying manuals before riding the bike for the first time.** Your Bosch Drive System comes with additional manuals and documents provided by the manufacturer of the bicycle and other components. Failure to read and understand safety information can result in death or serious injury.

⚠ WARNING

▶ **This manual contains important safety, performance and service information.** Read it before you take the first ride on your new bicycle, and keep it for reference. The manual can also be found online at www.bosch-ebike.com.

▶ **This manual is intended to be read together with the separate user manual provided with your bicycle.** Be sure to read all provided documents including labels on the product before your first ride.

▶ **Take responsibility for your own SAFETY.** If you have any questions or do not understand something, consult with your dealer or the bicycle or component manufacturer.

▶ **Some eBike accessories may present a choking hazard to small children.** Keep these accessories away from children.

⚠ CAUTION

▶ **The Bosch Drive System adds weight to your bicycle which you may not be used to lift.** Avoid injury, use proper lifting techniques.

Using your Manual

In addition to the functions outlined here, changes to software relating to troubleshooting and functional modifications may be introduced at any time.

Graphics

The bicycle shown in this manual may differ slightly from your bicycle, but will be similar enough to help you understand our instructions.

RIGHT-HAND and LEFT-HAND sides are determined by facing in the direction the bicycle will travel when going forward. When you see a broken line (------), the item referred to is hidden from view.

Operating your Bosch Display

Safety instructions



Read all the safety and general instructions. Failure to follow the warnings and instructions may result in electric shock, fire and/or serious injury.

Save all safety warnings and instructions for future reference.

The term **eBike battery** used in these operating instructions refers to all original Bosch eBike batteries from the system generation **the smart system**.

The terms **drive** and **drive unit** used in these operating instructions refer to all original Bosch drive units from the system generation **the smart system**.

- ▸ **Read and observe the safety warnings and instructions in all operating instructions of the eBike components and your eBike.**
- ▸ **Do not attempt to secure the display or control unit while riding.**
- ▸ **Do not allow yourself to be distracted by the display, particularly by text overlays shown according to the situation.** The display of riding information does not absolve the rider of the need to exercise due caution. If you do not focus exclusively on the traffic, you risk being involved in an accident. If you want to make entries in your display other than switching the riding mode, stop cycling and enter the relevant details.
- ▸ **Do not operate your smartphone during the journey.** If you do not concentrate exclusively on the traffic around you, you risk being involved in an accident. When using your smartphone, only enter the relevant data once you've stopped.
- ▸ **Set the display brightness such that you can adequately see important information like speed or warning symbols.** An incorrectly set display brightness can result in dangerous situations.
- ▸ **Do not open the display.** Opening the display can destroy it and void any warranty claims.
- ▸ **Do not use the display as a handle.** Lifting the eBike up by the display can cause irreparable damage to the display.
- ▸ **Do not stand your eBike upside down on its saddle and handlebars if the display or its holder protrude from the handlebars.** This may irreparably damage the display or the holder. Also remove the display before placing the eBike on a wall mount to ensure that the display does not fall off or become damaged.
- ▸ **The display Kiox 500 contains a buzzer. Loud audio signals may sound under certain circumstances. The loud sound can damage hearing.** It is therefore advisable to keep a sufficient distance from the display.
- ▸ **Do not enter information or make selections while riding.** Interacting with the display or control unit while riding can lead to accidents causing serious injury or death. You must observe road and traffic conditions, and comply with traffic laws at all times. If navigation directs you onto a trail or path that is unsafe or not permitted, stop and choose a safe, legal route.
- ▸ **Accessing other apps, reading pop up messages/other content, or otherwise using your mobile device while operating an eBike may be distracting. Distracted driving is a serious safety concern and can lead to accidents causing serious injury or death. In order to prevent distracted driving, most mobile devices come equipped with a “Do Not Disturb” mode. The “Do Not Disturb” mode should be used while operating an eBike.** Please consult your device-specific instructions for more information. You, as the eBike operator, are fully responsible for ensuring that you pay attention to road conditions and comply with traffic laws at all times.

- Please note that certain State or local laws may require that class III eBikes must be equipped with a functioning speedometer that displays speed in miles per hour. Riders must be aware of any and all applicable rules and regulations related to the operation or use of class III eBikes in any applicable jurisdictions before operating or otherwise using this product.

Safety Instructions in Conjunction with the Navigation System

- **Do not plan any routes while riding. Make sure that you come to a complete stop and only input a new destination while at a standstill.** If you do not concentrate exclusively on the traffic around you, you risk being involved in an accident.
- **Discontinue following your route if the navigation system suggests a path for you to take that may be risky or dangerous for you according to your capabilities as a rider.** Allow the navigation system to select an alternative route for you instead.
- **Make sure to observe all traffic signs regardless of the route proposed by the navigation system.** The navigation system is unable to take roadworks or temporary diversions into account.
- **Do not use the navigation system in circumstances where special attention must be given to safety, or if it is unclear how to proceed (road closures, diversions, etc.).** Always carry additional map sources and means of communication.
- **The navigation system instructs you to perform an unsafe or illegal maneuver.** Cancel the navigation system and choose an alternative route.
- **The navigation system directs you into an unsafe area.** Cancel the navigation system and choose an alternative route.
- **The navigation system does not direct you to the nearest emergency facility when needed.** Make an emergency call and inquire as to the quickest available route.
- **The location of the bicycle is indicated incorrectly by the navigation system.** Use a secondary source of information to determine where you are located currently.
- **The volume of the navigation system prevents you from hearing surrounding traffic while riding.** Ensure that you are able to perceive sounds from traffic in the vicinity at all times, so that you can react to potential dangers appropriately.
- NAVIGATION SERVICES ARE PROVIDED FOR PLANNING PURPOSES ONLY. INFORMATION FROM NAVIGATION SERVICES MAY DIFFER FROM ACTUAL CONDITIONS. USER MUST EXERCISE INDEPENDENT JUDGEMENT WHEN USING THE NAVIGATION SERVICES TO ENSURE THAT THE ROUTE PROVIDED BY THE NAVIGATION SERVICES IS SAFE AND APPROPRIATE FOR EBIKE USAGE.

NOTICE: This device complies with part 15 of the FCC Rules. Operation is subject to the following two conditions:

1. This device must not cause harmful interference, and
2. this device must accept any interference received, including interference that may cause undesired operation.

NOTICE: Changes or modifications made to this equipment not expressly approved by the Robert Bosch GmbH may void the FCC authorization to operate this equipment.

NOTE: This equipment has been tested and found to comply with the limits for a Class B digital device, pursuant to Part 15 of the FCC Rules. These limits are designed to provide reasonable protection against harmful interference in a residential installation. This equipment generates, uses and can radiate radio frequency energy and, if not installed and used in accordance with the instructions, may cause harmful interference to radio communications. However, there is no guarantee that interference will not occur in a particular installation. If this equipment does cause

harmful interference to radio or television reception, which can be determined by turning the equipment off and on, the user is encouraged to try to correct the interference by one or more of the following measures:

- Reorient or relocate the receiving antenna.
- Increase the separation between the equipment and receiver.
- Connect the equipment into an outlet on a circuit different from that to which the receiver is connected.
- Consult the dealer or an experienced radio/TV technician for help.

CAN ICES3(B)/NMB3(B)
Responsible Party for North-America:
Bosch eBike Systems Americas
Robert Bosch LLC
27211 Burbank, Foothill Ranch, CA 92610, USA,
www.bosch-ebike.com/us/

Privacy notice

When connecting the eBike to the **Bosch DiagnosticTool 3** or when exchanging eBike components, technical information about your eBike (e.g. bicycle manufacturer, model, bike ID, configuration data) as well as regarding the use of the eBike (e.g. total travel time, energy consumption, temperature) is transmitted to Bosch eBike Systems (Robert Bosch GmbH) for processing your request, in service cases and for the purposes of product improvement. You can find further information about data processing at www.bosch-ebike.com/privacy-full.

Note: To improve readability, some values are displayed without decimal places. These values have been rounded up or down.

Product Description and Specifications

Product Features Kiox

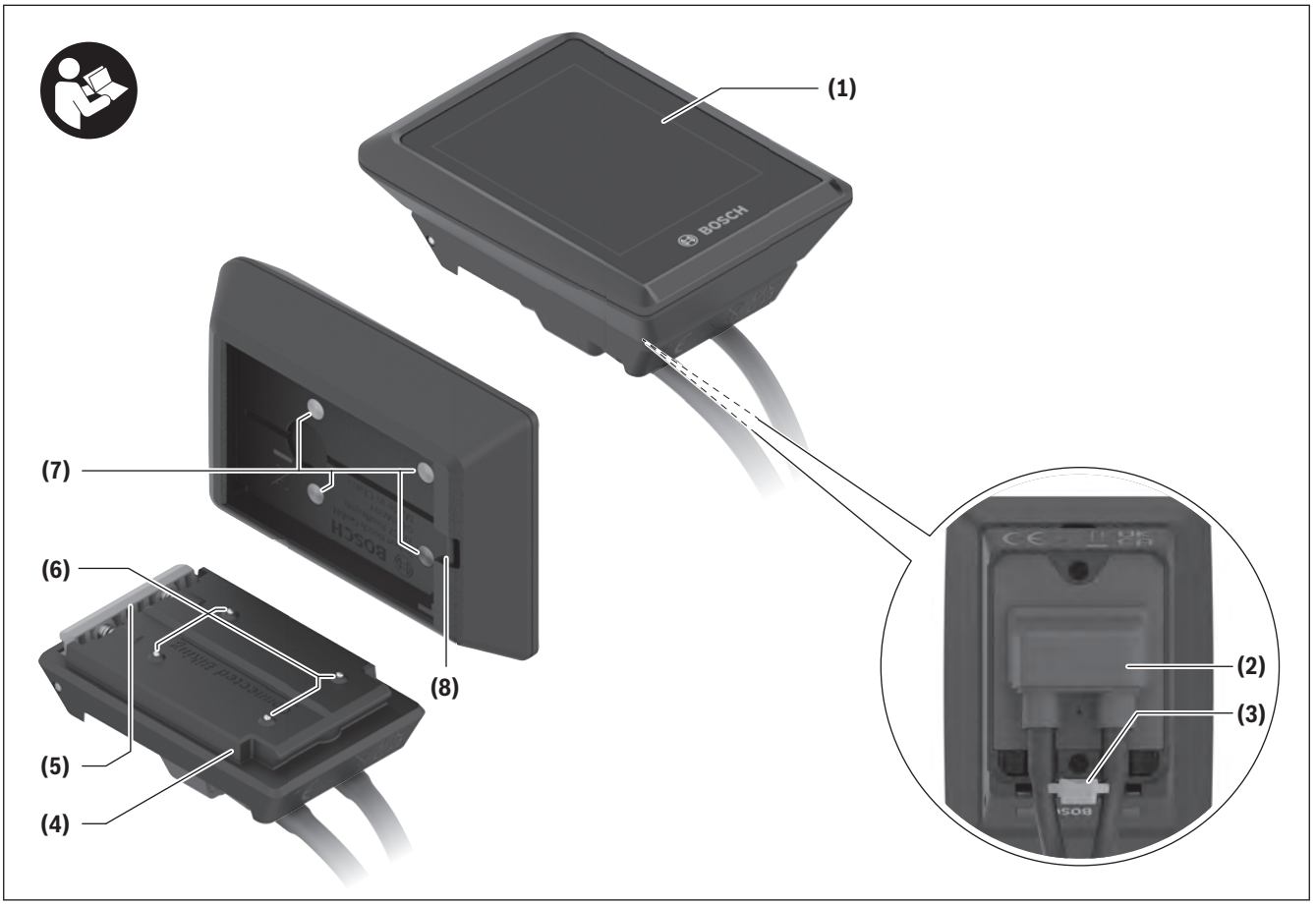

(1) Display
(2) Cable outlet
(3) Removal blocker
(4) Display mount
(5) Snap-in hook
(6) Holder contacts
(7) Display contacts
(8) Bridge for retaining strap[a)]
(9) Adapter tray
(10) Display mount fastening screw

a) Retaining strap is not included in the scope of delivery.

Intended use

The **Kiox 300/Kiox 500** display is designed to display ride data on an eBike from the system generation **the smart system**.

So as to be able to use the **Kiox 300/Kiox 500** display fully, a compatible smartphone with the **eBike Flow** app is required.

Depending on the operating system of the smartphone, the **eBike Flow** app can be downloaded free of charge from the Apple App Store or Google Play Store.

Scan the code with your smartphone to download the **eBike Flow** app.

Instructions on how to use the **eBike Flow** app and more detailed information can be found at www.bosch-ebike.com/help-center.

Technical data

Display		Kiox 300	Kiox 500
Product code		BHU3600	BHU3700
Operating temperature[A)]	°F °C	+23 to +104 −5 to +40	+23 to +104 −5 to +40
Storage temperature	°F °C	+50 to +104 +10 to +40	+50 to +104 +10 to +40
Protection rating		IP55	IP55
Weight, approx.	oz g	1.13 32	2.15 61

A) Temperatures outside of this range may cause faults in the display.

The license information for the product is available at the following Internet address: www.bosch-ebike.com/licences

Assembly

Fitting and Removing the Display

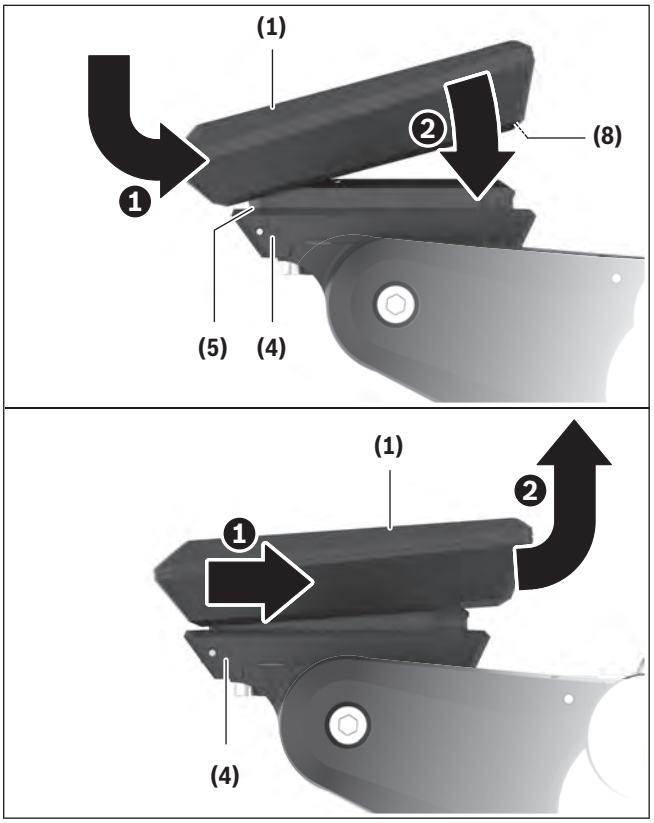

To **fit** the display **(1)**, attach it to the front edge of the display mount **(4)** in the direction of travel, on the snap-in hook **(5)** ❶ and press the rear side of the display **(1)** on the display mount **(4)** ❷.

To **remove** the display **(1)**, pull it towards you ❶ until you are able to lift off the display **(1)** ❷.

A retaining strap can be secured to the bridge **(8)**.

Note: The eBike switches off if you ride below **1.9 mph (3 km/h)** and take the display out of the holder. This does not apply to eBikes with assistance up to **28 mph (45 km/h)**.

Attaching the Removal Blocker

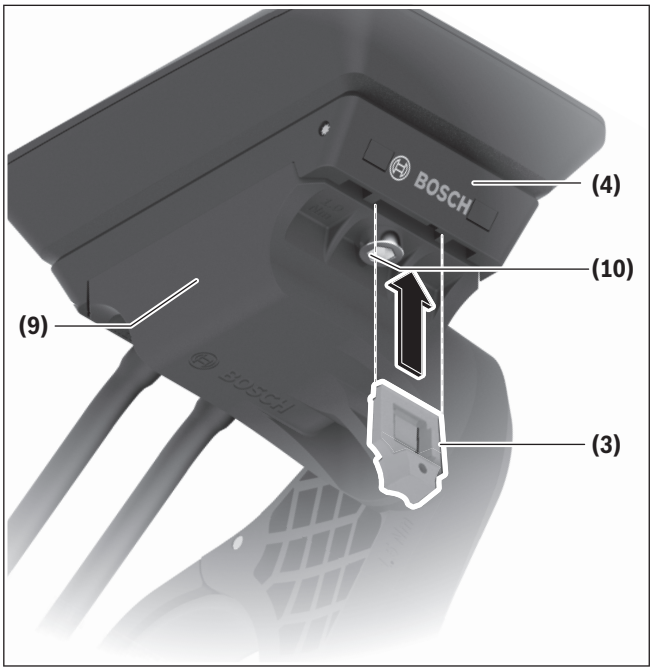

Note: Depending on the design/mounting of the display mount, it may not be possible to insert the removal blocker. The display must be mounted.

Insert the locking plate **(3)** into the adapter shell **(9)** from below until you hear the locking plate **(3)** click into place.

From this point onwards, you can no longer lift off the display **(1)** from the display mount **(4)** without removing the display mount **(4)** from the adapter tray **(9)** by loosening the two fastening screws **(10)**.

Note: The locking plate **(3)** is not an anti-theft device.

Note about the protective film

- ▸ **Before first use, remove the protective film from the display in order to ensure the full functionality of the display.** If the protective film remains on the display, this can impair the functionality/performance of the display.

Operation

The display can be operated using one of the control units shown. The functions of the buttons on the control units can be found in the following overview.

Depending on how long it is pressed for, the select button has 2 functions.

5-button control unit

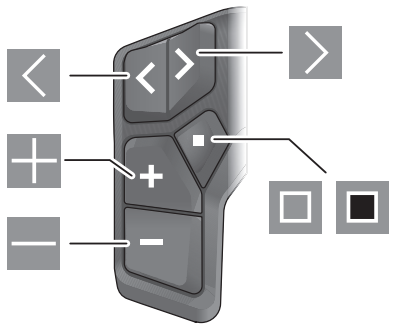

- Scroll to the left
- Scroll to the right
- Increase assistance level/scroll up
- Reduce assistance level/scroll down
- Open the select button/settings menu on the status screen (press briefly)
- Open the quick menu (from any screen except for the status screen) (press for > 1 s)

5-button control unit

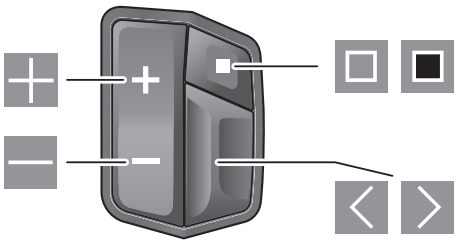

- / Toggle button: Scroll to the left/scroll to the right
- Increase assistance level/scroll up
- Reduce assistance level/scroll down
- Open the select button/settings menu on the status screen (press briefly)
- Open the quick menu (from any screen except for the status screen) (press for > 1 s)

3-button control unit

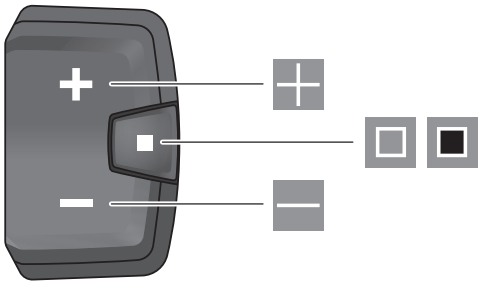

- Increase assistance level/scroll up
- Reduce assistance level/scroll down
- Select button/scroll through the screens (press briefly)
- Select button/open menu (press and hold > 1 s)

Navigating in the Menus

Briefly press the button or the button to navigate in the menus.

Briefly press the select button to select the relevant menu item.

You can go back a level by pressing and holding (> 1 s) the select button .

Note: The information and fault codes can be acknowledged using the button on the control units shown.

Note: Improvements and added functionality are regularly introduced through software updates. Therefore, the displays and functions shown here may differ from what is actually displayed.

Start screen

If you did not select another screen before the last time you switched off, you will be shown this screen when you switch on the eBike.

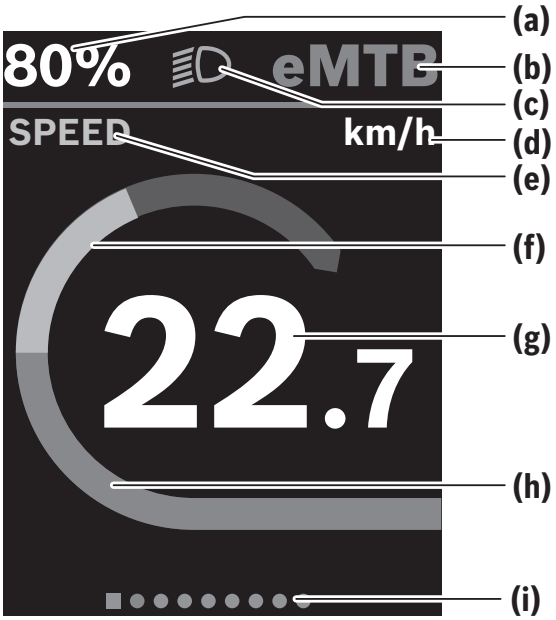

(a) State of charge of eBike battery (can be configured)
(b) Riding mode
(c) Bicycle lights
(d) Unit of speed indicator
(e) Indicator name
(f) Your performance
(g) Speed
(h) Drive power
(i) Navigation bar

The indicators **(a)** to **(c)** form the statusbar and are shown on every screen.

The navigation bar **(i)** appears briefly to indicate which screen you are on.

You can access additional screens from the start screen. The statistical data, eBike battery range and average values are displayed on these screens.

If you are on a different screen to the start screen when the eBike is switched off, the most recently displayed screen will appear again when the eBike is switched on.



Press the ◁ button or ▷ button to scroll through the screens.



Press the toggle button to the left ◁ or to the right ▷ to scroll through the screens.



Briefly press the select button ▣ to scroll through the screens.

Quick menu

Selected settings are displayed on the quick menu. These settings can also be changed while riding.

You can access the quick menu by pressing and holding (> 1 s) the select button ▣.

It cannot be accessed from the status screen.

The following settings can be changed via the quick menu:

- **<ABS>** (optional)
  You can select an ABS mode here (if available).
- **<eShift>** (optional)
  The settings vary depending on the gearing in question. For example, you can set your cadence here, provided that the gearing supports this function.
- **<Navigation>**
  You can select your recent destinations as a new destination and/or end the running navigation.
- **<Ride>**
  All data on the distance traveled so far is reset to zero.
- **<Ride details>**
  All data on the distance traveled so far is reset to zero.

Note: Depending on the configuration of your eBike, additional functions may be available.

Status screen

From the start screen, you can access the status screen:

- By pressing the ◁ button or pressing the toggle button to the left ◁ (5-button control unit)

– By repeatedly pressing the ▣ button (3-button control unit)

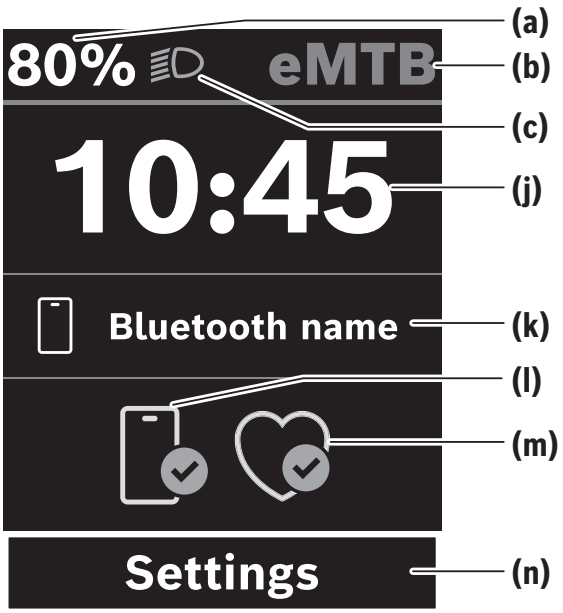

(a) State of charge of eBike battery (can be configured)
(b) Riding mode
(c) Bicycle lights
(j) Time
(k) Connected smartphone
(l) Smartphone connection status
(m) Heart rate monitor connection status
(n) Settings menu

Accessing the Settings Menu

You can access the settings menu from the status screen.



Briefly press the select button ▣ to call up the settings menu.



Briefly press the select button ▣ to call up the settings menu.



Press and hold the select button ▣ > 1 s to call up the settings menu.

Note: The settings menu cannot be accessed while riding.

The **<Settings>** settings menu contains the following menu items:

– **<eBike>**
  You can find the following menu items here.
  ▪ **<ABS>** (optional)
    You can select an ABS mode here (if available).
  ▪ **<Shift recommendation>** or **<eShift>** (optional)
    You can activate or deactivate the gear change recommendation here. Depending on whether you have eShift, you can, for example, set your cadence here, provided that the gearing supports this function. The settings are dependent on the respective gear-shifting.
  ▪ **<Components>**
    The components used with their version numbers are displayed here.
  ▪ **<Wheel circumference>**
    The value of the rear wheel circumference can be adjusted or reset to the standard setting here.
  ▪ **<Service>**
    The next service date is shown here, provided that it has been set by the service center.
– **<Display>**
  ▪ **<Statusbar>**
    You can choose between the **<Battery>**, **<Time>**, **<Speed>** or **<eShift>** (optional) displays here.
    Note: <eShift> is only possible in conjunction with a compatible eShift gear-shifting system.
    Note: This function is not available for eBikes with a support level up to **28 mph (45 km/h)**.
  ▪ **<Tip>**
    You can activate or deactivate whether tips are displayed here.
  ▪ **<Trip summary>**
    You can activate or deactivate the summary of your ride when switching off here.
  ▪ **<Trick Check>**
    You can switch the trick check on and off here.

Note: The availability of the function is dependent on the relevant drive unit.

- **<Brightness>**
  You can set the display brightness here.
- **<Time>**
  You can set the time here.
- **<Time format>**
  You can select one of the two time formats (12 h/24 h) here.
- **<Language>**
  Here you can select a preferred language from the following languages:
  German, English, French, Dutch, Italian, Spanish, Portuguese, Danish, Swedish, Norwegian, Polish, Czech, Japanese, Traditional Chinese for Taiwan, Korean.
- **<Units>**
  You can choose between metric or imperial units here.

– **<Sounds>** (**Kiox 500** only)
You can switch the notification tones for individual functions on and off here. You can also adjust the volume to **<High>**, **<Medium>**, **<Low>**, or switch off the buzzer completely with **<Off>**.

– **<Ride>**
- **<Reset now>**
  All data on the distance traveled so far is reset to zero.
- **<Autom. reset>**
  The trip meter reset time can be set here.
- **<Range reset>**
  The value for the range can be reset here.

– **<eBike Flow>**
The connection status of the **eBike Flow** app is displayed here.

– **<Information>**
- **<Getting started>**
  You are shown a QR code that takes you to the Bosch eBike website. It has information about the first steps for handling your eBike components.
  Note: If you open the settings menu, this menu item will appear at the top. By selecting the **<Don't show again>** menu item, the **<Getting started>** menu item will be filed under **<Information>**.
- **<Help Center>**
  It has information about how to contact the Bosch eBike Help Center with more detailed information about your eBike components.
- **<Certificates>**
  You can find certificates and e-labels here.

– **<Settings reset>**
You can reset all of the system settings to the default values here.

Leaving the Settings Menu

Press the select button ▣ to save the settings and leave the settings menu.



Press and hold the ▣ or ◩ button for more than 1 s to leave the settings menu without saving the settings.



Press and hold the ▣ button for more than one second or press the toggle button to the left ◩ to leave the settings menu without saving the settings.



Press and hold the ▣ button for more than 1 s to leave the settings menu without saving the settings.

Display configuration

<Display configuration> can be found in the **eBike Flow** app under **<Settings>**. The eBike must be switched on and the smartphone must be connected.

The content shown on your display can be customized via **<Display configuration>**:
– Change the order of individual screens
– Add new screens
– Edit and partially delete existing screens
– Add new screens after an update

You can find further information on **<Display configuration>** at any time in the **eBike Flow** app.

Navigation

The navigation function on the **Kiox 300/Kiox 500** assists you when exploring unfamiliar areas. You can start navigation on your smartphone in the **eBike Flow** app. You need the latest software version in order to use navigation. To do this, keep your **eBike Flow** app and your eBike up to date.

The route guidance and navigation information (e.g. turn-by-turn instructions) are shown on the display.

Note: Please note that the activities can only be recorded and navigation with **Kiox 300/Kiox 500** can only be ensured with the smartphone system setting “Always allow” activated for location data. The “While using the app” setting is not sufficient due to smartphone operating systems.

eBike Lock

The **<eBike Lock>** can be set up for any eBike via the **eBike Flow** app under **<Settings>** → **<Lock & Alarm>**. The smartphone and **Kiox 300/Kiox 500** display can be set as digital keys for unlocking the eBike.

How it works

In combination with the **<eBike Lock>**, the smartphone and the display work like a key for the drive unit. The **<eBike Lock>** is activated by switching off the eBike. When switching on, the eBike checks if any pre-set key is available. A white LED flashes on the **LED Remote/LED Controller/System Controller** control unit, and a lock symbol is shown on the **Purion 200/Kiox 400C** control unit and on the **Kiox 300/Kiox 500** display.

When the eBike is switched off, the drive unit will emit a "Lock" sound (i.e. an audio signal that is played **once**) to indicate that the assistance from the drive unit is switched off.

When the eBike is switched on, the drive unit will emit two "Unlock" sounds (i.e. an audio signal that is played **twice**) to indicate that the assistance from the drive unit is enabled again.

More information about this can be found in the **eBike Flow** app or in the Bosch eBike Help Center on the website www.bosch-ebike.com/help-center.

Battery Lock

In addition to the drive unit, the eBike battery can be locked when the eBike is switched off using **<Battery Lock>**.

You need a **Flow+ subscription** to activate **<Battery Lock>**. Fees may be payable for this.

Information about **Flow+ subscription** and details on individual services can be found in the **eBike Flow** app or in the Bosch eBike Help Center on the website www.bosch-ebike.com/help-center.

Maintenance and servicing

Maintenance and cleaning

Do not clean any of the components with pressurized water.

Keep the display clean.

Clean your display using a soft cloth dampened only with water. Do not use cleaning products of any kind.

Note: The display may fog up under certain temperature and humidity conditions. This is not an error. Put the display in a heated room and leave it to dry.

Have your eBike checked by an expert at least once a year (including mechanical parts, up-to-dateness of system software).

In addition, the service center may enter the service date based on the distance traveled and/or on a period of time. In this case, each time the display is switched on, a message is shown telling you when the service date is due.

Please have your eBike serviced and repaired by a service center.

- ▸ **Please make sure you have all repairs carried out by a service center.**

Note: If you are handing in your eBike to a service center for maintenance, it is recommended that you deactivate **<Lock & Alarm>**.

After-sales service and advice on using products

If you have any questions about the eBike and its components, contact a service center.

For contact details of service centers, please visit www.bosch-ebike.com.

More information

More information and videos about the eBike components and their functions can be found in the Bosch eBike Help Center.

Transport

- ▸ **If you transport your eBike attached to the outside of your car, e.g. on a bike rack, remove the display and the eBike battery (exception: Built-in eBike battery) to avoid damaging them.**

Recycling Program

The individual eBike components as well as accessories and packaging should be recycled in an environmentally friendly manner.

Do not dispose of eBikes and their components with household waste.

You may recycle your Bosch battery pack by calling 1.800.822.8837.

Robert Bosch GmbH
72757 Reutlingen
Germany

www.bosch-ebike.com

kontakt@bosch.de

0 275 U07 3BK (2026.02) T / 50

Kiox 400C | Mini Remote | Mini Remote Dropbar

BRC3200 | BRC3300 | BRC3310



en Original operating instructions

This manual contains important safety, performance and service information. Read and understand it along with the information provided to you by your bicycle manufacturer before using the product, and keep it for reference.

Table of Contents

Introduction 2
About Warnings 2
General Warnings 2
Using your Manual 3
Operating the Control Unit 4
Safety instructions 4
Product Description and Specifications 9
Operation 13
Establishing a smartphone connection 21
Troubleshooting 24
Maintenance and Service 27
Maintenance and Cleaning 27
After-sales service and advice on using products 27
More information 27
Recycling Program 27

Introduction

About Warnings

This manual contains many **DANGER**, **WARNING**, and **CAUTION** indicators concerning the consequences of failure to use, assemble, maintain, store, inspect and dispose of a Bosch-equipped eBike in a safe manner.

– The combination of the safety alert symbol and the word **DANGER** indicates a hazardous situation that, if not avoided, will result in death or serious injury.
– The combination of the safety alert symbol and the word **WARNING** indicates a hazardous situation that, if not avoided, could result in death or serious injury.
– The combination of the safety alert symbol and the word **CAUTION** indicates a hazardous situation that, if not avoided, could result in minor or moderate injury.

General Warnings



Read all safety warnings and all instructions. Failure to follow the warnings and instructions may result in death or serious injury.

Save all safety warnings and instructions for future reference.

The term **eBike battery** used in these operating instructions refers to all original Bosch eBike batteries from the system generation **the smart system**.

▶ **Read ALL accompanying manuals before riding the bike for the first time.** Your Bosch Drive System comes with additional manuals and documents provided by the manufacturer of the bicycle and other components. Failure to read and understand safety information can result in death or serious injury.

⚠ WARNING

▶ **This manual contains important safety, performance and service information.** Read it before you take the first ride on your new bicycle, and keep it for reference. The manual can also be found online at www.bosch-ebike.com.

▶ **This manual is intended to be read together with the separate user manual provided with your bicycle.** Be sure to read all provided documents including labels on the product before your first ride.

▶ **Take responsibility for your own SAFETY.** If you have any questions or do not understand something, consult with your dealer or the bicycle or component manufacturer.

▶ **Some eBike accessories may present a choking hazard to small children.** Keep these accessories away from children.

⚠ CAUTION

▶ **The Bosch Drive System adds weight to your bicycle which you may not be used to lift.** Avoid injury, use proper lifting techniques.

Using your Manual

In addition to the functions outlined here, changes to software relating to troubleshooting and functional modifications may be introduced at any time.

Graphics

The bicycle shown in this manual may differ slightly from your bicycle, but will be similar enough to help you understand our instructions.

RIGHT-HAND and LEFT-HAND sides are determined by facing in the direction the bicycle will travel when going forward. When you see a broken line (------), the item referred to is hidden from view.

Operating the Control Unit

Safety instructions



Read all the safety and general instructions. Failure to follow the warnings and instructions may result in electric shock, fire and/or serious injury.

Save all safety warnings and instructions for future reference.

The term **eBike battery** used in these operating instructions refers to all original Bosch eBike batteries from the system generation **the smart system**.

The terms **drive** and **drive unit** used in these operating instructions refer to all original Bosch drive units from the system generation **the smart system**.

- ▸ **Read and observe the safety warnings and instructions in all operating instructions of the eBike components and your eBike.**
- ▸ **Do not allow yourself to be distracted by the control unit's display, particularly by text overlays shown according to the situation.** The display of riding information does not absolve the rider of the need to exercise due caution. If you do not focus exclusively on the traffic, you risk being involved in an accident. If you want to change settings on your control unit, beyond just changing the riding mode, stop cycling to do so.
- ▸ **Set the display brightness such that you can adequately see important information like speed or warning symbols.** An incorrectly set display brightness can result in dangerous situations.
- ▸ **Do not attempt to fix display or control unit while riding!**
- ▸ **Do not enter information or make selections while riding.** Interacting with the display or control unit while riding can lead to accidents causing serious injury or death. You must observe road and traffic conditions, and comply with traffic laws at all times. If navigation directs you onto a trail or path that is unsafe or not permitted, stop and choose a safe, legal route.
- ▸ **Be aware that by selecting the drive mode you will also influence the amount of motor support from your bike.** Choose a drive mode that fits your cycling skills, test and familiarize yourself with drive modes and features in each mode before use.
- ▸ **The walk assistance function must only be used when pushing the eBike.** There is a risk of injury if the wheels of the eBike are not in contact with the ground while using the walk assistance.
- ▸ **When the walk assistance is activated, the pedals may turn at the same time.** When the walk assistance function is activated, make sure that there is enough space between your legs and the turning pedals to avoid the risk of injury.
- ▸ **When using the walk assistance, make sure that you can control the eBike and that you can hold it securely at all times.** Under certain circumstances, the walk assistance may stop (e.g. if the pedals hit an obstacle or if you accidentally let go of the button on the control unit). The eBike may suddenly move backwards onto you or tip up. This poses a particular risk for you if there is an additional load. When using the walk assistance, do not bring the eBike into situations in which you cannot hold the eBike using your own strength.
- ▸ **Do not stand your eBike upside down on its handlebars and saddle if the control unit or its holder protrude from the handlebars.** This may irreparably damage the control unit or the holder.
- ▸ **Do not connect a charger to the eBike battery if the control unit or the display reports a critical error.** This may result in damage to your eBike battery. The eBike battery may catch fire, thereby resulting in serious burns and other injuries.
- ▸ **The control unit Kiox 400C contains a buzzer. Loud audio signals may sound under certain cir-**

cumstances. The loud sound can damage hearing. It is therefore advisable to keep a sufficient distance from the control unit.

- ▶ **The control unit features a wireless interface. Local operating restrictions, e.g. in airplanes or hospitals, must be adhered to.**
- ▶ **Caution!** When using the control unit with *Bluetooth*®, this may cause interference that affects other devices and systems, airplanes and medical devices (e.g. pacemakers, hearing aids). Similarly, the possibility that this may cause damage to humans and animals in the immediate vicinity cannot be completely excluded. Do not use the control unit with *Bluetooth*® in the vicinity of medical devices, gas stations, chemical plants, areas with a potentially explosive atmosphere or on blast sites. Do not use the control unit with *Bluetooth*® in airplanes. Avoid using the device in close proximity to your body over an extended period of time.
- ▶ The *Bluetooth*® wordmark and its logos are the registered trademarks and property of Bluetooth SIG, Inc. Any use of this wordmark/these logos by Robert Bosch GmbH, Bosch eBike Systems is under license.
- ▶ **Observe all national regulations which set out the approved use of eBikes.**
- ▶ **Caution lithium battery!** Do not store batteries in an environment with extremely high temperatures or extremely low air pressure, this can lead to an explosion or leakage of flammable liquids or gases. Do not dispose the battery in your regular household trash or a public trash receptacle. Batteries that enter the regular waste stream can be damaged, leading to a fire resulting in serious injury, death, property damage and environmental contamination. Recycle the battery at an authorized recycling center or take them to a local household hazardous waste disposal facility.
- ▶ **Choose the USB charging cable length appropriately.** USB charging cable length must not be long enough to catch in handlebar or front wheel. This is important to prevent personal injury.
- ▶ **Only charge end devices that is compatible with the specified values (current and voltage) and use appropriately rated USB cable.** USB cable not appropriately rated for the application may result in fire or personal injury.
- ▶ Before using the control unit while riding, make sure to familiarize yourself with control unit controls and functions by reviewing the operating instructions in this user manual. Practice riding under traffic-free conditions and make sure that you are comfortable using the control unit before using it in traffic.
- ▶ Do not use the control unit while riding if you are not comfortable doing so. Do not allow yourself to be distracted by the control unit. Please note that distracted riding can lead to serious injury, up to and including death. Riders must observe road and traffic conditions and comply with all applicable traffic laws at all times.
- ▶ Please note that certain State or local laws may require that class III eBikes must be equipped with a functioning speedometer that displays speed in miles per hour. Riders must be aware of any and all applicable rules and regulations related to the operation or use of class III eBikes in any applicable jurisdictions before operating or otherwise using this product.

Safety Instructions in Conjunction with the Navigation System

- **Do not plan any routes while riding. Make sure that you come to a complete stop and only input a new destination while at a standstill.** If you do not concentrate exclusively on the traffic around you, you risk being involved in an accident.
- **Discontinue following your route if the navigation system suggests a path for you to take that may be risky or dangerous for you according to your capabilities as a rider.** Allow the navigation system to select an alternative route for you instead.
- **Make sure to observe all traffic signs regardless of the route proposed by the navigation system.** The navigation system is unable to take roadworks or temporary diversions into account.
- **Do not use the navigation system in circumstances where special attention must be given to safety, or if it is unclear how to proceed (road closures, diversions, etc.).** Always carry additional map sources and means of communication.
- **The navigation system instructs you to perform an unsafe or illegal maneuver.** Cancel the navigation system and choose an alternative route.
- **The navigation system directs you into an unsafe area.** Cancel the navigation system and choose an alternative route.
- **The navigation system does not direct you to the nearest emergency facility when needed.** Make an emergency call and inquire as to the quickest available route.
- **The location of the bicycle is indicated incorrectly by the navigation system.** Use a secondary source of information to determine where you are located currently.
- **The volume of the navigation system prevents you from hearing surrounding traffic while riding.** Ensure that you are able to perceive sounds from traffic in the vicinity at all times, so that you can react to potential dangers appropriately.
- NAVIGATION SERVICES ARE PROVIDED FOR PLANNING PURPOSES ONLY. INFORMATION FROM NAVIGATION SERVICES MAY DIFFER FROM ACTUAL CONDITIONS. USER MUST EXERCISE INDEPENDENT JUDGEMENT WHEN USING THE NAVIGATION SERVICES TO ENSURE THAT THE ROUTE PROVIDED BY THE NAVIGATION SERVICES IS SAFE AND APPROPRIATE FOR EBIKE USAGE.

Safety warnings for charging the battery inside the control unit

- **Only charge the control unit with USB power source (5 V, 500 mA max) and USB cable rated at least 500 mA.** Using USB power source or USB cable not appropriately rated for the application may result in fire, explosion or personal injury.
- **Charge the control unit in temperatures above +32 degrees F (0 degrees C) and below +104 degrees F (40 degrees C). Store control unit in locations where temperatures will not exceed 104 degrees F (40 degrees C).** This is important to prevent serious damage to the battery in the control unit.
- **Do not expose control unit to fire or excessive temperature.** Exposure to fire or temperature above 212 °F (100 °C) may cause explosion.
- **Do not recharge the control unit (via USB port) in damp or wet environment.** Water entering control unit may result in electric shock or fire.
- **Never submerge control unit in fluid of any kind or allow fluid to enter them.** Corrosive or conductive fluid (such as seawater or industrial chemical or bleach containing products, etc.) can cause short circuit which may result in fire, personal injury and property damage.
- **Battery leakage may occur under extreme usage or temperature conditions. Avoid contact with skin and eyes.** The battery liquid is caustic and could cause chemical burns to tissues. If liquid comes in contact with skin, wash quickly with soap and water. If the liquid contacts your eyes, immedi-

ately flush eyes with water for a minimum of 15 minutes and seek medical attention.

- ▸ **Before each use, check the control unit, cable and plug.** If damage is detected, do not use the control unit. Damaged control unit, charging cables and plugs increase the risk of a fire, explosion and personal injury.
- ▸ **Do not disassemble control unit.** No user serviceable part inside. Incorrect reassembly or damage may result in fire or explosion.

Safety instructions for button/coin cells



⚠ WARNING

INGESTION HAZARD:
This product contains a button cell or coin battery.
DEATH or serious injury can occur if ingested.
A swallowed button cell or coin battery can cause **Internal Chemical Burns** in as little as **2 hours**.
KEEP new and used batteries **OUT OF REACH of CHILDREN**.
Seek immediate medical attention if a battery is suspected to be swallowed or inserted inside any part of the body.
Remove and immediately recycle or dispose of used batteries according to local regulations and keep away from children. Do NOT dispose of batteries in household trash or incinerate.
Even used batteries may cause severe injury or death. Call a local poison control center for treatment information.
Non-rechargeable batteries are not to be recharged. Do not force discharge, recharge, disassemble, heat above 104 °F (40 °C) or incinerate. Doing so may result in injury due to venting, leakage or explosion resulting in chemical burns.
Ensure the batteries are installed correctly according to polarity (+ and −).
Do not mix old and new batteries, different brands or types of batteries, such as alkaline, carbon-zinc, or rechargeable batteries.
Remove and immediately recycle or dispose of batteries from equipment not used for an extended period of time according to local regulations.
Always completely secure the battery compartment. If the battery compartment does not close securely, stop using the product, remove the batteries, and keep them away from children.

- ▸ **Only use the button/coin cells listed in this operating manual.** Do not use any other button/coin cells or other forms of electrical power supply.
- ▸ **Do not damage the button/coin cell and or take the button/coin cell apart.** The button/coin cell may leak, explode, catch fire and cause personal injury.
- ▸ **Do not allow damaged button/coin cells to come into contact with water.** Leaking lithium may mix with water to create hydrogen, which could cause a fire, an explosion, or personal injury.

NOTICE: This device complies with part 15 of the FCC Rules. Operation is subject to the following two conditions:

1. This device must not cause harmful interference, and
2. this device must accept any interference received, including interference that may cause undesired operation.

NOTICE: Changes or modifications made to this equipment not expressly approved by the Robert Bosch GmbH may void the FCC authorization to operate this equipment.

NOTE: This equipment has been tested and found to comply with the limits for a Class B digital device, pursuant to Part 15 of the FCC Rules. These limits are designed to provide reasonable protection against harmful interference in a residential installation. This equipment generates, uses and can radiate radio frequency energy and, if not installed and used in accordance with the instructions, may cause harmful interference to radio communications. However, there is no guarantee that interference will not occur in a par-

ticular installation. If this equipment does cause harmful interference to radio or television reception, which can be determined by turning the equipment off and on, the user is encouraged to try to correct the interference by one or more of the following measures:

- Reorient or relocate the receiving antenna.
- Increase the separation between the equipment and receiver.
- Connect the equipment into an outlet on a circuit different from that to which the receiver is connected.
- Consult the dealer or an experienced radio/TV technician for help.

Radiofrequency radiation exposure Information:
The radiated output power of the device is far below the FCC radio frequency exposure limits. Nevertheless, the device shall be used in such a manner that the potential for human contact during normal operation is minimized.

This equipment complies with FCC radiation exposure limits set forth for an uncontrolled environment into portable exposure conditions without distance restrictions. This transmitter must not be co-located or operating in conjunction with any other antenna or transmitter.

ISED Notice (Canada)

This device contains licence-exempt transmitter(s)/ receiver(s) that comply with Innovation, Science and Economic Development Canada's licence-exempt RSS(s). Operation is subject to the following two conditions:

1. this device may not cause interference, and
2. this device must accept any interference, including interference that may cause undesired operation of the device.

This equipment complies with Canada radiation exposure limits set forth for an uncontrolled environment into portable exposure conditions without distance restrictions. This transmitter must not be co-located or operating in conjunction with any other antenna or transmitter.

Privacy notice

When connecting the eBike to the **Bosch DiagnosticTool 3** or when exchanging eBike components, technical information about your eBike (e.g. bicycle manufacturer, model, bike ID, configuration data) as well as regarding the use of the eBike (e.g. total travel time, energy consumption, temperature) is transmitted to Bosch eBike Systems (Robert Bosch GmbH) for processing your request, in service cases and for the purposes of product improvement. You can find further information about data processing at www.bosch-ebike.com/privacy-full.

Note: To improve readability, some values are displayed without decimal places. These values have been rounded up or down.

Product Description and Specifications

Product Features

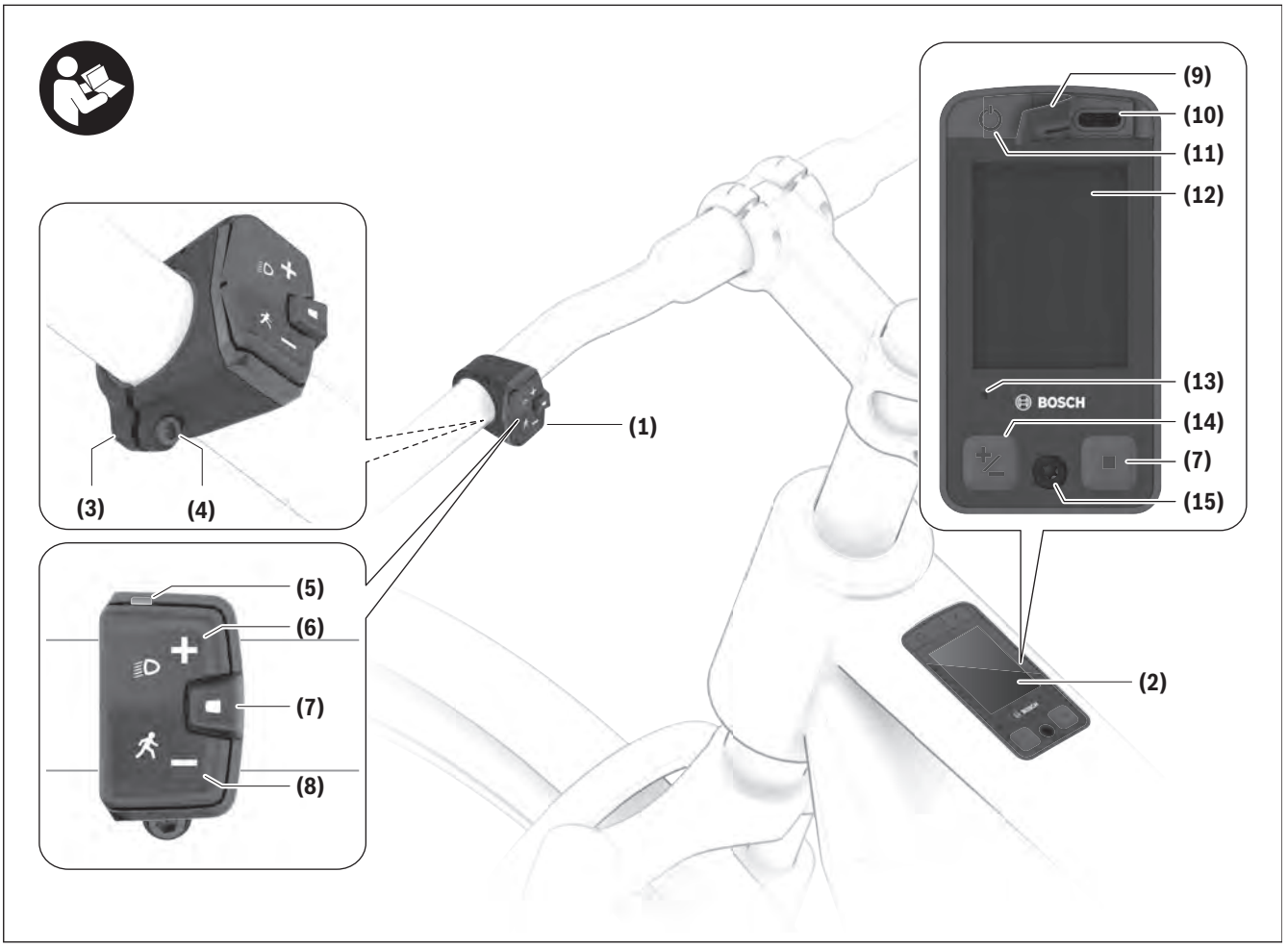

All illustrations of bike parts except for the drive unit, display (including control unit), speed sensor, and the corresponding holders are a schematic representation and may differ on your eBike.

(1) **Mini Remote/Mini Remote Dropbar** control unit
(2) **Kiox 400C** control unit
(3) Holder
(4) Fastening screw for holder
(5) LED indicator light
(6) Button for increasing the assistance level **+**/ bicycle lights
(7) Select button
(8) Button for reducing the assistance level **–**/ walk assistance/hill-start assist
(9) Protective cap for charging connection
(10) Charging connection
(11) On/off button
(12) Display
(13) Ambient light sensor
(14) Mode button
(15) Fastening screw **Kiox 400C**
(16) Metal tab

(17) Battery cover
(18) Fastening screw for the metal tab

Intended Use

The **Kiox 400C** and **Mini Remote/Mini Remote Dropbar** control units are designed for controlling an eBike and, as an option, for controlling an additional display from the system generation **the smart system** (e.g. **Kiox 500**). If you use your smartphone as a display, you can use the **Kiox 400C** control unit in combination with the **Mini Remote/Mini Remote Dropbar** control unit to also control the **eBike Flow** app.

In order to be able to use the control unit to its fullest extent, a compatible smartphone with the **eBike Flow** app is required.

You can connect the **Kiox 400C** control unit with your smartphone via *Bluetooth*®.

Depending on the operating system of the smartphone, the **eBike Flow** app can be downloaded free of charge from the Apple App Store or Google Play Store.

Scan the code with your smartphone to download the **eBike Flow** app.

Technical Data

Control unit		Kiox 400C
Product code		BRC3200
Max. input charging current of USB port[A)]	mA	600
Max. output charging current of USB port[B)]	A	2
USB port voltage	V	5
USB charging cable [C)]		USB Type-C® [D)]
Charging connection		USB Type-C® [D)]
Internal lithium-ion battery	V mAh	3.7 75
Charging temperature	°F °C	+32 to +104 0 to +40
Operating temperature	°F °C	+23 to +104 −5 to +40
Storage temperature	°F °C	+50 to +104 +10 to +40
Protection rating[E)]		IP55
Dimensions	in mm	1.7 × 3.4 × 0.8 44 × 86 × 20
Weight	lbs g	0.13 57
Bluetooth® Low Energy 5.0		
– Frequency	MHz	2400–2480
– Transmission power	mW	1

A) Information about charging the **Kiox 400C** control unit

B) Information about charging external devices

C) Not included with the product as standard

D) USB Type-C® and USB-C® are trademarks of USB Implementers Forum.

E) only applies when the protective cap of the charging port is closed

Control unit		Mini Remote	Mini Remote Dropbar
Product code		BRC3300	BRC3310
Operating temperature	°F °C	+23 to +104 −5 to +40	+23 to +104 −5 to +40
Storage temperature	°F °C	+50 to +104 +10 to +40	+50 to +104 +10 to +40
Battery		3 V, 1 × CR1620	3 V, 1 × CR1620
Protection rating		IP55	IP55
Dimensions	in mm	1.6 × 1.5 × 0.9 40 × 39 × 22	2.0 × 1.8 × 0.9 50 × 46 × 22
Weight	lbs g	0.04 16	0.04 20
Bluetooth® Low Energy 5.0			
– Frequency	MHz	2400–2480	2400–2480
– Transmission power	mW	≤ 1.9	≤ 1.9

The license information for the product is available at the following Internet address: www.bosch-ebike.com/licences

Certification information

Certification numbers (e-labels) can be found in the status screen under **<Settings>** → **<Information>** → **<Certificates>**. Scroll through all e-labels by briefly pressing the select button **(7)**.

Note: If you wish to access information from the e-label of the **Kiox 400C** control unit, you may first have to remove any additional display or, if using a smartphone, close the ride screen in the **eBike Flow** app.

Operation

Requirements

The eBike can then only be switched on when the following requirements are met:

- A sufficiently charged eBike battery is inserted (see operating instructions for the eBike battery from the system generation **the smart system**).
- The speed sensor, if provided, is connected properly (see operating instructions for the drive unit from the system generation **the smart system**).

Note about the protective film

▸ **Before first use, remove the protective film from the display in order to ensure the full functionality of the control unit.** If the protective film remains on the display, this can impair the functionality/performance of the control unit.

Control Unit Power Supply (Kiox 400C)

If a sufficiently charged eBike battery is inserted into the eBike and the eBike is switched on, the internal battery of the control unit is powered and charged.

If the internal battery of the control unit is very low and if it is no longer possible to switch on the eBike after a long downtime, you can charge the internal battery via the charging port **(10)** using a USB Type-C® cable with a power bank or USB charger.

Charging External End Devices

The charging port **(10)** is also designed for charging compatible end devices.

Note: Please note that, depending on how the eBike components are assembled, charging may not be possible or only to a limited extent.

To do this, switch on the eBike, open the protective cap **(9)** of the charging port **(10)** and connect the end device.

▸ **The USB Type-C® cable can get caught in the front wheel while riding. This can lead to accidents with unforeseeable consequences.** Before traveling, make sure that all cables are packed away neatly.

When charging, observe the following instructions:

- Only charge in dry conditions.
- Only charge one end device at a time.
- Check that the charging connection is clean before connecting it.
- Make sure that the end device is compatible with the specified values (current and voltage).
- Depending on the charging power, having end devices connected may impact the range.
- Always close the protective cap **(9)** on the charging connection **(10)** when you are not using it to charge external end devices so that no dust or moisture can enter.

Control Unit (Mini Remote/Mini Remote Dropbar) Power Supply

The **Mini Remote/Mini Remote Dropbar** control unit is supplied with energy by a CR1620 coin cell.

Replacing the Coin Cell (Mini Remote/Mini Remote Dropbar)

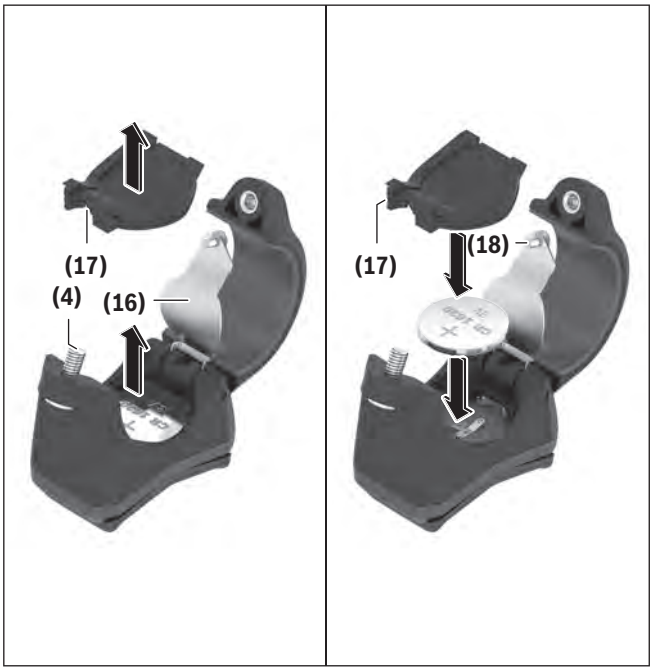

If the coin cell of the **Mini Remote/Mini Remote Dropbar** control unit **(1)** is running low, the LED indicator light **(5)** will flash orange.

To replace the coin cell, open the fastening screw for the holder **(4)** with a hex key (3 mm) and remove the **Mini Remote/Mini Remote Dropbar** control unit from the handlebars.

Open the metal tab **(16)** with a cross-headed screwdriver and remove the battery cover **(17)**.

Remove the used coin cell and insert a new type CR1620 coin cell into the battery compartment with the label facing upwards. The LED indicator light **(5)** will flash green to indicate that the coin cell has been inserted correctly.

Close the battery compartment with the battery cover **(17)**. Check that the battery cover **(17)** is correctly inserted to ensure that the battery compartment is closed securely.

Close the metal tab **(16)** again by carefully tightening the fastening screw for the metal tab **(18)** (approx. 0.11 lb ft [0.15 Nm]). Then secure the **Mini Remote/Mini Remote Dropbar** control unit back onto the handlebars.

Note: Carefully tighten the fastening screw for the holder **(4)** (approx. 0.4 lb ft [0.6 Nm]).

Note: The connection to the **Kiox 400C** is not interrupted when the coin cell is changed.

Switching the eBike on/off

To **switch on** the eBike, briefly press the ON/OFF button **(11)** on the **Kiox 400C** control unit. The eBike is ready to ride once the start-up animation is complete.

The display brightness is controlled by the ambient light sensor **(13)**. Therefore, do not cover the ambient light sensor **(13)**.

The drive is activated as soon as you start pedaling (except in the **OFF** riding mode). The drive power varies depending on the riding mode set.

As soon as you stop in normal operation, press the pedals, or as soon as you have reached a speed of **20/28 mph (32/45 km/h)**, the assistance will be switched off by the drive. The drive is automatically reactivated as soon as you press the pedals and the speed is below **20/28 mph (32/45 km/h)**.

To **switch off** the eBike, press the on/off button **(11)** briefly (< 3 s).

If no power is requested from the drive for approx. **10** minutes (e.g. due to the eBike being stationary) and no button is pressed, the eBike switches off automatically.

Note: If the **eBike Flow** app is open in the foreground, the eBike will not switch off automatically.

Operation

The functions of the buttons on the **Kiox 400C** control unit and on the **Mini Remote/Mini Remote Dropbar** control unit can be found in the following overview.

Depending on how long it is pressed for, the select button has 2 functions.

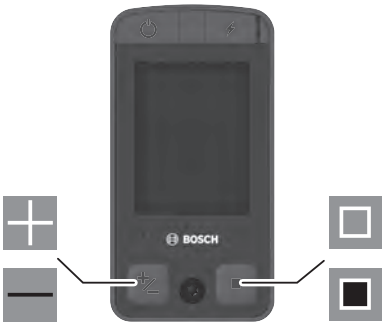

- Increase assistance level (press briefly < 1 s)
- Reduce assistance level (press and hold > 1 s)
- Confirm selection/scroll right (press briefly < 1 s)
- Open quick menu (press and hold > 1 s)

3-button control unit

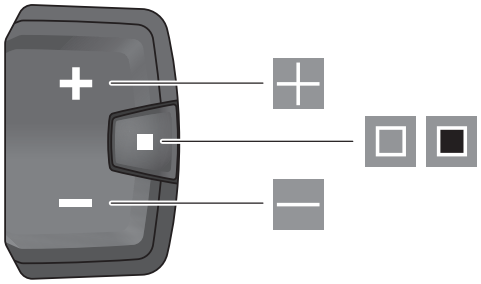

- Increase assistance level/scroll up
- Reduce assistance level/scroll down
- Select button/scroll through the screens (press briefly)
- Select button/open menu (press and hold > 1 s)

Navigating in the Menus

Briefly press the button or the button to navigate in the menus.

Briefly press the select button to select the relevant menu item.

You can go back a level by pressing and holding (> 1 s) the select button.

Note: The information and fault codes can be acknowledged using the button.

Note: Improvements and added functionality are regularly introduced through software updates. Therefore, the displays and functions shown here may differ from what is actually displayed.

Start screen

If you did not select another screen before the last time you switched off, you will be shown this screen when you switch on the eBike.

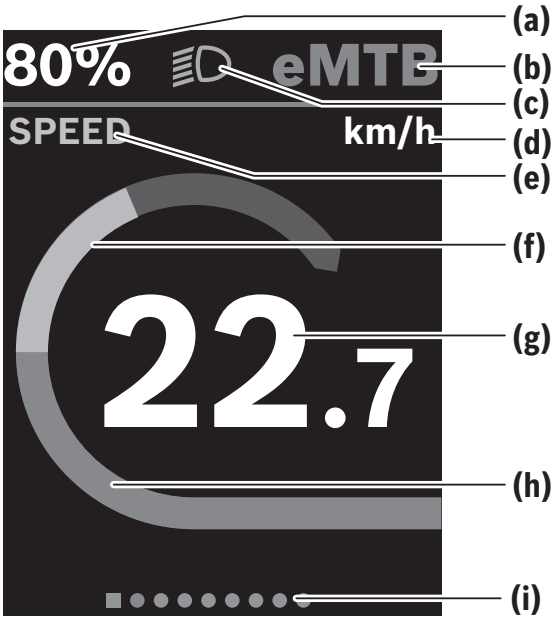

- **(a)** State of charge of eBike battery (can be configured)
- **(b)** Riding mode
- **(c)** Bicycle lights
- **(d)** Unit of speed indicator
- **(e)** Indicator name
- **(f)** Your performance
- **(g)** Speed
- **(h)** Drive power
- **(i)** Navigation bar

The indicators **(a)** to **(c)** form the statusbar and are shown on every screen.

The navigation bar **(i)** appears briefly to indicate which screen you are on.

If you are on a different screen to the start screen when the eBike is switched off, the most recently displayed screen will appear again when the eBike is switched on.

You can access additional screens from the start screen. The statistical data, eBike battery range and average values are displayed on these screens.

Briefly press the select button to scroll through the screens.

Quick menu

Selected settings are displayed on the quick menu. These settings can also be changed while riding.

You can access the quick menu by pressing and holding (> 1 s) the select button ▣.

It cannot be accessed from the status screen.

The following settings can be changed via the quick menu:

– **<ABS>** (optional)
  You can select an ABS mode here (if available).
– **<eShift>** (optional)
  The settings vary depending on the gearing in question. For example, you can set your cadence here, provided that the gearing supports this function.
– **<Navigation>**
  You can select your recent destinations as a new destination and/or end the running navigation.
– **<Ride>**
  All data on the distance traveled so far is reset to zero.
– **<Ride details>**
  All data on the distance traveled so far is reset to zero.

Note: Depending on the configuration of your eBike, additional functions may be available.

Status Screen

From the start screen, you can access the status screen via the select button ▣ (press briefly < 1 s).

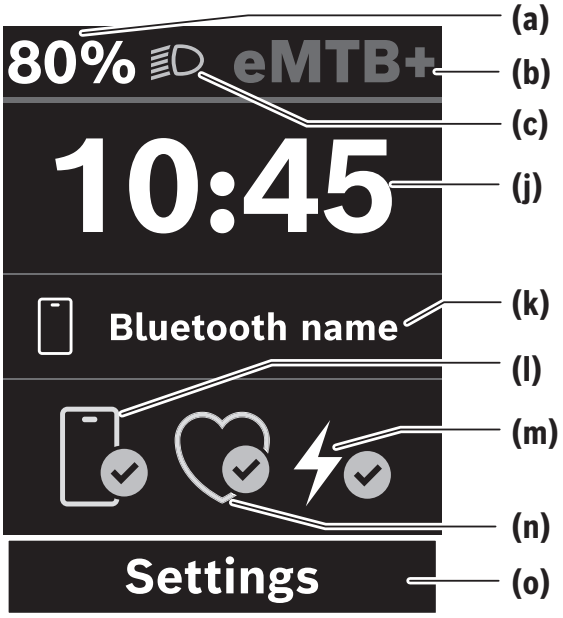

(a) State of charge of eBike battery (can be configured)
(b) Riding mode
(c) Bicycle lights
(j) Time
(k) Connected smartphone
(l) Smartphone connection status
(m) Charge indicator for external devices
(n) Heart rate monitor connection status
(o) Settings menu

Accessing the Settings Menu

You can access the settings menu from the status screen.

Press and hold the select button ▣ > 1 s to call up the settings menu.

Note: The settings menu cannot be accessed while riding.

The **<Settings>** settings menu contains the following menu items:

– **<eBike>**
  You can find the following menu items here.
  ▪ **<ABS>** (optional)
    You can select an ABS mode here (if available).

- **<Shift recommendation>** or **<eShift>** (optional)
  You can activate or deactivate the gear change recommendation here. Depending on whether you have eShift, you can, for example, set your cadence here, provided that the gearing supports this function. The settings are dependent on the respective gear-shifting.
- **<Components>**
  The components used with their version numbers are displayed here.
- **<Wheel circumference>**
  The value of the rear wheel circumference can be adjusted or reset to the standard setting here.
- **<Service>**
  The next service date is shown here, provided that it has been set by the service center.

– **<Display>**
- **<Statusbar>**
  You can choose between the **<Battery>**, **<Time>**, **<Speed>** or **<eShift>** (optional) displays here.
  Note: <eShift> is only possible in conjunction with a compatible eShift gear-shifting system.
  Note: This function is not available for eBikes with a support level up to **28 mph (45 km/h)**.
- **<Tip>**
  You can activate or deactivate whether tips are displayed here.
- **<Trip summary>**
  You can activate or deactivate the summary of your ride when switching off here.
- **<Trick Check>**
  You can switch the trick check on and off here.
  Note: The availability of the function is dependent on the relevant drive unit.
- **<Brightness>**
  You can set the display brightness here.
- **<Time>**
  You can set the time here.
- **<Time format>**
  You can select one of the two time formats (12 h/24 h) here.
- **<Language>**
  Here you can select a preferred language from the following languages:
  German, English, French, Dutch, Italian, Spanish, Portuguese, Danish, Swedish, Norwegian, Polish, Czech, Japanese, Traditional Chinese for Taiwan, Korean.
- **<Units>**
  You can choose between metric or imperial units here.

– **<Sounds>**
  You can switch the notification tones for individual functions on and off here. You can also adjust the volume to **<High>**, **<Medium>**, **<Low>**, or switch off the buzzer completely with **<Off>**.

– **<Ride>**
- **<Reset now>**
  All data on the distance traveled so far is reset to zero.
- **<Autom. reset>**
  The trip meter reset time can be set here.
- **<Range reset>**
  The value for the range can be reset here.

– **<eBike Flow>**
  The connection status of the **eBike Flow** app is displayed here.

– **<Information>**
- **<Getting started>**
  You are shown a QR code that takes you to the Bosch eBike website. It has information about the first steps for handling your eBike components.
  Note: If you open the settings menu, this menu item will appear at the top. By selecting the **<Don't show again>** menu item, the **<Getting started>** menu item will be filed under **<Information>**.
- **<Help Center>**
  It has information about how to contact the Bosch

eBike Help Center with more detailed information about your eBike components.

- **<Certificates>**
  You can find certificates and e-labels here.

– **<Settings reset>**
  You can reset all of the system settings to the default values here.

Leaving the Settings Menu

Briefly press the ▣ select button to save the settings and leave the settings menu.

Press and hold the ▣ select button for more than 1 s to leave the settings menu without saving the settings.

Display configuration

<Display configuration> can be found in the **eBike Flow** app under **<Settings>**. The eBike must be switched on and the smartphone must be connected.

The content shown on your display can be customized via **<Display configuration>**:

– Change the order of individual screens
– Add new screens
– Edit and partially delete existing screens
– Add new screens after an update

You can find further information on **<Display configuration>** at any time in the **eBike Flow** app.

Selecting the Riding Mode

On the control unit, you can set the level of assistance you want the drive to provide you with while pedaling.

Mini Remote/Mini Remote Dropbar: Briefly press (< 1 s) the buttons to increase the assistance level **+ (6)** or to reduce the assistance level **– (8)** in order to increase or decrease the assistance accordingly.

Kiox 400C: Briefly press (< 1 s) the mode button **(14)** to increase the assistance.

Press the mode button **(14)** for longer than 1 s to decrease the assistance.

The riding mode can be changed even while cycling, and is displayed in color.

Note: The riding modes available depend on the respective drive unit. The intensity and duration of the assistance vary depending on the riding mode.

Riding mode	Notes
OFF	Drive assistance is switched off. The eBike can just be moved by pedaling, as with a normal bicycle.
ECO	Effective assistance with maximum efficiency, for maximum range
ECO+	Range-optimized riding mode that only switches on the drive assistance above a certain rider performance; for natural cycling and for a maximum range
TOUR	Steady assistance, long range for touring
TOUR+	Dynamic assistance for natural, sporty cycling
eMTB[A)]	Optimal assistance whatever the terrain, rapid acceleration when starting from a standstill, improved dynamics and top performance including “Extended Boost”
eMTB+[A)]	Dynamic support to the maximum – to the perfect level and with up to 100 % more "Extended Boost" – for even more fun on trails
SPORT	Powerful assistance, for mountain biking and for cycling in urban traffic
TURBO	Maximum assistance even at a high cadence, for biking sports
AUTO	The assistance adapts dynamically to the riding situation.
RACE[A)]	Maximum assistance on the eMTB racetrack; very quick response and maximum "Extended Boost" for the best possible performance in competitive situations
CARGO	Steady, powerful assistance for safely transporting heavy weights

Riding mode	Notes
SPRINT	Dynamic assistance according to cadence – for athletic eGravel and eRoad cycling with rapid sprints and frequent ascents

A) The "Extended Boost" provides a controlled pushing force over a short distance once pedaling is stopped.

Adjusting the Riding Mode

The riding modes can be adapted within certain limits using the **eBike Flow** app. This gives you the option of adjusting your eBike to your personal requirements.

It is not possible to create a completely new riding mode. You can only adjust the riding modes that have been enabled by the bicycle manufacturer on your system.

In addition, restrictions in your country may mean that it is not possible to adjust a particular riding mode.

The following parameters are available for making adjustments:

– Assistance in relation to the base value of the riding mode (within the legal requirements)
– Drive response
– Top limit speed (within the legal requirements)
– Maximum torque (within the limits of the drive)

Note: Please ensure that your modified riding mode retains the position, name and color on all displays and controls.

Interaction of the drive unit with the gear-shifting

You should shift through gears on an eBike in the same manner as when using a normal bicycle (observe the operating instructions of your eBike with regard to this point).

Irrespective of the type of gear shifting, it is advisable that you briefly reduce the pressure on the pedals when changing gear. This will aid gear shifting and reduce wear on the powertrain.

By selecting the correct gear, you can increase your speed and range while applying the same amount of force.

For this reason, follow the gear change recommendations shown on your display.

Switching Bicycle Lights On and Off (Mini Remote/Mini Remote Dropbar only)

Before starting each journey, check that your bike lights are working correctly.

To **switch on/off** the bike lights, press and hold the bicycle lights **(6)** button for more than 1 s.

Switching the walk assistance on/off

The walk assistance can make it easier for you to push the eBike. The maximum speed of the walk assistance is **2.5 mph (4 km/h)**. The bicycle manufacturer can adjust the default so that it is lower and, if necessary, it can also be adjusted by a service center.

- ▶ **The walk assistance function must only be used when pushing the eBike.** There is a risk of injury if the wheels of the eBike are not in contact with the ground while using the walk assistance.
- ▶ **If the selected gear is too high, the drive unit may not be able to move the eBike or activate the roll-away lock.**

Note: The walk assistance function is deactivated in the **OFF** riding mode.

To **activate** walk assistance, press and hold the walk assistance button **(8)** for more than 1 s.

The drive begins to push and the walk assistance is shown on the display.

If you release the walk assistance **(8)** button, walk assistance is stopped. You can reactivate walk assistance straight away by pressing the walk assistance **(8)** button within 10 s.

If you do not reactivate walk assistance within 10 s, walk assistance automatically switches off.

Walk assistance is always ended if

– The rear wheel jams,
– The bicycle cannot move over ridges,

– A body part is blocking the bike crank,
– An obstacle continues to turn the crank,
– You start pedaling,
– The increase assistance level **+**/bicycle lights **(6)** button or on/off button **(11)** is pressed.

Walk assistance has a roll-away lock, i.e. even after walk assistance has been used, rolling backwards is actively curbed by the drive for a few seconds, and you cannot push the eBike backwards or can only do so with difficulty.

The roll-away lock is immediately deactivated by pressing the increase assistance level **+**/bicycle lights **(6)** button.

The walk assistance function is subject to local regulations; the way it works may therefore differ from the description above. It can also be deactivated.

Switching Hill-Start Assist On and Off

Hill-start assist makes it easier to start riding on hills.

To **activate** hill-start assist, place your foot on the pedal so that your eBike detects that you would like to start riding. Then press the hill-start assist button **(8)** for more than 1 s.

Note: Follow the order for actions when activating the hill-start assist button. The walk assistance will activate if you first press the hill-start assist button **(8)** and then place your foot on the pedal.

Once you have successfully activated hill-start assist, let go of the hill-start assist button **(8)** again. Once you have safely started riding, the hill-start assist will deactivate automatically and you will continue riding in the set riding mode. You can end hill-start assist at any time by taking your foot off the pedal.

You can then reactivate hill-start assist within 10 s by placing your foot back on the pedal. This will be shown on your display. It is not necessary to press the hill-start assist button **(8)** again. If you press the hill-start assist button **(8)** within 10 s, the countdown will be reset once and you will again have 10 s to activate hill-start assist.

Hill-start assist has a roll-away lock, i.e. even after hill-start assist has been used, rolling backwards is actively curbed by the drive for a few seconds, and this prevents the eBike from rolling backwards unintentionally.

The hill-start assist function is subject to local regulations; the way it works may therefore differ from the description above, or the function may even be deactivated completely.

ABS – Anti-lock braking system (optional)

If the eBike is fitted with a Bosch eBike ABS from the system generation **the smart system**, the ABS symbol lights up when the eBike system starts.

After moving off, the ABS internally checks its functionality and the ABS symbol goes off.

In the event of an error, the ABS symbol lights up and a message appears on the control unit. This means that the ABS is inactive. You can press the select button **(7)** to acknowledge the error and the ABS error message disappears. The ABS symbol appears in the statusbar to notify you that the ABS is still switched off.

For details on the ABS and how it works, including how it acts during a trick, please refer to the ABS operating instructions.

Establishing a smartphone connection

In order to be able to use the following eBike functions, a smartphone with the **eBike Flow** app is required.

Connection to the app occurs via a *Bluetooth*® connection.

Switch on the eBike and wait for the starting animation. Do not ride the eBike.

Begin *Bluetooth*® pairing by pressing and holding (> 3 s) the on/off button **(11)**. When the status of the pairing process is displayed, release the on/off button **(11)**.

Confirm the connection request in the app.

Connecting the Kiox 400C to the Mini Remote/Mini Remote Dropbar

The **Kiox 400C** control unit and the **Mini Remote/ Mini Remote Dropbar** control unit are connected via *Bluetooth*®.

Switch the eBike on and do not ride.

If the **Mini Remote/Mini Remote Dropbar** control unit has not already been connected to the **Kiox 400C** by the specialist retailer, proceed as follows:

1. First, connect your smartphone to the **Kiox 400C** via the **eBike Flow** app (see "Establishing a smartphone connection", page English – 21).
2. In the **eBike Flow** app, select **<Settings>** → **<eBike pass>** → **<Components>** → **<Add new device>**. Then select **<Mini Remote/Mini Remote Dropbar>**.
3. **Mini Remote/Mini Remote Dropbar**: Start the pairing process by pressing any button until the pairing process is shown by the LED indicator light flashing blue.
4. Follow the instructions in the **eBike Flow** app.

If pairing is successful, this is shown within 30 s on the **Mini Remote/Mini Remote Dropbar** control unit by the LED indicator light flashing green three times.

If the connection cannot be established, this is shown by the LED indicator light flashing red three times. Repeat the connection process.

If you want to connect the **Mini Remote/Mini Remote Dropbar** control unit to a **Kiox 400C** on another eBike, the following steps must be carried out:

1. First, connect your smartphone to the **Kiox 400C** via the **eBike Flow** app (see "Establishing a smartphone connection", page English – 21).
2. In the **eBike Flow** app, select **<Settings>** → **<eBike pass>** → **<Components>** → **<Add new device>**. Then select **<Mini Remote/Mini Remote Dropbar>**.
3. **Mini Remote/Mini Remote Dropbar**: Remove the coin cell from the **Mini Remote/Mini Remote Dropbar** control unit and wait for at least 30 s. Reinsert the coin cell and wait until the LED indicator light flashes green.
4. Within the next 10 s, press and hold the decrease assistance level button **– (8)** for 5 s.
   The pairing process is shown by the LED indicator light flashing blue for 30 s.
5. Follow the instructions in the **eBike Flow** app.
   If pairing is successful, this is shown within 30 s on the **Mini Remote/Mini Remote Dropbar** control unit by the LED indicator light flashing green three times. If the connection cannot be established, this is shown by the LED indicator light flashing red three times. Repeat the process again from step 2.

Software updates

Software updates must be manually started in the **eBike Flow** app.

Software updates are transferred to the control unit in the background of the app as soon as it is connected to the app. During the software update, keep watching the display on the control unit **Kiox 400C**. The eBike is then restarted.

You can control the software updates via the **eBike Flow** app.

Navigation

The navigation function on the **Kiox 400C** assists you when exploring unfamiliar areas. You can start navigation on your smartphone in the **eBike Flow** app. You need the current software version in order to use navigation. To do this, keep your **eBike Flow** app and your eBike up to date.

The route guidance and navigation information (e.g. turn-by-turn instructions) are shown on the display.

Note: Please note that the activities can only be recorded and navigation with **Kiox 400C** can only be ensured with the smartphone system setting “Always allow” activated for location data. The “While using the app” setting is not sufficient due to smartphone operating systems.

Activity tracking and digital eBike garage

In order to record activities, it is necessary to register and log into the **eBike Flow** app.

To record activities, you must consent to the storage of your location data in the app. Without this, your activities cannot be recorded in the app. For location data to be recorded, you must be logged in to a user account.

You can add a total of six eBikes to one user account in the **eBike Flow** app.

eBike Lock

The **<eBike Lock>** can be set up for any eBike via the **eBike Flow** app under **<Settings>** → **<Lock & Alarm>**. In the process, a key for unlocking the eBike is saved on the smartphone and/or the **Kiox 300/ Kiox 500** display.

The **<eBike Lock>** is automatically enabled in the following cases:

– The eBike is switched off via the control unit
– The eBike is switched off automatically

If the eBike is switched on and the smartphone is connected to the eBike via *Bluetooth*®, or the pre-set display is fitted in the holder, the eBike will be unlocked.

<eBike Lock> is linked to your **user account**.

If you lose your smartphone, you can log in to your user account on the **eBike Flow** app using another smartphone and then unlock the eBike.

If the display is lost, you can reset all the digital keys in the **<Lock & Alarm>** menu item in the **eBike Flow** app.

Caution! If you select a setting in the app that could have negative consequences in combination with the **<eBike Lock>** (e.g. deleting your eBike or user account), you will be shown warning messages beforehand. **Please read through these thoroughly and adhere to the warnings that are issued (e.g. before deleting your eBike or user account).**

Compatibility

The **<eBike Lock>** is compatible with all Bosch drive units from the system generation **the smart system**.

How it works

In combination with the **<eBike Lock>**, the smartphone and the display work like a key for the drive unit. The **<eBike Lock>** is activated by switching off the eBike. When switching on, the eBike checks if any pre-set key is available. This is indicated by a padlock symbol on the **Kiox 400C** control unit.

Note: The **<eBike Lock>** alone does not provide adequate theft protection; it is simply a supplement to a mechanical lock. The **<eBike Lock>** does not provide any form of mechanical lock for the eBike. Only the assistance from the drive unit is deactivated. The drive unit will be unlocked for as long as the smartphone is connected to the eBike via *Bluetooth*® or the display is placed in the holder.

If you want to give third parties temporary or permanent access to your eBike, share one of the pre-set digital keys (display/smartphone). As a result, the <eBike Lock> is still active. If you want to take your eBike to a service, the <eBike Lock> can be

deactivated in the eBike Flow app in the <Settings> menu item. If you wish to sell your eBike, you will also need to delete the eBike from your user account in the **eBike Flow** app in the **<Settings>** menu item.

When the eBike is switched off, the drive unit will emit a "Lock" sound (i.e. an audio signal that is played **once**) to indicate that the assistance from the drive unit is switched off.

When the eBike is switched on, the drive unit will emit two "Unlock" sounds (i.e. an audio signal that is played **twice**) to indicate that the assistance from the drive unit is enabled again.

The "Lock" sound will help you determine whether or not the **<eBike Lock>** on your eBike is active. The audio signal is activated by default, but it can be deactivated in the **eBike Flow** app in the **<Locking sound>** menu item by selecting the lock symbol under your eBike.

Note: If you can no longer set up or switch off the **<eBike Lock>**, please contact your service center.

Replacing the Smartphone

1. Install the **eBike Flow** app on the new smartphone.
2. Log in with **the same** user account that was used to activate the **<eBike Lock>**.
3. The **<eBike Lock>** is displayed as set up in the **eBike Flow** app.

More information about this can be found in the **eBike Flow** app or in the Bosch eBike Help Center on the website www.bosch-ebike.com/help-center.

Flow+ subscription functions

For the following functions, a **Flow+ subscription** is required. Fees may be payable for this.

Information about **Flow+ subscription** and details on individual services can be found in the **eBike Flow** app or in the Bosch eBike Help Center on the website www.bosch-ebike.com/help-center.

Battery Lock

The **<Battery Lock>** can be set up for any eBike via the **eBike Flow** app under **<Settings>** → **<Lock & Alarm>**.

In addition to the drive unit, the eBike battery can be locked when the eBike is switched off using **<Battery Lock>**. The eBike battery will only be unlocked again when the pre-set key (smartphone and/or **Kiox 300/ Kiox 500** display) is present when the eBike is switched on.

Share eBike

With the **eBike Flow** app, you can share your eBike and its digital functions with up to 5 other people. You remain in control of the settings, functions and updates. The people you choose to share with can only use the digital functions preselected by you. In order for you to be able to share the eBike, “share eBike” must be registered to you in the **eBike Flow** app and you must hold an active **Flow+ subscription**. The eBike software must be up to date. Under **<Settings>** in the **eBike Flow** app, you can create an invitation link and send this to the people you want to share with. Once they have accepted the invitation, they can connect the shared eBike with their own **eBike Flow** app user account.

Troubleshooting

The error messages are displayed in a pop-up on the **Kiox 400C** control unit.

The control unit shows whether critical errors or less critical errors occur on the eBike.

The error messages generated by the eBike can be read via the **eBike Flow** app or by your service center.

Via a link in the **eBike Flow** app, information about the error and support for rectifying the error can be displayed.

Less critical errors

Errors are acknowledged by pressing the select button **(7)** on the **Kiox 400C** or **Mini Remote/Mini Remote Dropbar** control unit.

You can use the following table to rectify the errors yourself if necessary. Otherwise, please contact your service center.

Number	Troubleshooting
503009	Check your display, the cabling and any power consumers connected to the display. If the problem persists, please get in touch with your service center.
523003	Check that the rim magnet is firmly attached to the valve. Then restart your eBike and check the display after a short ride. If the problem persists, please get in touch with your service center.
523006	Check the rim magnet and spoke magnet, if present. Then, restart your eBike.
853201	If the problem persists, please get in touch with your service center.
523005	The indicated error numbers show that the sensors are struggling to detect the magnetic field. See whether you have lost the magnet while riding.
514001	
514002	If you are using a magnet sensor, check that the sensor and magnet have been properly installed. Also make sure that the cable to the sensor is not damaged.
514003	
514006	If you are using a rim magnet, make sure that you do not have any magnetic field interference in the vicinity of the drive unit.
650001	Check that the eBike battery is sitting correctly. Check the electrical contacts on the eBike battery and the eBike battery holder for signs of corrosion. If necessary, clean the contacts using a soft, damp cloth and leave to dry. Run an eBike update, if available, via the **eBike Flow** app. Restart your eBike. If the problem persists, please get in touch with your service center.
660001	Restart your eBike. If the problem persists, do not charge your eBike battery and do not continue to use it. Please contact a service center.
660002	Do not remove the eBike battery from the eBike. Connect the eBike battery to a charger and wait at least 10 s. Re-insert the eBike battery into the eBike. Restart your eBike.
670001	Disconnect the charger from your eBike and from the mains power supply and wait at least 5 s. Then reconnect the charger to restart the charging process.

Number	Troubleshooting
	Notes: – Do not connect the charger's mains cable to the mains power supply while your eBike or the eBike battery are still starting up/shutting down. – Do not press the on/off button on the eBike battery while the mains cable of the charger is being connected or is already connected to the mains power supply. – Do not insert and remove the charger plug in quick succession. If the problem persists: – Use another charger in order to rule out charger errors. – Run an eBike update, if available, via the **eBike Flow** app. If the problem occurs while charging on the go: – Check whether the mains power supply meets the input parameters on the charger's type plate. – If the problem persists, please get in touch with your service center.
680007	The indicated error numbers show that the eBike battery is outside of the permissible operating temperature. The charging of the eBike battery is interrupted. As soon as the operating temperature returns to the permissible range, the charging process will start again.
680009	
680012	
680014	
680016	
680017	
903002	Try to ride your eBike to a different location for better signal.
903005	If the problem persists, please get in touch with your service center.
112000	Log back in to the **eBike Flow** app and connect your smartphone. If the problem persists: – Reinstall the app and then start your eBike. – Then connect your smartphone with your eBike. If the problem persists: – Please contact your service center.
1B7213	Run a software update in the **eBike Flow** app. Restart your eBike. If the problem persists, please get in touch with your service center.
1B7613	
1B7713	
1C7413	
1C7513	
1C7713	
5F0200	
F10005	To rectify the software incompatibility, all eBike components must have the latest software.

Number	Troubleshooting
	– Connect all components belonging to the eBike, including the removable and optional components. – Run a software update with the **eBike Flow** app or ask a service center to do so. – Restart your eBike.

Critical errors

If a critical error occurs, follow the instructions in the table below.

Number	Instructions
6A0000	Connect all components belonging to the eBike, including the removable and optional components. Run a software update. Restart your eBike. If the problem persists, please get in touch with your service center.
F10004	Connect all components belonging to the eBike, including the removable and optional components. Run a software update. All components require the latest software version. Restart your eBike. If the problem persists, please get in touch with your service center.
890000	– Acknowledge the error code. – Restart the eBike. If the problem persists: – Acknowledge the error code. – Run the software update. – Restart the eBike. If the problem persists: – Please contact a service center.

Maintenance and Service

Maintenance and Cleaning

Do not clean any of the components with pressurized water.

Keep the display of your control unit clean. Dirt can cause faulty brightness detection.

Clean your control unit using a soft cloth dampened only with water. Do not use cleaning products of any kind.

Note: The **Kiox 400C** control unit may fog up under certain temperature and humidity conditions. This is not an error. Put the eBike in a heated room.

Have your eBike checked by an expert at least once a year (including mechanical parts, up-to-dateness of system software).

In addition, the service date based on the distance traveled and/or on a period of time can be entered at a service center. In this case, the control unit displays a message telling you when the service date is due each time it is switched on.

Please have your eBike serviced and repaired by a service center.

- ▸ **Please make sure you have all repairs carried out by a service center.**

Note: If you are handing in your eBike to a service center for maintenance, it is recommended that you deactivate **<Lock & Alarm>**.

Note: If you do not use the **Kiox 400C** control unit for a long time, charge it in accordance with (see "Control Unit Power Supply (**Kiox 400C**)", page English – 13).

After-sales service and advice on using products

If you have any questions about the eBike and its components, contact a service center.

For contact details of service centers, please visit www.bosch-ebike.com.

More information

More information and videos about the eBike components and their functions can be found in the Bosch eBike Help Center.

Recycling Program

The individual eBike components as well as accessories and packaging should be recycled in an environmentally friendly manner.

Do not dispose of eBikes and their components with household waste.

You may recycle your Bosch battery pack by calling 1.800.822.8837.

Robert Bosch GmbH
72757 Reutlingen
Germany

www.bosch-ebike.com

kontakt@bosch.de

0 275 U07 3RK (2026.02) T / 89

System Controller | Mini Remote | Mini Remote Dropbar

BRC3100 | BRC3300 | BRC3310



en Original operating instructions

This manual contains important safety, performance and service information. Read and understand it along with the information provided to you by your bicycle manufacturer before using the product, and keep it for reference.

Table of Contents

Introduction 2
About Warnings 2
General Warnings 2
Using your Manual 3
Operating the Control Unit 4
Safety Instructions 4
Product description and specifications 8
Operation 11
Establishing a Smartphone Connection with the System Controller 15
Connecting the System Controller to the Mini Remote/Mini Remote Dropbar 17
Troubleshooting 19
Maintenance and Service 22
Maintenance/cleaning 22
After-sales service and advice on using products 22
More information 22
Recycling Program 22

Introduction

About Warnings

This manual contains many **DANGER**, **WARNING**, and **CAUTION** indicators concerning the consequences of failure to use, assemble, maintain, store, inspect and dispose of a Bosch-equipped eBike in a safe manner.

– The combination of the safety alert symbol and the word **DANGER** indicates a hazardous situation that, if not avoided, will result in death or serious injury.
– The combination of the safety alert symbol and the word **WARNING** indicates a hazardous situation that, if not avoided, could result in death or serious injury.
– The combination of the safety alert symbol and the word **CAUTION** indicates a hazardous situation that, if not avoided, could result in minor or moderate injury.

General Warnings



Read all safety warnings and all instructions. Failure to follow the warnings and instructions may result in death or serious injury.

Save all safety warnings and instructions for future reference.

The term **eBike battery** used in these operating instructions refers to all original Bosch eBike batteries from the system generation **the smart system**.

▶ **Read ALL accompanying manuals before riding the bike for the first time.** Your Bosch Drive System comes with additional manuals and documents provided by the manufacturer of the bicycle and other components. Failure to read and understand safety information can result in death or serious injury.

⚠ WARNING

▶ **This manual contains important safety, performance and service information.** Read it before you take the first ride on your new bicycle, and keep it for reference. The manual can also be found online at www.bosch-ebike.com.

▶ **This manual is intended to be read together with the separate user manual provided with your bicycle.** Be sure to read all provided documents including labels on the product before your first ride.

▶ **Take responsibility for your own SAFETY.** If you have any questions or do not understand something, consult with your dealer or the bicycle or component manufacturer.

▶ **Some eBike accessories may present a choking hazard to small children.** Keep these accessories away from children.

⚠ CAUTION

▶ **The Bosch Drive System adds weight to your bicycle which you may not be used to lift.** Avoid injury, use proper lifting techniques.

Using your Manual

In addition to the functions outlined here, changes to software relating to troubleshooting and functional modifications may be introduced at any time.

Graphics

The bicycle shown in this manual may differ slightly from your bicycle, but will be similar enough to help you understand our instructions.

RIGHT-HAND and LEFT-HAND sides are determined by facing in the direction the bicycle will travel when going forward. When you see a broken line (------), the item referred to is hidden from view.

Operating the Control Unit

Safety Instructions



Read all the safety and general instructions. Failure to follow the warnings and instructions may result in electric shock, fire and/or serious injury.

Save all safety warnings and instructions for future reference.

The term **eBike battery** used in these operating instructions refers to all original Bosch eBike batteries from the system generation **the smart system**.

The terms **drive** and **drive unit** used in these operating instructions refer to all original Bosch drive units from the system generation **the smart system**.

- ▸ **Read and observe the safety warnings and instructions in all operating instructions of the eBike components and your eBike.**
- ▸ **Do not allow yourself to be distracted by the control unit's display, particularly by text overlays shown according to the situation.** The display of riding information does not absolve the rider of the need to exercise due caution. If you do not focus exclusively on the traffic, you risk being involved in an accident. If you want to change settings on your control unit, beyond just changing the riding mode, stop cycling to do so.
- ▸ **Do not attempt to secure the display or control unit while riding.**
- ▸ **Do not enter information or make selections while riding.** Interacting with the display or control unit while riding can lead to accidents causing serious injury or death. You must observe road and traffic conditions, and comply with traffic laws at all times.
- ▸ **Be aware that by selecting the drive mode you will also influence the amount of motor support from your bike.** Choose a drive mode that fits your cycling skills, test and familiarize yourself with drive modes and features in each mode before use.
- ▸ **The walk assistance function must only be used when pushing the eBike.** There is a risk of injury if the wheels of the eBike are not in contact with the ground while using the walk assistance.
- ▸ **When the walk assistance is activated, the pedals may turn at the same time.** When the walk assistance function is activated, make sure that there is enough space between your legs and the turning pedals to avoid the risk of injury.
- ▸ **When using the walk assistance, make sure that you can control the eBike and that you can hold it securely at all times.** Under certain circumstances, the walk assistance may stop (e.g. if the pedals hit an obstacle or if you accidentally let go of the button on the control unit). The eBike may suddenly move backwards onto you or tip up. This poses a particular risk for you if there is an additional load. When using the walk assistance, do not bring the eBike into situations in which you cannot hold the eBike using your own strength.
- ▸ **Do not stand your eBike upside down on its handlebars and saddle if the control unit or its holder protrude from the handlebars.** This may irreparably damage the control unit or the holder.
- ▸ **Do not connect a charger to the eBike battery if the control unit or the display reports a critical error.** This may result in damage to your eBike battery. The eBike battery may catch fire, thereby resulting in serious burns and other injuries.
- ▸ **Caution lithium battery!** Do not store batteries in an environment with extremely high temperatures or extremely low air pressure, this can lead to an explosion or leakage of flammable liquids or gases. Do not dispose the battery in your regular household trash or a public trash receptacle. Batteries that enter the regular waste stream can be damaged, leading to a fire resulting in serious injury, death, property damage and environmental con-

tamination. Recycle the battery at an authorized recycling center or take them to a local household hazardous waste disposal facility.

- ▶ **The control unit features a wireless interface. Local operating restrictions, e.g. in airplanes or hospitals, must be adhered to.**
- ▶ **Caution!** When using the control unit with *Bluetooth*®, this may cause interference that affects other devices and systems, airplanes and medical devices (e.g. pacemakers, hearing aids). Similarly, the possibility that this may cause damage to humans and animals in the immediate vicinity cannot be completely excluded. Do not use the control unit with *Bluetooth*® in the vicinity of medical devices, gas stations, chemical plants, areas with a potentially explosive atmosphere or on blast sites. Do not use the control unit with *Bluetooth*® in airplanes. Avoid using the device in close proximity to your body over an extended period of time.
- ▶ The *Bluetooth*® wordmark and its logos are the registered trademarks and property of Bluetooth SIG, Inc. Any use of this wordmark/these logos by Robert Bosch GmbH, Bosch eBike Systems is under license.
- ▶ Before using the System Controller while riding, make sure to familiarize yourself with System Controller controls and functions by reviewing the operating instructions in this user manual. Practice riding under traffic-free conditions and make sure that you are comfortable using the System Controller before using it in traffic.
- ▶ Do not use the System Controller while riding if you are not comfortable doing so. Do not allow yourself to be distracted by the System Controller. Please note that distracted riding can lead to serious injury, up to and including death. Riders must observe road and traffic conditions and comply with all applicable traffic laws at all times.
- ▶ Please note that certain State or local laws may require that class III eBikes must be equipped with a functioning speedometer that displays speed in miles per hour. Riders must be aware of any and all applicable rules and regulations related to the operation or use of class III eBikes in any applicable jurisdictions before operating or otherwise using this product.

Safety Warnings for the Battery inside the System Controller

- ▶ **Charge the System Controller in temperatures above +32 degrees F (0 degrees C) and below +104 degrees F (40 degrees C). Store System Controller in locations where temperatures will not exceed 104 degrees F (40 degrees C).** This is important to prevent serious damage to the battery in the System Controller.
- ▶ **Do not expose System Controller to fire or excessive temperature.** Exposure to fire or temperature above 212 °F (100 °C) may cause explosion.
- ▶ **Never submerge System Controller in fluid of any kind or allow fluid to enter them.** Corrosive or conductive fluid (such as seawater or industrial chemical or bleach containing products, etc.) can cause short circuit which may result in fire, personal injury and property damage.
- ▶ **Battery leakage may occur under extreme usage or temperature conditions. Avoid contact with skin and eyes.** The battery liquid is caustic and could cause chemical burns to tissues. If liquid comes in contact with skin, wash quickly with soap and water. If the liquid contacts your eyes, immediately flush eyes with water for a minimum of 15 minutes and seek medical attention.
- ▶ **Do not disassemble System Controller.** No user serviceable part inside. Incorrect reassembly or damage may result in fire or explosion.

Safety instructions for button/coin cells



⚠ WARNING

INGESTION HAZARD:
This product contains a button cell or coin battery.
DEATH or serious injury can occur if ingested.
A swallowed button cell or coin battery can cause **Internal Chemical Burns** in as little as **2 hours**.
KEEP new and used batteries **OUT OF REACH of CHILDREN**.
Seek immediate medical attention if a battery is suspected to be swallowed or inserted inside any part of the body.
Remove and immediately recycle or dispose of used batteries according to local regulations and keep away from children. Do NOT dispose of batteries in household trash or incinerate.
Even used batteries may cause severe injury or death. Call a local poison control center for treatment information.
Non-rechargeable batteries are not to be recharged. Do not force discharge, recharge, disassemble, heat above 104 °F (40 °C) or incinerate. Doing so may result in injury due to venting, leakage or explosion resulting in chemical burns.
Ensure the batteries are installed correctly according to polarity (+ and −).
Do not mix old and new batteries, different brands or types of batteries, such as alkaline, carbon-zinc, or rechargeable batteries.
Remove and immediately recycle or dispose of batteries from equipment not used for an extended period of time according to local regulations.
Always completely secure the battery compartment. If the battery compartment does not close securely, stop using the product, remove the batteries, and keep them away from children.

- ▸ **Only use the button/coin cells listed in this operating manual.** Do not use any other button/coin cells or other forms of electrical power supply.
- ▸ **Do not damage the button/coin cell and or take the button/coin cell apart.** The button/coin cell may leak, explode, catch fire and cause personal injury.
- ▸ **Do not allow damaged button/coin cells to come into contact with water.** Leaking lithium may mix with water to create hydrogen, which could cause a fire, an explosion, or personal injury.

NOTICE: This device complies with part 15 of the FCC Rules. Operation is subject to the following two conditions:

1. This device must not cause harmful interference, and
2. this device must accept any interference received, including interference that may cause undesired operation.

NOTICE: Changes or modifications made to this equipment not expressly approved by the Robert Bosch GmbH may void the FCC authorization to operate this equipment.

NOTE: This equipment has been tested and found to comply with the limits for a Class B digital device, pursuant to Part 15 of the FCC Rules. These limits are designed to provide reasonable protection against harmful interference in a residential installation. This equipment generates, uses and can radiate radio frequency energy and, if not installed and used in accordance with the instructions, may cause harmful interference to radio communications. However, there is no guarantee that interference will not occur in a particular installation. If this equipment does cause harmful interference to radio or television reception, which can be determined by turning the equipment off and on, the user is encouraged to try to correct the interference by one or more of the following measures:

- – Reorient or relocate the receiving antenna.
- – Increase the separation between the equipment and receiver.

– Connect the equipment into an outlet on a circuit different from that to which the receiver is connected.
– Consult the dealer or an experienced radio/TV technician for help.

Radiofrequency radiation exposure Information:
The radiated output power of the device is far below the FCC radio frequency exposure limits. Nevertheless, the device shall be used in such a manner that the potential for human contact during normal operation is minimized.

This equipment complies with FCC radiation exposure limits set forth for an uncontrolled environment into portable exposure conditions without distance restrictions. This transmitter must not be co-located or operating in conjunction with any other antenna or transmitter.

ISED Notice (Canada)

This device contains licence-exempt transmitter(s)/ receiver(s) that comply with Innovation, Science and Economic Development Canada's licence-exempt RSS(s). Operation is subject to the following two conditions:

1. this device may not cause interference, and
2. this device must accept any interference, including interference that may cause undesired operation of the device.

This equipment complies with Canada radiation exposure limits set forth for an uncontrolled environment into portable exposure conditions without distance restrictions. This transmitter must not be co-located or operating in conjunction with any other antenna or transmitter.

Privacy notice

When connecting the eBike to the **Bosch DiagnosticTool 3** or when exchanging eBike components, technical information about your eBike (e.g. bicycle manufacturer, model, bike ID, configuration data) as well as regarding the use of the eBike (e.g. total travel time, energy consumption, temperature) is transmitted to Bosch eBike Systems (Robert Bosch GmbH) for processing your request, in service cases and for the purposes of product improvement. You can find further information about data processing at www.bosch-ebike.com/privacy-full.

Product description and specifications

Product Features

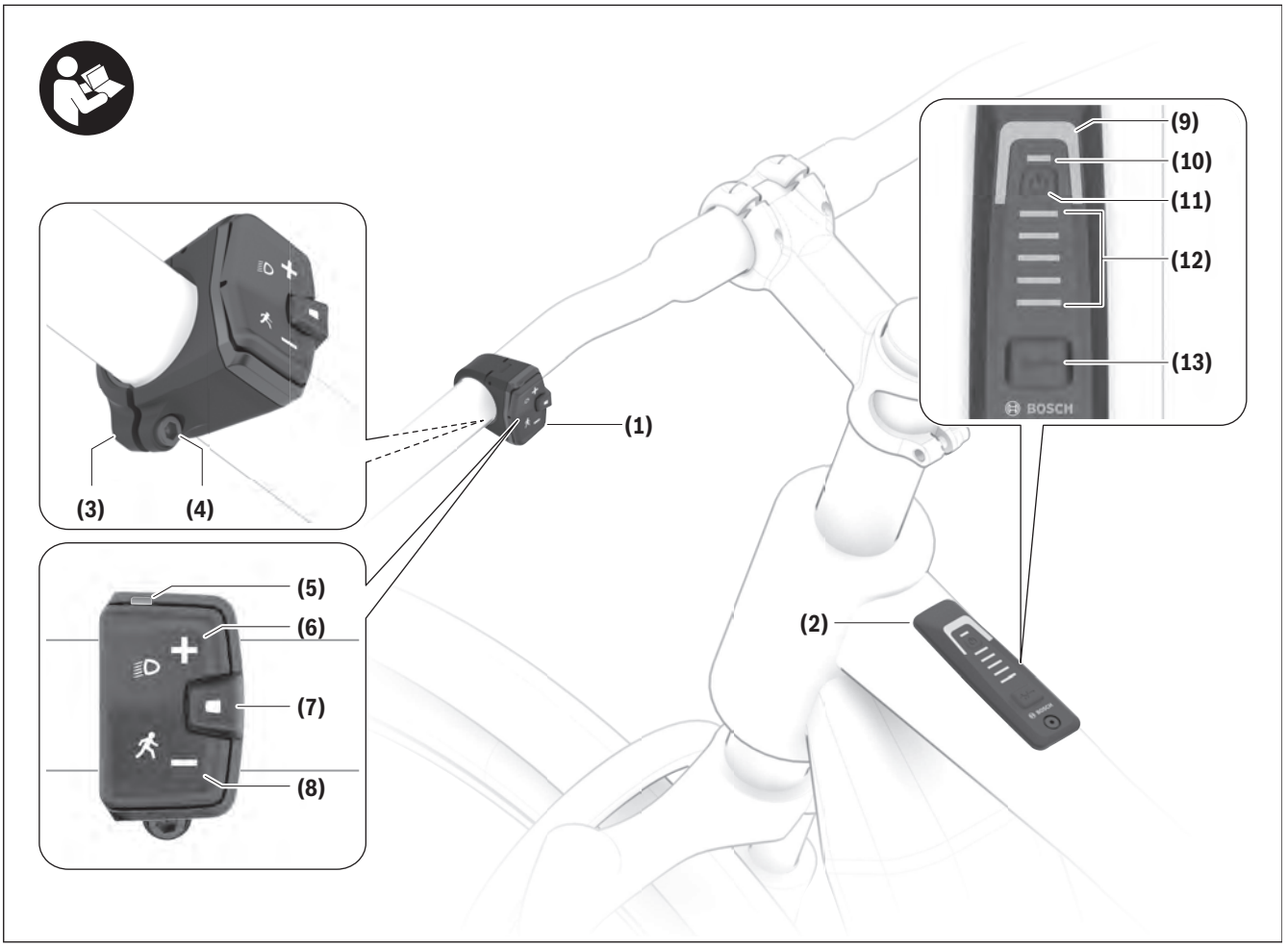

All illustrations of bike parts except for the drive unit, display (including control unit), speed sensor, and the corresponding holders are a schematic representation and may differ on your eBike.

(1) **Mini Remote/Mini Remote Dropbar** control unit
(2) **System Controller** control unit
(3) Holder
(4) Fastening screw for holder
(5) LED indicator light
(6) Button for increasing the assistance level **+**/ bicycle lights
(7) Select button
(8) Button for reducing the assistance level **–**/ walk assistance/hill-start assist
(9) Riding mode LED
(10) ABS LED (optional)/ambient light sensor
(11) ON/OFF button
(12) Battery charge indicator of the eBike battery
(13) Mode button
(14) Metal tab
(15) Battery cover
(16) Fastening screw for the metal tab

Intended Use

The **System Controller** and **Mini Remote/Mini Remote Dropbar** control units are designed for controlling an eBike/display from **the smart system** generation of systems. You can also use them to control the **eBike Flow** app.

In order to be able to use the control unit to its fullest extent, a compatible smartphone with the **eBike Flow** app is required.

Using the **eBike Flow** app, a *Bluetooth*® connection can be established between the smartphone and the eBike, between the smartphone and **System Controller**, and between **System Controller** and **Mini Remote/Mini Remote Dropbar**.



Depending on the operating system of the smartphone, the **eBike Flow** app can be downloaded free of charge from the Apple App Store or Google Play Store.

Scan the code with your smartphone to download the **eBike Flow** app.

Technical Data

Control unit		System Controller
Product code		BRC3100
Operating temperature	°F °C	+23 to +104 −5 to +40
Storage temperature	°F °C	+50 to +104 +10 to +40
Internal lithium-ion battery	V mAh	3.7 75
Protection rating		IP55
Dimensions	in mm	3.5 × 1.1 × 1.1 88 × 28 × 27
Weight	lbs g	0.08 35
Bluetooth® Low Energy 5.0		
– Frequency	MHz	2400–2480
– Transmission power	mW	≤ 1

Control unit		Mini Remote	Mini Remote Dropbar
Product code		BRC3300	BRC3310
Operating temperature	°F °C	+23 to +104 −5 to +40	+23 to +104 −5 to +40
Storage temperature	°F °C	+50 to +104 +10 to +40	+50 to +104 +10 to +40
Battery		3 V, 1 × CR1620	3 V, 1 × CR1620
Protection rating		IP55	IP55
Dimensions	in mm	1.6 × 1.5 × 0.9 40 × 39 × 22	2.0 × 1.8 × 0.9 50 × 46 × 22
Weight	lbs g	0.04 16	0.04 20
Bluetooth® Low Energy 5.0			
– Frequency	MHz	2400–2480	2400–2480
– Transmission power	mW	≤ 1.9	≤ 1.9

The license information for the product is available at the following Internet address: www.bosch-ebike.com/licences

FCC ID: 2AWRC-BRC3300
IC: 26294-BRC3300
HVIN: BRC3300/BRC3310

Operation

Requirements

The eBike can then only be switched on when the following requirements are met:

– A sufficiently charged eBike battery is inserted (see operating instructions for the eBike battery from the system generation **the smart system**).
– The speed sensor, if provided, is connected properly (see operating instructions for the drive unit from the system generation **the smart system**).

Note: Improvements and added functionality are regularly introduced through software updates. Therefore, the displays and functions shown here may differ from what is actually displayed.

Control unit power supply (System Controller)

If a sufficiently charged eBike battery is inserted into the eBike and the eBike is switched on, then the internal control unit battery is powered and charged.

Please contact your service center if the internal battery of the control unit is defective.

Control Unit (Mini Remote/Mini Remote Dropbar) Power Supply

The **Mini Remote/Mini Remote Dropbar** control unit is supplied with energy by a CR1620 coin cell.

Replacing the Coin Cell (Mini Remote/Mini Remote Dropbar)

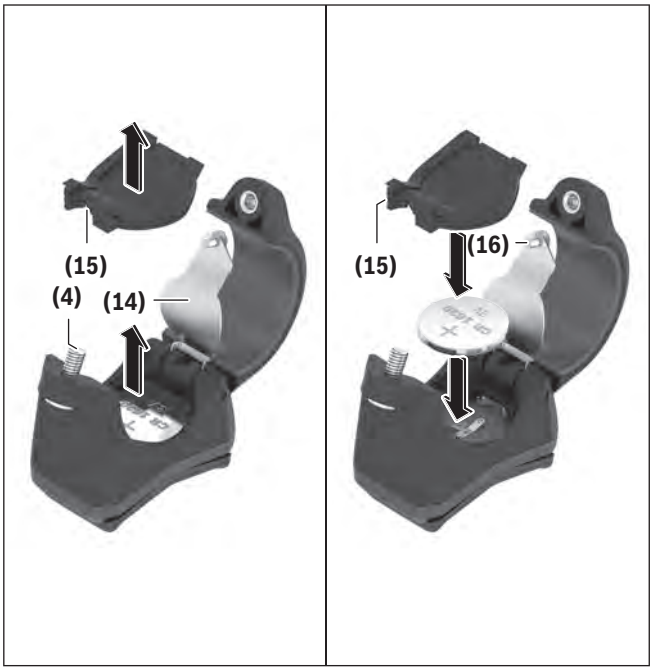

If the coin cell of the **Mini Remote/Mini Remote Dropbar** control unit **(1)** is running low, the LED indicator light **(5)** will flash orange.

To replace the coin cell, open the fastening screw for the holder **(4)** with a hex key (3 mm) and remove the **Mini Remote/Mini Remote Dropbar** control unit from the handlebars.

Open the metal tab **(14)** with a cross-headed screwdriver and remove the battery cover **(15)**.

Remove the used coin cell and insert a new type CR1620 coin cell into the battery compartment with the label facing upwards. The LED indicator light **(5)** will flash green to indicate that the coin cell has been inserted correctly.

Close the battery compartment with the battery cover **(15)**. Check that the battery cover **(15)** is correctly inserted to ensure that the battery compartment is closed securely.

Close the metal tab **(14)** again by carefully tightening the fastening screw for the metal tab **(16)** (approx.

0.11 lb ft [0.15 Nm]). Then secure the **Mini Remote/Mini Remote Dropbar** control unit back onto the handlebars.

Note: Carefully tighten the fastening screw for the holder **(4)** (approx. 0.4 lb ft [0.6 Nm]).

Note: The connection to the **System Controller** is not interrupted when the coin cell is changed.

Switching the eBike on/off

To **switch on** the eBike, briefly press the ON/OFF button **(11)** on the **System Controller** control unit. After the starting animation, the state of charge of the eBike battery is displayed in color with the battery charge indicator **(12)** and the set riding mode with the **(9)** display. The eBike is ready to ride.

The display brightness is controlled by the ambient light sensor **(10)**. Therefore, do not cover the ambient light sensor **(10)**.

The drive is activated as soon as you start pedaling (except in the **OFF** riding mode). The drive power varies depending on the riding mode set.

As soon as you stop in normal operation, press the pedals, or as soon as you have reached a speed of **20/28 mph (32/45 km/h)**, the assistance will be switched off by the drive. The drive is automatically reactivated as soon as you press the pedals and the speed is below **20/28 mph (32/45 km/h)**.

To **switch off** the eBike, briefly press the on/off button **(11)** (< 3 s). The battery charge indicator of the eBike battery **(12)** and the riding mode LED **(9)** go out.

If no power is requested from the drive for approx. **10** minutes (e.g. due to the eBike being stationary) and no button is pressed, the eBike switches off automatically.

Battery charge indicator of the eBike battery

In the battery charge indicator of the eBike battery **(12)**, each ice-blue bar represents 20 % capacity and each white bar represents 10 % capacity. The topmost bar shows the maximum capacity.

Example: Four ice-blue bars and one white bar are displayed. The state of charge is between 81 % and 90 %.

If capacity is low, both of the lower displays change color:

Bar	Capacity
2 × orange	30 % to 21 %
1 × orange	20 % to 11 %
1 × red	10 % to reserve
1 × red flashing	Reserve to empty

If the eBike battery is being charged, the topmost bar on the battery charge indicator of the eBike battery **(12)** flashes.

Outside of the eBike, the eBike battery's state of charge is indicated by the LEDs on the eBike battery.

Selecting the Riding Mode

On the control unit, you can set the level of assistance you want the drive to provide you with while pedaling.

Mini Remote/Mini Remote Dropbar: Briefly press (< 1 s) the buttons to increase the assistance level **+ (6)** or to decrease the assistance level **– (8)** in order to increase or decrease the assistance accordingly.

System Controller: Briefly press (< 1 s) the mode button **(13)** to increase the assistance.

Press the mode button **(13)** for longer than 1 s to decrease the assistance.

The riding mode can be changed even while cycling, and is displayed in color.

Additional riding modes can be activated via the **eBike Flow** app or at your service center if this is provided by the bicycle manufacturer.

Note: The riding modes available depend on the respective drive unit. The intensity and duration of the assistance vary depending on the riding mode.

Riding mode	Notes
OFF	Drive assistance is switched off. The eBike can just be moved by pedaling, as with a normal bicycle.

Riding mode	Notes
ECO	Effective assistance with maximum efficiency, for maximum range
ECO+	Range-optimized riding mode that only switches on the drive assistance above a certain rider performance; for natural cycling and for a maximum range
TOUR	Steady assistance, long range for touring
TOUR+	Dynamic assistance for natural, sporty cycling
eMTB[A)]	Optimal assistance whatever the terrain, rapid acceleration when starting from a standstill, improved dynamics and top performance including “Extended Boost”
eMTB+[A)]	Dynamic support to the maximum – at the perfect level and with up to 100 % more “Extended Boost” – for even more fun on trails
SPORT	Powerful assistance, for mountain biking and for cycling in urban traffic
TURBO	Maximum assistance even at a high cadence, for biking sports
AUTO	The assistance adapts dynamically to the riding situation.
RACE[A)]	Maximum assistance on the eMTB racetrack; very quick response and maximum "Extended Boost" for the best possible performance in competitive situations
CARGO	Steady, powerful assistance for safely transporting heavy weights
SPRINT	Dynamic assistance according to cadence – for athletic eGravel and eRoad cycling with rapid sprints and frequent ascents

A) The "Extended Boost" provides a controlled pushing force over a short distance once pedaling is stopped.

Adjusting the Riding Mode

The riding modes can be adapted within certain limits using the **eBike Flow** app. This gives you the option of adjusting your eBike to your personal requirements.

It is not possible to create a completely new riding mode. You can only adjust the riding modes that have been enabled by the bicycle manufacturer on your system.

In addition, restrictions in your country may mean that it is not possible to adjust a particular riding mode.

The following parameters are available for making adjustments:

- Assistance in relation to the base value of the riding mode (within the legal requirements)
- Drive response
- Top limit speed (within the legal requirements)
- Maximum torque (within the limits of the drive)

Note: Please ensure that your modified riding mode retains the position, name and color on all displays and controls.

Interaction of the drive unit with the gear-shifting

You should shift through gears on an eBike in the same manner as when using a normal bicycle (observe the operating instructions of your eBike with regard to this point).

Irrespective of the type of gear shifting, it is advisable that you briefly reduce the pressure on the pedals when changing gear. This will aid gear shifting and reduce wear on the powertrain.

By selecting the correct gear, you can increase your speed and range while applying the same amount of force.

For this reason, follow the gear change recommendations shown on your display.

Switching Bicycle Lights On and Off (Mini Remote/Mini Remote Dropbar only)

Before starting each journey, check that your bike lights are working correctly.

To **switch on/off** the bike lights, press and hold the bicycle lights **(6)** button for more than 1 s.

Switching the walk assistance on/off

The walk assistance can make it easier for you to push the eBike. The maximum speed of the walk assistance is **2.5 mph (4 km/h)**. The bicycle manufacturer can adjust the default so that it is lower and, if necessary, it can also be adjusted by a service center.

- ▶ **The walk assistance function must only be used when pushing the eBike.** There is a risk of injury if the wheels of the eBike are not in contact with the ground while using the walk assistance.
- ▶ **If the selected gear is too high, the drive unit may not be able to move the eBike or activate the roll-away lock.**

Note: The walk assistance function is deactivated in the **OFF** riding mode.

To **activate** walk assistance, press and hold the walk assistance button **(8)** for more than 1 s.

After activation, the continuous ice-blue bars of the battery charge indicator **(12)** show that the drive is beginning to push.

If you release the walk assistance button **(8)**, walk assistance stops. During this, the battery charge indicator **(12)** changes to continuous white bars. You can reactivate walk assistance straight away by pressing the walk assistance **(8)** button within 10 s.

If you do not reactivate walk assistance within 10 s, walk assistance automatically switches off.

Walk assistance is always ended if

- The rear wheel jams,
- The bicycle cannot move over ridges,
- A body part is blocking the bike crank,
- An obstacle continues to turn the crank,
- You start pedaling,
- The increase assistance level **+**/bicycle lights **(6)** button or ON/OFF button **(11)** is pressed.

Walk assistance has a roll-away lock, i.e. even after walk assistance has been used, rolling backwards is actively curbed by the drive for a few seconds, and you cannot push the eBike backwards or can only do so with difficulty.

The roll-away lock is immediately deactivated by pressing the increase assistance level **+**/bicycle lights **(6)** button.

The walk assistance function is subject to local regulations; the way it works may therefore differ from the description above. It can also be deactivated.

Switching Hill-Start Assist On and Off

Hill-start assist makes it easier to start riding on hills.

To **activate** hill-start assist, place your foot on the pedal so that your eBike detects that you would like to start riding. Then press the hill-start assist button **(8)** for more than 1 s.

Note: Follow the order for actions when activating the hill-start assist button. The walk assistance will activate if you first press the hill-start assist button **(8)** and then place your foot on the pedal.

Once you have successfully activated hill-start assist, let go of the hill-start assist button **(8)** again. Once you have safely started riding, the hill-start assist will deactivate automatically and you will continue riding in the set riding mode. You can end hill-start assist at any time by taking your foot off the pedal.

You can then reactivate hill-start assist within 10 s by placing your foot back on the pedal. This will be shown on your display. It is not necessary to press the hill-start assist button **(8)** again. If you press the hill-start assist button **(8)** within 10 s, the countdown will be reset once and you will again have 10 s to activate hill-start assist.

Hill-start assist has a roll-away lock, i.e. even after hill-start assist has been used, rolling backwards is actively curbed by the drive for a few seconds, and this prevents the eBike from rolling backwards unintentionally.

The hill-start assist function is subject to local regulations; the way it works may therefore differ from the description above, or the function may even be deactivated completely.

ABS – Anti-lock braking system (optional)

If the eBike is equipped with a Bosch eBike ABS from **the smart system** generation of systems, the ABS LED **(10)** lights up when the eBike is started.

After moving off, the ABS internally checks its functionality and the ABS LED **(10)** goes off.

In the event of a fault, the ABS LED **(10)** lights up, together with the orange flashing riding mode LED **(9)**. You can acknowledge the fault using the select button **(7)** on the **Mini Remote/Mini Remote Dropbar** control unit **(1)** or with the mode button **(13)** on the **System Controller (2)** control unit. The flashing riding mode LED **(9)** will go out. While the ABS LED **(10)** is lit up, the ABS is not in operation.

For details on the ABS and how it works, including how it acts during a trick, please refer to the ABS operating instructions.

Establishing a Smartphone Connection with the System Controller

In order to be able to use the following eBike functions, a smartphone with the **eBike Flow** app is required.

Connection to the app occurs via a *Bluetooth*® connection.

Switch on the eBike and wait for the starting animation. Do not ride the eBike.

Begin *Bluetooth*® pairing by pressing and holding (> 3 s) the on/off button **(11)**. Release the on/off button **(11)** as soon as the topmost bar on the battery charge indicator of the eBike battery **(12)** indicates the pairing process by flashing blue.

Confirm the connection request in the app.

Software updates

Software updates must be started manually in the **eBike Flow** app.

Software updates are transferred from the app to the control unit in the background as soon as it is connected to the app. During the update process, the green flashing of the battery charge indicator of the eBike battery **(12)** indicates the progress. The eBike is then restarted.

You can control the software updates via the **eBike Flow** app.

Activity tracking and digital eBike garage

In order to record activities, it is necessary to register and log into the **eBike Flow** app.

To record activities, you must consent to the storage of your location data in the app. Without this, your activities cannot be recorded in the app. For location data to be recorded, you must be logged in to a user account.

You can add a total of six eBikes to one user account in the **eBike Flow** app.

eBike Lock

The **<eBike Lock>** can be set up for any eBike via the **eBike Flow** app under **<Settings>** → **<Lock & Alarm>**. In the process, a key for unlocking the eBike is saved on the smartphone and/or the **Kiox 300/ Kiox 500** display.

The **<eBike Lock>** is automatically enabled in the following cases:

– The eBike is switched off via the control unit
– The eBike is switched off automatically

If the eBike is switched on and the smartphone is connected to the eBike via *Bluetooth*®, or the pre-set display is fitted in the holder, the eBike will be unlocked.

<eBike Lock> is linked to your **user account**.

If you lose your smartphone, you can log in to your user account on the **eBike Flow** app using another smartphone and then unlock the eBike.

If the display is lost, you can reset all the digital keys in the **<Lock & Alarm>** menu item in the **eBike Flow** app.

Caution! If you select a setting in the app that could have negative consequences in combination with the **<eBike Lock>** (e.g. deleting your eBike or user account), you will be shown warning messages beforehand. **Please read through these thoroughly and adhere to the warnings that are issued (e.g. before deleting your eBike or user account).**

Setting up <eBike Lock>

In order to be able to set up the **<eBike Lock>**, the following conditions must be fulfilled:

- The **eBike Flow** app has been installed.
- A user account has been created.
- The eBike is not currently updating.
- The eBike is connected to the smartphone via *Bluetooth*®.
- The eBike is stationary.
- The smartphone is connected to the Internet.
- The eBike battery is sufficiently charged and the charging cable is not connected.

You can set up **<eBike Lock>** in the **eBike Flow** app under the **<Lock & Alarm>** menu item.

The drive unit of your eBike only provides support if the smartphone is connected to the eBike via *Bluetooth*® or the display is placed in the holder when the eBike is switched on. If the smartphone is used as a key, your smartphone must have *Bluetooth*® switched on, and the **eBike Flow** app must be active in the background. When the **<eBike Lock>** is activated, you can continue to use your eBike without assistance from the drive unit.

Compatibility

The **<eBike Lock>** is compatible with all Bosch drive units from the system generation **the smart system**.

How it works

In combination with the **<eBike Lock>**, the smartphone and the display work like a key for the drive unit. The **<eBike Lock>** is activated by switching off the eBike. When switching on, the eBike checks if any pre-set key is available. A white LED flashes on the **System Controller** control unit, and a lock symbol is shown on the display.

Note: The **<eBike Lock>** alone does not provide adequate theft protection; it is simply a supplement to a mechanical lock. The **<eBike Lock>** does not provide any form of mechanical lock for the eBike. Only the assistance from the drive unit is deactivated. The drive unit will be unlocked for as long as the smartphone is connected to the eBike via *Bluetooth*® or the display is placed in the holder.

If you want to give third parties temporary or permanent access to your eBike, share one of the pre-set digital keys (display/smartphone). As a result, the <eBike Lock> is still active. If you want to take your eBike to a service, the <eBike Lock> can be deactivated in the eBike Flow app in the <Settings> menu item. If you wish to sell your eBike, you will also need to delete the eBike from your user account in the **eBike Flow** app in the **<Settings>** menu item.

When the eBike is switched off, the drive unit will emit a "Lock" sound (i.e. an audio signal that is played **once**) to indicate that the assistance from the drive unit is switched off.

When the eBike is switched on, the drive unit will emit two "Unlock" sounds (i.e. an audio signal that is played **twice**) to indicate that the assistance from the drive unit is enabled again.

The "Lock" sound will help you determine whether or not the **<eBike Lock>** on your eBike is active. The audio signal is activated by default, but it can be deactivated in the **eBike Flow** app in the **<Locking sound>** menu item by selecting the lock symbol under your eBike.

Note: If you can no longer set up or switch off the **<eBike Lock>**, please contact your service center.

Replacing the Smartphone

1. Install the **eBike Flow** app on the new smartphone.

2. Log in with **the same** user account that was used to activate the **<eBike Lock>**.
3. The **<eBike Lock>** is displayed as set up in the **eBike Flow** app.

More information about this can be found in the **eBike Flow** app or in the Bosch eBike Help Center on the website www.bosch-ebike.com/help-center.

Flow+ subscription functions

For the following functions, a **Flow+ subscription** is required. Fees may be payable for this.

Information about **Flow+ subscription** and details on individual services can be found in the **eBike Flow** app or in the Bosch eBike Help Center on the website www.bosch-ebike.com/help-center.

Battery Lock

The **<Battery Lock>** can be set up for any eBike via the **eBike Flow** app under **<Settings>** → **<Lock & Alarm>**.

In addition to the drive unit, the eBike battery can be locked when the eBike is switched off using **<Battery Lock>**. The eBike battery will only be unlocked again when the pre-set key (smartphone and/or **Kiox 300/ Kiox 500** display) is present when the eBike is switched on.

Share eBike

With the **eBike Flow** app, you can share your eBike and its digital functions with up to 5 other people. You remain in control of the settings, functions and updates. The people you choose to share with can only use the digital functions preselected by you. In order for you to be able to share the eBike, “share eBike” must be registered to you in the **eBike Flow** app and you must hold an active **Flow+ subscription**. The eBike software must be up to date. Under **<Settings>** in the **eBike Flow** app, you can create an invitation link and send this to the people you want to share with. Once they have accepted the invitation, they can connect the shared eBike with their own **eBike Flow** app user account.

Connecting the System Controller to the Mini Remote/ Mini Remote Dropbar

The **System Controller** and **Mini Remote/Mini Remote Dropbar** control units are connected via *Bluetooth*®.

Switch the eBike on and do not ride.

If the **Mini Remote/Mini Remote Dropbar** control unit has not already been connected to the **System Controller** by the specialist retailer, proceed as follows:

1. First, connect your smartphone to the **System Controller** via the **eBike Flow** app (see "Establishing a Smartphone Connection with the System Controller", page English – 15).
2. In the **eBike Flow** app, select **<Settings>** → **<eBike pass>** → **<Components>** → **<Add new device>**. Then select **<Mini Remote/Mini Remote Dropbar>**.
3. **Mini Remote/Mini Remote Dropbar:** Start the pairing process by pressing any button until the pairing process is shown by the LED indicator light **(5)** flashing blue.
4. Follow the instructions in the **eBike Flow** app.

If pairing is successful, this is shown within 30 s on the **Mini Remote/Mini Remote Dropbar** control unit by the LED indicator light **(5)** flashing green three times.

If the connection cannot be established, this is shown by the LED indicator light **(5)** flashing red three times. Repeat the connection process.

If you want to connect the **Mini Remote/Mini Remote Dropbar** control unit to a **System Controller** on another eBike, the following steps must be carried out:

1. First, connect your smartphone to the **System Controller** via the **eBike Flow** app (see "Establishing a Smartphone Connection with the System Controller", page English – 15).
2. In the **eBike Flow** app, select **<Settings>** → **<eBike pass>** → **<Components>** → **<Add new device>**. Then select **<Mini Remote/Mini Remote Dropbar>**.
3. **Mini Remote/Mini Remote Dropbar:** Remove the coin cell from the **Mini Remote/Mini Remote Dropbar** control unit and wait at least 30 s. Reinsert the coin cell and wait until the LED indicator light **(5)** flashes green.
4. Within the next 10 s, press and hold the decrease assistance level **–**/walk assistance button **(8)** for 5 s.
   The pairing process is shown by the LED indicator light **(5)** flashing blue for 30 s.
5. Follow the instructions in the **eBike Flow** app.
   If pairing is successful, this is shown within 30 s on the **Mini Remote/Mini Remote Dropbar** control unit by the LED indicator light **(5)** flashing green three times. If the connection cannot be established, this is shown by the LED indicator light **(5)** flashing red three times. Repeat the connection process.

Troubleshooting

The control unit shows whether critical errors or less critical errors occur on the eBike.

The error messages generated by the eBike can be read via the **eBike Flow** app or by your service center.

Via a link in the **eBike Flow** app, information about the error and support for rectifying the error can be displayed.

Less critical errors

Less critical errors are shown by orange flashing, followed by the riding mode LED **(9)** lighting up orange continuously. To acknowledge the fault, press the select button **(7)** on the **Mini Remote/Mini Remote Dropbar (1)** control unit or the mode button **(13)** on the **System Controller (2)** control unit. The riding mode LED **(9)** once again continuously shows the color of the set riding mode.

You can use the following table to rectify the errors yourself if necessary. Otherwise, please contact your service center.

Number	Troubleshooting
503009	Check your display, the cabling and any power consumers connected to the display. If the problem persists, please get in touch with your service center.
523003	Check that the rim magnet is firmly attached to the valve. Then restart your eBike and check the display after a short ride. If the problem persists, please get in touch with your service center.
523006	Check the rim magnet and spoke magnet, if present. Then, restart your eBike.
853201	If the problem persists, please get in touch with your service center.
523005	The indicated error numbers show that the sensors are struggling to detect the magnetic field. See whether you have lost the magnet while riding. If you are using a magnet sensor, check that the sensor and magnet have been properly installed. Also make sure that the cable to the sensor is not damaged. If you are using a rim magnet, make sure that you do not have any magnetic field interference in the vicinity of the drive unit.
514001	
514002	
514003	
514006	
650001	Check that the eBike battery is sitting correctly. Check the electrical contacts on the eBike battery and the eBike battery holder for signs of corrosion. If necessary, clean the contacts using a soft, damp cloth and leave to dry. Run an eBike update, if available, via the **eBike Flow** app. Restart your eBike. If the problem persists, please get in touch with your service center.
660001	Restart your eBike. If the problem persists, do not charge your eBike battery and do not continue to use it. Please contact a service center.
660002	Do not remove the eBike battery from the eBike. Connect the eBike battery to a charger and wait at least 10 s. Re-insert the eBike battery into the eBike. Restart your eBike.

Number	Troubleshooting
670001	Disconnect the charger from your eBike and from the mains power supply and wait at least 5 s. Then reconnect the charger to restart the charging process. **Notes:** – Do not connect the charger's mains cable to the mains power supply while your eBike or the eBike battery are still starting up/shutting down. – Do not press the on/off button on the eBike battery while the mains cable of the charger is being connected or is already connected to the mains power supply. – Do not insert and remove the charger plug in quick succession. If the problem persists: – Use another charger in order to rule out charger errors. – Run an eBike update, if available, via the **eBike Flow** app. If the problem occurs while charging on the go: – Check whether the mains power supply meets the input parameters on the charger's type plate. – If the problem persists, please get in touch with your service center.
680007 **680009** **680012** **680014** **680016** **680017**	The indicated error numbers show that the eBike battery is outside of the permissible operating temperature. The charging of the eBike battery is interrupted. As soon as the operating temperature returns to the permissible range, the charging process will start again.
903002 **903005**	Try to ride your eBike to a different location for better signal. If the problem persists, please get in touch with your service center.
112000	Log back in to the **eBike Flow** app and connect your smartphone. If the problem persists: – Reinstall the app and then start your eBike. – Then connect your smartphone with your eBike. If the problem persists: – Please contact your service center.
1B0002	Carry out the pairing process in the **eBike Flow** app again. Restart your eBike. If the problem persists, please get in touch with your service center.
1B7213 **1B7613** **1B7713** **1C7413** **1C7513**	Run a software update in the **eBike Flow** app. Restart your eBike. If the problem persists, please get in touch with your service center.

Number	Troubleshooting
1C7713	
5F0200	
F10005	To rectify the software incompatibility, all eBike components must have the latest software. – Connect all components belonging to the eBike, including the removable and optional components. – Run a software update with the **eBike Flow** app or ask a service center to do so. – Restart your eBike.

Critical errors

Critical errors are shown by the riding mode LED **(9)** and the battery charge indicator of the eBike battery **(12)** flashing red and then lighting up continuously. Follow the instructions in the table below if a critical error occurs.

Number	Instructions
6A0000	Connect all components belonging to the eBike, including the removable and optional components. Run a software update. Restart your eBike. If the problem persists, please get in touch with your service center.
F10004	Connect all components belonging to the eBike, including the removable and optional components. Run a software update. All components require the latest software version. Restart your eBike. If the problem persists, please get in touch with your service center.
890000	– Acknowledge the error code. – Restart the eBike. If the problem persists: – Acknowledge the error code. – Run the software update. – Restart the eBike. If the problem persists: – Please contact a service center.

Maintenance and Service

Maintenance/cleaning

⚠ WARNING

- ▶ **Do not open any of the components. Service should only be carried out at an authorized Bosch eBike dealer.** Failure to follow above warning can cause death or serious injury. Refer to your bicycle manual or component manual for all non-Bosch drive system components.
- ▶ **Do not submerge your eBike components in water, or wash with pressurized hose.** Your Bosch drive unit is designed to be water tight to rain water or non-pressure hose washing.
- ▶ **Do not paint any components of the Bosch drive system as they may cause premature failure of the component.**

The control unit must not be cleaned with pressurized water.

Keep the control unit clean. Dirt can cause faulty brightness detection.

Clean your control unit using a soft cloth dampened only with water. Do not use cleaning products of any kind.

- ▶ **Please make sure you have all repairs carried out by a service center.**

Note: If you are handing in your eBike to a service center for maintenance, it is recommended that you deactivate **<Lock & Alarm>**.

After-sales service and advice on using products

If you have any questions about the eBike and its components, contact a service center.

For contact details of service centers, please visit www.bosch-ebike.com.

More information

More information and videos about the eBike components and their functions can be found in the Bosch eBike Help Center.

Recycling Program

The individual eBike components as well as accessories and packaging should be recycled in an environmentally friendly manner.

Do not dispose of eBikes and their components with household waste.

You may recycle your Bosch battery pack by calling 1.800.822.8837.

Robert Bosch GmbH
72757 Reutlingen
Germany

www.bosch-ebike.com

kontakt@bosch.de

0 275 U07 3RC (2026.02) T / 71

LED Remote

BRC3600



en Original operating instructions

This manual contains important safety, performance and service information. Read and understand it along with the information provided to you by your bicycle manufacturer before using the product, and keep it for reference.

Table of contents

Introduction 2
About Warnings 2
General Warnings 2
Using your Manual 3
Operating the Control Unit 4
Safety instructions 4
Product description and specifications 7
Operation 9
Establishing a smartphone connection 12
Troubleshooting 15
Maintenance and Service 18
Maintenance/cleaning 18
After-sales service and advice on using products 18
More information 18
Recycling Program 18

Introduction

About Warnings

This manual contains many **DANGER**, **WARNING**, and **CAUTION** indicators concerning the consequences of failure to use, assemble, maintain, store, inspect and dispose of a Bosch-equipped eBike in a safe manner.

– The combination of the safety alert symbol and the word **DANGER** indicates a hazardous situation that, if not avoided, will result in death or serious injury.
– The combination of the safety alert symbol and the word **WARNING** indicates a hazardous situation that, if not avoided, could result in death or serious injury.
– The combination of the safety alert symbol and the word **CAUTION** indicates a hazardous situation that, if not avoided, could result in minor or moderate injury.

General Warnings



Read all safety warnings and all instructions. Failure to follow the warnings and instructions may result in death or serious injury.

Save all safety warnings and instructions for future reference.

The term **eBike battery** used in these operating instructions refers to all original Bosch eBike batteries from the system generation **the smart system**.

▶ **Read ALL accompanying manuals before riding the bike for the first time.** Your Bosch Drive System comes with additional manuals and documents provided by the manufacturer of the bicycle and other components. Failure to read and understand safety information can result in death or serious injury.

⚠ WARNING

▶ **This manual contains important safety, performance and service information.** Read it before you take the first ride on your new bicycle, and keep it for reference. The manual can also be found online at www.bosch-ebike.com.

▶ **This manual is intended to be read together with the separate user manual provided with your bicycle.** Be sure to read all provided documents including labels on the product before your first ride.

▶ **Take responsibility for your own SAFETY.** If you have any questions or do not understand something, consult with your dealer or the bicycle or component manufacturer.

▶ **Some eBike accessories may present a choking hazard to small children.** Keep these accessories away from children.

⚠ CAUTION

▶ **The Bosch Drive System adds weight to your bicycle which you may not be used to lift.** Avoid injury, use proper lifting techniques.

Using your Manual

In addition to the functions outlined here, changes to software relating to troubleshooting and functional modifications may be introduced at any time.

Graphics

The bicycle shown in this manual may differ slightly from your bicycle, but will be similar enough to help you understand our instructions.

RIGHT-HAND and LEFT-HAND sides are determined by facing in the direction the bicycle will travel when going forward. When you see a broken line (------), the item referred to is hidden from view.

Operating the Control Unit

Safety instructions



Read all the safety and general instructions. Failure to follow the warnings and instructions may result in electric shock, fire and/or serious injury.

Save all safety warnings and instructions for future reference.

The term **eBike battery** used in these operating instructions refers to all original Bosch eBike batteries from the system generation **the smart system**.

The terms **drive** and **drive unit** used in these operating instructions refer to all original Bosch drive units from the system generation **the smart system**.

- ▸ **Read and observe the safety warnings and instructions in all operating instructions of the eBike components and your eBike.**
- ▸ **Do not allow yourself to be distracted by the control unit's display, particularly by text overlays shown according to the situation.** The display of riding information does not absolve the rider of the need to exercise due caution. If you do not focus exclusively on the traffic, you risk being involved in an accident. If you want to change settings on your control unit, beyond just changing the riding mode, stop cycling to do so.
- ▸ **Do not attempt to secure the display or control unit while riding.**
- ▸ **Be aware that by selecting the drive mode you will also influence the amount of motor support from your bike.** Choose a drive mode that fits your cycling skills, test and familiarize yourself with drive modes and features in each mode before use.
- ▸ **Do not enter information or make selections while riding.** Interacting with the display or control unit while riding can lead to accidents causing serious injury or death. You must observe road and traffic conditions, and comply with traffic laws at all times.
- ▸ **Do not activate walk assistance function while riding on the bike.** Only use walk assistance function when pushing the eBike.
- ▸ **The walk assistance function must only be used when pushing the eBike.** There is a risk of injury if the wheels of the eBike are not in contact with the ground while using the walk assistance.
- ▸ **When the walk assistance is activated, the pedals may turn at the same time.** When the walk assistance function is activated, make sure that there is enough space between your legs and the turning pedals to avoid the risk of injury.
- ▸ **When using the walk assistance, make sure that you can control the eBike and that you can hold it securely at all times.** Under certain circumstances, the walk assistance may stop (e.g. if the pedals hit an obstacle or if you accidentally let go of the button on the control unit). The eBike may suddenly move backwards onto you or tip up. This poses a particular risk for you if there is an additional load. When using the walk assistance, do not bring the eBike into situations in which you cannot hold the eBike using your own strength.
- ▸ **Do not stand your eBike upside down on its handlebars and saddle if the control unit or its holder protrude from the handlebars.** This may irreparably damage the control unit or the holder.
- ▸ **Do not connect a charger to the eBike battery if the control unit or the display reports a critical error.** This may result in damage to your eBike battery. The eBike battery may catch fire, thereby resulting in serious burns and other injuries.
- ▸ **Caution lithium battery!** Do not store batteries in an environment with extremely high temperatures or extremely low air pressure, this can lead to an explosion or leakage of flammable liquids or gases. Do not dispose the battery in your regular household trash or a public trash receptacle. Batteries

that enter the regular waste stream can be damaged, leading to a fire resulting in serious injury, death, property damage and environmental contamination. Recycle the battery at an authorized recycling center or take them to a local household hazardous waste disposal facility.

- ▶ **The control unit features a wireless interface. Local operating restrictions, e.g. in airplanes or hospitals, must be adhered to.**
- ▶ **Caution!** When using the control unit with *Bluetooth*®, this may cause interference that affects other devices and systems, airplanes and medical devices (e.g. pacemakers, hearing aids). Similarly, the possibility that this may cause damage to humans and animals in the immediate vicinity cannot be completely excluded. Do not use the control unit with *Bluetooth*® in the vicinity of medical devices, gas stations, chemical plants, areas with a potentially explosive atmosphere or on blast sites. Do not use the control unit with *Bluetooth*® in airplanes. Avoid using the device in close proximity to your body over an extended period of time.
- ▶ The *Bluetooth*® wordmark and its logos are the registered trademarks and property of Bluetooth SIG, Inc. Any use of this wordmark/these logos by Robert Bosch GmbH, Bosch eBike Systems is under license.
- ▶ **Observe all national regulations which set out the approved use of eBikes.**

Safety warnings for charging the battery inside the control unit

- ▶ **Only charge the control unit with USB power source (5 V, 600 mA max) and USB cable rated at least 600 mA.** Using USB power source or USB cable not appropriately rated for the application may result in fire, explosion or personal injury.
- ▶ **Charge the control unit in temperatures above +32 degrees F (0 degrees C) and below +104 degrees F (40 degrees C). Store control unit in locations where temperatures will not exceed 104 degrees F (40 degrees C).** This is important to prevent serious damage to the battery in the control unit.
- ▶ **Do not expose control unit to fire or excessive temperature.** Exposure to fire or temperature above 212 °F (100 °C) may cause explosion.
- ▶ **Do not recharge the control unit (via USB port) in damp or wet environment.** Water entering control unit may result in electric shock or fire.
- ▶ **Never submerge control unit in fluid of any kind or allow fluid to enter them.** Corrosive or conductive fluid (such as seawater or industrial chemical or bleach containing products, etc.) can cause short circuit which may result in fire, personal injury and property damage.
- ▶ **Battery leakage may occur under extreme usage or temperature conditions. Avoid contact with skin and eyes.** The battery liquid is caustic and could cause chemical burns to tissues. If liquid comes in contact with skin, wash quickly with soap and water. If the liquid contacts your eyes, immediately flush eyes with water for a minimum of 15 minutes and seek medical attention.
- ▶ **Before each use, check the control unit, cable and plug.** If damage is detected, do not use the control unit. Damaged control unit, charging cables and plugs increase the risk of a fire, explosion and personal injury.
- ▶ **Do not disassemble control unit.** No user serviceable part inside. Incorrect reassembly or damage may result in fire or explosion.

NOTICE: This device complies with part 15 of the FCC Rules. Operation is subject to the following two conditions:

1. This device must not cause harmful interference, and
2. this device must accept any interference received, including interference that may cause undesired operation.

NOTICE: Changes or modifications made to this equipment not expressly approved by the Robert

Bosch GmbH may void the FCC authorization to operate this equipment.

NOTE: This equipment has been tested and found to comply with the limits for a Class B digital device, pursuant to Part 15 of the FCC Rules. These limits are designed to provide reasonable protection against harmful interference in a residential installation. This equipment generates, uses and can radiate radio frequency energy and, if not installed and used in accordance with the instructions, may cause harmful interference to radio communications. However, there is no guarantee that interference will not occur in a particular installation. If this equipment does cause harmful interference to radio or television reception, which can be determined by turning the equipment off and on, the user is encouraged to try to correct the interference by one or more of the following measures:

- Reorient or relocate the receiving antenna.
- Increase the separation between the equipment and receiver.
- Connect the equipment into an outlet on a circuit different from that to which the receiver is connected.
- Consult the dealer or an experienced radio/TV technician for help.

Radiofrequency radiation exposure Information:
The radiated output power of the device is far below the FCC radio frequency exposure limits. Nevertheless, the device shall be used in such a manner that the potential for human contact during normal operation is minimized.

This equipment complies with FCC radiation exposure limits set forth for an uncontrolled environment into portable exposure conditions without distance restrictions. This transmitter must not be co-located or operating in conjunction with any other antenna or transmitter.

ISED Notice (Canada)

This device contains licence-exempt transmitter(s)/ receiver(s) that comply with Innovation, Science and Economic Development Canada's licence-exempt RSS(s). Operation is subject to the following two conditions:

1. this device may not cause interference, and
2. this device must accept any interference, including interference that may cause undesired operation of the device.

This equipment complies with Canada radiation exposure limits set forth for an uncontrolled environment into portable exposure conditions without distance restrictions. This transmitter must not be co-located or operating in conjunction with any other antenna or transmitter.

Privacy notice

When connecting the eBike to the **Bosch DiagnosticTool 3** or when exchanging eBike components, technical information about your eBike (e.g. bicycle manufacturer, model, bike ID, configuration data) as well as regarding the use of the eBike (e.g. total travel time, energy consumption, temperature) is transmitted to Bosch eBike Systems (Robert Bosch GmbH) for processing your request, in service cases and for the purposes of product improvement. You can find further information about data processing at www.bosch-ebike.com/privacy-full.

Product description and specifications

Product Features

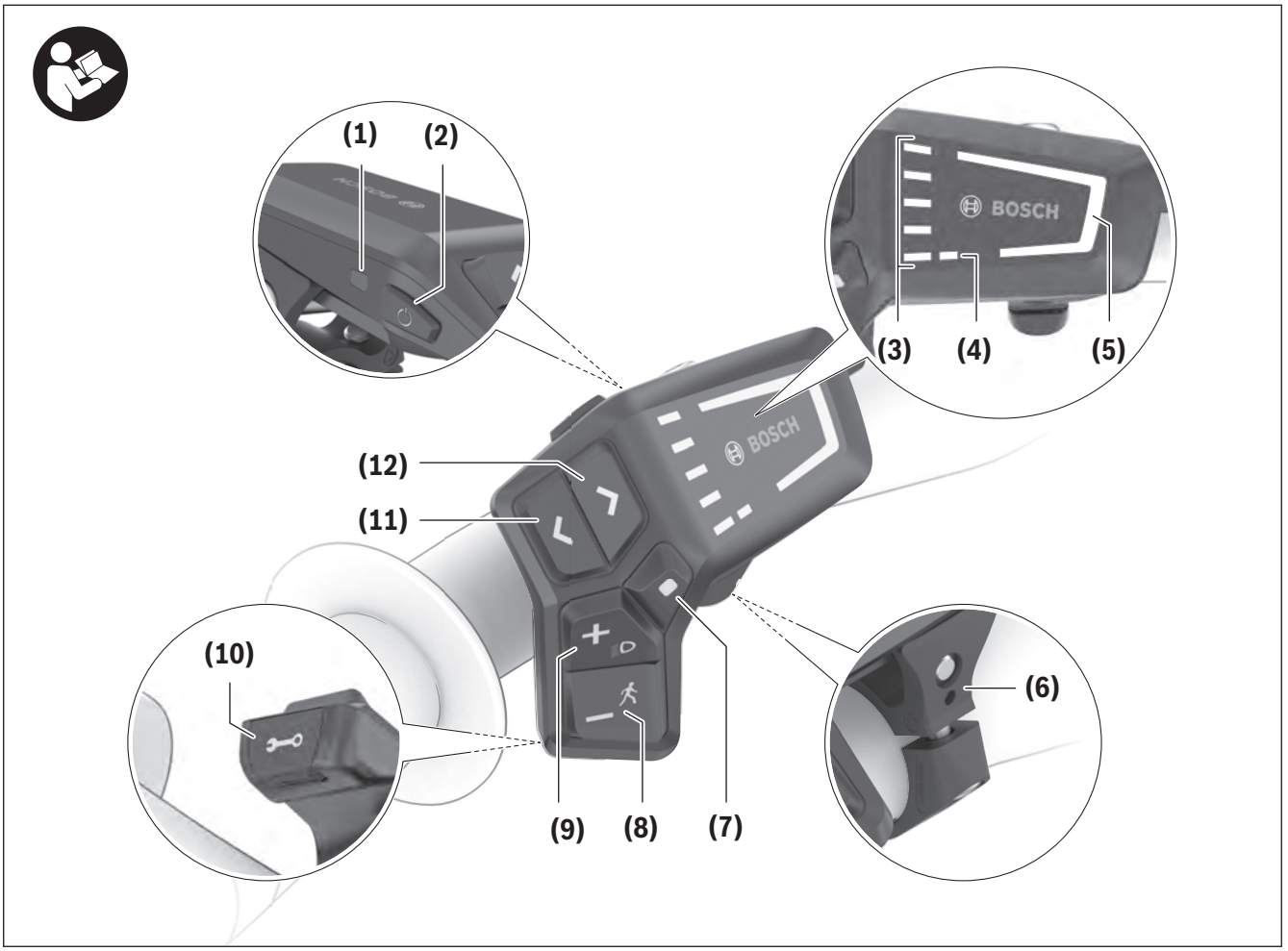

All illustrations of bike parts except for the drive unit, display (including control unit), speed sensor, and the corresponding holders are a schematic representation and may differ on your eBike.

(1) Ambient light sensor
(2) ON/OFF button
(3) Battery charge indicator of the eBike battery
(4) ABS LED (optional)
(5) Riding mode LED
(6) Holder
(7) Select button
(8) Button for reducing the assistance level **–**/ walk assistance/hill-start assist
(9) Button for increasing the assistance level **+**/ bicycle lights
(10) Diagnostics connection (for servicing purposes only)
(11) Button to reduce brightness/ go back
(12) Button to increase brightness/ go forward

Intended use

The **LED Remote** control unit is designed for controlling an eBike/display from the system generation **the smart system**.

You can also use it to control the **eBike Flow** app.

In order to be able to use the control unit to its fullest extent, a compatible smartphone with the **eBike Flow** app is required.

You can connect the **LED Remote** control unit with your smartphone via *Bluetooth*®.



Depending on the operating system of the smartphone, the **eBike Flow** app can be downloaded free of charge from the Apple App Store or Google Play Store.

Scan the code with your smartphone to download the **eBike Flow** app.

Technical data

Control unit		LED Remote
Product code		BRC3600
Max. charging current of USB port[A)]	mA	600
USB port charging voltage[A)]	V	5
USB charging cable[B)]		USB Type-C®[C)]
Charging temperature	°F °C	+32 to +104 0 to +40
Operating temperature	°F °C	+23 to +104 −5 to +40
Storage temperature	°F °C	+50 to +104 +10 to +40
Diagnostic interface		USB Type-C®[C)]
Internal lithium-ion battery	V mAh	3.7 75
Protection rating		IP55
Dimensions (without fastening)	in mm	2.9 × 2.1 × 1.4 74 × 53 × 35
Weight	lbs g	0.07 30
Bluetooth® Low Energy 5.0		
– Frequency	MHz	2400–2480
– Transmission power	mW	1

A) Information for charging the **LED Remote** control unit; external devices cannot be charged.

B) Not included with the product as standard

C) USB Type-C® and USB-C® are trademarks of USB Implementers Forum.

The license information for the product is available at the following Internet address: www.bosch-ebike.com/licences

Operation

Requirements

The eBike can then only be switched on when the following requirements are met:

- A sufficiently charged eBike battery is inserted (see operating instructions for the eBike battery from the system generation **the smart system**).
- The speed sensor, if provided, is connected properly (see operating instructions for the drive unit from the system generation **the smart system**).

Before setting off, make sure that you can easily reach the buttons on the control unit. It is recommended to align the plus/minus buttons level so that it is almost perpendicular to the ground.

Note: Improvements and added functionality are regularly introduced through software updates. Therefore, the displays and functions shown here may differ from what is actually displayed.

Control unit power supply

If a sufficiently charged eBike battery is inserted into the eBike and the eBike is switched on, the internal battery of the control unit is powered and charged.

If the state of charge of the internal battery of the control unit is very low and the eBike cannot be switched on after a long period of inactivity, you can charge the internal battery of the control unit via the diagnostics connection **(10)** with a USB Type-C® cable using a power bank or another suitable power source (charging voltage **5 V**; charging current max.**600 mA**).

The control unit's internal battery is charged via an external supply that meets the ES1 and PS2 limit values in accordance with IEC 62368-1.

Always close the flap of the diagnostics connection **(10)** so that no dust or moisture can enter.

Switching the eBike on/off

To **switch on** the eBike, briefly press the on/off button **(2)**. After the starting animation, the state of charge of the eBike battery is displayed in color with the battery charge indicator **(3)** and the set riding mode with the **(5)** display. The eBike is ready to ride.

The display screen brightness is controlled by the ambient light sensor **(1)**. Therefore, do not cover the ambient light sensor **(1)**.

The drive is activated as soon as you start pedaling (except in the **OFF** riding mode). The drive power varies depending on the riding mode set.

As soon as you stop in normal operation, press the pedals, or as soon as you have reached a speed of **20/28 mph (32/45 km/h)**, the assistance will be switched off by the drive. The drive is automatically reactivated as soon as you press the pedals and the speed is below **20/28 mph (32/45 km/h)**.

To **switch off** the eBike, briefly press the on/off button **(2)** (< 3 s). The battery charge indicator of the eBike battery **(3)** and the riding mode LED **(5)** go out.

If no power is requested from the drive for approx. **10** minutes (e.g. due to the eBike being stationary) and no button is pressed, the eBike switches off automatically.

Battery charge indicator of the eBike battery

In the battery charge indicator of the eBike battery **(3)**, each ice-blue bar represents 20 % capacity and each white bar represents 10 % capacity. The topmost bar shows the maximum capacity.

Example: Four ice-blue bars and one white bar are displayed. The state of charge is between 81 % and 90 %.

If capacity is low, both of the lower displays change color:

Bar	Capacity
2 × orange	30 % to 21 %
1 × orange	20 % to 11 %
1 × red	10 % to reserve
1 × red flashing	Reserve to empty

If the eBike battery is being charged, the topmost bar on the battery charge indicator of the eBike battery **(3)** flashes.

Outside of the eBike, the eBike battery's state of charge is indicated by the LEDs on the eBike battery.

Selecting the Riding Mode

You can set how much the eBike drive assists you while pedaling on the control unit using the reduce assistance level **– (8)** and increase assistance level **+ (9)** buttons. The riding mode can be changed even while cycling, and is displayed in color.

Additional riding modes can be activated via the **eBike Flow** app or at your service center if this is provided by the bicycle manufacturer.

Note: The riding modes available depend on the respective drive unit. The intensity and duration of the assistance vary depending on the riding mode.

Riding mode	Notes
OFF	Drive assistance is switched off. The eBike can just be moved by pedaling, as with a normal bicycle.
ECO	Effective assistance with maximum efficiency, for maximum range
ECO+	Range-optimized riding mode that only switches on the drive assistance above a certain rider performance; for natural cycling and for a maximum range
TOUR	Steady assistance, long range for touring
TOUR+	Dynamic assistance for natural, sporty cycling
eMTB[A)]	Optimal assistance whatever the terrain, rapid acceleration when starting from a standstill, improved dynamics and top performance including “Extended Boost”
eMTB+[A)]	Dynamic support to the maximum – at the perfect level and with up to 100 % more “Extended Boost” – for even more fun on trails
SPORT	Powerful assistance, for mountain biking and for cycling in urban traffic
TURBO	Maximum assistance even at a high cadence, for biking sports
AUTO	The assistance adapts dynamically to the riding situation.
RACE[A)]	Maximum assistance on the eMTB racetrack; very quick response and maximum "Extended Boost" for the best possible performance in competitive situations
CARGO	Steady, powerful assistance for safely transporting heavy weights
SPRINT	Dynamic assistance according to cadence – for athletic eGravel and eRoad cycling with rapid sprints and frequent ascents

A) The "Extended Boost" provides a controlled pushing force over a short distance once pedaling is stopped.

Adjusting the Riding Mode

The riding modes can be adapted within certain limits using the **eBike Flow** app. This gives you the option of adjusting your eBike to your personal requirements.

It is not possible to create a completely new riding mode. You can only adjust the riding modes that have been enabled by the bicycle manufacturer on your system.

In addition, restrictions in your country may mean that it is not possible to adjust a particular riding mode.

The following parameters are available for making adjustments:

- Assistance in relation to the base value of the riding mode (within the legal requirements)
- Drive response
- Top limit speed (within the legal requirements)
- Maximum torque (within the limits of the drive)

Note: Please ensure that your modified riding mode retains the position, name and color on all displays and controls.

Interaction of the drive unit with the gear-shifting

You should shift through gears on an eBike in the same manner as when using a normal bicycle (observe the operating instructions of your eBike with regard to this point).

Irrespective of the type of gear shifting, it is advisable that you briefly reduce the pressure on the pedals when changing gear. This will aid gear shifting and reduce wear on the powertrain.

By selecting the correct gear, you can increase your speed and range while applying the same amount of force.

For this reason, follow the gear change recommendations shown on your display.

Switching bike lights on/off

Before starting each journey, check that your bike lights are working correctly.

To **switch on** the bicycle lights, press the bicycle lights button **(9)** for more than 1 s.

You can use the "Reduce brightness" **(11)** and "Increase brightness" **(12)** buttons to control the brightness of the LEDs on the control unit.

Switching the walk assistance on/off

The walk assistance can make it easier for you to push the eBike. The maximum speed of the walk assistance is **2.5 mph (4 km/h)**. The bicycle manufacturer can adjust the default so that it is lower and, if necessary, it can also be adjusted by a service center.

- ▶ **The walk assistance function must only be used when pushing the eBike.** There is a risk of injury if the wheels of the eBike are not in contact with the ground while using the walk assistance.
- ▶ **If the selected gear is too high, the drive unit may not be able to move the eBike or activate the roll-away lock.**

Note: The walk assistance function is deactivated in the **OFF** riding mode.

To **activate** walk assistance, press and hold the walk assistance button **(8)** for more than 1 s.

After activation, the continuous ice-blue bars of the battery charge indicator **(3)** show that the drive is beginning to push.

If you release the walk assistance button **(8)**, walk assistance stops. During this, the battery charge indicator **(3)** changes to continuous white bars. You can reactivate walk assistance straight away by pressing the walk assistance **(8)** button within 10 s.

If you do not reactivate walk assistance within 10 s, walk assistance automatically switches off.

Walk assistance is always ended if

- The rear wheel jams,
- The bicycle cannot move over ridges,
- A body part is blocking the bike crank,
- An obstacle continues to turn the crank,
- You start pedaling,
- The increase assistance level **+**/bicycle lights **(9)** button or ON/OFF button **(2)** is pressed.

Walk assistance has a roll-away lock, i.e. even after walk assistance has been used, rolling backwards is actively curbed by the drive for a few seconds, and you cannot push the eBike backwards or can only do so with difficulty.

The roll-away lock is immediately deactivated by pressing the increase assistance level **+**/bicycle lights **(9)** button.

The walk assistance function is subject to local regulations; the way it works may therefore differ from the description above. It can also be deactivated.

Switching Hill-Start Assist On and Off

Hill-start assist makes it easier to start riding on hills.

To **activate** hill-start assist, place your foot on the pedal so that your eBike detects that you would like to start riding. Then press the hill-start assist button **(8)** for more than 1 s.

Note: Follow the order for actions when activating the hill-start assist button. The walk assistance will

activate if you first press the hill-start assist button **(8)** and then place your foot on the pedal.

Once you have successfully activated hill-start assist, let go of the hill-start assist button **(8)** again. Once you have safely started riding, the hill-start assist will deactivate automatically and you will continue riding in the set riding mode. You can end hill-start assist at any time by taking your foot off the pedal.

You can then reactivate hill-start assist within 10 s by placing your foot back on the pedal. This will be shown on your display. It is not necessary to press the hill-start assist button **(8)** again. If you press the hill-start assist button **(8)** within 10 s, the countdown will be reset once and you will again have 10 s to activate hill-start assist.

Hill-start assist has a roll-away lock, i.e. even after hill-start assist has been used, rolling backwards is actively curbed by the drive for a few seconds, and this prevents the eBike from rolling backwards unintentionally.

The hill-start assist function is subject to local regulations; the way it works may therefore differ from the description above, or the function may even be deactivated completely.

ABS – Anti-lock braking system (optional)

If the eBike is equipped with a Bosch eBike ABS from the system generation **the smart system**, the ABS LED **(4)** lights up when the eBike is started.

After moving off, the ABS internally checks its functionality and the ABS LED goes off.

In the event of a fault, the ABS LED **(4)** lights up, together with the orange flashing riding mode LED **(5)**. You can acknowledge the error with the select button **(7)** and the flashing riding mode LED **(5)** will go out. While the ABS LED **(4)** is lit up, the ABS is not in operation.

For details on the ABS and how it works, including how it acts during a trick, please refer to the ABS operating instructions.

Establishing a smartphone connection

In order to be able to use the following eBike functions, a smartphone with the **eBike Flow** app is required.

Connection to the app occurs via a *Bluetooth*® connection.

Switch on the eBike and wait for the starting animation. Do not ride the eBike.

Begin *Bluetooth*® pairing by pressing and holding (> 3 s) the on/off button **(2)**. Release the on/off button **(2)** as soon as the topmost bar on the battery charge indicator of the eBike battery **(3)** indicates the pairing process by flashing blue.

Confirm the connection request in the app.

Software updates

Software updates must be started manually in the **eBike Flow** app.

Software updates are transferred from the app to the control unit in the background as soon as it is connected to the app. During the update process, the green flashing of the battery charge indicator of the eBike battery **(3)** indicates the progress. The eBike is then restarted.

You can control the software updates via the **eBike Flow** app.

Activity tracking and digital eBike garage

In order to record activities, it is necessary to register and log into the **eBike Flow** app.

To record activities, you must consent to the storage of your location data in the app. Without this, your activities cannot be recorded in the app. For location data to be recorded, you must be logged in to a user account.

You can add a total of six eBikes to one user account in the **eBike Flow** app.

eBike Lock

The **<eBike Lock>** can be set up for any eBike via the **eBike Flow** app under **<Settings>** → **<Lock & Alarm>**. In the process, a key for unlocking the eBike is saved on the smartphone and/or the **Kiox 300/ Kiox 500** display.

The **<eBike Lock>** is automatically enabled in the following cases:

– The eBike is switched off via the control unit
– The eBike is switched off automatically

If the eBike is switched on and the smartphone is connected to the eBike via *Bluetooth*®, or the pre-set display is fitted in the holder, the eBike will be unlocked.

<eBike Lock> is linked to your **user account**.

If you lose your smartphone, you can log in to your user account on the **eBike Flow** app using another smartphone and then unlock the eBike.

If the display is lost, you can reset all the digital keys in the **<Lock & Alarm>** menu item in the **eBike Flow** app.

Caution! If you select a setting in the app that could have negative consequences in combination with the **<eBike Lock>** (e.g. deleting your eBike or user account), you will be shown warning messages beforehand. **Please read through these thoroughly and adhere to the warnings that are issued (e.g. before deleting your eBike or user account).**

Setting up <eBike Lock>

In order to be able to set up the **<eBike Lock>**, the following conditions must be fulfilled:

– The **eBike Flow** app has been installed.
– A user account has been created.
– The eBike is not currently updating.
– The eBike is connected to the smartphone via *Bluetooth*®.
– The eBike is stationary.
– The smartphone is connected to the Internet.
– The eBike battery is sufficiently charged and the charging cable is not connected.

You can set up **<eBike Lock>** in the **eBike Flow** app under the **<Lock & Alarm>** menu item.

The drive unit of your eBike only provides support if the smartphone is connected to the eBike via *Bluetooth*® or the display is placed in the holder when the eBike is switched on. If the smartphone is used as a key, your smartphone must have *Bluetooth*® switched on, and the **eBike Flow** app must be active in the background. When the **<eBike Lock>** is activated, you can continue to use your eBike without assistance from the drive unit.

Compatibility

The **<eBike Lock>** is compatible with all Bosch drive units from the system generation **the smart system**.

How it works

In combination with the **<eBike Lock>**, the smartphone and the display work like a key for the drive unit. The **<eBike Lock>** is activated by switching off the eBike. When switching on, the eBike checks if any pre-set key is available. A white LED flashes on the **LED Remote** control unit, and a lock symbol is shown on the display.

Note: The **<eBike Lock>** alone does not provide adequate theft protection; it is simply a supplement to a mechanical lock. The **<eBike Lock>** does not provide any form of mechanical lock for the eBike. Only the assistance from the drive unit is deactivated. The drive unit will be unlocked for as long as the smartphone is connected to the eBike via *Bluetooth*® or the display is placed in the holder.

If you want to give third parties temporary or permanent access to your eBike, share one of the pre-set digital keys (display/smartphone). As a result, the <eBike Lock> is still active. If you want to take your eBike to a service, the <eBike Lock> can be deactivated in the eBike Flow app in the <Settings> menu item. If you wish to sell your eBike, you will also need to delete the eBike from

your user account in the **eBike Flow** app in the **<Settings>** menu item.

When the eBike is switched off, the drive unit will emit a "Lock" sound (i.e. an audio signal that is played **once**) to indicate that the assistance from the drive unit is switched off.

When the eBike is switched on, the drive unit will emit two "Unlock" sounds (i.e. an audio signal that is played **twice**) to indicate that the assistance from the drive unit is enabled again.

The "Lock" sound will help you determine whether or not the **<eBike Lock>** on your eBike is active. The audio signal is activated by default, but it can be deactivated in the **eBike Flow** app in the **<Locking sound>** menu item by selecting the lock symbol under your eBike.

Note: If you can no longer set up or switch off the **<eBike Lock>**, please contact your service center.

Replacing the Smartphone

1. Install the **eBike Flow** app on the new smartphone.
2. Log in with **the same** user account that was used to activate the **<eBike Lock>**.
3. The **<eBike Lock>** is displayed as set up in the **eBike Flow** app.

More information about this can be found in the **eBike Flow** app or in the Bosch eBike Help Center on the website www.bosch-ebike.com/help-center.

Flow+ subscription functions

For the following functions, a **Flow+ subscription** is required. Fees may be payable for this.

Information about **Flow+ subscription** and details on individual services can be found in the **eBike Flow** app or in the Bosch eBike Help Center on the website www.bosch-ebike.com/help-center.

Battery Lock

The **<Battery Lock>** can be set up for any eBike via the **eBike Flow** app under **<Settings>** → **<Lock & Alarm>**.

In addition to the drive unit, the eBike battery can be locked when the eBike is switched off using **<Battery Lock>**. The eBike battery will only be unlocked again when the pre-set key (smartphone and/or **Kiox 300/ Kiox 500** display) is present when the eBike is switched on.

Share eBike

With the **eBike Flow** app, you can share your eBike and its digital functions with up to 5 other people. You remain in control of the settings, functions and updates. The people you choose to share with can only use the digital functions preselected by you. In order for you to be able to share the eBike, “share eBike” must be registered to you in the **eBike Flow** app and you must hold an active **Flow+ subscription**. The eBike software must be up to date. Under **<Settings>** in the **eBike Flow** app, you can create an invitation link and send this to the people you want to share with. Once they have accepted the invitation, they can connect the shared eBike with their own **eBike Flow** app user account.

Troubleshooting

The control unit shows whether critical errors or less critical errors occur on the eBike.

The error messages generated by the eBike can be read via the **eBike Flow** app or by your service center.

Via a link in the **eBike Flow** app, information about the error and support for rectifying the error can be displayed.

Less critical errors

Less critical errors are shown by orange flashing, followed by the orange riding mode LED **(5)** lighting up continuously. Pressing the select button **(7)** confirms the error and the riding mode LED **(5)** once again continuously shows the color of the set riding mode.

You can use the following table to rectify the errors yourself if necessary. Otherwise, please contact your service center.

Number	Troubleshooting
503009	Check your display, the cabling and any power consumers connected to the display. If the problem persists, please get in touch with your service center.
523003	Check that the rim magnet is firmly attached to the valve. Then restart your eBike and check the display after a short ride. If the problem persists, please get in touch with your service center.
523006	Check the rim magnet and spoke magnet, if present. Then, restart your eBike. If the problem persists, please get in touch with your service center.
853201	
523005	The indicated error numbers show that the sensors are struggling to detect the magnetic field. See whether you have lost the magnet while riding. If you are using a magnet sensor, check that the sensor and magnet have been properly installed. Also make sure that the cable to the sensor is not damaged. If you are using a rim magnet, make sure that you do not have any magnetic field interference in the vicinity of the drive unit.
514001	
514002	
514003	
514006	
650001	Check that the eBike battery is sitting correctly. Check the electrical contacts on the eBike battery and the eBike battery holder for signs of corrosion. If necessary, clean the contacts using a soft, damp cloth and leave to dry. Run an eBike update, if available, via the **eBike Flow** app. Restart your eBike. If the problem persists, please get in touch with your service center.
660001	Restart your eBike. If the problem persists, do not charge your eBike battery and do not continue to use it. Please contact a service center.
660002	Do not remove the eBike battery from the eBike. Connect the eBike battery to a charger and wait at least 10 s. Re-insert the eBike battery into the eBike. Restart your eBike.

Number	Troubleshooting
670001	Disconnect the charger from your eBike and from the mains power supply and wait at least 5 s. Then reconnect the charger to restart the charging process. **Notes:** – Do not connect the charger's mains cable to the mains power supply while your eBike or the eBike battery are still starting up/shutting down. – Do not press the on/off button on the eBike battery while the mains cable of the charger is being connected or is already connected to the mains power supply. – Do not insert and remove the charger plug in quick succession. If the problem persists: – Use another charger in order to rule out charger errors. – Run an eBike update, if available, via the **eBike Flow** app. If the problem occurs while charging on the go: – Check whether the mains power supply meets the input parameters on the charger's type plate. – If the problem persists, please get in touch with your service center.
680007 **680009** **680012** **680014** **680016** **680017**	The indicated error numbers show that the eBike battery is outside of the permissible operating temperature. The charging of the eBike battery is interrupted. As soon as the operating temperature returns to the permissible range, the charging process will start again.
903002 **903005**	Try to ride your eBike to a different location for better signal. If the problem persists, please get in touch with your service center.
112000	Log back in to the **eBike Flow** app and connect your smartphone. If the problem persists: – Reinstall the app and then start your eBike. – Then connect your smartphone with your eBike. If the problem persists: – Please contact your service center.
1B0002	Carry out the pairing process in the **eBike Flow** app again. Restart your eBike. If the problem persists, please get in touch with your service center.
1B7213 **1B7613** **1B7713** **1C7413** **1C7513**	Run a software update in the **eBike Flow** app. Restart your eBike. If the problem persists, please get in touch with your service center.

Number	Troubleshooting
1C7713	
5F0200	
F10005	To rectify the software incompatibility, all eBike components must have the latest software. – Connect all components belonging to the eBike, including the removable and optional components. – Run a software update with the **eBike Flow** app or ask a service center to do so. – Restart your eBike.

Critical errors

Critical errors are shown by the riding mode LED **(5)** and the battery charge indicator of the eBike battery **(3)** flashing red and then lighting up continuously. Follow the instructions in the table below if a critical error occurs.

Number	Instructions
6A0000	Connect all components belonging to the eBike, including the removable and optional components. Run a software update. Restart your eBike. If the problem persists, please get in touch with your service center.
F10004	Connect all components belonging to the eBike, including the removable and optional components. Run a software update. All components require the latest software version. Restart your eBike. If the problem persists, please get in touch with your service center.
890000	– Acknowledge the error code. – Restart the eBike. If the problem persists: – Acknowledge the error code. – Run the software update. – Restart the eBike. If the problem persists: – Please contact a service center.

Maintenance and Service

Maintenance/cleaning

⚠ WARNING

- ▶ **Do not open any of the components. Service should only be carried out at an authorized Bosch eBike dealer.** Failure to follow above warning can cause death or serious injury. Refer to your bicycle manual or component manual for all non-Bosch drive system components.
- ▶ **Do not submerge your eBike components in water, or wash with pressurized hose.** Your Bosch drive unit is designed to be water tight to rain water or non-pressure hose washing.
- ▶ **Do not paint any components of the Bosch drive system as they may cause premature failure of the component.**

The control unit must not be cleaned with pressurized water.

Keep the control unit clean. Dirt can cause faulty brightness detection.

Clean your control unit using a soft cloth dampened only with water. Do not use cleaning products of any kind.

- ▶ **Please make sure you have all repairs carried out by a service center.**

Note: If you are handing in your eBike to a service center for maintenance, it is recommended that you deactivate **<Lock & Alarm>**.

Note: If you do not use the **LED Remote** control unit for a long time, charge it in accordance with (see "Control unit power supply", page English – 9).

After-sales service and advice on using products

If you have any questions about the eBike and its components, contact a service center.

For contact details of service centers, please visit www.bosch-ebike.com.

More information

More information and videos about the eBike components and their functions can be found in the Bosch eBike Help Center.

Recycling Program



The individual eBike components as well as accessories and packaging should be recycled in an environmentally friendly manner.

Do not dispose of eBikes and their components with household waste.



You may recycle your Bosch battery pack by calling 1.800.822.8837.

Robert Bosch GmbH
72757 Reutlingen
Germany

www.bosch-ebike.com

kontakt@bosch.de

0 275 U07 3RL (2026.02) T / 62

LED Controller

BRC3610



en Original operating instructions

This manual contains important safety, performance and service information. Read and understand it along with the information provided to you by your bicycle manufacturer before using the product, and keep it for reference.

Table of Contents

Introduction 2
About Warnings 2
General Warnings 2
Using your Manual 3
Operating the Control Unit 4
Safety instructions 4
Product description and specifications 8
Operation 10
Establishing a smartphone connection 13
Troubleshooting 16
Maintenance and Service 19
Maintenance/cleaning 19
After-sales service and advice on using products 19
More information 19
Recycling Program 19

Introduction

About Warnings

This manual contains many **DANGER**, **WARNING**, and **CAUTION** indicators concerning the consequences of failure to use, assemble, maintain, store, inspect and dispose of a Bosch-equipped eBike in a safe manner.

– The combination of the safety alert symbol and the word **DANGER** indicates a hazardous situation that, if not avoided, will result in death or serious injury.
– The combination of the safety alert symbol and the word **WARNING** indicates a hazardous situation that, if not avoided, could result in death or serious injury.
– The combination of the safety alert symbol and the word **CAUTION** indicates a hazardous situation that, if not avoided, could result in minor or moderate injury.

General Warnings



Read all safety warnings and all instructions. Failure to follow the warnings and instructions may result in death or serious injury.

Save all safety warnings and instructions for future reference.

The term **eBike battery** used in these operating instructions refers to all original Bosch eBike batteries from the system generation **the smart system**.

▶ **Read ALL accompanying manuals before riding the bike for the first time.** Your Bosch Drive System comes with additional manuals and documents provided by the manufacturer of the bicycle and other components. Failure to read and understand safety information can result in death or serious injury.

⚠ WARNING

▶ **This manual contains important safety, performance and service information.** Read it before you take the first ride on your new bicycle, and keep it for reference. The manual can also be found online at www.bosch-ebike.com.

▶ **This manual is intended to be read together with the separate user manual provided with your bicycle.** Be sure to read all provided documents including labels on the product before your first ride.

▶ **Take responsibility for your own SAFETY.** If you have any questions or do not understand something, consult with your dealer or the bicycle or component manufacturer.

▶ **Some eBike accessories may present a choking hazard to small children.** Keep these accessories away from children.

⚠ CAUTION

▶ **The Bosch Drive System adds weight to your bicycle which you may not be used to lift.** Avoid injury, use proper lifting techniques.

Using your Manual

In addition to the functions outlined here, changes to software relating to troubleshooting and functional modifications may be introduced at any time.

Graphics

The bicycle shown in this manual may differ slightly from your bicycle, but will be similar enough to help you understand our instructions.

RIGHT-HAND and LEFT-HAND sides are determined by facing in the direction the bicycle will travel when going forward. When you see a broken line (------), the item referred to is hidden from view.

Operating the Control Unit

Safety instructions



Read all the safety and general instructions. Failure to follow the warnings and instructions may result in electric shock, fire and/or serious injury.

Save all safety warnings and instructions for future reference.

The term **eBike battery** used in these operating instructions refers to all original Bosch eBike batteries from the system generation **the smart system**.

The terms **drive** and **drive unit** used in these operating instructions refer to all original Bosch drive units from the system generation **the smart system**.

- ▸ **Read and observe the safety warnings and instructions in all operating instructions of the eBike components and your eBike.**
- ▸ **Do not allow yourself to be distracted by the control unit's display, particularly by text overlays shown according to the situation.** The display of riding information does not absolve the rider of the need to exercise due caution. If you do not focus exclusively on the traffic, you risk being involved in an accident. If you want to change settings on your control unit, beyond just changing the riding mode, stop cycling to do so.
- ▸ **Do not attempt to secure the display or control unit while riding.**
- ▸ **Be aware that by selecting the drive mode you will also influence the amount of motor support from your bike.** Choose a drive mode that fits your cycling skills, test and familiarize yourself with drive modes and features in each mode before use.
- ▸ **Do not enter information or make selections while riding.** Interacting with the display or control unit while riding can lead to accidents causing serious injury or death. You must observe road and traffic conditions, and comply with traffic laws at all times.
- ▸ **Do not activate walk assistance function while riding on the bike.** Only use walk assistance function when pushing the eBike.
- ▸ **The walk assistance function must only be used when pushing the eBike.** There is a risk of injury if the wheels of the eBike are not in contact with the ground while using the walk assistance.
- ▸ **When the walk assistance is activated, the pedals may turn at the same time.** When the walk assistance function is activated, make sure that there is enough space between your legs and the turning pedals to avoid the risk of injury.
- ▸ **When using the walk assistance, make sure that you can control the eBike and that you can hold it securely at all times.** Under certain circumstances, the walk assistance may stop (e.g. if the pedals hit an obstacle or if you accidentally let go of the button on the control unit). The eBike may suddenly move backwards onto you or tip up. This poses a particular risk for you if there is an additional load. When using the walk assistance, do not bring the eBike into situations in which you cannot hold the eBike using your own strength.
- ▸ **Do not stand your eBike upside down on its handlebars and saddle if the control unit or its holder protrude from the handlebars.** This may irreparably damage the control unit or the holder.
- ▸ **Do not connect a charger to the eBike battery if the control unit or the display reports a critical error.** This may result in damage to your eBike battery. The eBike battery may catch fire, thereby resulting in serious burns and other injuries.
- ▸ **Caution lithium battery!** Do not store batteries in an environment with extremely high temperatures or extremely low air pressure, this can lead to an explosion or leakage of flammable liquids or gases. Do not dispose the battery in your regular household trash or a public trash receptacle. Batteries

that enter the regular waste stream can be damaged, leading to a fire resulting in serious injury, death, property damage and environmental contamination. Recycle the battery at an authorized recycling center or take them to a local household hazardous waste disposal facility.

- ▶ **The control unit features a wireless interface. Local operating restrictions, e.g. in airplanes or hospitals, must be adhered to.**
- ▶ **Caution!** When using the control unit with *Bluetooth*®, this may cause interference that affects other devices and systems, airplanes and medical devices (e.g. pacemakers, hearing aids). Similarly, the possibility that this may cause damage to humans and animals in the immediate vicinity cannot be completely excluded. Do not use the control unit with *Bluetooth*® in the vicinity of medical devices, gas stations, chemical plants, areas with a potentially explosive atmosphere or on blast sites. Do not use the control unit with *Bluetooth*® in airplanes. Avoid using the device in close proximity to your body over an extended period of time.
- ▶ The *Bluetooth*® wordmark and its logos are the registered trademarks and property of Bluetooth SIG, Inc. Any use of this wordmark/these logos by Robert Bosch GmbH, Bosch eBike Systems is under license.
- ▶ **Observe all national regulations which set out the approved use of eBikes.**

Safety warnings for charging the battery inside the control unit

- ▶ **Only charge the control unit with USB power source (5 V, 600 mA max) and USB cable rated at least 600 mA.** Using USB power source or USB cable not appropriately rated for the application may result in fire, explosion or personal injury.
- ▶ **Charge the control unit in temperatures above +32 degrees F (0 degrees C) and below +104 degrees F (40 degrees C). Store control unit in locations where temperatures will not exceed 104 degrees F (40 degrees C).** This is important to prevent serious damage to the battery in the control unit.
- ▶ **Do not expose control unit to fire or excessive temperature.** Exposure to fire or temperature above 212 °F (100 °C) may cause explosion.
- ▶ **Do not recharge the control unit (via USB port) in damp or wet environment.** Water entering control unit may result in electric shock or fire.
- ▶ **Never submerge control unit in fluid of any kind or allow fluid to enter them.** Corrosive or conductive fluid (such as seawater or industrial chemical or bleach containing products, etc.) can cause short circuit which may result in fire, personal injury and property damage.
- ▶ **Battery leakage may occur under extreme usage or temperature conditions. Avoid contact with skin and eyes.** The battery liquid is caustic and could cause chemical burns to tissues. If liquid comes in contact with skin, wash quickly with soap and water. If the liquid contacts your eyes, immediately flush eyes with water for a minimum of 15 minutes and seek medical attention.
- ▶ **Before each use, check the control unit, cable and plug.** If damage is detected, do not use the control unit. Damaged control unit, charging cables and plugs increase the risk of a fire, explosion and personal injury.
- ▶ **Do not disassemble control unit.** No user serviceable part inside. Incorrect reassembly or damage may result in fire or explosion.

Safety instructions for button/coin cells



⚠ WARNING

INGESTION HAZARD:
This product contains a button cell or coin battery.
DEATH or serious injury can occur if ingested.
A swallowed button cell or coin battery can cause **Internal Chemical Burns** in as little as **2 hours**.

KEEP new and used batteries **OUT OF REACH of CHILDREN**.

Seek immediate medical attention if a battery is suspected to be swallowed or inserted inside any part of the body.

Remove and immediately recycle or dispose of used batteries according to local regulations and keep away from children. Do NOT dispose of batteries in household trash or incinerate.

Even used batteries may cause severe injury or death. Call a local poison control center for treatment information.

Do not force discharge, recharge, disassemble, heat above 104 °F (40 °C) or incinerate. Doing so may result in injury due to venting, leakage or explosion resulting in chemical burns.

This product uses a battery that can be replaced, though the coin cell battery inside the battery is not user replaceable.

Ensure the batteries are installed correctly according to polarity (+ and −).

Do not mix old and new batteries, different brands or types of batteries, such as alkaline, carbon-zinc, or rechargeable batteries.

Remove and immediately recycle or dispose of batteries from equipment not used for an extended period of time according to local regulations.

Always completely secure the battery compartment. If the battery compartment does not close securely, stop using the product, remove the batteries, and keep them away from children.

- ▶ **Do not damage the button/coin cell and or take the button/coin cell apart.** The button/coin cell may leak, explode, catch fire and cause personal injury.
- ▶ **Do not allow damaged button/coin cells to come into contact with water.** Leaking lithium may mix with water to create hydrogen, which could cause a fire, an explosion, or personal injury.

NOTICE: This device complies with part 15 of the FCC Rules. Operation is subject to the following two conditions:

1. This device must not cause harmful interference, and
2. this device must accept any interference received, including interference that may cause undesired operation.

NOTICE: Changes or modifications made to this equipment not expressly approved by the Robert Bosch GmbH may void the FCC authorization to operate this equipment.

NOTE: This equipment has been tested and found to comply with the limits for a Class B digital device, pursuant to Part 15 of the FCC Rules. These limits are designed to provide reasonable protection against harmful interference in a residential installation. This equipment generates, uses and can radiate radio frequency energy and, if not installed and used in accordance with the instructions, may cause harmful interference to radio communications. However, there is no guarantee that interference will not occur in a particular installation. If this equipment does cause harmful interference to radio or television reception, which can be determined by turning the equipment off and on, the user is encouraged to try to correct the interference by one or more of the following measures:

- – Reorient or relocate the receiving antenna.
- – Increase the separation between the equipment and receiver.
- – Connect the equipment into an outlet on a circuit different from that to which the receiver is connected.
- – Consult the dealer or an experienced radio/TV technician for help.

Radiofrequency radiation exposure Information: The radiated output power of the device is far below the FCC radio frequency exposure limits. Nevertheless, the device shall be used in such a manner that the potential for human contact during normal operation is minimized.

This equipment complies with FCC radiation exposure limits set forth for an uncontrolled environment into portable exposure conditions without distance restrictions. This transmitter must not be co-located or operating in conjunction with any other antenna or transmitter.

ISED Notice (Canada)

This device contains licence-exempt transmitter(s)/ receiver(s) that comply with Innovation, Science and Economic Development Canada's licence-exempt RSS(s). Operation is subject to the following two conditions:

1. this device may not cause interference, and
2. this device must accept any interference, including interference that may cause undesired operation of the device.

This equipment complies with Canada radiation exposure limits set forth for an uncontrolled environment into portable exposure conditions without distance restrictions. This transmitter must not be co-located or operating in conjunction with any other antenna or transmitter.

Privacy notice

When connecting the eBike to the **Bosch DiagnosticTool 3** or when exchanging eBike components, technical information about your eBike (e.g. bicycle manufacturer, model, bike ID, configuration data) as well as regarding the use of the eBike (e.g. total travel time, energy consumption, temperature) is transmitted to Bosch eBike Systems (Robert Bosch GmbH) for processing your request, in service cases and for the purposes of product improvement. You can find further information about data processing at www.bosch-ebike.com/privacy-full.

Product description and specifications

Product Features

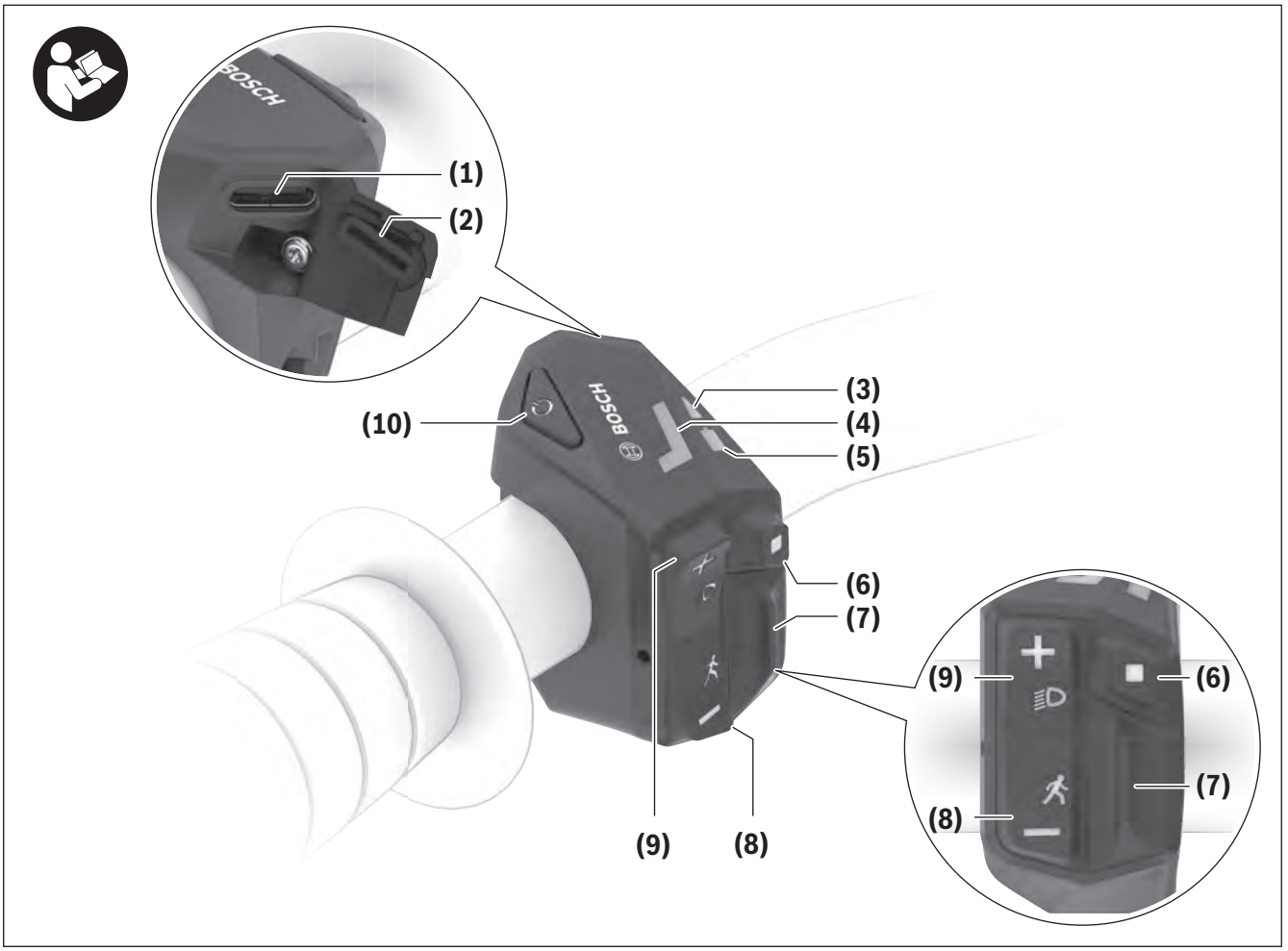

All illustrations of bike parts except for the drive unit, display (including control unit), speed sensor, and the corresponding holders are a schematic representation and may differ on your eBike.

(1) Charging connection
(2) Protective cap for charging connection
(3) ABS LED (optional)/ambient light sensor
(4) Riding mode LED
(5) Battery charge indicator of the eBike battery
(6) Select button
(7) Button for scrolling on to the right/scrolling back to the left
(8) Button for reducing the assistance level **–**/ walk assistance/hill-start assist
(9) Button for increasing the assistance level **+**/ bicycle lights
(10) ON/OFF button

Intended use

The **LED Controller** control unit is designed for controlling an eBike/display from the system generation **the smart system**.

You can also use it to control the **eBike Flow** app.

In order to be able to use the control unit to its fullest extent, a compatible smartphone with the **eBike Flow** app is required.

You can connect the **LED Controller** control unit with your smartphone via *Bluetooth*®.

Depending on the operating system of the smartphone, the **eBike Flow** app can be downloaded free of charge from the Apple App Store or Google Play Store.

Scan the code with your smartphone to download the **eBike Flow** app.

Technical Data

Control unit		LED Controller
Product code		BRC3610
Max. charging current of USB port[A)]	mA	600
USB port charging voltage[A)]	V	5
USB charging cable[B)]		USB Type-C®[C)]
Charging temperature	°F °C	+32 to +104 0 to +40
Operating temperature	°F °C	+23 to +104 −5 to +40
Storage temperature	°F °C	+50 to +104 +10 to +40
Charging connection		USB Type-C®[C)]
Internal lithium-ion battery (1× ICR1254)	V mAh	3.85 83
Protection rating[D)]		IP55
Dimensions	in mm	1.1 × 2.05 × 1.7 27 × 52 × 42
Weight	lbs g	0.06 28
Bluetooth® Low Energy 5.0		
– Frequency	MHz	2400–2480
– Transmission power	mW	1

A) Information about charging the **LED Controller** control unit

B) Not included with the product as standard

C) USB Type-C® and USB-C® are trademarks of USB Implementers Forum.

D) only applies when the protective cap of the charging port is closed

The license information for the product is available at the following Internet address: www.bosch-ebike.com/licences

Operation

Requirements

The eBike can then only be switched on when the following requirements are met:
- A sufficiently charged eBike battery is inserted (see operating instructions for the eBike battery from the system generation **the smart system**).
- The speed sensor, if provided, is connected properly (see operating instructions for the drive unit from the system generation **the smart system**).

Note: Improvements and added functionality are regularly introduced through software updates. Therefore, the displays and functions shown here may differ from what is actually displayed.

Control unit power supply

If a sufficiently charged eBike battery is inserted into the eBike and the eBike is switched on, the internal battery of the control unit is powered and charged.

If the state of charge of the internal battery of the control unit is very low and the eBike cannot be switched on after a long period of inactivity, you can charge the internal battery of the control unit via the charging connection **(1)** with a USB Type-C® cable using a power bank or another suitable power source (charging voltage **5 V**; charging current max. **600 mA**).

The control unit's internal battery is charged via an external supply that meets the ES1 and PS2 limit values in accordance with IEC 62368-1.

Always close the protective cap **(2)** on the charging connection **(1)** so that no dust or moisture can enter.

Charging External End Devices

The charging port **(1)** is also designed for charging compatible end devices.

Note: Please note that, depending on how the eBike components are assembled, charging may not be possible or only to a limited extent.

To do this, switch on the eBike, open the protective cap **(2)** of the charging port **(1)** and connect the end device.

- ▸ **The USB Type-C® cable can get caught in the front wheel while riding. This can lead to accidents with unforeseeable consequences.** Before traveling, make sure that all cables are packed away neatly.

When charging, observe the following instructions:
- Only charge in dry conditions.
- Only charge one end device at a time.
- Check that the charging connection is clean before connecting it.
- Make sure that the end device is compatible with the specified values (current and voltage).
- Depending on the charging power, having end devices connected may impact the range.
- Always close the protective cap **(2)** on the charging connection **(1)** when you are not using it to charge external end devices so that no dust or moisture can enter.

Switching the eBike on/off

To **switch on** the eBike, briefly press the ON/OFF button **(10)** on the **LED Controller** control unit. After the starting animation, the state of charge of the eBike battery is displayed in color with the battery charge indicator **(5)** and the set riding mode with the **(4)** display. The eBike is ready to ride.

The display brightness is controlled by the ambient light sensor **(3)**. Therefore, do not cover the ambient light sensor **(3)**.

The drive is activated as soon as you start pedaling (except in the **OFF** riding mode). The drive power varies depending on the riding mode set.

As soon as you stop in normal operation, press the pedals, or as soon as you have reached a speed of **20/28 mph (32/45 km/h)**, the assistance will be switched off by the drive. The drive is automatically reactivated as soon as you press the pedals and the speed is below **20/28 mph (32/45 km/h)**.

To **switch off** the eBike, briefly press the on/off button **(10)** (< 3 s). The battery charge indicator of

the eBike battery **(5)** and the riding mode LED **(4)** go out.

If no power is requested from the drive for approx. **10** minutes (e.g. due to the eBike being stationary) and no button is pressed, the eBike switches off automatically.

Note: If the **eBike Flow** app is open in the foreground, the eBike will not switch off automatically.

Battery charge indicator of the eBike battery

The eBike battery's state of charge is indicated by different colors on the battery charge indicator **(5)**. If the battery charge indicator **(5)** changes color while riding, this is indicated by brief flashing.

Battery charge indicator	Capacity
Green	100 % to 51 %
Yellow	50 % to 31 %
Orange	30 % to 11 %
Red	10 % to 1 %
Flashing red	Reserve or empty

If the eBike battery is being charged, the battery charge indicator of the eBike battery **(5)** flashes.

Outside of the eBike, the eBike battery's state of charge can be seen from the LEDs on the eBike battery itself.

Selecting the Riding Mode

You can set how much the eBike drive assists you while pedaling on the control unit using the reduce assistance level **– (8)** and increase assistance level **+ (9)** buttons. The riding mode can be changed even while cycling, and is displayed in color.

Additional riding modes can be activated via the **eBike Flow** app or at your service center if this is provided by the bicycle manufacturer.

Note: The riding modes available depend on the respective drive unit. The intensity and duration of the assistance vary depending on the riding mode.

Riding mode	Notes
OFF	Drive assistance is switched off. The eBike can just be moved by pedaling, as with a normal bicycle.
ECO	Effective assistance with maximum efficiency, for maximum range
ECO+	Range-optimized riding mode that only switches on the drive assistance above a certain rider performance; for natural cycling and for a maximum range
TOUR	Steady assistance, long range for touring
TOUR+	Dynamic assistance for natural, sporty cycling
eMTB[A)]	Optimal assistance whatever the terrain, rapid acceleration when starting from a standstill, improved dynamics and top performance including "Extended Boost"
eMTB+[A)]	Dynamic support to the maximum – at the perfect level and with up to 100 % more "Extended Boost" – for even more fun on trails
SPORT	Powerful assistance, for mountain biking and for cycling in urban traffic
TURBO	Maximum assistance even at a high cadence, for biking sports
AUTO	The assistance adapts dynamically to the riding situation.
RACE[A)]	Maximum assistance on the eMTB racetrack; very quick response and maximum "Extended Boost" for the best possible performance in competitive situations
CARGO	Steady, powerful assistance for safely transporting heavy weights
SPRINT	Dynamic assistance according to cadence – for athletic eGravel and eRoad cycling with rapid sprints and frequent ascents

A) The "Extended Boost" provides a controlled pushing force over a short distance once pedaling is stopped.

Adjusting the Riding Mode

The riding modes can be adapted within certain limits using the **eBike Flow** app. This gives you the option of adjusting your eBike to your personal requirements.

It is not possible to create a completely new riding mode. You can only adjust the riding modes that have been enabled by the bicycle manufacturer on your system.

In addition, restrictions in your country may mean that it is not possible to adjust a particular riding mode.

The following parameters are available for making adjustments:

- Assistance in relation to the base value of the riding mode (within the legal requirements)
- Drive response
- Top limit speed (within the legal requirements)
- Maximum torque (within the limits of the drive)

Note: Please ensure that your modified riding mode retains the position, name and color on all displays and controls.

Interaction of the drive unit with the gear-shifting

You should shift through gears on an eBike in the same manner as when using a normal bicycle (observe the operating instructions of your eBike with regard to this point).

Irrespective of the type of gear shifting, it is advisable that you briefly reduce the pressure on the pedals when changing gear. This will aid gear shifting and reduce wear on the powertrain.

By selecting the correct gear, you can increase your speed and range while applying the same amount of force.

For this reason, follow the gear change recommendations shown on your display.

Switching bike lights on/off

Before starting each journey, check that your bike lights are working correctly.

To **switch on** the bicycle lights, press the bicycle lights button **(9)** for more than 1 s.

Switching the walk assistance on/off

The walk assistance can make it easier for you to push the eBike. The maximum speed of the walk assistance is **2.5 mph (4 km/h)**. The bicycle manufacturer can adjust the default so that it is lower and, if necessary, it can also be adjusted by a service center.

- ▶ **The walk assistance function must only be used when pushing the eBike.** There is a risk of injury if the wheels of the eBike are not in contact with the ground while using the walk assistance.
- ▶ **If the selected gear is too high, the drive unit may not be able to move the eBike or activate the roll-away lock.**

Note: The walk assistance function is deactivated in the **OFF** riding mode.

To **activate** walk assistance, press and hold the walk assistance button **(8)** for more than 1 s. The eBike's battery charge indicator **(5)** goes out and the riding mode LED **(4)** flashes in the color of the set riding mode.

After activation, the drive begins to push.

If you release the walk assistance button **(8)**, walk assistance stops. You can reactivate walk assistance straight away by pressing the walk assistance **(8)** button within 10 s.

If you do not reactivate walk assistance within 10 s, walk assistance automatically switches off.

Walk assistance is always ended if

- The rear wheel jams,
- The bicycle cannot move over ridges,
- A body part is blocking the bike crank,
- An obstacle continues to turn the crank,
- You start pedaling,
- The increase assistance level **+**/bicycle lights **(9)** button or ON/OFF button **(10)** is pressed.

Walk assistance has a roll-away lock, i.e. even after walk assistance has been used, rolling backwards is actively curbed by the drive for a few seconds, and

you cannot push the eBike backwards or can only do so with difficulty.

The roll-away lock is immediately deactivated by pressing the increase assistance level **+**/bicycle lights **(9)** button.

The walk assistance function is subject to local regulations; the way it works may therefore differ from the description above. It can also be deactivated.

Switching Hill-Start Assist On and Off

Hill-start assist makes it easier to start riding on hills.

To **activate** hill-start assist, place your foot on the pedal so that your eBike detects that you would like to start riding. Then press the hill-start assist button **(8)** for more than 1 s.

Note: Follow the order for actions when activating the hill-start assist button. The walk assistance will activate if you first press the hill-start assist button **(8)** and then place your foot on the pedal.

Once you have successfully activated hill-start assist, let go of the hill-start assist button **(8)** again. Once you have safely started riding, the hill-start assist will deactivate automatically and you will continue riding in the set riding mode. You can end hill-start assist at any time by taking your foot off the pedal.

You can then reactivate hill-start assist within 10 s by placing your foot back on the pedal. This will be shown on your display. It is not necessary to press the hill-start assist button **(8)** again. If you press the hill-start assist button **(8)** within 10 s, the countdown will be reset once and you will again have 10 s to activate hill-start assist.

Hill-start assist has a roll-away lock, i.e. even after hill-start assist has been used, rolling backwards is actively curbed by the drive for a few seconds, and this prevents the eBike from rolling backwards unintentionally.

The hill-start assist function is subject to local regulations; the way it works may therefore differ from the description above, or the function may even be deactivated completely.

ABS – Anti-lock braking system (optional)

If the eBike is equipped with a Bosch eBike ABS from **the smart system** generation of systems, the ABS LED **(3)** lights up when the eBike is started.

After moving off, the ABS internally checks its functionality and the ABS LED goes off.

In the event of a fault, the ABS LED **(3)** lights up, together with the orange flashing riding mode LED **(4)**. You can acknowledge the error with the select button **(6)** and the flashing riding mode LED **(4)** will go out. While the ABS LED **(3)** is lit up, the ABS is not in operation.

For details on the ABS and how it works, including how it acts during a trick, please refer to the ABS operating instructions.

Establishing a smartphone connection

In order to be able to use the following eBike functions, a smartphone with the **eBike Flow** app is required.

Connection to the app occurs via a *Bluetooth*® connection.

Switch on the eBike and wait for the start animation to finish. Do not ride the eBike.

Start *Bluetooth*® pairing by pressing and holding (> 3 s) the ON/OFF button **(10)**. Release the ON/OFF button **(10)** as soon as the eBike's battery charge indicator **(5)** flashes blue to indicate the pairing process is underway.

Confirm the connection request in the app.

Software updates

Software updates must be manually started in the **eBike Flow** app.

Software updates are transferred to the control unit in the background of the app as soon as it is connected to the app. During the update process, progress is indicated by the riding mode LED **(4)** flashing green. The eBike is then restarted.

You can control the software updates via the **eBike Flow** app.

Activity tracking and digital eBike garage

In order to record activities, it is necessary to register and log into the **eBike Flow** app.

To record activities, you must consent to the storage of your location data in the app. Without this, your activities cannot be recorded in the app. For location data to be recorded, you must be logged in to a user account.

You can add a total of six eBikes to one user account in the **eBike Flow** app.

eBike Lock

The **<eBike Lock>** can be set up for any eBike via the **eBike Flow** app under **<Settings>** → **<Lock & Alarm>**. In the process, a key for unlocking the eBike is saved on the smartphone and/or the **Kiox 300/ Kiox 500** display.

The **<eBike Lock>** is automatically enabled in the following cases:

– The eBike is switched off via the control unit
– The eBike is switched off automatically

If the eBike is switched on and the smartphone is connected to the eBike via *Bluetooth*®, or the pre-set display is fitted in the holder, the eBike will be unlocked.

<eBike Lock> is linked to your **user account**.

If you lose your smartphone, you can log in to your user account on the **eBike Flow** app using another smartphone and then unlock the eBike.

If the display is lost, you can reset all the digital keys in the **<Lock & Alarm>** menu item in the **eBike Flow** app.

Caution! If you select a setting in the app that could have negative consequences in combination with the **<eBike Lock>** (e.g. deleting your eBike or user account), you will be shown warning messages beforehand. **Please read through these thoroughly and adhere to the warnings that are issued (e.g. before deleting your eBike or user account).**

Setting up <eBike Lock>

In order to be able to set up the **<eBike Lock>**, the following conditions must be fulfilled:

– The **eBike Flow** app has been installed.
– A user account has been created.
– The eBike is not currently updating.
– The eBike is connected to the smartphone via *Bluetooth*®.
– The eBike is stationary.
– The smartphone is connected to the Internet.
– The eBike battery is sufficiently charged and the charging cable is not connected.

You can set up **<eBike Lock>** in the **eBike Flow** app under the **<Lock & Alarm>** menu item.

The drive unit of your eBike only provides support if the smartphone is connected to the eBike via *Bluetooth*® or the display is placed in the holder when the eBike is switched on. If the smartphone is used as a key, your smartphone must have *Bluetooth*® switched on, and the **eBike Flow** app must be active in the background. When the **<eBike Lock>** is activated, you can continue to use your eBike without assistance from the drive unit.

Compatibility

The **<eBike Lock>** is compatible with all Bosch drive units from the system generation **the smart system**.

How it works

In combination with the **<eBike Lock>**, the smartphone and the display work like a key for the drive unit. The **<eBike Lock>** is activated by switching off the eBike. When switching on, the eBike checks if any pre-set key is available. A white LED flashes on the **LED Controller** control unit, and a lock symbol is shown on the display.

Note: The **<eBike Lock>** alone does not provide adequate theft protection; it is simply a supplement to a

mechanical lock. The **<eBike Lock>** does not provide any form of mechanical lock for the eBike. Only the assistance from the drive unit is deactivated. The drive unit will be unlocked for as long as the smartphone is connected to the eBike via *Bluetooth*® or the display is placed in the holder.

If you want to give third parties temporary or permanent access to your eBike, share one of the preset digital keys (display/smartphone). As a result, the <eBike Lock> is still active. If you want to take your eBike to a service, the <eBike Lock> can be deactivated in the eBike Flow app in the <Settings> menu item. If you wish to sell your eBike, you will also need to delete the eBike from your user account in the **eBike Flow** app in the **<Settings>** menu item.

When the eBike is switched off, the drive unit will emit a "Lock" sound (i.e. an audio signal that is played **once**) to indicate that the assistance from the drive unit is switched off.

When the eBike is switched on, the drive unit will emit two "Unlock" sounds (i.e. an audio signal that is played **twice**) to indicate that the assistance from the drive unit is enabled again.

The "Lock" sound will help you determine whether or not the **<eBike Lock>** on your eBike is active. The audio signal is activated by default, but it can be deactivated in the **eBike Flow** app in the **<Locking sound>** menu item by selecting the lock symbol under your eBike.

Note: If you can no longer set up or switch off the **<eBike Lock>**, please contact your service center.

Replacing the Smartphone

1. Install the **eBike Flow** app on the new smartphone.
2. Log in with **the same** user account that was used to activate the **<eBike Lock>**.
3. The **<eBike Lock>** is displayed as set up in the **eBike Flow** app.

Flow+ subscription functions

For the following functions, a **Flow+ subscription** is required. Fees may be payable for this.

Information about **Flow+ subscription** and details on individual services can be found in the **eBike Flow** app or in the Bosch eBike Help Center on the website www.bosch-ebike.com/help-center.

Battery Lock

The **<Battery Lock>** can be set up for any eBike via the **eBike Flow** app under **<Settings>** → **<Lock & Alarm>**.

In addition to the drive unit, the eBike battery can be locked when the eBike is switched off using **<Battery Lock>**. The eBike battery will only be unlocked again when the pre-set key (smartphone and/or **Kiox 300/ Kiox 500** display) is present when the eBike is switched on.

Share eBike

With the **eBike Flow** app, you can share your eBike and its digital functions with up to 5 other people. You remain in control of the settings, functions and updates. The people you choose to share with can only use the digital functions preselected by you. In order for you to be able to share the eBike, “share eBike” must be registered to you in the **eBike Flow** app and you must hold an active **Flow+ subscription**. The eBike software must be up to date. Under **<Settings>** in the **eBike Flow** app, you can create an invitation link and send this to the people you want to share with. Once they have accepted the invitation, they can connect the shared eBike with their own **eBike Flow** app user account.

More information about this can be found in the **eBike Flow** app or in the Bosch eBike Help Center on the website www.bosch-ebike.com/help-center.

Troubleshooting

The control unit shows whether critical errors or less critical errors occur on the eBike.

The error messages generated by the eBike can be read via the **eBike Flow** app or by your service center.

Via a link in the **eBike Flow** app, information about the error and support for rectifying the error can be displayed.

Less critical errors

Less critical errors are indicated by the LEDs **(4)** and **(5)** flashing orange before changing to a continuous orange light. Pressing the select button **(6)** confirms the error and the LEDs **(4)** and **(5)** return to continuously displaying the color of the set riding mode.

You can use the following table to rectify the errors yourself if necessary. Otherwise, please contact your service center.

Number	Troubleshooting
503009	Check your display, the cabling and any power consumers connected to the display. If the problem persists, please get in touch with your service center.
523003	Check that the rim magnet is firmly attached to the valve. Then restart your eBike and check the display after a short ride. If the problem persists, please get in touch with your service center.
523006	Check the rim magnet and spoke magnet, if present. Then, restart your eBike. If the problem persists, please get in touch with your service center.
853201	
523005	The indicated error numbers show that the sensors are struggling to detect the magnetic field. See whether you have lost the magnet while riding. If you are using a magnet sensor, check that the sensor and magnet have been properly installed. Also make sure that the cable to the sensor is not damaged. If you are using a rim magnet, make sure that you do not have any magnetic field interference in the vicinity of the drive unit.
514001	
514002	
514003	
514006	
650001	Check that the eBike battery is sitting correctly. Check the electrical contacts on the eBike battery and the eBike battery holder for signs of corrosion. If necessary, clean the contacts using a soft, damp cloth and leave to dry. Run an eBike update, if available, via the **eBike Flow** app. Restart your eBike. If the problem persists, please get in touch with your service center.
660001	Restart your eBike. If the problem persists, do not charge your eBike battery and do not continue to use it. Please contact a service center.
660002	Do not remove the eBike battery from the eBike. Connect the eBike battery to a charger and wait at least 10 s. Re-insert the eBike battery into the eBike. Restart your eBike.

Number	Troubleshooting
670001	Disconnect the charger from your eBike and from the mains power supply and wait at least 5 s. Then reconnect the charger to restart the charging process. **Notes:** – Do not connect the charger's mains cable to the mains power supply while your eBike or the eBike battery are still starting up/shutting down. – Do not press the on/off button on the eBike battery while the mains cable of the charger is being connected or is already connected to the mains power supply. – Do not insert and remove the charger plug in quick succession. If the problem persists: – Use another charger in order to rule out charger errors. – Run an eBike update, if available, via the **eBike Flow** app. If the problem occurs while charging on the go: – Check whether the mains power supply meets the input parameters on the charger's type plate. – If the problem persists, please get in touch with your service center.
680007 **680009** **680012** **680014** **680016** **680017**	The indicated error numbers show that the eBike battery is outside of the permissible operating temperature. The charging of the eBike battery is interrupted. As soon as the operating temperature returns to the permissible range, the charging process will start again.
903002 **903005**	Try to ride your eBike to a different location for better signal. If the problem persists, please get in touch with your service center.
112000	Log back in to the **eBike Flow** app and connect your smartphone. If the problem persists: – Reinstall the app and then start your eBike. – Then connect your smartphone with your eBike. If the problem persists: – Please contact your service center.
1B7213 **1B7613** **1B7713** **1C7413** **1C7513** **1C7713** **5F0200**	Run a software update in the **eBike Flow** app. Restart your eBike. If the problem persists, please get in touch with your service center.

Number	Troubleshooting
F10005	To rectify the software incompatibility, all eBike components must have the latest software. – Connect all components belonging to the eBike, including the removable and optional components. – Run a software update with the **eBike Flow** app or ask a service center to do so. – Restart your eBike.

Critical errors

Critical errors are indicated by the LEDs **(4)** and **(5)** flashing red, followed by them lighting up continuously. If a critical error occurs, follow the instructions in the table below.

Number	Instructions
6A0000	Connect all components belonging to the eBike, including the removable and optional components. Run a software update. Restart your eBike. If the problem persists, please get in touch with your service center.
F10004	Connect all components belonging to the eBike, including the removable and optional components. Run a software update. All components require the latest software version. Restart your eBike. If the problem persists, please get in touch with your service center.
890000	– Acknowledge the error code. – Restart the eBike. If the problem persists: – Acknowledge the error code. – Run the software update. – Restart the eBike. If the problem persists: – Please contact a service center.

Maintenance and Service

Maintenance/cleaning

⚠ WARNING

- ▶ **Do not open any of the components. Service should only be carried out at an authorized Bosch eBike dealer.** Failure to follow above warning can cause death or serious injury. Refer to your bicycle manual or component manual for all non-Bosch drive system components.
- ▶ **Do not submerge your eBike components in water, or wash with pressurized hose.** Your Bosch drive unit is designed to be water tight to rain water or non-pressure hose washing.
- ▶ **Do not paint any components of the Bosch drive system as they may cause premature failure of the component.**

The control unit must not be cleaned with pressurized water.

Keep the control unit clean. Dirt can cause faulty brightness detection.

Clean your control unit using a soft cloth dampened only with water. Do not use cleaning products of any kind.

- ▶ **This product uses a battery that can be replaced, though the coin cell inside this battery is not user replaceable.**
- ▶ **Please make sure you have all repairs carried out by a service center.**

Note: If you are handing in your eBike to a service center for maintenance, it is recommended that you deactivate **<Lock & Alarm>**.

Note: If you do not use the **LED Controller** control unit for a long time, charge it in accordance with (see "Control unit power supply", page English – 10).

After-sales service and advice on using products

If you have any questions about the eBike and its components, contact a service center.

For contact details of service centers, please visit www.bosch-ebike.com.

More information

More information and videos about the eBike components and their functions can be found in the Bosch eBike Help Center.

Recycling Program

The individual eBike components as well as accessories and packaging should be recycled in an environmentally friendly manner.

Do not dispose of eBikes and their components with household waste.

You may recycle your Bosch battery pack by calling 1.800.822.8837.

Robert Bosch GmbH
72757 Reutlingen
Germany

www.bosch-ebike.com

kontakt@bosch.de

0 275 U07 3LC (2026.02) T / 64

Display Mount

BDS3210 | BDS3250 | BDS3620 | BDS3630



en Original operating instructions

This manual contains important safety, performance and service information. Read and understand it along with the information provided to you by your bicycle manufacturer before using the product, and keep it for reference.

Table of contents

Introduction 2
About Warnings 2
General Warnings 2
Using your Manual 3
Operating your Bosch Display Holder 4
Safety instructions 4
Product description and specifications 5
Fitting 6
Maintenance and servicing 8
Maintenance and cleaning 8
After-sales service and advice on using products 8
More information 8
Disposal 8

Introduction

About Warnings

This manual contains many **DANGER**, **WARNING**, and **CAUTION** indicators concerning the consequences of failure to use, assemble, maintain, store, inspect and dispose of a Bosch-equipped eBike in a safe manner.

– The combination of the safety alert symbol and the word **DANGER** indicates a hazardous situation that, if not avoided, will result in death or serious injury.
– The combination of the safety alert symbol and the word **WARNING** indicates a hazardous situation that, if not avoided, could result in death or serious injury.
– The combination of the safety alert symbol and the word **CAUTION** indicates a hazardous situation that, if not avoided, could result in minor or moderate injury.

General Warnings



Read all safety warnings and all instructions. Failure to follow the warnings and instructions may result in death or serious injury.

Save all safety warnings and instructions for future reference.

The term **eBike battery** used in these operating instructions refers to all original Bosch eBike batteries from the system generation **the smart system**.

▶ **Read ALL accompanying manuals before riding the bike for the first time.** Your Bosch Drive System comes with additional manuals and documents provided by the manufacturer of the bicycle and other components. Failure to read and understand safety information can result in death or serious injury.

⚠ WARNING

▶ **This manual contains important safety, performance and service information.** Read it before you take the first ride on your new bicycle, and keep it for reference. The manual can also be found online at www.bosch-ebike.com.

▶ **This manual is intended to be read together with the separate user manual provided with your bicycle.** Be sure to read all provided documents including labels on the product before your first ride.

▶ **Take responsibility for your own SAFETY.** If you have any questions or do not understand something, consult with your dealer or the bicycle or component manufacturer.

▶ **Some eBike accessories may present a choking hazard to small children.** Keep these accessories away from children.

⚠ CAUTION

▶ **The Bosch Drive System adds weight to your bicycle which you may not be used to lift.** Avoid injury, use proper lifting techniques.

Using your Manual

In addition to the functions outlined here, changes to software relating to troubleshooting and functional modifications may be introduced at any time.

Graphics

The bicycle shown in this manual may differ slightly from your bicycle, but will be similar enough to help you understand our instructions.

RIGHT-HAND and LEFT-HAND sides are determined by facing in the direction the bicycle will travel when going forward. When you see a broken line (------), the item referred to is hidden from view.

Operating your Bosch Display Holder

Safety instructions



Read all the safety information and instructions. Failure to observe the safety information and follow instructions may result in electric shock, fire and/or serious injury.

Save all safety warnings and instructions for future reference.

- ▸ **Read and observe the safety warnings and instructions in all operating instructions of the eBike components and your eBike.**
- ▸ **The contact surfaces of the Display Mount can get very hot (> 140 °F [> 60 °C]). Allow the contact surfaces to reach the correct temperature before you touch them.** This is particularly important when using a **SmartphoneGrip/ SmartphoneGrip Vertical**.
- ▸ **Keep swallowable small parts away from small children.** There is a risk of serious injury.
- ▸ **Never short-circuit the pins.** The display holder may be irreparably damaged and must then be replaced.
- ▸ **Ensure that the contacts are free of dirt.** By doing this, you prevent malfunctions or damage.
- ▸ **After a fall, check the display holder for sharp edges.** Replace it if required.
- ▸ **Do not stand your eBike upside down on its saddle and handlebars if the display or its holder protrude from the handlebars.** This may irreparably damage the display or the holder. Also remove the display before placing the eBike on a wall mount to ensure that the display does not fall off or become damaged.
- ▸ **Observe all national regulations which set out the approved use of eBikes.**

Product description and specifications

Product Features

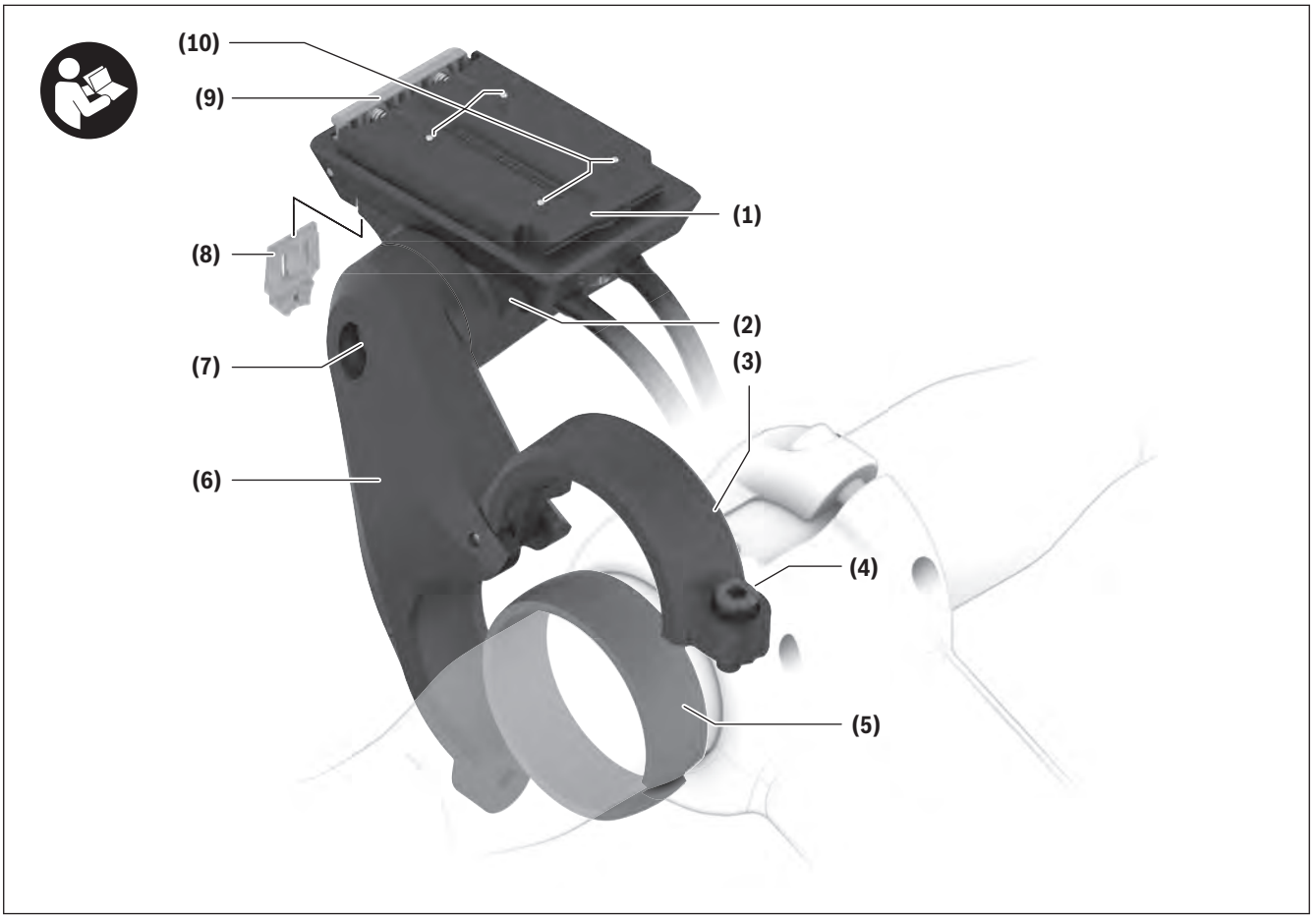

(1) Display mount
(2) Adapter tray
(3) Clamp for holder
(4) Clamp screw
(5) Round rubber spacer
(6) 1-arm socket
(7) Screw for adjusting tilt
(8) Removal blocker
(9) Snap-in hook
(10) Display Mount contacts
(11) Connection cables
(12) Fastening screws for display mount

The display mount **(1)** can also be embedded in the bicycle design.

Intended use

The display holder is intended to establish the mechanical and electrical connection to a display.

Only original Bosch eBike components from the system generation **the smart system** can be connected to the display holder.

A display holder is not required for an eBike to function.

Technical data

Display holder		Display Mount
Product code		BDS3210 BDS3250 BDS3620 BDS3630
Output voltage	V	4.75–5.4
Output current, max.	A	1.5
Operating temperature	°F °C	+23 ... +104 –5 ... +40
Storage temperature	°F °C	+50 ... +104 +10 ... +40
Protection rating		IP55

Fitting

Note: Do not use a ball end hex key.

Installation positions

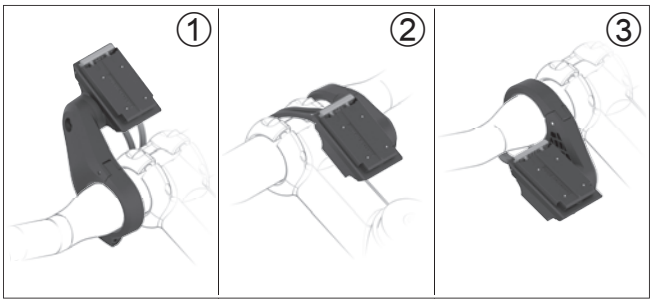

The 1-arm socket can be mounted at three different positions on the handlebars:

– In front of the handlebars ①
– Over the stem ②
– In the triangle between the stem and handlebar ③

Note: In order to ensure clean cable routing, the appropriate display mount must be used for each of the three different positions: The BDS3210 display mount for in front of the handlebars (electrical connections at the rear); the BDS3250 display mount for over the stem or in the triangle between the stem and handlebar (electrical connections at the front).

If you want to change the installation position and you have the correct display mount **(1)**, you must first remove the 1-arm socket **(6)** and re-mount it afterwards.

Note: There are two different handlebar diameters (approx. 1.25 in and 1.38 in [31.8 mm and 35 mm]). Your specialist retailer will help you to select the correct components.

Mounting the display mount

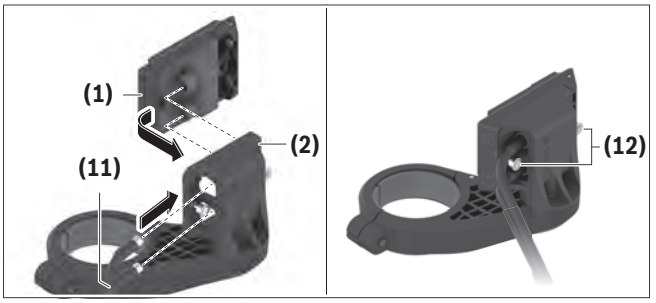

(1) Display mount
(2) Adapter tray
(11) Connection cables
(12) Fastening screws for display mount

Insert the display mount **(1)** into the adapter tray **(2)**. Ensure that it is in the chosen installation position. Secure the display mount **(1)** from below using the screws **(12)**. In doing so, take care not to exceed to

the maximum torque specified on the adapter tray **(2)** (approx. 0.7 lb ft [1 Nm]).

Connect the connection cables **(11)** that come out of the drive unit and the control unit. It does not matter which cable is connected to which connection for the functions to work. When connecting the cables, ensure that the markings on the connector and on the cable match.

Securing on the handlebars

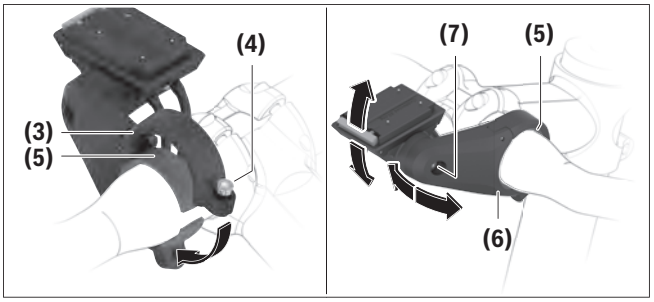

(3) Clamp for holder

(4) Clamp screw

(5) Round rubber spacer

(6) 1-arm socket

(7) Screw for adjusting tilt

Note: The display holder must only be secured in the cylindrical area of the handlebars and not in the tapered area. To align the display in the center, the handlebars must have a cylindrical area of at least approx. 3.54 in (90 mm) in width.

Open the clamp and bring the 1-arm socket **(6)**, together with the round rubber spacer **(5)**, into the required position. Gently tighten the clamp screw **(4)** so that the 1-arm socket **(6)** can still move.

Adjust the tilt for the display mount by loosening and tightening the screw **(7)**. Ideally, the inclination should be adjusted without the display.

In the connection between the 1-arm socket **(6)** and the adapter tray, there are interlocking teeth, which means that it is only possible to align the adapter tray in predefined positions. Before tightening the screw **(7)**, make sure that the teeth engage in one another correctly. In addition, take care not to exceed the maximum torque specified on the 1-arm socket **(6)** (approx. 1.1 lb ft [1.5 Nm]).

Thanks to the round rubber spacer **(5)**, it is possible to move the 1-arm socket **(6)** in all directions.

Bring the 1-arm socket **(6)** into its final position and tighten the clamp screw **(4)**. Here too, take care not to exceed the maximum torque specified on the 1-arm socket **(6)** (approx. 1.1 lb ft [1.5 Nm]).

Removal blocker

A device attached to the display holder can be secured using the removal blocker **(8)**. Usage is described in the operating instructions for the respective device.

Maintenance and servicing

Maintenance and cleaning

The display holder must not be cleaned with pressurized water.

Use a soft cloth dampened only with water for cleaning. Do not use cleaning products of any kind.

▶ **Please make sure you have all repairs carried out by a service center.**

After-sales service and advice on using products

If you have any questions about the eBike and its components, contact a service center.

For contact details of service centers, please visit www.bosch-ebike.com.

More information

More information and videos about the eBike components and their functions can be found in the Bosch eBike Help Center.

Disposal

Please return Bosch eBike components that are no longer usable, free of charge, to a specialist dealer or a recycling center.

Do not dispose of eBikes and their components with household waste.

Robert Bosch GmbH
72757 Reutlingen
Germany

www.bosch-ebike.com

kontakt@bosch.de

0 275 U07 3S1 (2026.02) T / 26

SmartphoneGrip

BSP3200



en Original operating instructions

This manual contains important safety, performance and service information. Read and understand it along with the information provided to you by your bicycle manufacturer before using the product, and keep it for reference.

Table of Contents

Introduction 2
About Warnings 2
General Warnings 2
Using your Manual 3
Operating your Bosch Drive System 4
Safety Instructions 4
Product description and specifications 7
Assembly 9
Operation 11
Maintenance and servicing 12
Maintenance and cleaning 12
After-sales service and advice on using products 12
More information 12
Transport 12
Recycling Program 12

Introduction

About Warnings

This manual contains many **DANGER**, **WARNING**, and **CAUTION** indicators concerning the consequences of failure to use, assemble, maintain, store, inspect and dispose of a Bosch-equipped eBike in a safe manner.

– The combination of the safety alert symbol and the word **DANGER** indicates a hazardous situation that, if not avoided, will result in death or serious injury.
– The combination of the safety alert symbol and the word **WARNING** indicates a hazardous situation that, if not avoided, could result in death or serious injury.
– The combination of the safety alert symbol and the word **CAUTION** indicates a hazardous situation that, if not avoided, could result in minor or moderate injury.

General Warnings



Read all safety warnings and all instructions. Failure to follow the warnings and instructions may result in death or serious injury.

Save all safety warnings and instructions for future reference.

The term **eBike battery** used in these operating instructions refers to all original Bosch eBike batteries from the system generation **the smart system**.

▶ **Read ALL accompanying manuals before riding the bike for the first time.** Your Bosch Drive System comes with additional manuals and documents provided by the manufacturer of the bicycle and other components. Failure to read and understand safety information can result in death or serious injury.

⚠ WARNING

▶ **This manual contains important safety, performance and service information.** Read it before you take the first ride on your new bicycle, and keep it for reference. The manual can also be found online at www.bosch-ebike.com.

▶ **This manual is intended to be read together with the separate user manual provided with your bicycle.** Be sure to read all provided documents including labels on the product before your first ride.

▶ **Take responsibility for your own SAFETY.** If you have any questions or do not understand something, consult with your dealer or the bicycle or component manufacturer.

▶ **Some eBike accessories may present a choking hazard to small children.** Keep these accessories away from children.

⚠ CAUTION

▶ **The Bosch Drive System adds weight to your bicycle which you may not be used to lift.** Avoid injury, use proper lifting techniques.

Using your Manual

In addition to the functions outlined here, changes to software relating to troubleshooting and functional modifications may be introduced at any time.

Graphics

The bicycle shown in this manual may differ slightly from your bicycle, but will be similar enough to help you understand our instructions.

RIGHT-HAND and LEFT-HAND sides are determined by facing in the direction the bicycle will travel when going forward. When you see a broken line (------), the item referred to is hidden from view.

Operating your Bosch Drive System

Safety Instructions



Read all the safety information and instructions. Failure to observe the safety information and follow instructions may result in electric shock, fire and/or serious injury.

Save all safety warnings and instructions for future reference.

The term **eBike battery** used in these operating instructions refers to all original Bosch eBike batteries from the system generation **the smart system**.

The terms **drive** and **drive unit** used in these operating instructions refer to all original Bosch drive units from the system generation **the smart system**.

- ▸ **Read and observe the safety warnings and instructions in all operating instructions of the eBike components and your eBike.**
- ▸ **Do not allow your attention to be diverted from surrounding traffic when using Bosch eBike components, and always ride with both hands on the handlebars. Always observe the applicable legal provisions in your country for the permitted use of your eBike in road traffic. In particular, note that it is prohibited to pick up or hold your smartphone in your hand in road traffic.**
- ▸ **Set the smartphone brightness so that you can adequately see important information such as speed and warning symbols.** Incorrectly set brightness may lead to dangerous situations.
- ▸ **The contact surfaces of the Display Mount can get very hot (> 140 °F [> 60 °C]). Allow the contact surfaces to reach the correct temperature before you touch them.** This is particularly important when using a **SmartphoneGrip**.
- ▸ **Seek medical advice before using fitness apps.** Fitness apps may cause people to overexert themselves physically.
- ▸ **Always observe local restrictions for using electronic devices.**
- ▸ **Avoid using the device in close proximity to your body over an extended period of time.**
- ▸ **Do not stand your eBike upside down on its saddle and handlebars if the SmartphoneGrip or Display Mount protrude from the handlebars.** This may irreparably damage the **SmartphoneGrip** or Display Mount.
- ▸ **Do not use the SmartphoneGrip as a handle.** Lifting the eBike up by the **SmartphoneGrip** can cause irreparable damage to the **SmartphoneGrip** and Display Mount.
- ▸ **Do not open the SmartphoneGrip.** Opening the **SmartphoneGrip** can destroy it and void any warranty claims.
- ▸ **Caution!** When using the SmartphoneGrip with inductive charging technology, a fault may occur in other devices and systems, airplanes and medical devices (e.g. pacemakers, hearing aids). Likewise, injury to people and animals in the immediate vicinity cannot be excluded entirely. Do not use the SmartphoneGrip with inductive charging technology in the vicinity of medical devices, petrol stations, chemical plants, areas with a potentially explosive atmosphere or on blast sites. Do not use the SmartphoneGrip with inductive charging technology in airplanes. Avoid operation near your body for extended periods.
- ▸ **Do not enter information or make selections while riding.** Interacting with the display or control unit while riding can lead to accidents causing serious injury or death. You must observe road and traffic conditions, and comply with traffic laws at all times.
- ▸ **Using your mobile device while operating an eBike may be distracting. Distracted driving is a**

serious safety concern and can lead to accidents causing serious injury or death. In order to prevent distracted driving, most devices come equipped with a "Do Not Disturb" mode. The "Do Not Disturb" mode should be used while operating an eBike. Please consult your device-specific instructions for more information. You, as the eBike operator, are fully responsible for ensuring that you pay attention to road conditions and comply with traffic laws at all times.

- ▶ Please note that certain State or local laws may require that class III eBikes must be equipped with a functioning speedometer that displays speed in miles per hour. Riders must be aware of any and all applicable rules and regulations related to the operation or use of class III eBikes in any applicable jurisdictions before operating or otherwise using this product.
- ▶ **Choose the USB charging cable length appropriately.** USB charging cable length must not be long enough to catch in handlebar or front wheel. This is important to prevent personal injury.

NOTICE: This device complies with part 15 of the FCC Rules. Operation is subject to the following two conditions:

1. This device must not cause harmful interference, and
2. this device must accept any interference received, including interference that may cause undesired operation.

NOTICE: Changes or modifications made to this equipment not expressly approved by the Robert Bosch GmbH may void the FCC authorization to operate this equipment.

NOTE: This equipment has been tested and found to comply with the limits for a Class B digital device, pursuant to Part 15 of the FCC Rules. These limits are designed to provide reasonable protection against harmful interference in a residential installation. This equipment generates, uses and can radiate radio frequency energy and, if not installed and used in accordance with the instructions, may cause harmful interference to radio communications. However, there is no guarantee that interference will not occur in a particular installation. If this equipment does cause harmful interference to radio or television reception, which can be determined by turning the equipment off and on, the user is encouraged to try to correct the interference by one or more of the following measures:

- – Reorient or relocate the receiving antenna.
- – Increase the separation between the equipment and receiver.
- – Connect the equipment into an outlet on a circuit different from that to which the receiver is connected.
- – Consult the dealer or an experienced radio/TV technician for help.

Radiofrequency radiation exposure Information:
The radiated output power of the device is far below the FCC radio frequency exposure limits. Nevertheless, the device shall be used in such a manner that the potential for human contact during normal operation is minimized.

This equipment complies with FCC radiation exposure limits set forth for an uncontrolled environment. This equipment should be installed and operated with minimum distance of 20 cm between the radiator and your body. This transmitter must not be co-located or operating in conjunction with any other antenna or transmitter.

ISED Notice (Canada)

This device contains licence-exempt transmitter(s)/ receiver(s) that comply with Innovation, Science and Economic Development Canada's licence-exempt RSS(s). Operation is subject to the following two conditions:

1. this device may not cause interference, and
2. this device must accept any interference, including interference that may cause undesired operation of the device.

This equipment complies with Canada radiation exposure limits set forth for an uncontrolled environment. This equipment should be installed and operated with minimum distance of 20 cm between the radiator and your body. This transmitter must not be co-located or operating in conjunction with any other antenna or transmitter.

Product description and specifications

Product Features

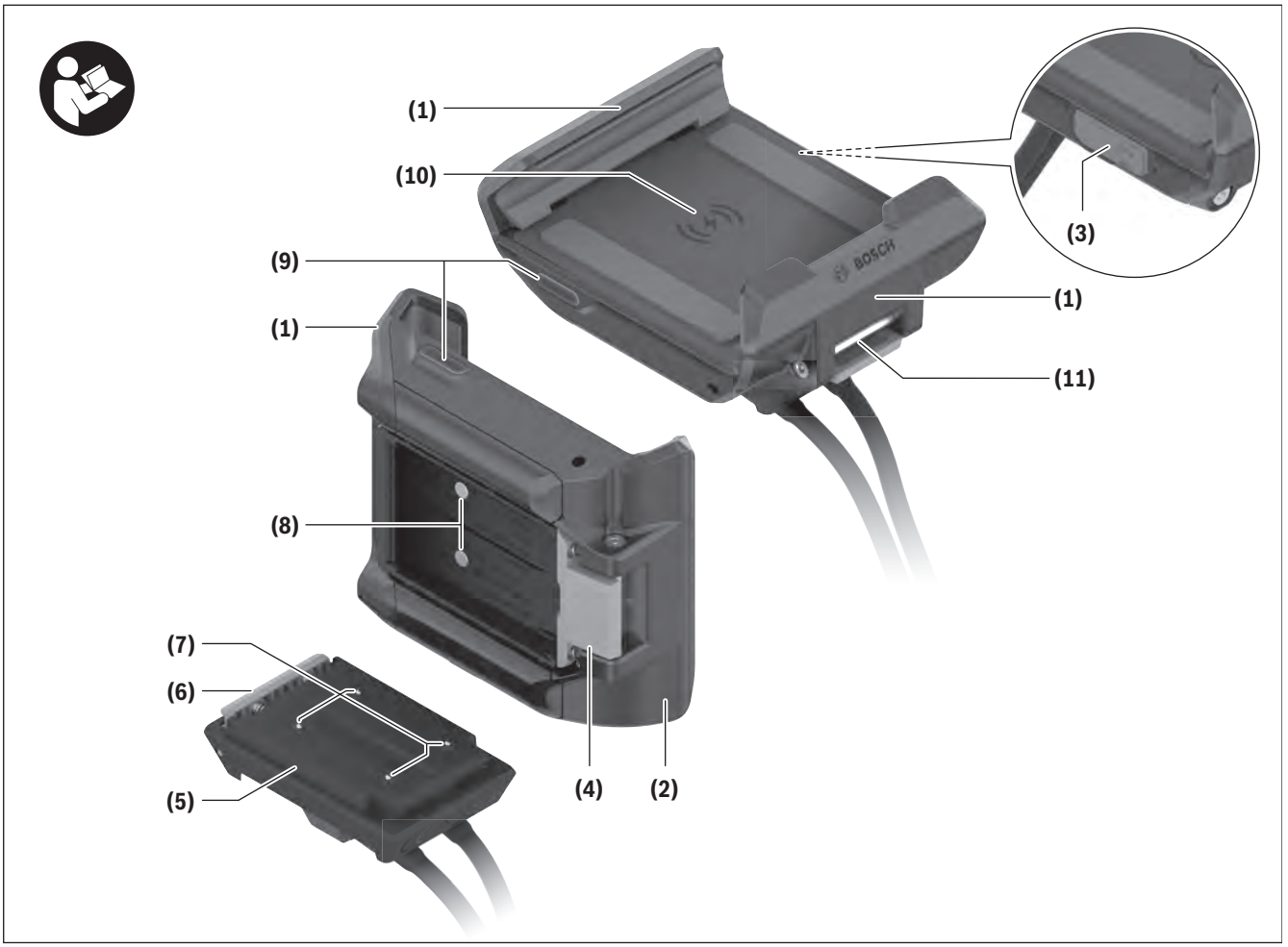

All illustrations of bike parts except for the drive unit, SmartphoneGrip including control unit, speed sensor and the corresponding holders are schematic and may differ on your eBike.

(1) Front retaining bracket, movable
(2) Rear retaining bracket, fixed
(3) USB port with USB cap
(4) Release mechanism
(5) Display Mount[a)]
(6) Snap-in hook
(7) Display Mount contacts
(8) SmartphoneGrip contacts
(9) Status LED
(10) Inductive charging coil
(11) Keypad lock
(12) Hex key[a)]
(13) Smartphone[a)]

a) Not included in the scope of delivery

Intended Use

The Bosch SmartphoneGrip is designed to hold and charge a smartphone on the handlebars of a Bosch eBike from the system generation **the smart system**.

The SmartphoneGrip is suitable for cycling on reinforced paths without jumps and with few drops (< 5.9 in [< 15 cm]) at average speeds of between 9 mph (15 km/h) and 15 mph (25 km/h), for example on asphalt roads, country paths, paths reinforced with gravel or sand, and reinforced woodland paths.

In case of improper use, there is a risk of the smartphone coming loose from the SmartphoneGrip, falling down and becoming damaged as a result. There is also a considerable risk of an accident if the smartphone falls out.

Technical Data

Smartphone holder		SmartphoneGrip
Product code		BSP3200
Max. charging capacity via USB port	W	7.5 (5 V, max. 1.5 A)
Inductive charging capacity	W	5
Operating temperature	°F °C	+23 to +104 −5 to +40
Storage temperature	°F °C	+50 to +104 +10 to +40
Protection rating		IP55
Weight, approx.	lb g	0.2 75

Assembly

Fitting the SmartphoneGrip on the Display Mount

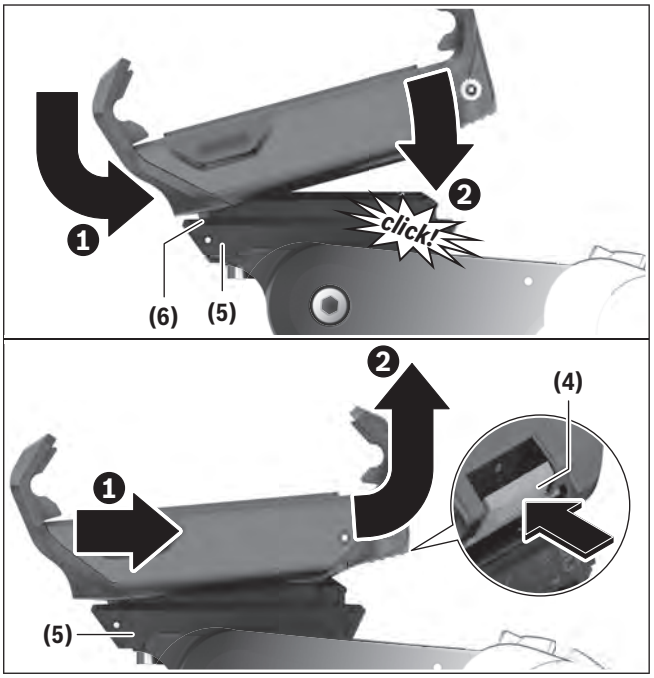

To **attach** the SmartphoneGrip, place the upper edge of the SmartphoneGrip on the snap-in hook **(6)** of the display mount **(5)** ❶. Pull the SmartphoneGrip towards you and push it onto the display mount until the SmartphoneGrip audibly clicks into place ❷.

Press the release mechanism **(4)** while pulling it towards you ❶ to **remove** the SmartphoneGrip. Lift off the SmartphoneGrip and release the release mechanism **(4)** ❷.

Smartphone Assembly

The SmartphoneGrip can hold smartphones in the following sizes:

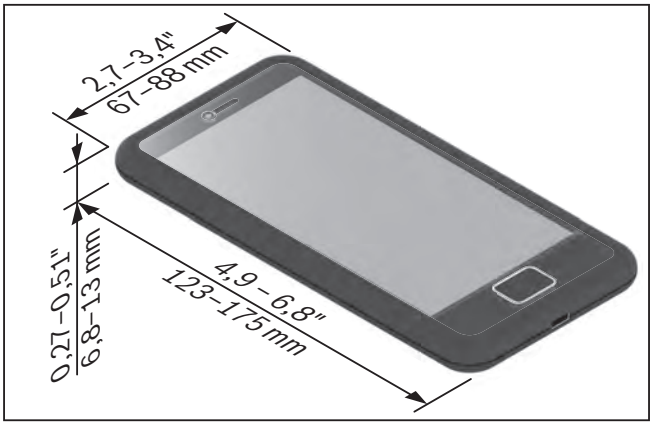

The specified dimensions include any phone cases. **SmartphoneGrip** is not suitable for folding smartphones or smartphones with **folio and carrying cases**.

The total weight must not exceed 0.608 lbs (276 g).

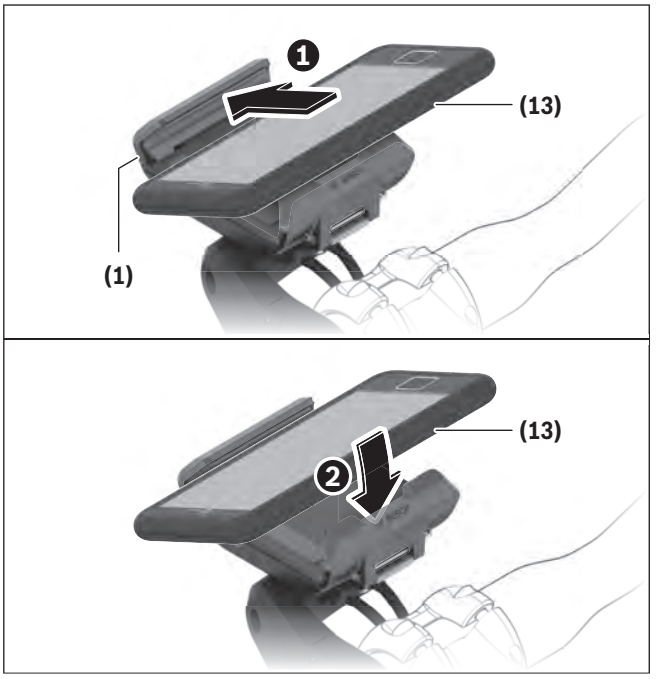

▶ Be careful not to pinch your fingers between the movable retaining bracket and the **SmartphoneGrip** when inserting your smartphone.

Insert your smartphone **(13)** with the long side of the phone positioned at the center against the movable retaining bracket **(1)**. With both hands, press the smartphone **(13)** against the movable retaining bracket **(1)** ❶ and place your smartphone **(13)** in the SmartphoneGrip ❷.

Once you have inserted your smartphone, check that the smartphone cannot come into contact with any hard parts on the bike even in case of vibrations, as this could cause lasting damage to the smartphone.

Keypad Lock Assembly

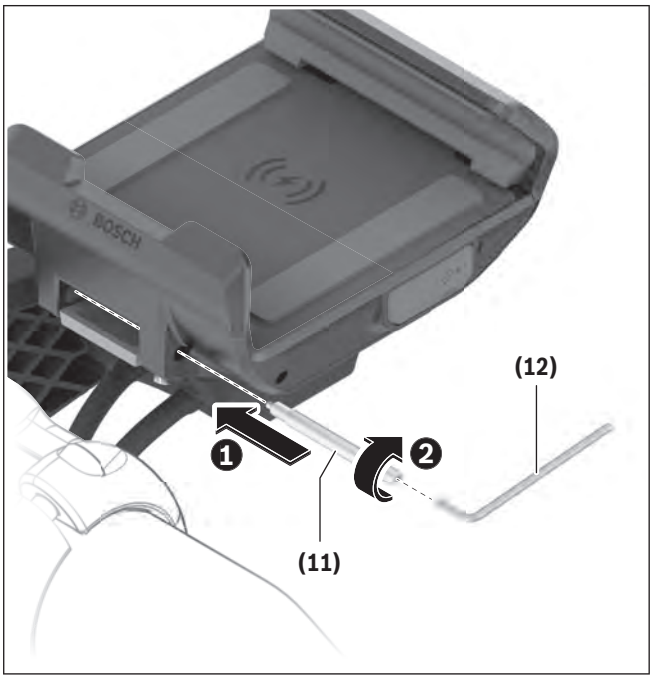

Note: Do not use a ball end hex key.

The keypad lock **(11)** supplied prevents the SmartphoneGrip from being quickly and easily removed by blocking the release mechanism **(4)**.

To **insert** the keypad lock **(11)**, slide the keypad lock **(11)** into the provided opening ❶ and carefully screw it into place with a hex key (1.5 mm) **(12)** ❷.

Note: The keypad lock is not an anti-theft device. The keypad lock prevents the SmartphoneGrip from being quickly removed from the holder. The keypad lock does not affect the smartphone in any way.

Note: Never leave your smartphone unattended in the SmartphoneGrip.

To **remove** the keypad lock **(11)**, unscrew it with a hex key (1.5 mm) **(12)** and remove the keypad lock **(11)**.

Operation

Starting Operation

Put the smartphone in the SmartphoneGrip.

Start the **eBike Flow** app to have riding data displayed.



Depending on the operating system of the smartphone, the **eBike Flow** app can be downloaded free of charge from the Apple App Store or Google Play Store.

Scan the code with your smartphone to download the **eBike Flow** app.

Charging the Smartphone

While the smartphone is in the SmartphoneGrip, it can be charged at the same time as displaying riding data. If your smartphone has an inductive charging function, you can charge the smartphone without needing a cable.

Note: It is not possible to charge your smartphone inductively and via USB cable at the same time.

Inductive Charging

Note: Depending on the phone case, the inductive charging function of the SmartphoneGrip may be limited.

The charging process starts automatically when you place a smartphone with an inductive charging function in the SmartphoneGrip. The status LED **(9)** lights up yellow. When the smartphone is fully charged, the status LED **(9)** will light up green permanently.

The charging process stops when you remove the smartphone from the SmartphoneGrip.

Charging via USB

If your smartphone does not have an inductive charging function, you can charge your smartphone via the USB port **(3)**. To do so, open the USB cap and connect a separate USB cable (not included in the scope of delivery) to the Micro-A USB port.

Pay attention to the type of plug required for your smartphone when purchasing the USB cable.

Note: If the eBike battery reaches a state of charge of 0 %, remove any loads that may be present (e.g. smartphone).

Status Indicators

The status LED **(9)** indicates the following statuses with different colors and lighting patterns.

Status	Behavior
Charging via USB	LED lights up blue.
Start eBike	LED flashes yellow 3 times.
Inductive Charging	LED lights up yellow.
Fully charged	LED lights up green.
Error message	LED flashes red.

The following states are detected and will lead to the inductive charging process being interrupted:

- Detection of foreign objects, e.g. coins, keys, and other metallic objects
- Operating temperature
  If the SmartphoneGrip is outside the operating temperature range, the status LED **(9)** flashes red and the charging process is interrupted. The charging process will resume as soon as the SmartphoneGrip is back within the operating temperature range.

Maintenance and servicing

Maintenance and cleaning

Use a soft cloth dampened only with water for cleaning. Do not use cleaning products of any kind.

▶ **Please make sure you have all repairs carried out by a service center.**

Do not clean any of the components with pressurized water.

After-sales service and advice on using products

If you have any questions about the eBike and its components, contact a service center.

For contact details of service centers, please visit www.bosch-ebike.com.

More information



More information and videos about the eBike components and their functions can be found in the Bosch eBike Help Center.

Transport

▶ **If you transport your eBike attached to the outside of your car, e.g. on a bike rack, remove the SmartphoneGrip and the eBike battery (exception: Built-in eBike battery) to avoid damaging them.**

Recycling Program



The individual eBike components as well as accessories and packaging should be recycled in an environmentally friendly manner.

Do not dispose of eBikes and their components with household waste.



You may recycle your Bosch battery pack by calling 1.800.822.8837.

Robert Bosch GmbH
72757 Reutlingen
Germany

www.bosch-ebike.com

kontakt@bosch.de

0 275 U08 3SG (2026.02) T / 38

SmartphoneGrip Vertical

BSP3300



en Original operating instructions

This manual contains important safety, performance and service information. Read and understand it along with the information provided to you by your bicycle manufacturer before using the product, and keep it for reference.

Table of Contents

Introduction 2
About Warnings 2
General Warnings 2
Using your Manual 3
Operating your Bosch Drive System 4
Safety Instructions 4
Product description and specifications 7
Assembly 9
Operation 11
Maintenance and servicing 12
Maintenance and cleaning 12
After-sales service and advice on using products 12
More information 12
Transport 12
Recycling Program 12

Introduction

About Warnings

This manual contains many **DANGER**, **WARNING**, and **CAUTION** indicators concerning the consequences of failure to use, assemble, maintain, store, inspect and dispose of a Bosch-equipped eBike in a safe manner.

– The combination of the safety alert symbol and the word **DANGER** indicates a hazardous situation that, if not avoided, will result in death or serious injury.
– The combination of the safety alert symbol and the word **WARNING** indicates a hazardous situation that, if not avoided, could result in death or serious injury.
– The combination of the safety alert symbol and the word **CAUTION** indicates a hazardous situation that, if not avoided, could result in minor or moderate injury.

General Warnings



Read all safety warnings and all instructions. Failure to follow the warnings and instructions may result in death or serious injury.

Save all safety warnings and instructions for future reference.

The term **eBike battery** used in these operating instructions refers to all original Bosch eBike batteries from the system generation **the smart system**.

▶ **Read ALL accompanying manuals before riding the bike for the first time.** Your Bosch Drive System comes with additional manuals and documents provided by the manufacturer of the bicycle and other components. Failure to read and understand safety information can result in death or serious injury.

⚠ WARNING

▶ **This manual contains important safety, performance and service information.** Read it before you take the first ride on your new bicycle, and keep it for reference. The manual can also be found online at www.bosch-ebike.com.

▶ **This manual is intended to be read together with the separate user manual provided with your bicycle.** Be sure to read all provided documents including labels on the product before your first ride.

▶ **Take responsibility for your own SAFETY.** If you have any questions or do not understand something, consult with your dealer or the bicycle or component manufacturer.

▶ **Some eBike accessories may present a choking hazard to small children.** Keep these accessories away from children.

⚠ CAUTION

▶ **The Bosch Drive System adds weight to your bicycle which you may not be used to lift.** Avoid injury, use proper lifting techniques.

Using your Manual

In addition to the functions outlined here, changes to software relating to troubleshooting and functional modifications may be introduced at any time.

Graphics

The bicycle shown in this manual may differ slightly from your bicycle, but will be similar enough to help you understand our instructions.

RIGHT-HAND and LEFT-HAND sides are determined by facing in the direction the bicycle will travel when going forward. When you see a broken line (------), the item referred to is hidden from view.

Operating your Bosch Drive System

Safety Instructions



Read all the safety information and instructions. Failure to observe the safety information and follow instructions may result in electric shock, fire and/or serious injury.

Save all safety warnings and instructions for future reference.

The term **eBike battery** used in these operating instructions refers to all original Bosch eBike batteries from the system generation **the smart system**.

The terms **drive** and **drive unit** used in these operating instructions refer to all original Bosch drive units from the system generation **the smart system**.

- ▸ **Read and observe the safety warnings and instructions in all operating instructions of the eBike components and your eBike.**
- ▸ **Do not allow your attention to be diverted from surrounding traffic when using Bosch eBike components, and always ride with both hands on the handlebars. Always observe the applicable legal provisions in your country for the permitted use of your eBike in road traffic. In particular, note that it is prohibited to pick up or hold your smartphone in your hand in road traffic.**
- ▸ **Set the smartphone brightness so that you can adequately see important information such as speed and warning symbols.** Incorrectly set brightness may lead to dangerous situations.
- ▸ **The contact surfaces of the Display Mount can get very hot (> 140 °F [> 60 °C]). Allow the contact surfaces to reach the correct temperature before you touch them.** This is particularly important when using a **SmartphoneGrip Vertical**.
- ▸ **Seek medical advice before using fitness apps.** Fitness apps may cause people to overexert themselves physically.
- ▸ **Always observe local restrictions for using electronic devices.**
- ▸ **Avoid using the device in close proximity to your body over an extended period of time.**
- ▸ **Do not stand your eBike upside down on its saddle and handlebars if the SmartphoneGrip Vertical or Display Mount protrude from the handlebars.** This may irreparably damage the **SmartphoneGrip Vertical** or Display Mount.
- ▸ **Do not use the SmartphoneGrip Vertical as a handle.** Lifting the eBike up by the **SmartphoneGrip Vertical** can cause irreparable damage to the **SmartphoneGrip Vertical** and Display Mount.
- ▸ **Do not open the SmartphoneGrip Vertical.** Opening the **SmartphoneGrip Vertical** can destroy it and void any warranty claims.
- ▸ **When inserting the smartphone in the SmartphoneGrip Vertical, do not let go of the movable retaining bracket.** There is a risk of fingers getting crushed.
- ▸ **SmartphoneGrip Vertical is not suitable for children under 14 years of age.** Supervise children. This will ensure that they do not play with the product.
- ▸ **Caution!** When using the SmartphoneGrip Vertical with inductive charging technology, a fault may occur in other devices and systems, airplanes, and medical devices (e.g. pacemakers, hearing aids). Likewise, injury to people and animals in the immediate vicinity cannot be excluded entirely. Do not use the SmartphoneGrip Vertical with inductive charging technology in the vicinity of medical devices, petrol stations, chemical plants, areas with a potentially explosive atmosphere or on blast sites. Do not use the SmartphoneGrip Vertical with induc-

tive charging technology in airplanes. Avoid operation near your body for extended periods.

- ▶ **Do not enter information or make selections while riding.** Interacting with the display or control unit while riding can lead to accidents causing serious injury or death. You must observe road and traffic conditions, and comply with traffic laws at all times.
- ▶ **Using your mobile device while operating an eBike may be distracting. Distracted driving is a serious safety concern and can lead to accidents causing serious injury or death. In order to prevent distracted driving, most devices come equipped with a "Do Not Disturb" mode. The "Do Not Disturb" mode should be used while operating an eBike.** Please consult your device-specific instructions for more information. You, as the eBike operator, are fully responsible for ensuring that you pay attention to road conditions and comply with traffic laws at all times.
- ▶ Please note that certain State or local laws may require that class III eBikes must be equipped with a functioning speedometer that displays speed in miles per hour. Riders must be aware of any and all applicable rules and regulations related to the operation or use of class III eBikes in any applicable jurisdictions before operating or otherwise using this product.
- ▶ **Choose the USB charging cable length appropriately.** USB charging cable length must not be long enough to catch in handlebar or front wheel. This is important to prevent personal injury.

NOTICE: This device complies with part 15 of the FCC Rules. Operation is subject to the following two conditions:

1. This device must not cause harmful interference, and
2. this device must accept any interference received, including interference that may cause undesired operation.

NOTICE: Changes or modifications made to this equipment not expressly approved by the Robert Bosch GmbH may void the FCC authorization to operate this equipment.

NOTE: This equipment has been tested and found to comply with the limits for a Class B digital device, pursuant to Part 15 of the FCC Rules. These limits are designed to provide reasonable protection against harmful interference in a residential installation. This equipment generates, uses and can radiate radio frequency energy and, if not installed and used in accordance with the instructions, may cause harmful interference to radio communications. However, there is no guarantee that interference will not occur in a particular installation. If this equipment does cause harmful interference to radio or television reception, which can be determined by turning the equipment off and on, the user is encouraged to try to correct the interference by one or more of the following measures:

- Reorient or relocate the receiving antenna.
- Increase the separation between the equipment and receiver.
- Connect the equipment into an outlet on a circuit different from that to which the receiver is connected.
- Consult the dealer or an experienced radio/TV technician for help.

Radiofrequency radiation exposure Information:
The radiated output power of the device is far below the FCC radio frequency exposure limits. Nevertheless, the device shall be used in such a manner that the potential for human contact during normal operation is minimized.

This equipment complies with FCC radiation exposure limits set forth for an uncontrolled environment. This equipment should be installed and operated with minimum distance of 20 cm between the radiator and your body. This transmitter must not be co-located or operating in conjunction with any other antenna or transmitter.

ISED Notice (Canada)

This device contains licence-exempt transmitter(s)/ receiver(s) that comply with Innovation, Science and Economic Development Canada's licence-exempt RSS(s). Operation is subject to the following two conditions:

1. this device may not cause interference, and
2. this device must accept any interference, including interference that may cause undesired operation of the device.

This equipment complies with Canada radiation exposure limits set forth for an uncontrolled environment. This equipment should be installed and operated with minimum distance of 20 cm between the radiator and your body. This transmitter must not be co-located or operating in conjunction with any other antenna or transmitter.

Product description and specifications

Product Features

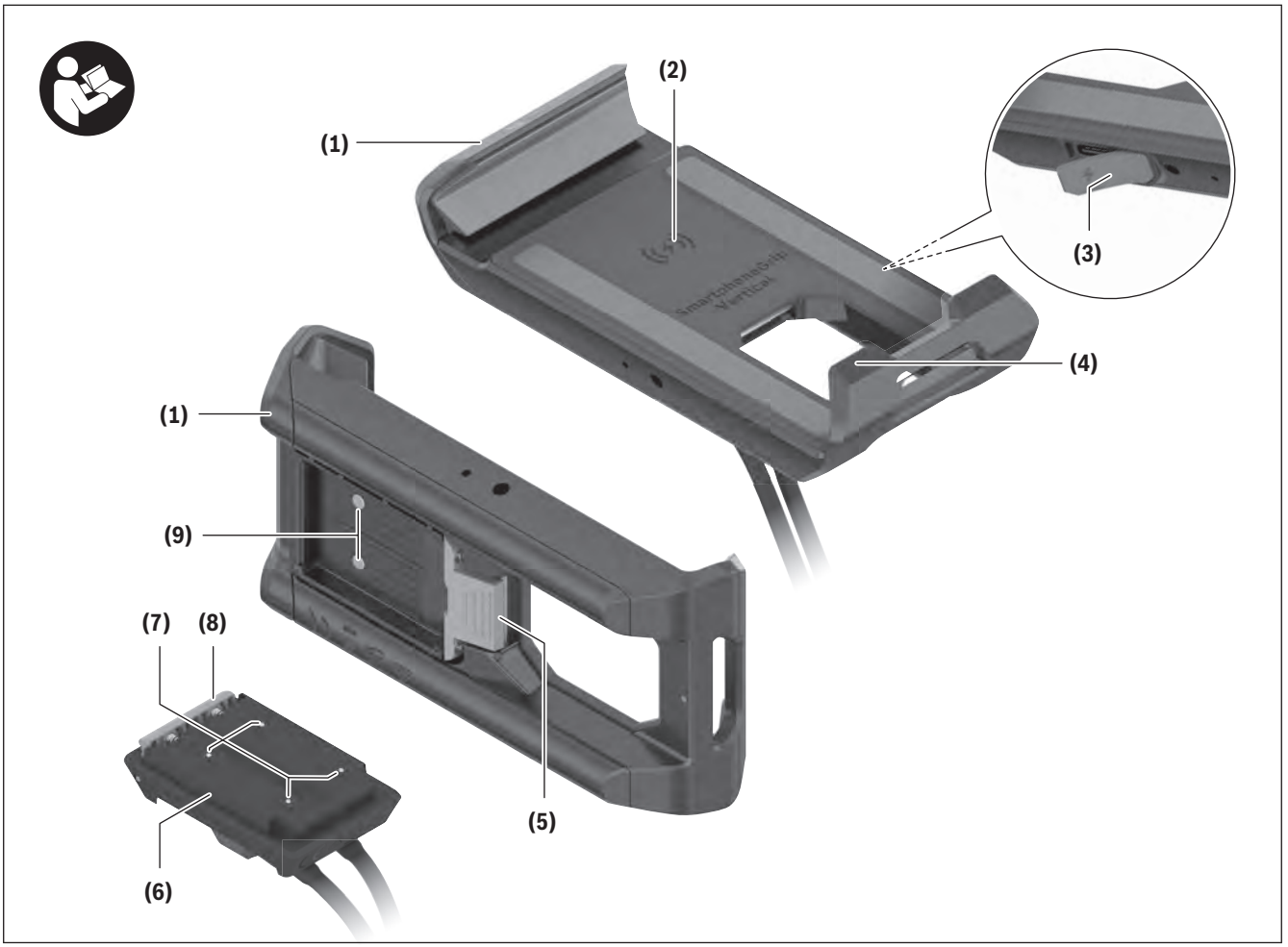

All illustrations of bike parts except for the drive unit, SmartphoneGrip Vertical (including control unit), speed sensor, and the corresponding holders are a schematic representation and may differ on your eBike.

(1) Front retaining bracket, movable
(2) Inductive charging coil
(3) USB-C® port[a)] with USB cap
(4) Rear retaining bracket, fixed
(5) Release mechanism
(6) Display Mount[b)]
(7) Display Mount contacts
(8) Snap-in hook
(9) SmartphoneGrip Vertical contacts
(10) Keypad lock
(11) Hex key (1.5 mm)[b)]
(12) Smartphone[b)]

a) USB Type-C® and USB-C® are trademarks of USB Implementers Forum.
b) Not included in the scope of delivery

Intended Use

The Bosch SmartphoneGrip Vertical is designed to hold and charge a smartphone on the handlebars of a Bosch eBike from the system generation **the smart system**.

The SmartphoneGrip Vertical is suitable for cycling on reinforced paths without jumps and with few drops (< 5.9 in [< 15 cm]) at average speeds of between 9 mph (15 km/h) and 15 mph (25 km/h), for example on asphalt roads, country paths, paths reinforced with gravel or sand, and reinforced woodland paths.

In case of improper use, there is a risk of the smartphone coming loose from the SmartphoneGrip Vertical, falling down, and becoming damaged as a result. There is also a considerable risk of an accident if the smartphone falls out.

Technical Data

Smartphone holder		SmartphoneGrip Vertical
Product code		BSP3300
Max. charging capacity via USB-C® port	W	7.5 (5 V, max. 1.5 A)
Inductive charging capacity	W	5
Operating temperature	°F °C	+23 to +104 −5 to +40
Storage temperature	°F °C	+50 to +104 +10 to +40
Protection rating		IP55
Weight, approx.	lb g	0.2 97

Assembly

Fitting the SmartphoneGrip Vertical on the Display Mount

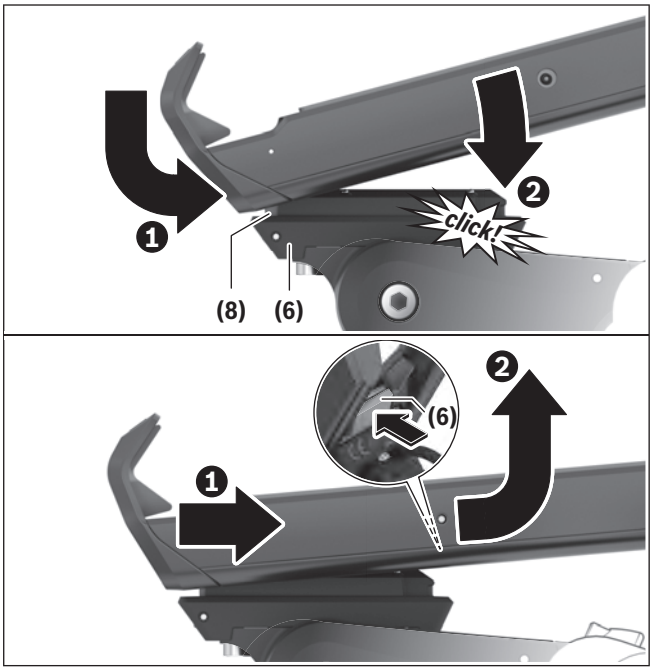

To **attach** the SmartphoneGrip Vertical, place the upper edge of the SmartphoneGrip Vertical on the snap-in hook **(8)** of the display mount **(6)** ❶. Pull the SmartphoneGrip Vertical towards you and push it onto the display mount until the SmartphoneGrip Vertical audibly clicks into place ❷.

Press the release mechanism **(5)** while pulling it towards you ❶ to **remove** the SmartphoneGrip Vertical. Remove the SmartphoneGrip Vertical and let go of the release mechanism **(5)** ❷.

Smartphone Assembly

The SmartphoneGrip Vertical can hold smartphones in the following sizes:

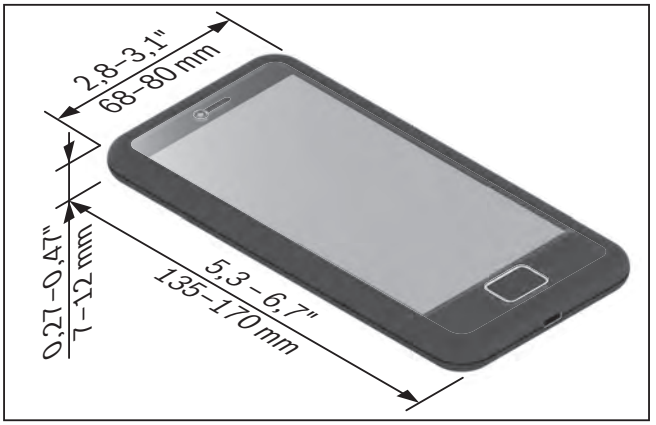

The specified dimensions include any phone cases. **SmartphoneGrip Vertical** is not suitable for folding smartphones or smartphones with **folio and carrying cases**.

The total weight of the smartphone and case must not exceed 0.573 lbs (260_g).

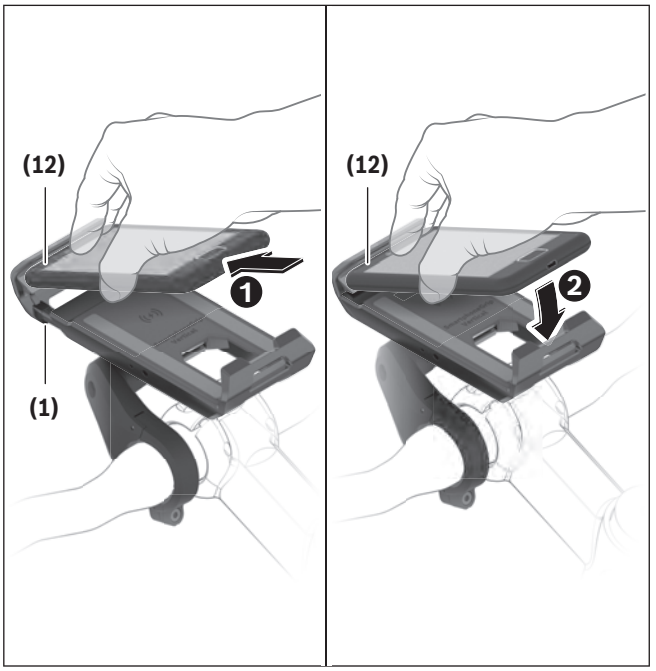

▶ Be careful not to pinch your fingers between the movable retaining bracket and the

SmartphoneGrip Vertical when inserting your smartphone.

Insert your smartphone **(12)** with the short side of the phone positioned at the center against the movable retaining bracket **(1)**. Press the smartphone **(12)** against the movable retaining bracket **(1)** ❶ and place the smartphone **(12)** in the SmartphoneGrip Vertical ❷. Ensure that the smartphone is correctly and securely positioned.

Once you have inserted your smartphone, check that the smartphone cannot come into contact with any hard parts on the eBike even in case of vibrations, as this could cause lasting damage to the smartphone.

Keypad Lock Assembly

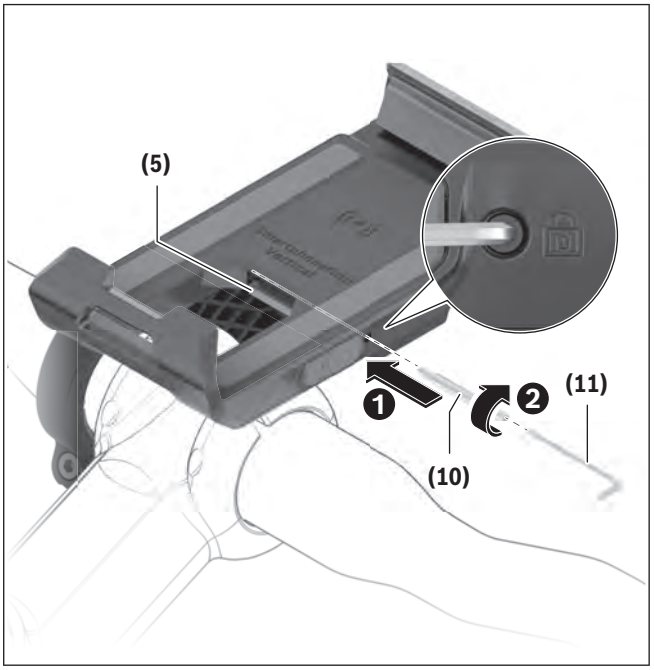

Note: Do not use a ball end hex key.

The keypad lock **(10)** supplied prevents the SmartphoneGrip Vertical from being quickly and easily removed by blocking the release mechanism **(5)**.

To **insert** the keypad lock **(10)**, slide the keypad lock **(10)** into the provided opening ❶ with the padlock symbol, and carefully screw it into place with a hex key (1.5 mm) **(11)** ❷.

Note: The keypad lock is not an anti-theft device. The keypad lock prevents the SmartphoneGrip Vertical from being quickly removed from the holder. The keypad lock does not affect the smartphone in any way.

Note: Never leave your smartphone unattended in the SmartphoneGrip Vertical.

To **remove** the keypad lock **(10)**, unscrew it with a hex key (1.5 mm) **(11)** and remove the keypad lock **(10)**.

Operation

Starting Operation

Place your smartphone in the SmartphoneGrip Vertical.

Start the **eBike Flow** app to have riding data displayed.



Depending on the operating system of the smartphone, the **eBike Flow** app can be downloaded free of charge from the Apple App Store or Google Play Store.

Scan the code with your smartphone to download the **eBike Flow** app.

Charging the Smartphone

While the smartphone is in the SmartphoneGrip Vertical, it can be charged at the same time as displaying riding data. If your smartphone has an inductive charging function, you can charge the smartphone without needing a cable.

Note: It is not possible to charge your smartphone inductively and via USB-C® cable at the same time.

Inductive Charging

Note: Depending on the phone case, the inductive charging function of the SmartphoneGrip Vertical may be limited.

The charging process starts automatically when you place a smartphone with an inductive charging function in the SmartphoneGrip Vertical.

The charging process stops when you remove the smartphone from the SmartphoneGrip Vertical.

Note: There are some smartphone types for which the distance to the inductive charging surface is too great, meaning that inductive charging does not work.

Charging via USB

If your smartphone does not have an inductive charging function, you can charge your smartphone via the USB-C® port **(3)**. To do so, open the USB cap and connect a separate USB-C® cable (not included in the scope of delivery) to the USB-C® port.

Pay attention to the type of plug required for your smartphone when purchasing the USB cable.

Note: If the eBike battery reaches a state of charge of 0 %, remove any loads that may be present (e.g. smartphone).

Interruption of the Inductive Charging Process

The following states are detected and will lead to the inductive charging process being interrupted:

- Detection of foreign objects, e.g. coins, keys, and other metallic objects
- Operating temperature
  If the SmartphoneGrip Vertical is outside the operating temperature range, the charging process is interrupted. The charging process will resume as soon as the SmartphoneGrip Vertical is back within the operating temperature range.

Note: If the inductive charging process is interrupted, the charging symbol on your smartphone goes off.

Maintenance and servicing

Maintenance and cleaning

Use a soft cloth dampened only with water for cleaning. Do not use cleaning products of any kind.

▶ **Please make sure you have all repairs carried out by a service center.**

Do not clean any of the components with pressurized water.

After-sales service and advice on using products

If you have any questions about the eBike and its components, contact a service center.

For contact details of service centers, please visit www.bosch-ebike.com.

More information



More information and videos about the eBike components and their functions can be found in the Bosch eBike Help Center.

Transport

▶ **If you transport your eBike attached to the outside of your car, e.g. on a bike rack, remove the SmartphoneGrip Vertical and the eBike battery (exception: Built-in eBike battery) to avoid damaging them.**

Recycling Program



The individual eBike components as well as accessories and packaging should be recycled in an environmentally friendly manner.

Do not dispose of eBikes and their components with household waste.



You may recycle your Bosch battery pack by calling 1.800.822.8837.

Robert Bosch GmbH
72757 Reutlingen
Germany

www.bosch-ebike.com

kontakt@bosch.de

0 275 U08 3SV (2026.02) T / 38

Drive Unit

BDU3060 | BDU3061



en Original operating instructions

This manual contains important safety, performance and service information. Read and understand it along with the information provided to you by your bicycle manufacturer before using the product, and keep it for reference.

Hub Line

Table of Contents

Introduction 2
About Warnings 2
General Warnings 2
Using your Manual 3
Operating your Bosch Drive Unit 4
Safety instructions 4
Product description and specifications 6
Assembly 7
Operation 8
Maintenance/Cleaning 10
Adjusting the cadence sensor 11
Cleaning 12
Taking care of your eBike 12
After-sales service and advice on using products 12
More information 12
Disposal 12

Introduction

Some content is published under license from the **PeopleForBikes Coalition, LTD**.

About Warnings

This manual contains many **DANGER**, **WARNING** and **CAUTION** indicators concerning the consequences of failure to use, assemble, maintain, store, inspect and dispose of a Bosch-equipped eBike in a safe manner.

– The combination of the safety alert symbol and the word **DANGER** indicates a hazardous situation that, if not avoided, will result in death or serious injury.
– The combination of the safety alert symbol and the word **WARNING** indicates a hazardous situation that, if not avoided, could result in death or serious injury.
– The combination of the safety alert symbol and the word **CAUTION** indicates a hazardous situation that, if not avoided, could result in minor or moderate injury.

General Warnings



Read all safety warnings and all instructions. Failure to follow the warnings and instructions may result in death, property damage or serious injury.

Save all safety warnings and instructions for future reference.

The term **eBike battery** used in these operating instructions refers to all original Bosch eBike batteries from the system generation **the smart system**.

▶ **Read ALL accompanying manuals before riding the bike for the first time.** Your Bosch Drive System comes with additional manuals and documents provided by the manufacturer of the bicycle and other components. Failure to read and understand safety information can result in death or serious injury.

⚠ WARNING

▶ **This manual contains important safety, performance and service information.** Read it before you take the first ride on your new bicycle, and keep it for reference. The manual can also be found online at www.bosch-ebike.com.

▶ **This manual is intended to be read together with the separate user manual provided with your bicycle.** Be sure to read all provided documents including labels on the product before your first ride.

▶ **Take responsibility for your own SAFETY.** If you have any questions or do not understand something, consult with your dealer or the bicycle or component manufacturer.

▶ **Some eBike accessories may present a choking hazard to small children.** Keep these accessories away from children.

⚠ CAUTION

▶ **The Bosch Drive System adds weight to your bicycle which you may not be used to lift.** Avoid injury, use proper lifting techniques.

Using your Manual

In addition to the functions outlined here, changes to software relating to troubleshooting and functional modifications may be introduced at any time.

Graphics

The bicycle shown in this manual may differ slightly from your bicycle, but will be similar enough to help you understand our instructions.

RIGHT-HAND and LEFT-HAND sides are determined by facing in the direction the bicycle will travel when going forward. When you see a broken line (------), the item referred to is hidden from view.

Operating your Bosch Drive Unit

Safety instructions



Read and understand all safety warnings and instructions. Failure to follow the below warnings could result in death or serious injury.

Save all safety warnings and instructions for future reference.

The term **eBike battery** used in these operating instructions refers to all original Bosch eBike batteries from the system generation **the smart system**.

The terms **drive** and **drive unit** used in these operating instructions refer to all original Bosch drive units from the system generation **the smart system**.

- ▶ **Read and observe the safety warnings and instructions in all operating instructions of the eBike components and your eBike.**
- ▶ **It is recommended that you periodically review this information to ensure you are following all recommendations for safe use of this product.**
- ▶ **Do not make any kind of modifications to the drive. Do not use any products to increase the performance and/or top speed of the eBike.** Modifying an eBike to increase its performance or speed may be unlawful and can result in component failure or a loss of control, leading to a crash resulting in serious injury or death. A modified eBike may no longer be regulated as an eBike, placing the operator at risk of personal liability and criminal prosecution in the event of a crash. In addition, doing so will generally reduce the service life of the eBike components. The drive unit and eBike may be damaged and guarantee and warranty claims on the eBike you have purchased may consequently be voided.
- ▶ **Do not open the drive unit. The drive unit must be repaired using only original spare parts and only by an authorized bicycle retailer.** This will ensure that the eBike remains safe to use. Unauthorized opening of the drive unit may render warranty claims null and void.
- ▶ **Remove the eBike battery from the eBike before beginning work (e.g. inspection, repair, assembly, maintenance, work on the chain, etc.) on the eBike. When working on permanently installed eBike batteries, take particular care to ensure that the eBike cannot be switched on.** Unintentional activation of the eBike poses a risk of injury.
- ▶ **The eBike can be switched on by pushing the eBike backwards or by turning the pedals backwards.**
- ▶ **If you move your eBike backwards and this puts strain on the chain, the next time you move forwards, there may be a brief push from the drive.** The chain ends up under strain, for instance, if
  – several gears are changed at once and the chain has not yet reached the right pinion,
  – the chain is very dirty,
  – the chain is rusted.
- ▶ **You must not remove built-in eBike batteries yourself. Have a service center install and remove built-in eBike batteries for you.**



Parts located close to the wheel hub, e.g. linchpin and rear frame, can reach temperatures in excess of 140 °F (60 °C).

- ▶ **After a ride, do not allow your bare hands or legs to come into contact with the rear frame near the drive.** Under extreme conditions, such as continuously high torques at low travel speeds, or when riding up hills or carrying loads, the rear frame, drive, brakes and linchpin may reach very high temperatures.

The temperature that the rear frame, drive, brakes and linchpin may reach is influenced by the following factors:
- – Ambient temperature
- – Ride profile (route/gradient)
- – Ride duration
- – Riding modes
- – User behavior (personal effort)
- – Total weight (rider, eBike, luggage)
- – Heat dissipation properties of the bike frame
- – Type of gear-shifting
- – Load on the brakes

- ▶ **It is recommended to only use original Bosch eBike batteries from the system generation the smart system.**
- ▶ **Throttle must only be used when riding the bike.** Do not use throttle while walking, pushing the bike or if the wheels of the eBike are not in contact with the ground as it may result in injury.
- ▶ **Observe all national regulations which set out the approved use of eBikes.**

Privacy notice

When connecting the eBike to the **Bosch DiagnosticTool 3** or when exchanging eBike components, technical information about your eBike (e.g. bicycle manufacturer, model, bike ID, configuration data) as well as regarding the use of the eBike (e.g. total travel time, energy consumption, temperature) is transmitted to Bosch eBike Systems (Robert Bosch GmbH) for processing your request, in service cases and for the purposes of product improvement. You can find further information about data processing at www.bosch-ebike.com/privacy-full.

Product description and specifications

Intended use

The Bosch drive unit from the system generation **the smart system** is intended exclusively for driving your eBike and must not be used for any other purpose.

In addition to the functions outlined here, changes to software relating to troubleshooting and functional modifications may be introduced at any time.

Technical Data

Drive unit		Drive Unit Hub Line
Product code		BDU3060 BDU3061
Continuous rated power	W	250
Max. torque	lb ft Nm	33[A)] 45[A)]
Rated voltage	V	36
Operating temperature	°F °C	+23 to +104 −5 to +40
Storage temperature	°F °C	+50 to +104 +10 to +40
Protection rating		IP55
Weight, approx.	lbs kg	5.1 2.3

A) You can change the preset value via the **eBike Flow** app. The maximum torque may vary depending on the bicycle manufacturer's specifications.

Bosch eBike Systems uses FreeRTOS (see www.freertos.org).

Bicycle lights[A)]		
Voltage approx.	V	12
Maximum power	W	18

A) Depends on legal regulations, not possible in all country-specific models via the eBike battery

Inserting a bulb incorrectly can cause it to blow.

Details on noise emissions on the drive unit

The A-rated emission sound pressure level for the drive unit is < 70 dB(A) in standard operating mode.

Assembly

Removing and fitting the rear wheel

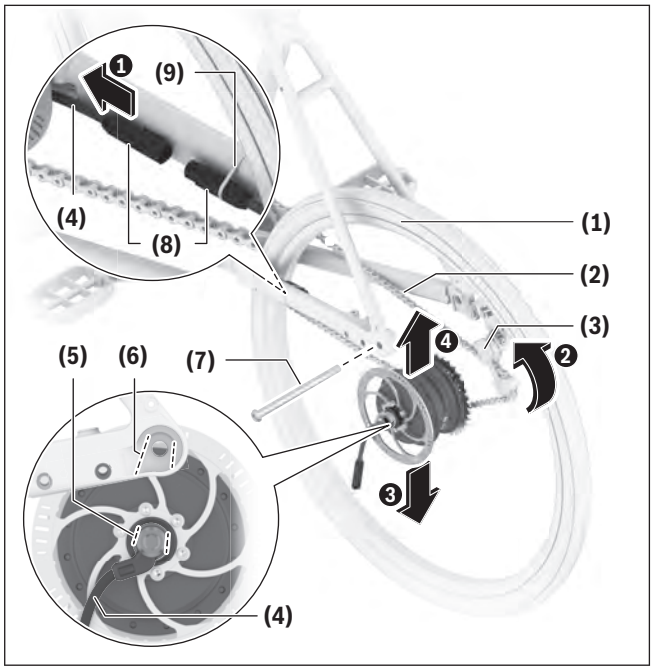

(1) Rear wheel with drive unit
(2) Bicycle chain
(3) Gearing
(4) Cable for drive unit
(5) Turn lock
(6) Recess in the left-hand dropout
(7) Linchpin
(8) Plug connection
(9) Cable ties, cable clip

- ▸ **During a ride, the rear frame around the drive and the brakes can reach very high temperatures.** Wait until all parts have cooled down before removing the rear wheel.

Note: When removing and fitting the rear wheel, make sure no oil or fat gets into the brake disc or brake pads.

Note: When disconnecting and connecting electrical plug connections, make sure that the plug connections are clean and dry.

Note: A suitable assembly stand is recommended for removing and fitting the rear wheel.

Note: When removing and fitting the rear wheel, you may need a suitable tool for the linchpin and, if necessary, new cable ties or cable clips to secure the connection cable.

Note: To make removing and fitting the rear wheel **(1)** easier, pivot the rear gearing **(3)** back a little by hand ❷ during the process.

Note: To make removing and fitting the rear wheel **(1)** easier, adjust the gearing **(3)** on the rear wheel so that the bicycle chain **(2)** is positioned on the smallest pinion.

Removing the rear wheel

Disconnect the drive unit cable **(4)** from the plug connection **(8)** ❶.

If necessary, undo the cable tie or cable clip **(9)** securing the plug connection **(8)** to the bike frame.

Loosen the linchpin **(7)** by turning it counterclockwise using a tool that fits the linchpin.

Hold the rear wheel **(1)** in place and unscrew the linchpin **(7)**.

Then lift the rear wheel **(1)** out of the bike frame ❸.

Note: Do no actuate the rear wheel brakes while the rear wheel is removed.

Fitting the rear wheel

Align the rear wheel **(1)** so that the cable **(4)** of the drive unit is pointing forward.

Insert the rear wheel **(1)** in the rear frame ❹. In doing so, observe the following:

- The rear gearing is in the position that equates to the smallest pinion.
- Place the bicycle chain on the smallest pinion before fitting the rear wheel.
- When fitting the rear wheel, position the brake disc correctly between the two brake pads.
- Position the turn lock **(5)** of the drive unit correctly in the recess **(6)** of the left-hand dropout.

Secure the rear wheel **(1)** with the linchpin **(7)**.

Note: Observe the tightening torque prescribed by the bicycle manufacturer for the linchpin.

Connect the drive unit cable **(4)**.

Lay the drive unit cable **(4)** at a sufficient distance from the brake disc and rear wheel, as prescribed by the bicycle manufacturer.

Secure the cable **(4)** back on to the bike frame, e.g. with a cable tie or cable clip **(9)**.

Note: To prevent damage to the cable **(4)**, you should place the cable tie or cable clip directly in the notch on the plug housing or at a distance of at least approx. 0.6 in (15 mm) in front of the plug housing. When assembling the plug connection **(8)**, make sure that the plug connection is correctly sealed, without any gaps between the two plug housings.

Then check that the drive, brakes and gearing are working correctly.

Operation

A control unit from the system generation **the smart system** is required for starting operation of the eBike. Observe the operating instructions for the control unit and additional components from the system generation **the smart system** where necessary.

Notes on cycling with your eBike

When does the drive take effect for Pedal Assist?

The drive assists your cycling only when you are pedaling. If you do not pedal, the assistance will not work.

The drive output always depends on the cadence that you apply.

With a less frequent cadence or less incline or acceleration, the assistance provided will be lower than that supplied at a more frequent cadence or higher less incline or acceleration.

This applies irrespective of the riding mode. The drive automatically switches off at speeds over **20 mph (32 km/h)** or **28 mph (45 km/h)** based on the configuration of the bike. When the speed falls below **20 mph (32 km/h)** or **28 mph (45 km/h)** based on the configuration of the bike, the drive automatically becomes available again.

An exception applies to the walk assist function, in which the eBike can be pushed at low speed without pedaling. The pedals may rotate when the walk assistance is in use. You can also use the eBike as a normal bicycle without assistance at any time, either by switching off the eBike or by setting the riding mode to **OFF**. The same applies when the eBike battery is drained.

When does the drive take effect for Throttle?

The drive assists your cycling by activating the throttle assistance. If you do not activate the throttle, the assistance will not work.

The drive output always depends on the throttle that you apply. The farther you engage the throttle, the higher the assistance will be.

This applies regardless of the riding mode. The drive automatically switches off at speeds over **20 mph (32 km/h)**. When the speed falls below **20 mph (32 km/h)**, the drive automatically becomes available again.

Please also note that assistance via throttle will be cut if the brakes are applied. As soon as the brakes are released assistance via throttle will be available again.

An exception applies to the walk assist function, in which the eBike can be pushed at low speed without pedaling. The pedals may rotate when the walk assistance is in use. You can also use the eBike as a normal bicycle without assistance at any time, either by switching off the eBike or by setting the riding mode to **OFF**. The same applies when the eBike battery is drained.

When pedaling and using the throttle at the same time, the throttle provides motor assistance up to **20 mph (32 km/h)**, and pedal assist provides motor assistance up to **20 mph (32 km/h)** or **28 mph (45 km/h)** based on the configuration of the bike.

Interaction of the drive unit with the gear-shifting

You should shift through gears on an eBike in the same manner as when using a normal bicycle (observe the operating instructions of your eBike with regard to this point).

Irrespective of the type of gear shifting, it is advisable that you briefly reduce the pressure on the pedals when changing gear. This will aid gear shifting and reduce wear on the powertrain.

By selecting the correct gear, you can increase your speed and range while applying the same amount of force.

Gaining initial experience

We recommend that you gain initial experience with the eBike away from busy roads.

Test the various riding modes. Start in a riding mode with a small amount of assistance. As soon as you feel confident, you can ride your eBike in traffic like any other bicycle.

Test the range of your eBike in different conditions before planning longer and more demanding trips.

Influences on range

It is not possible to calculate the range accurately before and during a trip because the range is affected by a number of factors.

Enter the factors in the Range Assistant in order to better assess the effects on the range.

Scan the code provided to open the Range Assistant.

Maintenance/Cleaning

⚠ WARNING

- **Do not open any of the components. Service should only be carried out at an authorized Bosch eBike dealer.** Failure to follow above warning can cause death or serious injury. Refer to your bicycle manual or component manual for all non-Bosch drive system components.
- **Always remove the battery pack before performing any bicycle inspection, maintenance or repair.** Failure to remove the battery pack before performing bicycle inspection, maintenance or repair can lead to serious injury.
- **If you suspect that something is loose, do not ride your bike.** See your Bosch eBike dealer, only a qualified service provider should perform work on your Bosch Drive System. All nuts, bolts, screws require the correct tightening force. Too little force and the fastener may not hold securely. Too much force and the fastener can strip threads, stretch, deform or break. Either way, incorrect tightening force can result in component failure, which can cause you to lose control and fall.
- **If replacing your battery, buy only a genuine Bosch battery pack from an approved source. See your Bosch eBike dealer for original Bosch parts.**
- **Always switch the battery pack off, when inserting or removing it from the holder.** Never attempt to insert or remove the battery pack while riding the bike.
- **Do not charge or use your eBike in any area with a potentially explosive atmosphere, such as at a fueling area, or in areas where the air contains chemicals or particles (such as grain, dust, or metal powders).** Obey all signs and instructions.
- **Do not submerge your eBike components in water, or wash with pressurized hose.** Your Bosch drive unit is designed to be water tight to rain water or non-pressure hose washing.
- **Note down the manufacturer and the number of the key.** In case of loss of the keys, please refer to an authorised Bosch eBike dealer. Please provide the name of the manufacturer and the number of the key.
- **Do not apply any cleaning agents, paint or chemicals to any components of the Bosch drive system as they may cause premature failure of the component.**

When changing the bulbs, ensure that they are compatible with **the smart system** generation of Bosch systems (ask at a service center) and are suitable for the specified voltage. Bulbs must only be replaced with bulbs of the same voltage.

All components fitted to the drive unit and all other components of the drive (e.g. chainring, chainring receptacle, crank, cassette) must only be replaced with identical components or components that have been specifically approved by the manufacturer for your eBike. This will protect the drive unit from overloading and becoming damaged.

Keep the drive unit clean and avoid contact with aggressive substances and fuels, e.g. diesel. Take care when cleaning the drive unit.

If the area around the cadence sensor **(13)** becomes very dirty, this can prevent the drive from working properly. Keep the cadence sensor **(13)** and the sensor disc **(14)** clean.

Adjusting the cadence sensor

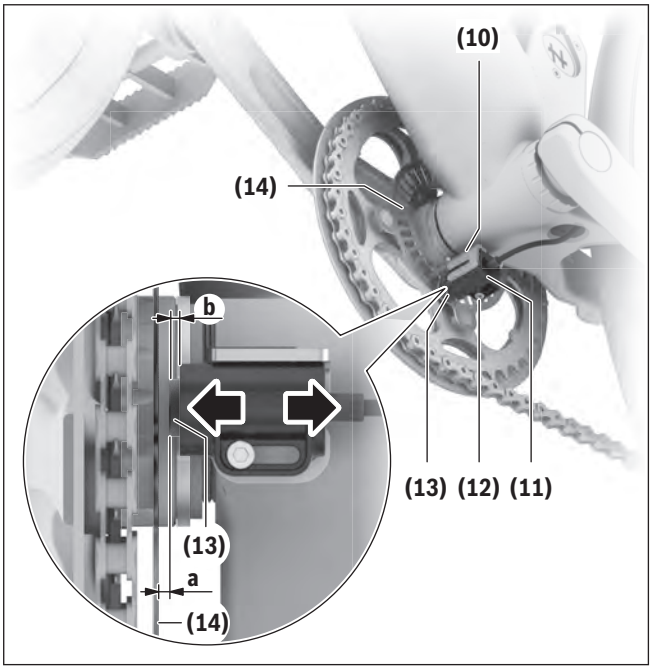

(10) Sensor holder
(11) Sensor sleeve
(12) M3×20 screw
(13) Cadence sensor
(14) Sensor disc

Incorrect spacing **a** between the cadence sensor **(13)** and the sensor disc **(14)** can prevent the drive from working properly.

The spacing **a** must be at least approx. 0.039 in (1 mm). If spacing is insufficient, the cadence sensor **(13)** could collide with the sensor disc **(14)** under the strain of pedaling.

The optimum spacing **a** is approx. 0.078 in (2 mm).

The spacing **a** must be no bigger than approx. 0.118 in (3 mm).

Note: Check if a different spacing is advised for your eBike by referring to the documents from the bicycle manufacturer.

The cadence sensor **(13)** plugs into the sensor sleeve **(11)**.

The sensor sleeve **(11)** is attached to the sensor holder **(10)** using the screw **(12)**.

To adjust the spacing **a**, first loosen the screw **(12)** using a 2.5 mm hex key. Then, push the sensor sleeve **(11)** together with the cadence sensor **(13)** into the correct position.

If required, the cadence sensor **(13)** can be pushed into the sensor sleeve **(11)**. When doing so, make sure that the cadence sensor **(13)** is pushed as deep into the sensor sleeve **(11)** as possible, and does not stick out by more than approx. 0.196 in (5 mm) **b**.

Then secure the cadence sensor **(13)** in place with the screw **(12)**. Observe the tightening torque of approx. 0.4 lb ft (0.5 Nm).

Cleaning

- **Do not submerge your eBike components in water, or wash with pressurized hose.** Your Bosch drive unit is designed to be water tight to rain water or non-pressure hose washing.

Keep all components of your eBike clean, especially the battery pack contacts and corresponding holder contacts. All components including the drive unit may not be immersed in water or cleaned with a high-pressure cleaner. Clean them carefully with a soft, damp cloth (using only mild soap and water).

Taking care of your eBike

Please observe the operating and storage temperatures of the eBike components. Protect the drive unit, display, and eBike battery against extreme temperatures (e.g. from intense sunlight without adequate ventilation). Extreme temperatures can cause the components (especially the eBike battery) to become damaged.

Have your eBike checked by an expert at least once a year (including mechanical parts, up-to-dateness of system software).

Please have your eBike serviced and repaired by a service center.

After-sales service and advice on using products

If you have any questions about the eBike and its components, contact a service center.

For contact details of service centers, please visit www.bosch-ebike.com.

More information



More information and videos about the eBike components and their functions can be found in the Bosch eBike Help Center.

Disposal



The individual eBike components as well as accessories and packaging should be recycled in an environmentally friendly manner.

Do not dispose of eBikes and their components with household waste.

Please return Bosch eBike components that are no longer usable, free of charge, to a specialist dealer or a recycling center.

Subject to change without notice.

Robert Bosch GmbH
72757 Reutlingen
Germany

www.bosch-ebike.com

kontakt@bosch.de

0 275 U07 3D6 (2026.02) T / 38

Drive Unit

BDU3142 | BDU3144



en Original operating instructions

This manual contains important safety, performance and service information. Read and understand it along with the information provided to you by your bicycle manufacturer before using the product, and keep it for reference.

Performance Line SX | Performance Line Sprint

263

Table of Contents

Introduction 2
About Warnings 2
General Warnings 2
Using your Manual 3
Operating your Bosch Drive Unit 4
Safety instructions 4
Product description and specifications 6
Assembly 7
Operation 8
Maintenance/Cleaning 9
Cleaning 10
Taking care of your eBike 10
After-sales service and advice on using products 10
More information 10
Disposal 10

Introduction

Some content is published under license from the **PeopleForBikes Coalition, LTD**.

About Warnings

This manual contains many **DANGER**, **WARNING** and **CAUTION** indicators concerning the consequences of failure to use, assemble, maintain, store, inspect and dispose of a Bosch-equipped eBike in a safe manner.

– The combination of the safety alert symbol and the word **DANGER** indicates a hazardous situation that, if not avoided, will result in death or serious injury.
– The combination of the safety alert symbol and the word **WARNING** indicates a hazardous situation that, if not avoided, could result in death or serious injury.
– The combination of the safety alert symbol and the word **CAUTION** indicates a hazardous situation that, if not avoided, could result in minor or moderate injury.

General Warnings



Read all safety warnings and all instructions. Failure to follow the warnings and instructions may result in death, property damage or serious injury.

Save all safety warnings and instructions for future reference.

The term **eBike battery** used in these operating instructions refers to all original Bosch eBike batteries from the system generation **the smart system**.

▶ **Read ALL accompanying manuals before riding the bike for the first time.** Your Bosch Drive System comes with additional manuals and documents provided by the manufacturer of the bicycle and other components. Failure to read and understand safety information can result in death or serious injury.

⚠ WARNING

▶ **This manual contains important safety, performance and service information.** Read it before you take the first ride on your new bicycle, and keep it for reference. The manual can also be found online at www.bosch-ebike.com.

▶ **This manual is intended to be read together with the separate user manual provided with your bicycle.** Be sure to read all provided documents including labels on the product before your first ride.

▶ **Take responsibility for your own SAFETY.** If you have any questions or do not understand something, consult with your dealer or the bicycle or component manufacturer.

▶ **Some eBike accessories may present a choking hazard to small children.** Keep these accessories away from children.

⚠ CAUTION

▶ **The Bosch Drive System adds weight to your bicycle which you may not be used to lift.** Avoid injury, use proper lifting techniques.

Using your Manual

In addition to the functions outlined here, changes to software relating to troubleshooting and functional modifications may be introduced at any time.

Graphics

The bicycle shown in this manual may differ slightly from your bicycle, but will be similar enough to help you understand our instructions.

RIGHT-HAND and LEFT-HAND sides are determined by facing in the direction the bicycle will travel when going forward. When you see a broken line (------), the item referred to is hidden from view.

Operating your Bosch Drive Unit

Safety instructions



Read and understand all safety warnings and instructions. Failure to follow the below warnings could result in death or serious injury.

Save all safety warnings and instructions for future reference.

The term **eBike battery** used in these operating instructions refers to all original Bosch eBike batteries from the system generation **the smart system**.

The terms **drive** and **drive unit** used in these operating instructions refer to all original Bosch drive units from the system generation **the smart system**.

- ▸ **Read and observe the safety warnings and instructions in all operating instructions of the eBike components and your eBike.**
- ▸ **It is recommended that you periodically review this information to ensure you are following all recommendations for safe use of this product.**
- ▸ **Do not make any kind of modifications to the drive. Do not use any products to increase the performance and/or top speed of the eBike.** Modifying an eBike to increase its performance or speed may be unlawful and can result in component failure or a loss of control, leading to a crash resulting in serious injury or death. A modified eBike may no longer be regulated as an eBike, placing the operator at risk of personal liability and criminal prosecution in the event of a crash. In addition, doing so will generally reduce the service life of the eBike components. The drive unit and eBike may be damaged and guarantee and warranty claims on the eBike you have purchased may consequently be voided.
- ▸ **Do not open the drive unit. The drive unit must be repaired using only original spare parts and only by an authorized bicycle retailer.** This will ensure that the eBike remains safe to use. Unauthorized opening of the drive unit may render warranty claims null and void.
- ▸ **Remove the eBike battery from the eBike before beginning work (e.g. inspection, repair, assembly, maintenance, work on the chain, etc.) on the eBike. When working on permanently installed eBike batteries, take particular care to ensure that the eBike cannot be switched on.** Unintentional activation of the eBike poses a risk of injury.
- ▸ **The eBike can be switched on by pushing the eBike backwards or by turning the pedals backwards.**
- ▸ **You must not remove built-in eBike batteries yourself. Have a service center install and remove built-in eBike batteries for you.**



Under extreme conditions, such as continuously high loads at low speed when riding up hills or carrying loads, parts of the drive unit can reach temperatures in excess of 140 °F (60 °C).

- ▸ **After a ride, do not allow your unprotected hands or legs to come into contact with the housing of the drive unit.** Under extreme conditions, such as continuously high torques at low travel speeds, or when riding up hills or carrying loads, very high temperatures may be reached on the housing. Contact with hot components can result in burns if touched.

  The temperatures that may be reached on the drive unit housing are influenced by the following factors:
  – Ambient temperature
  – Ride profile (route/gradient)
  – Ride duration
  – Riding modes
  – User behavior (personal effort)
  – Total weight (rider, eBike, luggage)

– Motor cover on the drive unit
– Heat dissipation properties of the bicycle frame
– Type of drive unit and type of gear-shifting

▶ **Use only original Bosch eBike batteries from the system generation the smart system that the manufacturer has approved for your eBike.** Using other eBike batteries can lead to injuries and pose a fire hazard. Bosch accepts no liability if other eBike batteries are used.

Safety instructions for the rim magnet

The following safety instructions must be observed when handling the rim magnet:

▶ **Warning of very strong magnetic fields: The rim magnet generates a very strong magnetic field that may influence the magnetic storage media (e.g. credit card) and electronic devices (e.g. clock). There is a risk of data loss and damage to devices.** Do not move any media or devices sensitive to magnetic fields into the immediate vicinity of the rim magnet.

▶ **Warning of hand injuries caused by parts attracted to the magnet: There is a risk of injury if your fingers or hands get caught between the magnet and the objects attracted to it. This may cause skin injuries (e.g. if metal chips are attracted), crushing injuries, contusions or fractures.** You can avoid these by being vigilant and wearing suitable protective clothing.

▶ **Danger to persons with implants and other medical devices, e.g. pacemakers, defribrillators or insulin pumps:**
Keep these away from the immediate vicinity of the rim magnet.

– The magnet generates a field that can impair the function of implants and medical devices.
– To avoid impairments, the rim magnet should not be held directly in front of the chest.
– A minimum distance of approx. 11.8 in (30 cm) to the chest should be maintained.

▶ **Observe all national regulations which set out the approved use of eBikes.**

▶ **Please observe all local, state and federal regulations when registering and using eBikes.**

Privacy notice

When connecting the eBike to the **Bosch DiagnosticTool 3** or when exchanging eBike components, technical information about your eBike (e.g. bicycle manufacturer, model, bike ID, configuration data) as well as regarding the use of the eBike (e.g. total travel time, energy consumption, temperature) is transmitted to Bosch eBike Systems (Robert Bosch GmbH) for processing your request, in service cases and for the purposes of product improvement. You can find further information about data processing at www.bosch-ebike.com/privacy-full.

Product description and specifications

Intended use

The Bosch drive unit from the system generation **the smart system** is intended exclusively for driving your eBike and must not be used for any other purpose.

In addition to the functions outlined here, changes to software relating to troubleshooting and functional modifications may be introduced at any time.

Technical data

Drive unit		**Drive Unit Performance Line SX Performance Line Sprint**
Product code		BDU3142 BDU3144
Continuous rated power	W	250
Max. torque	lb ft Nm	44 60
Rated voltage	V	36
Operating temperature	°F °C	+23 to +104 −5 to +40
Storage temperature	°F °C	+50 to +104 +10 to +40
Protection rating		IP55
Weight, approx.	lbs kg	4.4 2.0

Bosch eBike Systems uses FreeRTOS (see www.freertos.org).

Bicycle lights[A)]		
Voltage approx.	V	12
Maximum power	W	18

A) Depends on legal regulations, not possible in all country-specific models via the eBike battery

Inserting a bulb incorrectly can cause it to blow.

Details on noise emissions on the drive unit

The A-rated emission sound pressure level for the drive unit is < 70 dB(A) in standard operating mode. If the eBike is moved without authorization, the drive unit generates an alarm tone as a key feature of the **<eBike Alarm>** service. This alarm tone can exceed a noise emission level of 70 dB(A) and measures 80 dB(A) at a distance of approx. 6.6 ft (2 m) from the drive unit. The alarm tone is only available once the **<eBike Alarm>** service has been activated and can be deactivated via the **eBike Flow** app.

Assembly

Checking the speed sensor (see figure A)

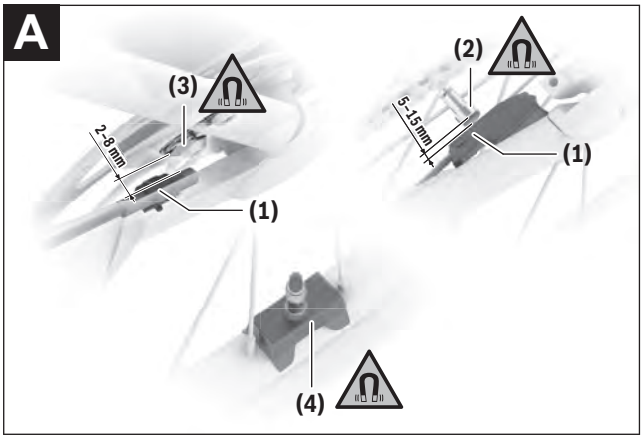

(1) Speed sensor [a)]
(2) Spoke magnet
(3) CenterLock magnet [b)]
(4) Rim magnet

a) Different sensor shape and installation position possible
b) a different installation position is possible

Speed Sensor (slim)

The speed sensor (slim) **(1)** and its CenterLock magnet **(3)** or spoke magnet **(2)** must be fitted ex works such that the magnet moves past the speed sensor at a distance of at least approx. 0.08 in (2 mm) and at most approx. 0.6 in (15 mm) with each rotation of the wheel.

The correct distance between the magnet and sensor must be maintained (see figure **A**) if design changes are made.

Notes: Ensure that you do not damage the sensor or sensor bracket when fitting or removing the rear wheel.

When changing a wheel, make sure that the sensor cable is routed so that it is not under tension and has no kinks.

The CenterLock magnet **(3)** can only be removed and reinserted up to five times.

Rim magnet



Warning of hand injuries caused by parts attracted to the magnet: There is a risk of injury if your fingers or hands get caught between the magnet and the objects attracted to it. This may cause skin injuries (e.g. if metal chips are attracted), crushing injuries, contusions or fractures. You can avoid these by being vigilant and wearing suitable protective clothing.

Note: The rim magnet's alignment with the rim must not be changed (see figure **A**).

If a rim magnet is installed, no sensor is required to detect a wheel turn. The drive unit itself detects when the magnet is close to it and calculates the speed and any other data required from the frequency of the emergence of the magnetic field.

Since the drive unit is sensitive to magnetic fields, avoid other magnetic fields in the vicinity of the drive unit (e.g. magnetic clipless pedals, magnetic cadence sensors, magnetic or magnetized tools, etc.) in order to prevent disruption to the drive unit.

Operation

Notes on cycling with your eBike

Note: The eBike system **always** starts in **OFF** mode for drive units with a maximum speed of more than **20 mph (32 km/h)**.

When does the drive take effect?

The drive assists your cycling only when you are pedaling. If you do not pedal, the assistance will not work. The drive output always depends on the pedaling force and cadence that you apply.

If you apply less force or a lower cadence, you will receive less assistance than if you apply a lot of force or a higher cadence. This applies irrespective of the riding mode.

The drive automatically switches off at speeds over **20/28 mph (32/45 km/h)**. When the speed falls below **20/28 mph (32/45 km/h)**, the drive automatically becomes available again.

An exception applies to the walk assistance function, in which the eBike can be pushed at low speed without pedaling. The pedals may rotate when walk assistance is in use.

You can also use the eBike as a normal bicycle without assistance at any time, either by switching off the eBike or by setting the riding mode to **OFF**. The same applies when the eBike battery is drained.

Interaction of the drive unit with the gear-shifting

You should shift through gears on an eBike in the same manner as when using a normal bicycle (observe the operating instructions of your eBike with regard to this point).

Irrespective of the type of gear shifting, it is advisable that you briefly reduce the pressure on the pedals when changing gear. This will aid gear shifting and reduce wear on the powertrain.

By selecting the correct gear, you can increase your speed and range while applying the same amount of force.

Gaining initial experience

We recommend that you gain initial experience with the eBike away from busy roads.

Test the various riding modes. Start in a riding mode with a small amount of assistance. As soon as you feel confident, you can ride your eBike in traffic like any other bicycle.

Test the range of your eBike in different conditions before planning longer and more demanding trips.

Influences on range

It is not possible to calculate the range accurately before and during a trip because the range is affected by a number of factors.

Enter the factors in the Range Assistant in order to better assess the effects on the range.


Scan the code provided to open the Range Assistant.

Maintenance/Cleaning

⚠ WARNING

- **Do not open any of the components. Service should only be carried out at an authorized Bosch eBike dealer.** Failure to follow above warning can cause death or serious injury. Refer to your bicycle manual or component manual for all non-Bosch drive system components.
- **Always remove the battery pack before performing any bicycle inspection, maintenance or repair.** Failure to remove the battery pack before performing bicycle inspection, maintenance or repair can lead to serious injury.
- **If you suspect that something is loose, do not ride your bike.** See your Bosch eBike dealer, only a qualified service provider should perform work on your Bosch Drive System. All nuts, bolts, screws require the correct tightening force. Too little force and the fastener may not hold securely. Too much force and the fastener can strip threads, stretch, deform or break. Either way, incorrect tightening force can result in component failure, which can cause you to lose control and fall.
- **If replacing your battery, buy only a genuine Bosch battery pack from an approved source. See your Bosch eBike dealer for original Bosch parts.**
- **Always switch the battery pack off, when inserting or removing it from the holder.** Never attempt to insert or remove the battery pack while riding the bike.
- **Do not charge or use your eBike in any area with a potentially explosive atmosphere, such as at a fueling area, or in areas where the air contains chemicals or particles (such as grain, dust, or metal powders).** Obey all signs and instructions.
- **Do not submerge your eBike components in water, or wash with pressurized hose.** Your Bosch drive unit is designed to be water tight to rain water or non-pressure hose washing.
- **Note down the manufacturer and the number of the key.** In case of loss of the keys, please refer to an authorised Bosch eBike dealer. Please provide the name of the manufacturer and the number of the key.
- **Do not apply any cleaning agents, paint or chemicals to any components of the Bosch drive system as they may cause premature failure of the component.**

When changing the bulbs, ensure that they are compatible with **the smart system** generation of Bosch systems (ask at a service center) and are suitable for the specified voltage. Bulbs must only be replaced with bulbs of the same voltage.

All components fitted to the drive unit and all other components of the drive (e.g. chainring, chainring receptacle, pedals, cranks) must only be replaced with identical components or components that have been specifically approved by the manufacturer for your eBike. This will protect the drive unit from overloading and becoming damaged.

Keep the drive unit clean and avoid contact with aggressive substances and fuels, e.g. diesel. Take care when cleaning the drive unit.

Cleaning

▸ **Do not submerge your eBike components in water, or wash with pressurized hose.** Your Bosch drive unit is designed to be water tight to rain water or non-pressure hose washing.

Keep all components of your eBike clean, especially the battery pack contacts and corresponding holder contacts. All components including the drive unit may not be immersed in water or cleaned with a high-pressure cleaner. Clean them carefully with a soft, damp cloth (using only mild soap and water).

Taking care of your eBike

Please observe the operating and storage temperatures of the eBike components. Protect the drive unit, display, and eBike battery against extreme temperatures (e.g. from intense sunlight without adequate ventilation). Extreme temperatures can cause the components (especially the eBike battery) to become damaged.

Have your eBike checked by an expert at least once a year (including mechanical parts, up-to-dateness of system software).

Please have your eBike serviced and repaired by a service center.

After-sales service and advice on using products

If you have any questions about the eBike and its components, contact a service center.

For contact details of service centers, please visit www.bosch-ebike.com.

More information



More information and videos about the eBike components and their functions can be found in the Bosch eBike Help Center.

Disposal



The individual eBike components as well as accessories and packaging should be recycled in an environmentally friendly manner.

Do not dispose of eBikes and their components with household waste.

Please return Bosch eBike components that are no longer usable, free of charge, to a specialist dealer or a recycling center.

Subject to change without notice.

Robert Bosch GmbH
72757 Reutlingen
Germany

www.bosch-ebike.com

kontakt@bosch.de

0 275 U07 3D3 (2026.02) T / 32

Drive Unit

BDU3320 | BDU3340 | BDU3360 | BDU3380



en Original operating instructions

This manual contains important safety, performance and service information. Read and understand it along with the information provided to you by your bicycle manufacturer before using the product, and keep it for reference.

Active Line | Active Line Plus | Performance Line | Performance Line Sport

277

Table of Contents

Introduction 2
About Warnings 2
General Warnings 2
Using your Manual 3
Operating your Bosch Drive Unit 4
Safety instructions 4
Product description and specifications 6
Assembly 7
Operation 8
Maintenance/Cleaning 9
Cleaning 10
Taking care of your eBike 10
After-sales service and advice on using products 10
More information 10
Disposal 10

Introduction

Some content is published under license from the **PeopleForBikes Coalition, LTD**.

About Warnings

This manual contains many **DANGER**, **WARNING** and **CAUTION** indicators concerning the consequences of failure to use, assemble, maintain, store, inspect and dispose of a Bosch-equipped eBike in a safe manner.

– The combination of the safety alert symbol and the word **DANGER** indicates a hazardous situation that, if not avoided, will result in death or serious injury.
– The combination of the safety alert symbol and the word **WARNING** indicates a hazardous situation that, if not avoided, could result in death or serious injury.
– The combination of the safety alert symbol and the word **CAUTION** indicates a hazardous situation that, if not avoided, could result in minor or moderate injury.

General Warnings



Read all safety warnings and all instructions. Failure to follow the warnings and instructions may result in death, property damage or serious injury.

Save all safety warnings and instructions for future reference.

The term **eBike battery** used in these operating instructions refers to all original Bosch eBike batteries from the system generation **the smart system**.

▶ **Read ALL accompanying manuals before riding the bike for the first time.** Your Bosch Drive System comes with additional manuals and documents provided by the manufacturer of the bicycle and other components. Failure to read and understand safety information can result in death or serious injury.

⚠ WARNING

▶ **This manual contains important safety, performance and service information.** Read it before you take the first ride on your new bicycle, and keep it for reference. The manual can also be found online at www.bosch-ebike.com.

▶ **This manual is intended to be read together with the separate user manual provided with your bicycle.** Be sure to read all provided documents including labels on the product before your first ride.

▶ **Take responsibility for your own SAFETY.** If you have any questions or do not understand something, consult with your dealer or the bicycle or component manufacturer.

▶ **Some eBike accessories may present a choking hazard to small children.** Keep these accessories away from children.

⚠ CAUTION

▶ **The Bosch Drive System adds weight to your bicycle which you may not be used to lift.** Avoid injury, use proper lifting techniques.

Using your Manual

In addition to the functions outlined here, changes to software relating to troubleshooting and functional modifications may be introduced at any time.

Graphics

The bicycle shown in this manual may differ slightly from your bicycle, but will be similar enough to help you understand our instructions.

RIGHT-HAND and LEFT-HAND sides are determined by facing in the direction the bicycle will travel when going forward. When you see a broken line (------), the item referred to is hidden from view.

Operating your Bosch Drive Unit

Safety instructions



Read and understand all safety warnings and instructions. Failure to follow the below warnings could result in death or serious injury.

Save all safety warnings and instructions for future reference.

The term **eBike battery** used in these operating instructions refers to all original Bosch eBike batteries from the system generation **the smart system**.

The terms **drive** and **drive unit** used in these operating instructions refer to all original Bosch drive units from the system generation **the smart system**.

- ▸ **Read and observe the safety warnings and instructions in all operating instructions of the eBike components and your eBike.**
- ▸ **It is recommended that you periodically review this information to ensure you are following all recommendations for safe use of this product.**
- ▸ **Do not make any kind of modifications to the drive. Do not use any products to increase the performance and/or top speed of the eBike.** Modifying an eBike to increase its performance or speed may be unlawful and can result in component failure or a loss of control, leading to a crash resulting in serious injury or death. A modified eBike may no longer be regulated as an eBike, placing the operator at risk of personal liability and criminal prosecution in the event of a crash. In addition, doing so will generally reduce the service life of the eBike components. The drive unit and eBike may be damaged and guarantee and warranty claims on the eBike you have purchased may consequently be voided.
- ▸ **Do not open the drive unit. The drive unit must be repaired using only original spare parts and only by an authorized bicycle retailer.** This will ensure that the eBike remains safe to use. Unauthorized opening of the drive unit may render warranty claims null and void.
- ▸ **Remove the eBike battery from the eBike before beginning work (e.g. inspection, repair, assembly, maintenance, work on the chain, etc.) on the eBike. When working on permanently installed eBike batteries, take particular care to ensure that the eBike cannot be switched on.** Unintentional activation of the eBike poses a risk of injury.
- ▸ **The eBike can be switched on by pushing the eBike backwards or by turning the pedals backwards.**
- ▸ **You must not remove built-in eBike batteries yourself. Have a service center install and remove built-in eBike batteries for you.**



Under extreme conditions, such as continuously high loads at low speed when riding up hills or carrying loads, parts of the drive unit can reach temperatures in excess of 140 °F (60 °C).

- ▸ **After a ride, do not allow your unprotected hands or legs to come into contact with the housing of the drive unit.** Under extreme conditions, such as continuously high torques at low travel speeds, or when riding up hills or carrying loads, very high temperatures may be reached on the housing. Contact with hot components can result in burns if touched.

  The temperatures that may be reached on the drive unit housing are influenced by the following factors:
  – Ambient temperature
  – Ride profile (route/gradient)
  – Ride duration
  – Riding modes
  – User behavior (personal effort)
  – Total weight (rider, eBike, luggage)

– Motor cover on the drive unit
– Heat dissipation properties of the bicycle frame
– Type of drive unit and type of gear-shifting

▶ **Use only original Bosch eBike batteries from the system generation the smart system that the manufacturer has approved for your eBike.** Using other eBike batteries can lead to injuries and pose a fire hazard. Bosch accepts no liability if other eBike batteries are used.

Safety instructions for the rim magnet

The following safety instructions must be observed when handling the rim magnet:

▶ **Warning of very strong magnetic fields: The rim magnet generates a very strong magnetic field that may influence the magnetic storage media (e.g. credit card) and electronic devices (e.g. clock). There is a risk of data loss and damage to devices.** Do not move any media or devices sensitive to magnetic fields into the immediate vicinity of the rim magnet.

▶ **Warning of hand injuries caused by parts attracted to the magnet: There is a risk of injury if your fingers or hands get caught between the magnet and the objects attracted to it. This may cause skin injuries (e.g. if metal chips are attracted), crushing injuries, contusions or fractures.** You can avoid these by being vigilant and wearing suitable protective clothing.

▶ **Danger to persons with implants and other medical devices, e.g. pacemakers, defribrillators or insulin pumps:**
Keep these away from the immediate vicinity of the rim magnet.

– The magnet generates a field that can impair the function of implants and medical devices.
– To avoid impairments, the rim magnet should not be held directly in front of the chest.
– A minimum distance of approx. 11.8 in (30 cm) to the chest should be maintained.

▶ **Observe all national regulations which set out the approved use of eBikes.**

▶ **Please observe all local, state and federal regulations when registering and using eBikes.**

Privacy notice

When connecting the eBike to the **Bosch DiagnosticTool 3** or when exchanging eBike components, technical information about your eBike (e.g. bicycle manufacturer, model, bike ID, configuration data) as well as regarding the use of the eBike (e.g. total travel time, energy consumption, temperature) is transmitted to Bosch eBike Systems (Robert Bosch GmbH) for processing your request, in service cases and for the purposes of product improvement. You can find further information about data processing at www.bosch-ebike.com/privacy-full.

Product description and specifications

Intended use

The Bosch drive unit from the system generation **the smart system** is intended exclusively for driving your eBike and must not be used for any other purpose.

In addition to the functions outlined here, changes to software relating to troubleshooting and functional modifications may be introduced at any time.

Technical data

Drive unit		Drive Unit Active Line	Drive Unit Active Line Plus	Drive Unit Performance Line/ Performance Line Sport
Product code		BDU3320	BDU3340	BDU3360 BDU3380
Continuous rated power	W	250	250	250
Max. torque	lb ft Nm	29 40	37 50	55 75
Rated voltage	V	36	36	36
Operating temperature	°F °C	+23 to +104 −5 to +40	+23 to +104 −5 to +40	+23 to +104 −5 to +40
Storage temperature	°F °C	+50 to +104 +10 to +40	+50 to +104 +10 to +40	+50 to +104 +10 to +40
Protection rating		IP55	IP55	IP55
Weight, approx.	lbs kg	6.4 2.9	7.05 3.2	7.05 3.2

Bosch eBike Systems uses FreeRTOS (see www.freertos.org).

Bicycle lights[A)]		
Voltage approx.	V	12
Maximum power	W	18

A) Depends on legal regulations, not possible in all country-specific models via the eBike battery

Inserting a bulb incorrectly can cause it to blow.

Details on noise emissions on the drive unit

The A-rated emission sound pressure level for the drive unit is < 70 dB(A) in standard operating mode. If the eBike is moved without authorization, the drive unit generates an alarm tone as a key feature of the **<eBike Alarm>** service. This alarm tone can exceed a noise emission level of 70 dB(A) and measures 80 dB(A) at a distance of approx. 6.6 ft (2 m) from the drive unit. The alarm tone is only available once the **<eBike Alarm>** service has been activated and can be deactivated via the **eBike Flow** app.

Assembly

Checking the speed sensor (see figure A)

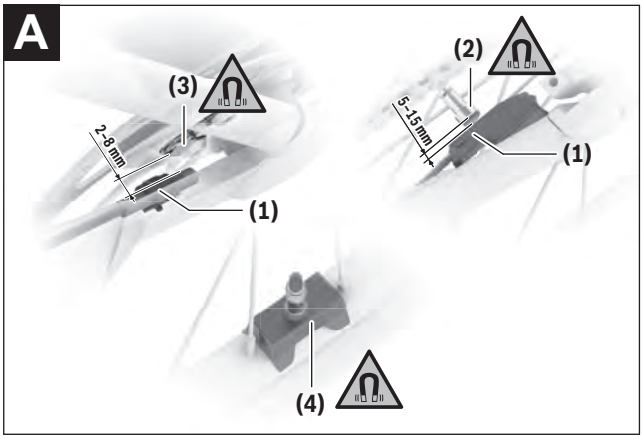

(1) Speed sensor [a)]
(2) Spoke magnet
(3) CenterLock magnet [b)]
(4) Rim magnet

a) Different sensor shape and installation position possible
b) a different installation position is possible

Speed Sensor (slim)

The speed sensor (slim) **(1)** and its CenterLock magnet **(3)** or spoke magnet **(2)** must be fitted ex works such that the magnet moves past the speed sensor at a distance of at least approx. 0.08 in (2 mm) and at most approx. 0.6 in (15 mm) with each rotation of the wheel.

The correct distance between the magnet and sensor must be maintained (see figure **A**) if design changes are made.

Notes: Ensure that you do not damage the sensor or sensor bracket when fitting or removing the rear wheel.

When changing a wheel, make sure that the sensor cable is routed so that it is not under tension and has no kinks.

The CenterLock magnet **(3)** can only be removed and reinserted up to five times.

Rim magnet



Warning of hand injuries caused by parts attracted to the magnet: There is a risk of injury if your fingers or hands get caught between the magnet and the objects attracted to it. This may cause skin injuries (e.g. if metal chips are attracted), crushing injuries, contusions or fractures. You can avoid these by being vigilant and wearing suitable protective clothing.

Note: The rim magnet's alignment with the rim must not be changed (see figure **A**).

If a rim magnet is installed, no sensor is required to detect a wheel turn. The drive unit itself detects when the magnet is close to it and calculates the speed and any other data required from the frequency of the emergence of the magnetic field.

Since the drive unit is sensitive to magnetic fields, avoid other magnetic fields in the vicinity of the drive unit (e.g. magnetic clipless pedals, magnetic cadence sensors, magnetic or magnetized tools, etc.) in order to prevent disruption to the drive unit.

Operation

A control unit from the system generation **the smart system** is required for starting operation of the eBike. Observe the operating instructions for the control unit and additional components from the system generation **the smart system** where necessary.

Notes on cycling with your eBike

When does the drive take effect?

The drive assists your cycling only when you are pedaling. If you do not pedal, the assistance will not work. The drive output always depends on the pedaling force and cadence that you apply.

If you apply less force or a lower cadence, you will receive less assistance than if you apply a lot of force or a higher cadence. This applies irrespective of the riding mode.

The drive automatically switches off at speeds over **20/28 mph (32/45 km/h)**. When the speed falls below **20/28 mph (32/45 km/h)**, the drive automatically becomes available again.

An exception applies to the walk assistance function, in which the eBike can be pushed at low speed without pedaling. The pedals may rotate when walk assistance is in use.

You can also use the eBike as a normal bicycle without assistance at any time, either by switching off the eBike or by setting the riding mode to **OFF**. The same applies when the eBike battery is drained.

Interaction of the drive unit with the gear-shifting

You should shift through gears on an eBike in the same manner as when using a normal bicycle (observe the operating instructions of your eBike with regard to this point).

Irrespective of the type of gear shifting, it is advisable that you briefly reduce the pressure on the pedals when changing gear. This will aid gear shifting and reduce wear on the powertrain.

By selecting the correct gear, you can increase your speed and range while applying the same amount of force.

Gaining initial experience

We recommend that you gain initial experience with the eBike away from busy roads.

Test the various riding modes. Start in a riding mode with a small amount of assistance. As soon as you feel confident, you can ride your eBike in traffic like any other bicycle.

Test the range of your eBike in different conditions before planning longer and more demanding trips.

Influences on range

It is not possible to calculate the range accurately before and during a trip because the range is affected by a number of factors.

Enter the factors in the Range Assistant in order to better assess the effects on the range.


Scan the code provided to open the Range Assistant.

Maintenance/Cleaning

⚠ WARNING

- **Do not open any of the components. Service should only be carried out at an authorized Bosch eBike dealer.** Failure to follow above warning can cause death or serious injury. Refer to your bicycle manual or component manual for all non-Bosch drive system components.
- **Always remove the battery pack before performing any bicycle inspection, maintenance or repair.** Failure to remove the battery pack before performing bicycle inspection, maintenance or repair can lead to serious injury.
- **If you suspect that something is loose, do not ride your bike.** See your Bosch eBike dealer, only a qualified service provider should perform work on your Bosch Drive System. All nuts, bolts, screws require the correct tightening force. Too little force and the fastener may not hold securely. Too much force and the fastener can strip threads, stretch, deform or break. Either way, incorrect tightening force can result in component failure, which can cause you to lose control and fall.
- **If replacing your battery, buy only a genuine Bosch battery pack from an approved source. See your Bosch eBike dealer for original Bosch parts.**
- **Always switch the battery pack off, when inserting or removing it from the holder.** Never attempt to insert or remove the battery pack while riding the bike.
- **Do not charge or use your eBike in any area with a potentially explosive atmosphere, such as at a fueling area, or in areas where the air contains chemicals or particles (such as grain, dust, or metal powders).** Obey all signs and instructions.
- **Do not submerge your eBike components in water, or wash with pressurized hose.** Your Bosch drive unit is designed to be water tight to rain water or non-pressure hose washing.
- **Note down the manufacturer and the number of the key.** In case of loss of the keys, please refer to an authorised Bosch eBike dealer. Please provide the name of the manufacturer and the number of the key.
- **Do not apply any cleaning agents, paint or chemicals to any components of the Bosch drive system as they may cause premature failure of the component.**

When changing the bulbs, ensure that they are compatible with **the smart system** generation of Bosch systems (ask at a service center) and are suitable for the specified voltage. Bulbs must only be replaced with bulbs of the same voltage.

All components fitted to the drive unit and all other components of the drive (e.g. chainring, chainring receptacle, pedals, cranks) must only be replaced with identical components or components that have been specifically approved by the manufacturer for your eBike. This will protect the drive unit from overloading and becoming damaged.

Keep the drive unit clean and avoid contact with aggressive substances and fuels, e.g. diesel. Take care when cleaning the drive unit.

Cleaning

- **Do not submerge your eBike components in water, or wash with pressurized hose.** Your Bosch drive unit is designed to be water tight to rain water or non-pressure hose washing.

Keep all components of your eBike clean, especially the battery pack contacts and corresponding holder contacts. All components including the drive unit may not be immersed in water or cleaned with a high-pressure cleaner. Clean them carefully with a soft, damp cloth (using only mild soap and water).

Taking care of your eBike

Please observe the operating and storage temperatures of the eBike components. Protect the drive unit, display, and eBike battery against extreme temperatures (e.g. from intense sunlight without adequate ventilation). Extreme temperatures can cause the components (especially the eBike battery) to become damaged.

Have your eBike checked by an expert at least once a year (including mechanical parts, up-to-dateness of system software).

Please have your eBike serviced and repaired by a service center.

After-sales service and advice on using products

If you have any questions about the eBike and its components, contact a service center.

For contact details of service centers, please visit www.bosch-ebike.com.

More information



More information and videos about the eBike components and their functions can be found in the Bosch eBike Help Center.

Disposal



The individual eBike components as well as accessories and packaging should be recycled in an environmentally friendly manner.

Do not dispose of eBikes and their components with household waste.

Please return Bosch eBike components that are no longer usable, free of charge, to a specialist dealer or a recycling center.

Subject to change without notice.

Robert Bosch GmbH
72757 Reutlingen
Germany

www.bosch-ebike.com

kontakt@bosch.de

0 275 U07 3D2 (2026.03) T / 32

Active Line | Active Line Plus | Performance Line | Performance Line Sport

Drive Unit

BDU3440 | BDU3443 | BDU3460 | BDU3463 | BDU3470 | BDU3473



en Original operating instructions

This manual contains important safety, performance and service information. Read and understand it along with the information provided to you by your bicycle manufacturer before using the product, and keep it for reference.

Active Line Plus | Performance Line | Performance Line PX | Performance Line Sport

291

Table of Contents

Introduction 2
About Warnings 2
General Warnings 2
Using your Manual 3
Operating your Bosch Drive Unit 4
Safety instructions 4
Product description and specifications 6
Assembly 7
Operation 8
Maintenance/Cleaning 9
Cleaning 10
Taking care of your eBike 10
After-sales service and advice on using products 10
More information 10
Disposal 10

Introduction

Some content is published under license from the **PeopleForBikes Coalition, LTD**.

About Warnings

This manual contains many **DANGER**, **WARNING** and **CAUTION** indicators concerning the consequences of failure to use, assemble, maintain, store, inspect and dispose of a Bosch-equipped eBike in a safe manner.

– The combination of the safety alert symbol and the word **DANGER** indicates a hazardous situation that, if not avoided, will result in death or serious injury.
– The combination of the safety alert symbol and the word **WARNING** indicates a hazardous situation that, if not avoided, could result in death or serious injury.
– The combination of the safety alert symbol and the word **CAUTION** indicates a hazardous situation that, if not avoided, could result in minor or moderate injury.

General Warnings



Read all safety warnings and all instructions. Failure to follow the warnings and instructions may result in death, property damage or serious injury.

Save all safety warnings and instructions for future reference.

The term **eBike battery** used in these operating instructions refers to all original Bosch eBike batteries from the system generation **the smart system**.

▶ **Read ALL accompanying manuals before riding the bike for the first time.** Your Bosch Drive System comes with additional manuals and documents provided by the manufacturer of the bicycle and other components. Failure to read and understand safety information can result in death or serious injury.

⚠ WARNING

▶ **This manual contains important safety, performance and service information.** Read it before you take the first ride on your new bicycle, and keep it for reference. The manual can also be found online at www.bosch-ebike.com.

▶ **This manual is intended to be read together with the separate user manual provided with your bicycle.** Be sure to read all provided documents including labels on the product before your first ride.

▶ **Take responsibility for your own SAFETY.** If you have any questions or do not understand something, consult with your dealer or the bicycle or component manufacturer.

▶ **Some eBike accessories may present a choking hazard to small children.** Keep these accessories away from children.

⚠ CAUTION

▶ **The Bosch Drive System adds weight to your bicycle which you may not be used to lift.** Avoid injury, use proper lifting techniques.

Using your Manual

In addition to the functions outlined here, changes to software relating to troubleshooting and functional modifications may be introduced at any time.

Graphics

The bicycle shown in this manual may differ slightly from your bicycle, but will be similar enough to help you understand our instructions.

RIGHT-HAND and LEFT-HAND sides are determined by facing in the direction the bicycle will travel when going forward. When you see a broken line (------), the item referred to is hidden from view.

Operating your Bosch Drive Unit

Safety instructions



Read and understand all safety warnings and instructions. Failure to follow the below warnings could result in death or serious injury.

Save all safety warnings and instructions for future reference.

The term **eBike battery** used in these operating instructions refers to all original Bosch eBike batteries from the system generation **the smart system**.

The terms **drive** and **drive unit** used in these operating instructions refer to all original Bosch drive units from the system generation **the smart system**.

- ▸ **Read and observe the safety warnings and instructions in all operating instructions of the eBike components and your eBike.**
- ▸ **It is recommended that you periodically review this information to ensure you are following all recommendations for safe use of this product.**
- ▸ **Do not make any kind of modifications to the drive. Do not use any products to increase the performance and/or top speed of the eBike.** Modifying an eBike to increase its performance or speed may be unlawful and can result in component failure or a loss of control, leading to a crash resulting in serious injury or death. A modified eBike may no longer be regulated as an eBike, placing the operator at risk of personal liability and criminal prosecution in the event of a crash. In addition, doing so will generally reduce the service life of the eBike components. The drive unit and eBike may be damaged and guarantee and warranty claims on the eBike you have purchased may consequently be voided.
- ▸ **Do not open the drive unit. The drive unit must be repaired using only original spare parts and only by an authorized bicycle retailer.** This will ensure that the eBike remains safe to use. Unauthorized opening of the drive unit may render warranty claims null and void.
- ▸ **Remove the eBike battery from the eBike before beginning work (e.g. inspection, repair, assembly, maintenance, work on the chain, etc.) on the eBike. When working on permanently installed eBike batteries, take particular care to ensure that the eBike cannot be switched on.** Unintentional activation of the eBike poses a risk of injury.
- ▸ **The eBike can be switched on by pushing the eBike backwards or by turning the pedals backwards.**
- ▸ **You must not remove built-in eBike batteries yourself. Have a service center install and remove built-in eBike batteries for you.**



Under extreme conditions, such as continuously high loads at low speed when riding up hills or carrying loads, parts of the drive unit can reach temperatures in excess of 140 °F (60 °C).

- ▸ **After a ride, do not allow your unprotected hands or legs to come into contact with the housing of the drive unit.** Under extreme conditions, such as continuously high torques at low travel speeds, or when riding up hills or carrying loads, very high temperatures may be reached on the housing. Contact with hot components can result in burns if touched.

  The temperatures that may be reached on the drive unit housing are influenced by the following factors:
  – Ambient temperature
  – Ride profile (route/gradient)
  – Ride duration
  – Riding modes
  – User behavior (personal effort)
  – Total weight (rider, eBike, luggage)

– Motor cover on the drive unit
– Heat dissipation properties of the bicycle frame
– Type of drive unit and type of gear-shifting

▶ **Use only original Bosch eBike batteries from the system generation the smart system that the manufacturer has approved for your eBike.** Using other eBike batteries can lead to injuries and pose a fire hazard. Bosch accepts no liability if other eBike batteries are used.

Safety instructions for the rim magnet

The following safety instructions must be observed when handling the rim magnet:

▶ **Warning of very strong magnetic fields: The rim magnet generates a very strong magnetic field that may influence the magnetic storage media (e.g. credit card) and electronic devices (e.g. clock). There is a risk of data loss and damage to devices.** Do not move any media or devices sensitive to magnetic fields into the immediate vicinity of the rim magnet.

▶ **Warning of hand injuries caused by parts attracted to the magnet: There is a risk of injury if your fingers or hands get caught between the magnet and the objects attracted to it. This may cause skin injuries (e.g. if metal chips are attracted), crushing injuries, contusions or fractures.** You can avoid these by being vigilant and wearing suitable protective clothing.

▶ **Danger to persons with implants and other medical devices, e.g. pacemakers, defribrillators or insulin pumps:**
Keep these away from the immediate vicinity of the rim magnet.

– The magnet generates a field that can impair the function of implants and medical devices.
– To avoid impairments, the rim magnet should not be held directly in front of the chest.
– A minimum distance of approx. 11.8 in (30 cm) to the chest should be maintained.

▶ **Observe all national regulations which set out the approved use of eBikes.**

▶ **Please observe all local, state and federal regulations when registering and using eBikes.**

Privacy notice

When connecting the eBike to the **Bosch DiagnosticTool 3** or when exchanging eBike components, technical information about your eBike (e.g. bicycle manufacturer, model, bike ID, configuration data) as well as regarding the use of the eBike (e.g. total travel time, energy consumption, temperature) is transmitted to Bosch eBike Systems (Robert Bosch GmbH) for processing your request, in service cases and for the purposes of product improvement. You can find further information about data processing at www.bosch-ebike.com/privacy-full.

Product description and specifications

Intended use

The Bosch drive unit from the system generation **the smart system** is intended exclusively for driving your eBike and must not be used for any other purpose.

In addition to the functions outlined here, changes to software relating to troubleshooting and functional modifications may be introduced at any time.

Technical data

Drive unit		Drive Unit Active Line Plus	Drive Unit Performance Line	Drive Unit Performance Line PX Performance Line Sport
Product code		BDU3440 BDU3443	BDU3460 BDU3463	BDU3470 BDU3473
Continuous rated power	W	250	250	250
Max. torque	lb ft Nm	44 60	55 75	63[A)] 85[A)]
Rated voltage	V	36	36	36
Operating temperature	°F °C	+23 to +104 −5 to +40	+23 to +104 −5 to +40	+23 to +104 −5 to +40
Storage temperature	°F °C	+50 to +104 +10 to +40	+50 to +104 +10 to +40	+50 to +104 +10 to +40
Protection rating		IP55	IP55	IP55
Weight, approx.	lbs kg	5.9 2.7	6.2 2.8	6.4 2.9

A) You can change the preset value via the **eBike Flow** app. The maximum torque may vary depending on the bicycle manufacturer's specifications.

Bosch eBike Systems uses FreeRTOS (see www.freertos.org).

Bicycle lights[A)]		
Voltage approx.	V	12
Maximum power	W	18

A) Depends on legal regulations, not possible in all country-specific models via the eBike battery

Inserting a bulb incorrectly can cause it to blow.

Details on noise emissions on the drive unit

The A-rated emission sound pressure level for the drive unit is < 70 dB(A) in standard operating mode. If the eBike is moved without authorization, the drive unit generates an alarm tone as a key feature of the **<eBike Alarm>** service. This alarm tone can exceed a noise emission level of 70 dB(A) and measures 80 dB(A) at a distance of approx. 6.6 ft (2 m) from the drive unit. The alarm tone is only available once the **<eBike Alarm>** service has been activated and can be deactivated via the **eBike Flow** app.

Assembly

Checking the speed sensor (see figure A)

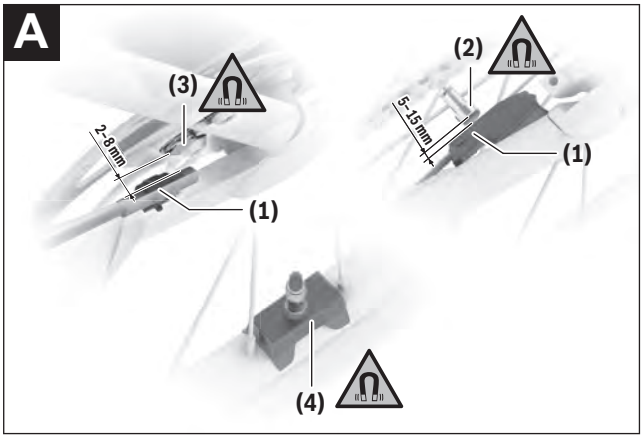

(1) Speed sensor [a)]
(2) Spoke magnet
(3) CenterLock magnet [b)]
(4) Rim magnet

a) Different sensor shape and installation position possible
b) a different installation position is possible

Speed Sensor (slim)

The speed sensor (slim) **(1)** and its CenterLock magnet **(3)** or spoke magnet **(2)** must be fitted ex works such that the magnet moves past the speed sensor at a distance of at least approx. 0.08 in (2 mm) and at most approx. 0.6 in (15 mm) with each rotation of the wheel.

The correct distance between the magnet and sensor must be maintained (see figure **A**) if design changes are made.

Notes: Ensure that you do not damage the sensor or sensor bracket when fitting or removing the rear wheel.

When changing a wheel, make sure that the sensor cable is routed so that it is not under tension and has no kinks.

The CenterLock magnet **(3)** can only be removed and reinserted up to five times.

Rim magnet



Warning of hand injuries caused by parts attracted to the magnet: There is a risk of injury if your fingers or hands get caught between the magnet and the objects attracted to it. This may cause skin injuries (e.g. if metal chips are attracted), crushing injuries, contusions or fractures. You can avoid these by being vigilant and wearing suitable protective clothing.

Note: The rim magnet's alignment with the rim must not be changed (see figure **A**).

If a rim magnet is installed, no sensor is required to detect a wheel turn. The drive unit itself detects when the magnet is close to it and calculates the speed and any other data required from the frequency of the emergence of the magnetic field.

Since the drive unit is sensitive to magnetic fields, avoid other magnetic fields in the vicinity of the drive unit (e.g. magnetic clipless pedals, magnetic cadence sensors, magnetic or magnetized tools, etc.) in order to prevent disruption to the drive unit.

Operation

A control unit from the system generation **the smart system** is required for starting operation of the eBike. Observe the operating instructions for the control unit and additional components from the system generation **the smart system** where necessary.

Notes on cycling with your eBike

When does the drive take effect?

The drive assists your cycling only when you are pedaling. If you do not pedal, the assistance will not work. The drive output always depends on the pedaling force and cadence that you apply.

If you apply less force or a lower cadence, you will receive less assistance than if you apply a lot of force or a higher cadence. This applies irrespective of the riding mode.

The drive automatically switches off at speeds over **20/28 mph (32/45 km/h)**. When the speed falls below **20/28 mph (32/45 km/h)**, the drive automatically becomes available again.

An exception applies to the walk assistance function, in which the eBike can be pushed at low speed without pedaling. The pedals may rotate when walk assistance is in use.

You can also use the eBike as a normal bicycle without assistance at any time, either by switching off the eBike or by setting the riding mode to **OFF**. The same applies when the eBike battery is drained.

Interaction of the drive unit with the gear-shifting

You should shift through gears on an eBike in the same manner as when using a normal bicycle (observe the operating instructions of your eBike with regard to this point).

Irrespective of the type of gear shifting, it is advisable that you briefly reduce the pressure on the pedals when changing gear. This will aid gear shifting and reduce wear on the powertrain.

By selecting the correct gear, you can increase your speed and range while applying the same amount of force.

Gaining initial experience

We recommend that you gain initial experience with the eBike away from busy roads.

Test the various riding modes. Start in a riding mode with a small amount of assistance. As soon as you feel confident, you can ride your eBike in traffic like any other bicycle.

Test the range of your eBike in different conditions before planning longer and more demanding trips.

Influences on range

It is not possible to calculate the range accurately before and during a trip because the range is affected by a number of factors.

Enter the factors in the Range Assistant in order to better assess the effects on the range.


Scan the code provided to open the Range Assistant.

Maintenance/Cleaning

⚠ WARNING

- **Do not open any of the components. Service should only be carried out at an authorized Bosch eBike dealer.** Failure to follow above warning can cause death or serious injury. Refer to your bicycle manual or component manual for all non-Bosch drive system components.
- **Always remove the battery pack before performing any bicycle inspection, maintenance or repair.** Failure to remove the battery pack before performing bicycle inspection, maintenance or repair can lead to serious injury.
- **If you suspect that something is loose, do not ride your bike.** See your Bosch eBike dealer, only a qualified service provider should perform work on your Bosch Drive System. All nuts, bolts, screws require the correct tightening force. Too little force and the fastener may not hold securely. Too much force and the fastener can strip threads, stretch, deform or break. Either way, incorrect tightening force can result in component failure, which can cause you to lose control and fall.
- **If replacing your battery, buy only a genuine Bosch battery pack from an approved source. See your Bosch eBike dealer for original Bosch parts.**
- **Always switch the battery pack off, when inserting or removing it from the holder.** Never attempt to insert or remove the battery pack while riding the bike.
- **Do not charge or use your eBike in any area with a potentially explosive atmosphere, such as at a fueling area, or in areas where the air contains chemicals or particles (such as grain, dust, or metal powders).** Obey all signs and instructions.
- **Do not submerge your eBike components in water, or wash with pressurized hose.** Your Bosch drive unit is designed to be water tight to rain water or non-pressure hose washing.
- **Note down the manufacturer and the number of the key.** In case of loss of the keys, please refer to an authorised Bosch eBike dealer. Please provide the name of the manufacturer and the number of the key.
- **Do not apply any cleaning agents, paint or chemicals to any components of the Bosch drive system as they may cause premature failure of the component.**

When changing the bulbs, ensure that they are compatible with **the smart system** generation of Bosch systems (ask at a service center) and are suitable for the specified voltage. Bulbs must only be replaced with bulbs of the same voltage.

All components fitted to the drive unit and all other components of the drive (e.g. chainring, chainring receptacle, pedals, cranks) must only be replaced with identical components or components that have been specifically approved by the manufacturer for your eBike. This will protect the drive unit from overloading and becoming damaged.

Keep the drive unit clean and avoid contact with aggressive substances and fuels, e.g. diesel. Take care when cleaning the drive unit.

Cleaning

▸ **Do not submerge your eBike components in water, or wash with pressurized hose.** Your Bosch drive unit is designed to be water tight to rain water or non-pressure hose washing.

Keep all components of your eBike clean, especially the battery pack contacts and corresponding holder contacts. All components including the drive unit may not be immersed in water or cleaned with a high-pressure cleaner. Clean them carefully with a soft, damp cloth (using only mild soap and water).

Taking care of your eBike

Please observe the operating and storage temperatures of the eBike components. Protect the drive unit, display, and eBike battery against extreme temperatures (e.g. from intense sunlight without adequate ventilation). Extreme temperatures can cause the components (especially the eBike battery) to become damaged.

Have your eBike checked by an expert at least once a year (including mechanical parts, up-to-dateness of system software).

Please have your eBike serviced and repaired by a service center.

After-sales service and advice on using products

If you have any questions about the eBike and its components, contact a service center.

For contact details of service centers, please visit www.bosch-ebike.com.

More information



More information and videos about the eBike components and their functions can be found in the Bosch eBike Help Center.

Disposal



The individual eBike components as well as accessories and packaging should be recycled in an environmentally friendly manner.

Do not dispose of eBikes and their components with household waste.

Please return Bosch eBike components that are no longer usable, free of charge, to a specialist dealer or a recycling center.

Subject to change without notice.

Robert Bosch GmbH
72757 Reutlingen
Germany

www.bosch-ebike.com

kontakt@bosch.de

0 275 U07 3D5 (2026.02) T / 33

Active Line Plus | Performance Line | Performance Line PX | Performance Line Sport

Drive Unit

BDU3840 | BDU3843 | BDU3863 | BDU3883



en Original operating instructions

This manual contains important safety, performance and service information. Read and understand it along with the information provided to you by your bicycle manufacturer before using the product, and keep it for reference.

Performance Line CX | Speed | CX-R | Cargo Line

305

Table of Contents

Introduction 2
About Warnings 2
General Warnings 2
Using your Manual 3
Operating your Bosch Drive Unit 4
Safety instructions 4
Product description and specifications 6
Assembly 7
Operation 8
Maintenance/Cleaning 9
Cleaning 10
Taking care of your eBike 10
After-sales service and advice on using products 10
More information 10
Disposal 10

Introduction

Some content is published under license from the **PeopleForBikes Coalition, LTD**.

About Warnings

This manual contains many **DANGER**, **WARNING** and **CAUTION** indicators concerning the consequences of failure to use, assemble, maintain, store, inspect and dispose of a Bosch-equipped eBike in a safe manner.

– The combination of the safety alert symbol and the word **DANGER** indicates a hazardous situation that, if not avoided, will result in death or serious injury.
– The combination of the safety alert symbol and the word **WARNING** indicates a hazardous situation that, if not avoided, could result in death or serious injury.
– The combination of the safety alert symbol and the word **CAUTION** indicates a hazardous situation that, if not avoided, could result in minor or moderate injury.

General Warnings



Read all safety warnings and all instructions. Failure to follow the warnings and instructions may result in death, property damage or serious injury.

Save all safety warnings and instructions for future reference.

The term **eBike battery** used in these operating instructions refers to all original Bosch eBike batteries from the system generation **the smart system**.

▶ **Read ALL accompanying manuals before riding the bike for the first time.** Your Bosch Drive System comes with additional manuals and documents provided by the manufacturer of the bicycle and other components. Failure to read and understand safety information can result in death or serious injury.

⚠ WARNING

▶ **This manual contains important safety, performance and service information.** Read it before you take the first ride on your new bicycle, and keep it for reference. The manual can also be found online at www.bosch-ebike.com.

▶ **This manual is intended to be read together with the separate user manual provided with your bicycle.** Be sure to read all provided documents including labels on the product before your first ride.

▶ **Take responsibility for your own SAFETY.** If you have any questions or do not understand something, consult with your dealer or the bicycle or component manufacturer.

▶ **Some eBike accessories may present a choking hazard to small children.** Keep these accessories away from children.

⚠ CAUTION

▶ **The Bosch Drive System adds weight to your bicycle which you may not be used to lift.** Avoid injury, use proper lifting techniques.

Using your Manual

In addition to the functions outlined here, changes to software relating to troubleshooting and functional modifications may be introduced at any time.

Graphics

The bicycle shown in this manual may differ slightly from your bicycle, but will be similar enough to help you understand our instructions.

RIGHT-HAND and LEFT-HAND sides are determined by facing in the direction the bicycle will travel when going forward. When you see a broken line (------), the item referred to is hidden from view.

Operating your Bosch Drive Unit

Safety instructions



Read and understand all safety warnings and instructions. Failure to follow the below warnings could result in death or serious injury.

Save all safety warnings and instructions for future reference.

The term **eBike battery** used in these operating instructions refers to all original Bosch eBike batteries from the system generation **the smart system**.

The terms **drive** and **drive unit** used in these operating instructions refer to all original Bosch drive units from the system generation **the smart system**.

- ▸ **Read and observe the safety warnings and instructions in all operating instructions of the eBike components and your eBike.**
- ▸ **It is recommended that you periodically review this information to ensure you are following all recommendations for safe use of this product.**
- ▸ **Do not make any kind of modifications to the drive. Do not use any products to increase the performance and/or top speed of the eBike.** Modifying an eBike to increase its performance or speed may be unlawful and can result in component failure or a loss of control, leading to a crash resulting in serious injury or death. A modified eBike may no longer be regulated as an eBike, placing the operator at risk of personal liability and criminal prosecution in the event of a crash. In addition, doing so will generally reduce the service life of the eBike components. The drive unit and eBike may be damaged and guarantee and warranty claims on the eBike you have purchased may consequently be voided.
- ▸ **Do not open the drive unit. The drive unit must be repaired using only original spare parts and only by an authorized bicycle retailer.** This will ensure that the eBike remains safe to use. Unauthorized opening of the drive unit may render warranty claims null and void.
- ▸ **Remove the eBike battery from the eBike before beginning work (e.g. inspection, repair, assembly, maintenance, work on the chain, etc.) on the eBike. When working on permanently installed eBike batteries, take particular care to ensure that the eBike cannot be switched on.** Unintentional activation of the eBike poses a risk of injury.
- ▸ **The eBike can be switched on by pushing the eBike backwards or by turning the pedals backwards.**
- ▸ **You must not remove built-in eBike batteries yourself. Have a service center install and remove built-in eBike batteries for you.**



Under extreme conditions, such as continuously high loads at low speed when riding up hills or carrying loads, parts of the drive unit can reach temperatures in excess of 140 °F (60 °C).

- ▸ **After a ride, do not allow your unprotected hands or legs to come into contact with the housing of the drive unit.** Under extreme conditions, such as continuously high torques at low travel speeds, or when riding up hills or carrying loads, very high temperatures may be reached on the housing. Contact with hot components can result in burns if touched.

  The temperatures that may be reached on the drive unit housing are influenced by the following factors:
  – Ambient temperature
  – Ride profile (route/gradient)
  – Ride duration
  – Riding modes
  – User behavior (personal effort)
  – Total weight (rider, eBike, luggage)

– Motor cover on the drive unit
– Heat dissipation properties of the bicycle frame
– Type of drive unit and type of gear-shifting

▶ **Use only original Bosch eBike batteries from the system generation the smart system that the manufacturer has approved for your eBike.** Using other eBike batteries can lead to injuries and pose a fire hazard. Bosch accepts no liability if other eBike batteries are used.

Safety instructions for the rim magnet

The following safety instructions must be observed when handling the rim magnet:

▶ **Warning of very strong magnetic fields: The rim magnet generates a very strong magnetic field that may influence the magnetic storage media (e.g. credit card) and electronic devices (e.g. clock). There is a risk of data loss and damage to devices.** Do not move any media or devices sensitive to magnetic fields into the immediate vicinity of the rim magnet.

▶ **Warning of hand injuries caused by parts attracted to the magnet: There is a risk of injury if your fingers or hands get caught between the magnet and the objects attracted to it. This may cause skin injuries (e.g. if metal chips are attracted), crushing injuries, contusions or fractures.** You can avoid these by being vigilant and wearing suitable protective clothing.

▶ **Danger to persons with implants and other medical devices, e.g. pacemakers, defribrillators or insulin pumps:**
Keep these away from the immediate vicinity of the rim magnet.

– The magnet generates a field that can impair the function of implants and medical devices.
– To avoid impairments, the rim magnet should not be held directly in front of the chest.
– A minimum distance of approx. 11.8 in (30 cm) to the chest should be maintained.

▶ **Observe all national regulations which set out the approved use of eBikes.**

▶ **Please observe all local, state and federal regulations when registering and using eBikes.**

Privacy notice

When connecting the eBike to the **Bosch DiagnosticTool 3** or when exchanging eBike components, technical information about your eBike (e.g. bicycle manufacturer, model, bike ID, configuration data) as well as regarding the use of the eBike (e.g. total travel time, energy consumption, temperature) is transmitted to Bosch eBike Systems (Robert Bosch GmbH) for processing your request, in service cases and for the purposes of product improvement. You can find further information about data processing at www.bosch-ebike.com/privacy-full.

Product description and specifications

Intended use

The Bosch drive unit from the system generation **the smart system** is intended exclusively for driving your eBike and must not be used for any other purpose.

In addition to the functions outlined here, changes to software relating to troubleshooting and functional modifications may be introduced at any time.

Technical data

Drive unit		Drive Unit Performance Line CX/ Cargo Line	Drive Unit Performance Line CX-R	Drive Unit Performance Line Speed
Product code		BDU3840 BDU3843	BDU3863	BDU3883
Continuous rated power	W	250	250	250
Max. torque	lb ft Nm	63[A)] 85[A)]	74[A)] 100[A)]	74[A)] 100[A)]
Rated voltage	V	36	36	36
Operating temperature	°F °C	+23 to +104 −5 to +40	+23 to +104 −5 to +40	+23 to +104 −5 to +40
Storage temperature	°F °C	+50 to +104 +10 to +40	+50 to +104 +10 to +40	+50 to +104 +10 to +40
Protection rating		IP55	IP55	IP55
Weight, approx.	lbs kg	6.2 2.8	5.9 2.7	6.2 2.8

A) You can change the preset value via the **eBike Flow** app. The maximum torque may vary depending on the bicycle manufacturer's specifications.

Bosch eBike Systems uses FreeRTOS (see www.freertos.org).

Bicycle lights[A)]		
Voltage approx.	V	12
Maximum power	W	18

A) Depends on legal regulations, not possible in all country-specific models via the eBike battery

Inserting a bulb incorrectly can cause it to blow.

Details on noise emissions on the drive unit

The A-rated emission sound pressure level for the drive unit is < 70 dB(A) in standard operating mode. If the eBike is moved without authorization, the drive unit generates an alarm tone as a key feature of the **<eBike Alarm>** service. This alarm tone can exceed a noise emission level of 70 dB(A) and measures 80 dB(A) at a distance of approx. 6.6 ft (2 m) from the drive unit. The alarm tone is only available once the **<eBike Alarm>** service has been activated and can be deactivated via the **eBike Flow** app.

Assembly

Checking the speed sensor (see figure A)

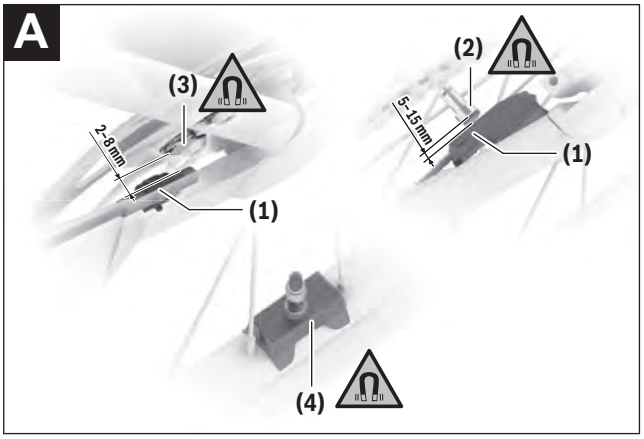

(1) Speed sensor [a)]
(2) Spoke magnet
(3) CenterLock magnet [b)]
(4) Rim magnet

a) Different sensor shape and installation position possible
b) a different installation position is possible

Speed Sensor (slim)

The speed sensor (slim) **(1)** and its CenterLock magnet **(3)** or spoke magnet **(2)** must be fitted ex works such that the magnet moves past the speed sensor at a distance of at least approx. 0.08 in (2 mm) and at most approx. 0.6 in (15 mm) with each rotation of the wheel.

The correct distance between the magnet and sensor must be maintained (see figure **A**) if design changes are made.

Notes: Ensure that you do not damage the sensor or sensor bracket when fitting or removing the rear wheel.

When changing a wheel, make sure that the sensor cable is routed so that it is not under tension and has no kinks.

The CenterLock magnet **(3)** can only be removed and reinserted up to five times.

Rim magnet



Warning of hand injuries caused by parts attracted to the magnet: There is a risk of injury if your fingers or hands get caught between the magnet and the objects attracted to it. This may cause skin injuries (e.g. if metal chips are attracted), crushing injuries, contusions or fractures. You can avoid these by being vigilant and wearing suitable protective clothing.

Note: The rim magnet's alignment with the rim must not be changed (see figure **A**).

If a rim magnet is installed, no sensor is required to detect a wheel turn. The drive unit itself detects when the magnet is close to it and calculates the speed and any other data required from the frequency of the emergence of the magnetic field.

Since the drive unit is sensitive to magnetic fields, avoid other magnetic fields in the vicinity of the drive unit (e.g. magnetic clipless pedals, magnetic cadence sensors, magnetic or magnetized tools, etc.) in order to prevent disruption to the drive unit.

Operation

A control unit from the system generation **the smart system** is required for starting operation of the eBike. Observe the operating instructions for the control unit and additional components from the system generation **the smart system** where necessary.

Notes on cycling with your eBike

Note: The eBike system **always** starts in **OFF** mode for drive units with a maximum speed of more than **20 mph (32 km/h)**.

When does the drive take effect?

The drive assists your cycling only when you are pedaling. If you do not pedal, the assistance will not work. The drive output always depends on the pedaling force and cadence that you apply.

If you apply less force or a lower cadence, you will receive less assistance than if you apply a lot of force or a higher cadence. This applies irrespective of the riding mode.

The drive automatically switches off at speeds over **20/28 mph (32/45 km/h)**. When the speed falls below **20/28 mph (32/45 km/h)**, the drive automatically becomes available again.

An exception applies to the walk assistance function, in which the eBike can be pushed at low speed without pedaling. The pedals may rotate when walk assistance is in use.

You can also use the eBike as a normal bicycle without assistance at any time, either by switching off the eBike or by setting the riding mode to **OFF**. The same applies when the eBike battery is drained.

Interaction of the drive unit with the gear-shifting

You should shift through gears on an eBike in the same manner as when using a normal bicycle (observe the operating instructions of your eBike with regard to this point).

Irrespective of the type of gear shifting, it is advisable that you briefly reduce the pressure on the pedals when changing gear. This will aid gear shifting and reduce wear on the powertrain.

By selecting the correct gear, you can increase your speed and range while applying the same amount of force.

Gaining initial experience

We recommend that you gain initial experience with the eBike away from busy roads.

Test the various riding modes. Start in a riding mode with a small amount of assistance. As soon as you feel confident, you can ride your eBike in traffic like any other bicycle.

Test the range of your eBike in different conditions before planning longer and more demanding trips.

Influences on range

It is not possible to calculate the range accurately before and during a trip because the range is affected by a number of factors.

Enter the factors in the Range Assistant in order to better assess the effects on the range.


Scan the code provided to open the Range Assistant.

Maintenance/Cleaning

⚠ WARNING

- **Do not open any of the components. Service should only be carried out at an authorized Bosch eBike dealer.** Failure to follow above warning can cause death or serious injury. Refer to your bicycle manual or component manual for all non-Bosch drive system components.
- **Always remove the battery pack before performing any bicycle inspection, maintenance or repair.** Failure to remove the battery pack before performing bicycle inspection, maintenance or repair can lead to serious injury.
- **If you suspect that something is loose, do not ride your bike.** See your Bosch eBike dealer, only a qualified service provider should perform work on your Bosch Drive System. All nuts, bolts, screws require the correct tightening force. Too little force and the fastener may not hold securely. Too much force and the fastener can strip threads, stretch, deform or break. Either way, incorrect tightening force can result in component failure, which can cause you to lose control and fall.
- **If replacing your battery, buy only a genuine Bosch battery pack from an approved source. See your Bosch eBike dealer for original Bosch parts.**
- **Always switch the battery pack off, when inserting or removing it from the holder.** Never attempt to insert or remove the battery pack while riding the bike.
- **Do not charge or use your eBike in any area with a potentially explosive atmosphere, such as at a fueling area, or in areas where the air contains chemicals or particles (such as grain, dust, or metal powders).** Obey all signs and instructions.
- **Do not submerge your eBike components in water, or wash with pressurized hose.** Your Bosch drive unit is designed to be water tight to rain water or non-pressure hose washing.
- **Note down the manufacturer and the number of the key.** In case of loss of the keys, please refer to an authorised Bosch eBike dealer. Please provide the name of the manufacturer and the number of the key.
- **Do not apply any cleaning agents, paint or chemicals to any components of the Bosch drive system as they may cause premature failure of the component.**

When changing the bulbs, ensure that they are compatible with **the smart system** generation of Bosch systems (ask at a service center) and are suitable for the specified voltage. Bulbs must only be replaced with bulbs of the same voltage.

All components fitted to the drive unit and all other components of the drive (e.g. chainring, chainring receptacle, pedals, cranks) must only be replaced with identical components or components that have been specifically approved by the manufacturer for your eBike. This will protect the drive unit from overloading and becoming damaged.

Keep the drive unit clean and avoid contact with aggressive substances and fuels, e.g. diesel. Take care when cleaning the drive unit.

Cleaning

- **Do not submerge your eBike components in water, or wash with pressurized hose.** Your Bosch drive unit is designed to be water tight to rain water or non-pressure hose washing.

Keep all components of your eBike clean, especially the battery pack contacts and corresponding holder contacts. All components including the drive unit may not be immersed in water or cleaned with a high-pressure cleaner. Clean them carefully with a soft, damp cloth (using only mild soap and water).

Taking care of your eBike

Please observe the operating and storage temperatures of the eBike components. Protect the drive unit, display, and eBike battery against extreme temperatures (e.g. from intense sunlight without adequate ventilation). Extreme temperatures can cause the components (especially the eBike battery) to become damaged.

Have your eBike checked by an expert at least once a year (including mechanical parts, up-to-dateness of system software).

Please have your eBike serviced and repaired by a service center.

After-sales service and advice on using products

If you have any questions about the eBike and its components, contact a service center.

For contact details of service centers, please visit www.bosch-ebike.com.

More information



More information and videos about the eBike components and their functions can be found in the Bosch eBike Help Center.

Disposal



The individual eBike components as well as accessories and packaging should be recycled in an environmentally friendly manner.

Do not dispose of eBikes and their components with household waste.

Please return Bosch eBike components that are no longer usable, free of charge, to a specialist dealer or a recycling center.

Subject to change without notice.

Robert Bosch GmbH
72757 Reutlingen
Germany

www.bosch-ebike.com

kontakt@bosch.de

0 275 U07 3D4 (2026.02) T / 32

CompactTube 400
PowerTube 360 | 500 | 540 | 600 | 625 | 720 | 750 | 800
PowerPack Frame 400 | 540 | 800



en Original operating instructions

This manual contains important safety, performance and service information. Read and understand it along with the information provided to you by your bicycle manufacturer before using the product, and keep it for reference.

CompactTube

BBP3248

PowerTube

BBP3755
BBP3756
BBP3765
BBP3766
BBP3775
BBP3776
BBP3835
BBP3855
BBP3865
BBP3875
BBP3876
BBP3885
BBP3886

PowerPack Frame

BBP3548
BBP3558
BBP3588

Table of contents

Introduction 2
About Warnings 2
General Warnings 2
Using your Manual 3
On-product warning labels 4
Handling the lithium-ion battery pack 5
Safety warnings for Bosch eBike batteries 5
Product description and specifications 8
Fitting 16
Operation 23
Transport 23
Maintenance/cleaning 24
Storing 25
Troubleshooting 26
Recycling Program 27

Introduction

Some content is published under license from the **PeopleForBikes Coalition, LTD**.

About Warnings

This manual contains many **DANGER**, **WARNING** and **CAUTION** indicators concerning the consequences of failure to use, assemble, maintain, store, inspect and dispose of a Bosch-equipped eBike in a safe manner.

– The combination of the safety alert symbol and the word **DANGER** indicates a hazardous situation that, if not avoided, will result in death or serious injury.
– The combination of the safety alert symbol and the word **WARNING** indicates a hazardous situation that, if not avoided, could result in death or serious injury.
– The combination of the safety alert symbol and the word **CAUTION** indicates a hazardous situation that, if not avoided, could result in minor or moderate injury.

General Warnings



Read all safety warnings and all instructions. Failure to follow the warnings and instructions may result in death, property damage or serious injury.

Save all safety warnings and instructions for future reference.

The term **eBike battery** used in these operating instructions refers to all original Bosch eBike batteries from the system generation **the smart system**.

▶ **Read ALL accompanying manuals before riding the bike for the first time.** Your Bosch Drive System comes with additional manuals and documents provided by the manufacturer of the bicycle and other components. Failure to read and understand safety information can result in death or serious injury.

⚠ WARNING

▶ **This manual contains important safety, performance and service information.** Read it before you take the first ride on your new bicycle, and keep it for reference. The manual can also be found online at www.bosch-ebike.com.

▶ **This manual is intended to be read together with the separate user manual provided with your bicycle.** Be sure to read all provided documents including labels on the product before your first ride.

▶ **Take responsibility for your own SAFETY.** If you have any questions or do not understand something, consult with your dealer or the bicycle or component manufacturer.

▶ **Some eBike accessories may present a choking hazard to small children.** Keep these accessories away from children.

⚠ CAUTION

▶ **The Bosch Drive System adds weight to your bicycle which you may not be used to lift.** Avoid injury, use proper lifting techniques.

Using your Manual

In addition to the functions outlined here, changes to software relating to troubleshooting and functional modifications may be introduced at any time.

Graphics

The bicycle shown in this manual may differ slightly from your bicycle, but will be similar enough to help you understand our instructions.

RIGHT-HAND and LEFT-HAND sides are determined by facing in the direction the bicycle will travel when going forward. When you see a broken line (------), the item referred to is hidden from view.

On-product warning labels

- **Warning labels have been placed on the Bosch eBike System for your protection. Read and follow the instructions of the labels on the product carefully. If a label becomes illegible or comes off, contact your Bosch bicycle dealer to obtain a replacement.** Replacement safety labels are provided by Bosch at no charge.

⚠ WARNING

- **To reduce the risk of injury, explosion, or fire, the user must read the instruction manual.**
  Do not crush, puncture, disassemble, short terminals, or dispose in fire.
  Do not use battery once it has been impacted, sustained water damage or visibly damaged.
  Charge battery only with Bosch eBike chargers.

Handling the lithium-ion battery pack

Safety warnings for Bosch eBike batteries




Read and understand all safety warnings and instructions. Failure to follow the below warnings could result in death or serious injury.

Save all safety warnings and instructions for future reference.

The term **eBike battery** used in these operating instructions refers to all original Bosch eBike batteries from the system generation **the smart system**.

The terms **drive** and **drive unit** used in these operating instructions refer to all original Bosch drive units from the system generation **the smart system**.

The term **charger** is used in these instructions to mean all original Bosch chargers from the system generation **the smart system**.

- ▶ **Read and observe the safety warnings and instructions in all operating instructions of the eBike components and your eBike.**
- ▶ **It is recommended that you periodically review this information to ensure you are following all recommendations for safe use of this product.** Improper use, storage or charging of the battery can cause thermal runaway leading to a sudden and severe fire resulting in property damage, serious injury or death.
- ▶ **When fitting a bottle holder or other attachments to the frame, always make sure the screws are the correct length to prevent damage to any eBike battery that is mounted in the frame.** Always remove the eBike battery before you fit screws to the frame. If you are not confident doing this or if your eBike battery is built in, please contact a service center.
- ▶ **Remove the eBike battery from the eBike before beginning work (e.g. inspection, repair, assembly, maintenance, work on the chain, etc.) on the eBike. When working on permanently installed eBike batteries, take particular care to ensure that the eBike cannot be switched on.** Unintentional activation of the eBike poses a risk of injury.
- ▶ **You must not remove built-in eBike batteries yourself. Have a service center install and remove built-in eBike batteries for you.**

INSTRUCTIONS PERTAINING TO RISK OF FIRE, ELECTRIC SHOCK, EXPLOSION OR INJURY

⚠ DANGER

- ▶ **Do not puncture or crush the battery pack. Do not impact or drop the battery pack or modify it in any way.** Do not use the battery pack if it shows visible damage. Danger of fire or explosion which can cause death or serious injury.



Protect the battery pack against heat (e.g., temperature > 140 °F [> 60 °C]), fire and immersing into water. Danger of explosion.

⚠ WARNING

- ▶ **Use only original Bosch battery packs approved for your eBike by the manufacturer and purchased from a credible source.** Use of non-approved or counterfeit battery packs can lead to death or serious injury.
- ▶ **Never disassemble the eBike battery.** No user serviceable parts. Risk of short-circuiting and fire.
- ▶ **When the eBike battery is not in use, keep it away from paper clips, coins, keys, nails, screws or other small metal objects that could make a connection from one terminal to another.** A short circuit between the terminals may cause burns or a fire.

- **Avoid mechanical loads and exposure to high temperatures.** These can damage the battery cells and cause the flammable contents to leak out.
- **Do not place the charger or the eBike battery near flammable materials. Ensure the eBike battery is completely dry and kept on a clean, dry, flat and non-flammable surface.** There is a risk of fire due to the heat generated during charging. Keep the battery and the charge port connectors (terminals or pins) dry, clean and free of debris. Make sure the battery and charger have no items covering or placed on top of them.
- **The eBike battery must not be left unattended while charging, especially overnight.** Once the battery is fully charged, disconnect the eBike battery from the charger and the charger from the mains.
- **If used incorrectly, the eBike battery may leak fluid; avoid contact. If contact occurs, rinse off with water. If the liquid comes into contact with your eyes, seek additional medical attention.** Fluid ejected from the battery may cause skin irritation or burns.
- **eBike batteries must not be subjected to mechanical shock, excessive vibration or excessive weight from objects placed on the battery.** There is a risk of the eBike battery being damaged.
- **The eBike battery may give off fumes or smoke if it becomes damaged or is used incorrectly. Ensure the area is well ventilated and seek medical attention should you experience any adverse effects.** The fumes or smoke may irritate the respiratory system.
- **Do not charge or use your eBike in any area with a potentially explosive atmosphere, such as at a fueling area, or in areas where the air contains chemicals or particles (such as grain, dust, or metal powders).** Obey all signs and instructions.
- **Only charge the Bosch eBike battery with a compatible charger, such as an original Bosch charger from the system generation the smart system.** You can therefore help to protect the eBike battery against damage and risks, such as overheating and short circuits.
- **Use the eBike battery only in conjunction with eBikes from the system generation the smart system.** This is the only way in which you can protect the eBike battery against dangerous overload.
- **It is recommended to only use original Bosch eBike batteries from the system generation the smart system.**
- **Keep the battery and charger away from children and animals. Unless supervised or instructed on proper/responsible use, children or people who lack the necessary experience or understanding to operate the battery and charger safely should not be left unattended with the battery and charger.** There is a significant risk of personal injury and/or damage.

The safety of both our customers and our products is important to us. Our eBike batteries are lithium-ion batteries which have been developed and manufactured in accordance with the latest technology. We comply with or exceed the requirements of all relevant safety standards. When damaged, improperly charged or misused, Lithium-Ion batteries are susceptible to an uncontrollable energy release resulting in a sudden and severe fire. A Lithium-Ion battery fire generally cannot be put out until the energy contained therein is exhausted. Therefore, proper use, charging, discharging, care, maintenance, storage and transportation are all critical to the long-term use of the battery and the safety of the user and others.

- **Do not use the rack-mounted battery as a handle.** Lifting the eBike up by the battery can damage the battery.
- **Do not touch severely corroded battery terminals. Do not apply solder to the terminals.**
- **Keep the battery and the charge port connectors (terminals or pins) dry, clean and free of debris. Ensure the battery and charger have no items covering or placed on top of them.**

- ▶ **The battery charge port terminals and/or the charger plug can get contaminated. Repeatedly connecting contaminated terminals can result in worn and damaged terminals.** Clean thoroughly before connecting the charger.
- ▶ **Do not touch the terminals of the battery or charger during an electrical storm in case of a lightning strike.**
- ▶ **Always follow charger and battery operating, charging and storage temperature.**
- ▶ **Do not use a power inverter to charge the battery from a 12-volt automobile auxiliary power outlet in a vehicle.** Incorrect or excessive voltage can result in overheating, which can damage the battery and reduce the battery's lifespan or cause a sudden and severe fire.
- ▶ **If the battery becomes too hot, starts to emit smoke, flame or a strong odor, shows any signs of deformation/bulging/leaks/discoloration or otherwise presents unusual characteristics, discontinue use of the battery.** If a battery exhibits any of these symptoms and is failing catastrophically, evacuate the area immediately and call fire authorities. Only if possible to do so safely and quickly should you attempt to move the battery outdoors and away from people and flammable materials.

Privacy notice

When connecting the eBike to the **Bosch DiagnosticTool 3** or when exchanging eBike components, technical information about your eBike (e.g. bicycle manufacturer, model, bike ID, configuration data) as well as regarding the use of the eBike (e.g. total travel time, energy consumption, temperature) is transmitted to Bosch eBike Systems (Robert Bosch GmbH) for processing your request, in service cases and for the purposes of product improvement. You can find further information about data processing at www.bosch-ebike.com/privacy-full.

Product description and specifications

Product Features PowerTube 500/625/750

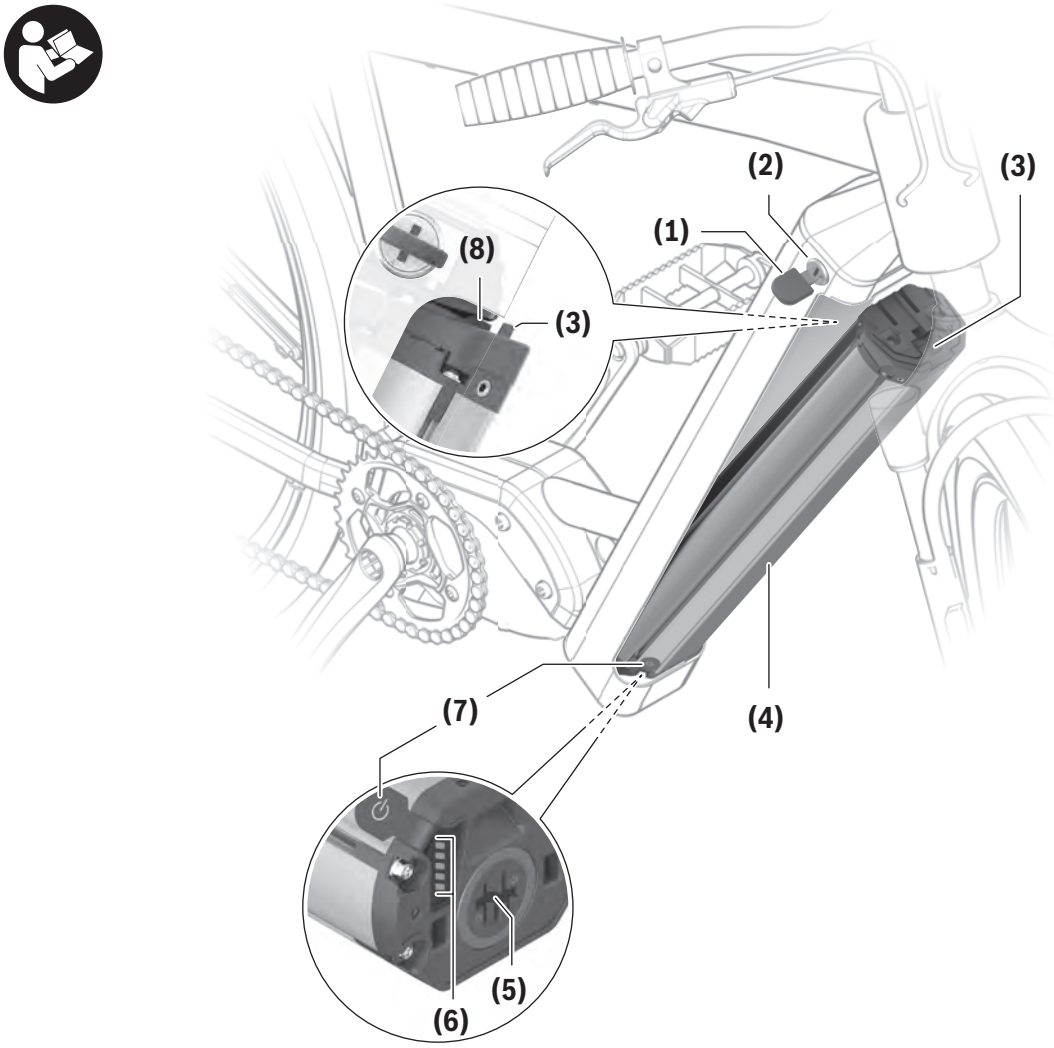

All representations of bike components are schematic and can deviate from your eBike.

(1) Key for the battery lock
(2) Battery lock
(3) PowerTube battery safety hook
(4) PowerTube battery (pivot)
(5) Socket for charging connector
(6) Operation/battery charge indicator
(7) On/off button
(8) PowerTube battery safety restraint

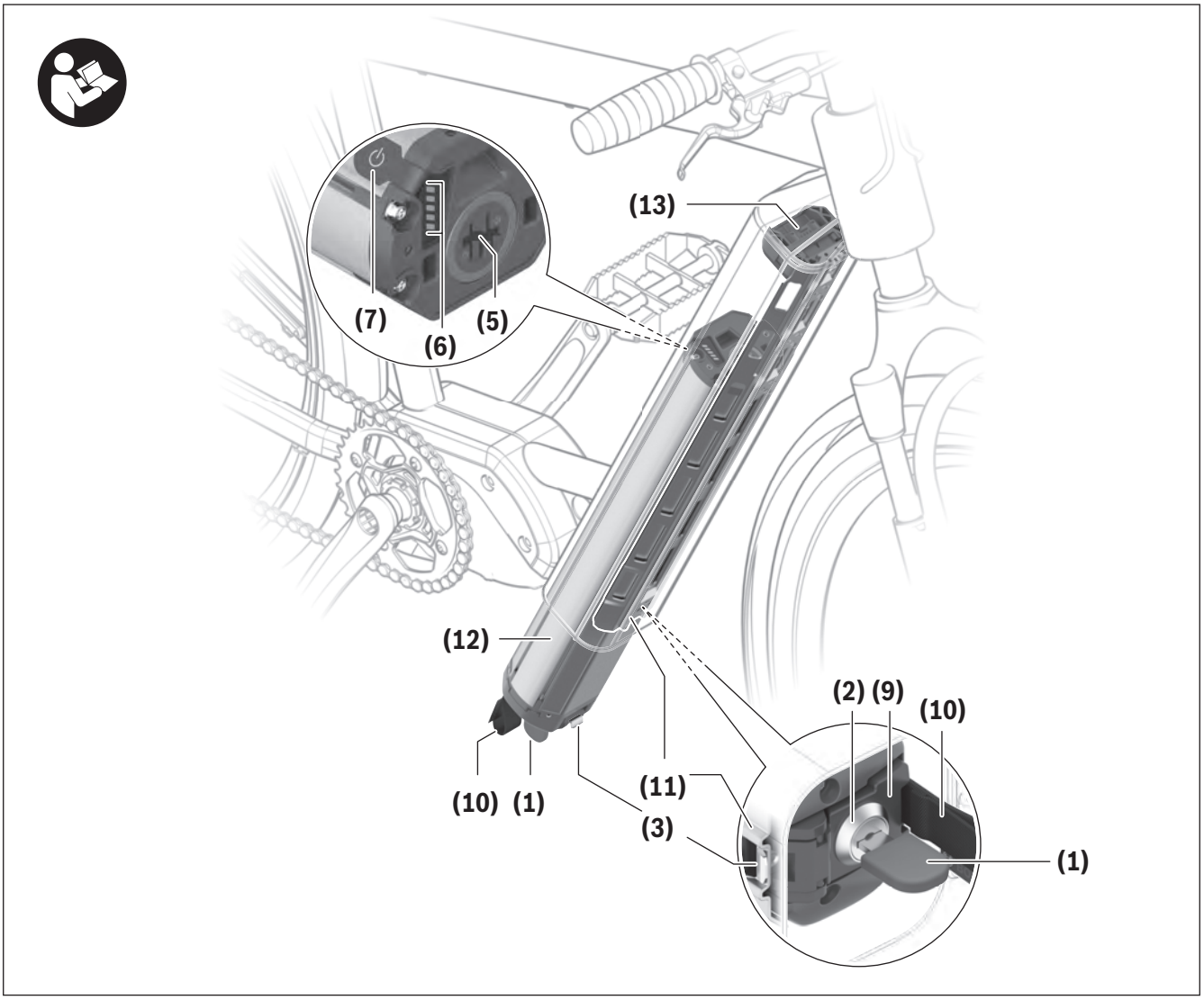

All representations of bike components are schematic and can deviate from your eBike.

(1) Key for the battery lock
(2) Battery lock
(3) PowerTube battery safety hook
(5) Socket for charging connector
(6) Operation/battery charge indicator
(7) On/off button
(9) Locking mechanism
(10) Pull strap
(11) Axial rail
(12) PowerTube battery (axial)
(13) Upper axial PowerTube holder

Product Features of PowerTube 360/540/600/720/800

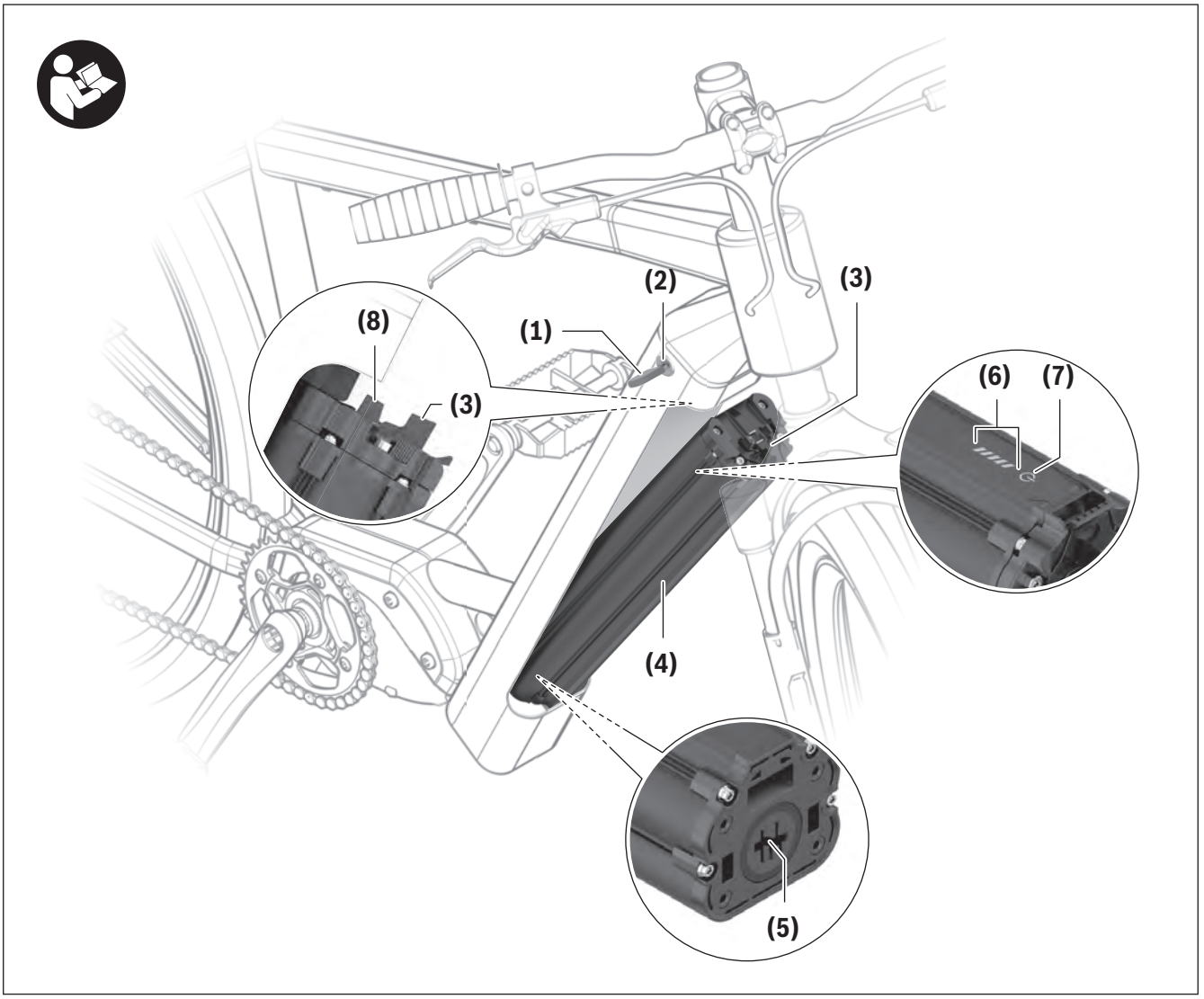

All representations of bike components are schematic and can deviate from your eBike.

(1) Key for the battery lock
(2) Battery lock
(3) PowerTube battery safety hook
(4) PowerTube battery (pivot)
(5) Socket for charging connector
(6) Operation/battery charge indicator
(7) On/off button
(8) PowerTube battery safety restraint

Product Features CompactTube

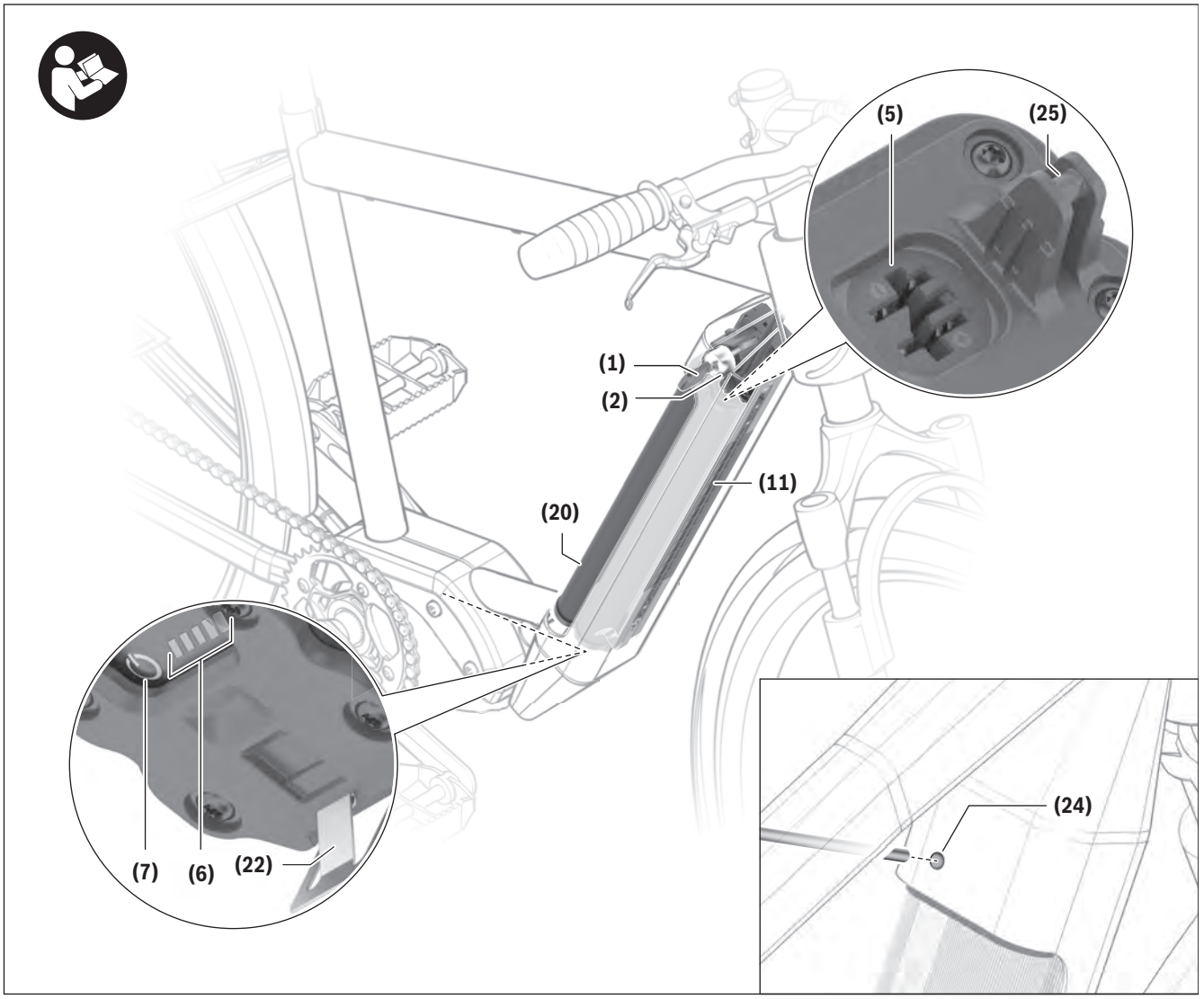

All representations of bike components are schematic and can deviate from your eBike.

(1) Key for the battery lock
(2) Battery lock
(5) Socket for charging connector
(6) Operation/battery charge indicator
(7) On/off button
(9) Locking mechanism
(11) Axial rail
(20) CompactTube battery (pivot)
(22) Safety restraint for CompactTube battery (pivot)
(24) CompactTube unlocking element[a)]
(25) CompactTube holding element

a) Designs may vary

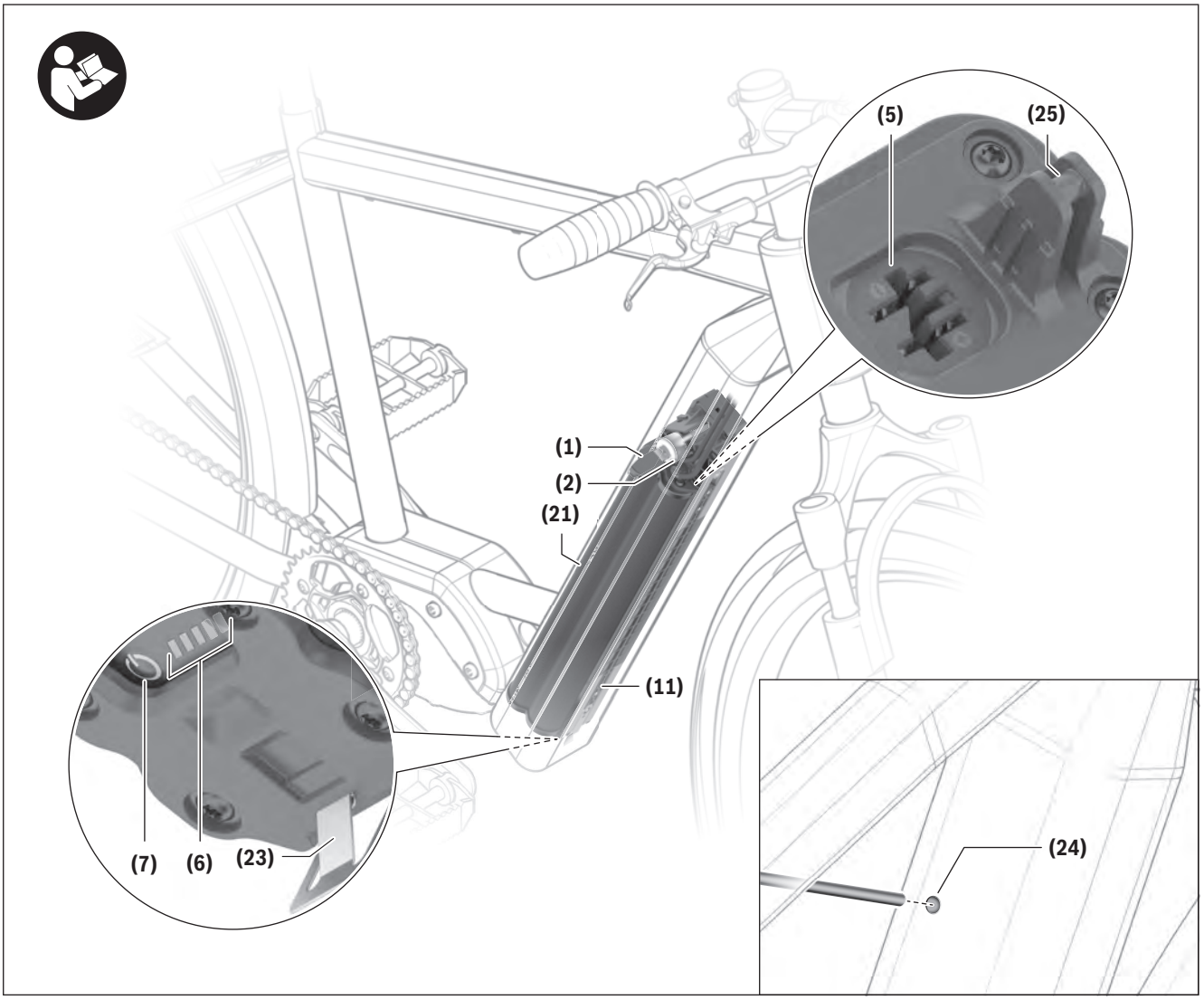

All representations of bike components are schematic and can deviate from your eBike.

(1) Key for the battery lock
(2) Battery lock
(5) Socket for charging connector
(6) Operation/battery charge indicator
(7) On/off button
(9) Locking mechanism
(11) Axial rail
(21) CompactTube battery (axial)
(23) Safety restraint for CompactTube battery (axial)
(24) CompactTube unlocking element[a)]
(25) CompactTube holding element

a) Designs may vary

Product Feature PowerPack Frame

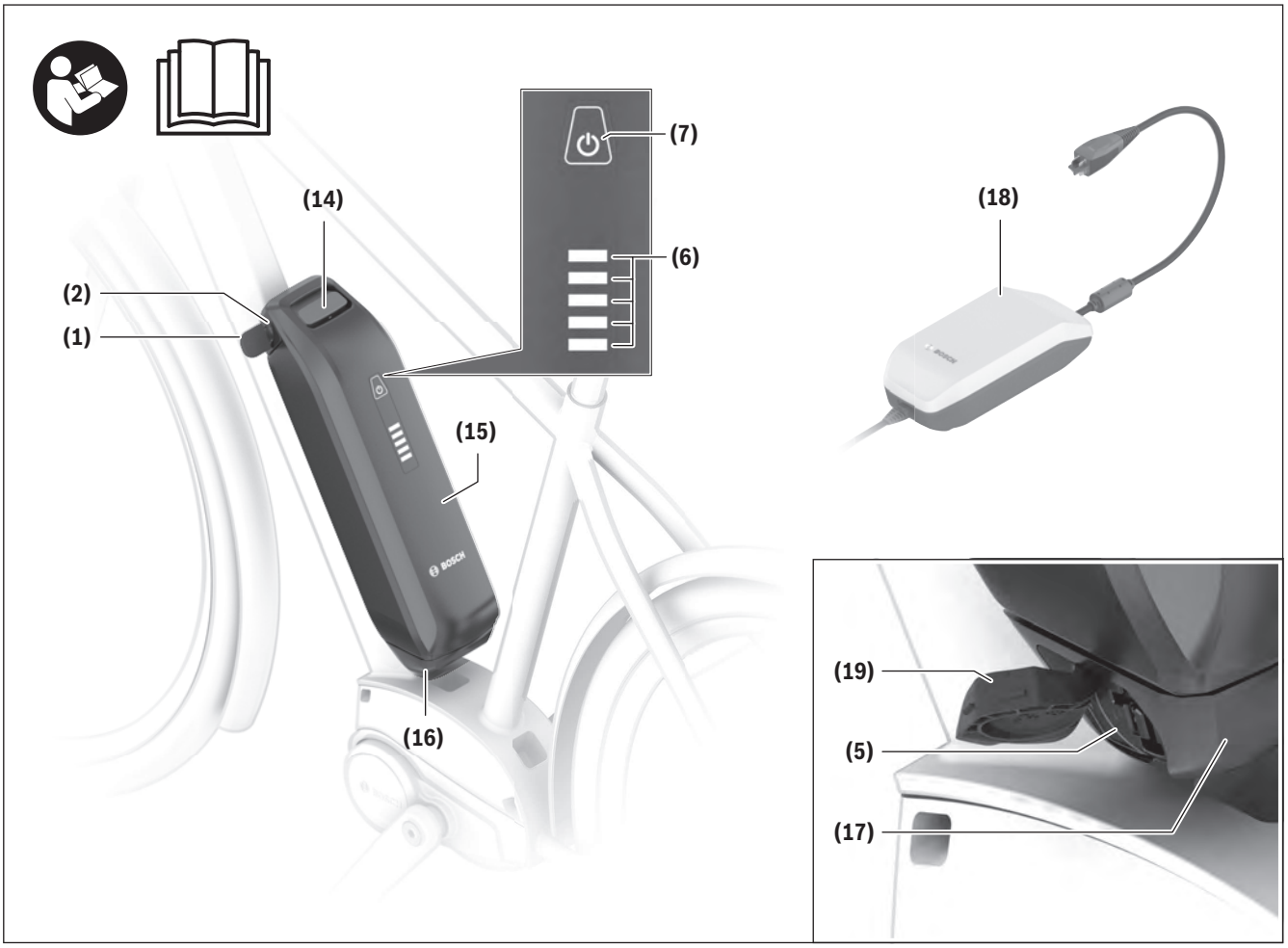

All representations of bike components are schematic and can deviate from your eBike.

(1) Key for the battery lock
(2) Battery lock
(5) Socket for charging connector
(6) Operation/battery charge indicator
(7) On/off button
(14) Upper holder for PowerPack battery
(15) PowerPack battery
(16) Lower holder for PowerPack battery (socket without charging option)
(17) Lower holder for PowerPack battery (socket with charging option)
(18) Charger
(19) Charging socket cover

Intended Use

The Bosch eBike batteries from the system generation **the smart system** are intended exclusively for the power supply of your drive unit from the system generation **the smart system** and must not be used for any other purpose.

Technical data

Li-ion battery		PowerTube 500	PowerTube 625	PowerTube 750	PowerTube 800
Product code	Horizontal	BBP3755	BBP3765	BBP3775	BBP3885
Product code	Vertical	BBP3756	BBP3766	BBP3776	BBP3886
Rated voltage	V	36	36	36	36
Nominal capacity	Ah	13.4	16.7	20.1	21.3
Energy	Wh	500[A)]	625[A)]	750[A)]	800[A)]
Operating temperature	°F	+23 to +104	+23 to +104	+23 to +104	+23 to +104
	°C	−5 to +40	−5 to +40	−5 to +40	−5 to +40
Storage temperature	°F	+50 to +104	+50 to +104	+50 to +104	+50 to +104
	°C	+10 to +40	+10 to +40	+10 to +40	+10 to +40
Permitted charging temperature range	°F	+32 to +104	+32 to +104	+32 to +104	+32 to +104
	°C	0 to +40	0 to +40	0 to +40	0 to +40
Weight, approx.	lbs	6.6	7.9	9.5	8.6
	kg	3.0	3.6	4.3	3.9
Protection rating		IP55	IP55	IP55	IP55

A) Advertised battery energy capacity is an approximation. Due to manufacturing tolerances measured capacity may not always match the advertised capacity.

Li-ion battery		PowerTube 360	PowerTube 540	PowerTube 600	PowerTube 720
Product code	Horizontal	BBP3835	BBP3855	BBP3865	BBP3875
Product code	Vertical	–	–	–	BBP3876
Rated voltage	V	36	36	36	36
Nominal capacity	Ah	9.7	14.5	16.0	19.4
Energy	Wh	360[A)]	540[A)]	600[A)]	720[A)]
Operating temperature	°F °C	+23 to +104 −5 to +40	+23 to +104 −5 to +40	+23 to +104 −5 to +40	+23 to +104 −5 to +40
Storage temperature	°F °C	+50 to +104 +10 to +40	+50 to +104 +10 to +40	+50 to +104 +10 to +40	+50 to +104 +10 to +40
Permitted charging temperature range	°F °C	+32 to +104 0 to +40	+32 to +104 0 to +40	+32 to +104 0 to +40	+32 to +104 0 to +40
Weight, approx.	lbs kg	4.6 2.1	6.6 3.0	6.6 3.0	8.6 3.9
Protection rating		IP55	IP55	IP55	IP55

A) Advertised battery energy capacity is an approximation. Due to manufacturing tolerances measured capacity may not always match the advertised capacity.

Li-ion battery		CompactTube 400	PowerPack Frame 400	PowerPack Frame 540	PowerPack Frame 800
Product code		BBP3248	BBP3548	BBP3558	BBP3588
Rated voltage	V	36	36	36	36
Nominal capacity	Ah	10.6	11.1	14.4	22.2
Energy	Wh	400[A)]	400[A)]	540[A)]	800[A)]
Operating temperature	°F °C	+23 to +104 −5 to +40	+23 to +104 −5 to +40	+23 to +104 −5 to +40	+23 to +104 −5 to +40
Storage temperature	°F °C	+50 to +104 +10 to +40	+50 to +104 +10 to +40	+50 to +104 +10 to +40	+50 to +104 +10 to +40
Permitted charging temperature range	°F °C	+32 to +104 0 to +40	+32 to +104 0 to +40	+32 to +104 0 to +40	+32 to +104 0 to +40
Weight, approx.	lbs kg	4.6 2.1	4.8 2.2	6.6 3.0	8.6 3.9
Protection rating		IP55	IP55	IP55	IP55

A) Advertised battery energy capacity is an approximation. Due to manufacturing tolerances measured capacity may not always match the advertised capacity.

Fitting

▶ **Ensure the eBike battery is placed on clean surfaces only.** Avoid getting dirt, e.g. sand or soil, in the charging socket and contacts in particular.

Charging the eBike Battery

Note: The eBike battery is supplied partially charged. To ensure full capacity of the eBike battery, fully charge the battery in the charger before using it for the first time.

To charge the eBike battery, read and follow the instructions in the operating manual for the charger.

The eBike battery can be charged at any state of charge. Interrupting the charging process does not damage the eBike battery.

The eBike battery has a temperature monitoring function that only allows it to be charged within a temperature range of **32 °F (0 °C)** to **104 °F (40 °C)**.



If the temperature of the eBike battery is outside this charging range, three of the LEDs on the battery charge indicator **(6)** will flash. Disconnect the eBike battery from the charger and let it reach the correct temperature range.

⚠ CAUTION

▶ **Do not connect the battery pack to the charger until it has reached the allowable charging temperature.**

Note: At temperatures of around **32 °F (0 °C)**, the start of the charging process for the eBike battery can be delayed by approximately **5** min, once the plug of the charger has been connected to the charging socket on the eBike.

Note: If your eBike has a permanently installed eBike battery, you can receive the messages about the status of the eBike battery on the control unit or on the display. To do this, read and follow the operating instructions for the control unit/display.

Battery charge indicator outside of the eBike

Note: The eBike battery charge indicator **(6)** switches back off as soon as the eBike battery is switched on.

The five LEDs on the battery charge indicator **(6)** indicate the battery's state of charge when the eBike battery is switched on.

Each LED represents approximately 20 % of the charging capacity. When the eBike battery is fully charged, all five LEDs will be lit.

The eBike battery's state of charge when switched on is also shown on the display. Read and follow the operating instructions for the drive unit and display.

If the eBike battery's capacity is less than 10 %, the last remaining LED will flash.

Once charging is complete, disconnect the eBike battery from the charger and the charger from the mains.

Inserting and Removing the eBike Battery

▶ **When inserting the battery into the holder or removing it from the holder, always switch off the eBike battery and the eBike beforehand.**

▶ **Once you have inserted the eBike battery, check that it is correctly positioned and secure in all directions.**

▶ **Do not remove the battery from the eBike during the charging process.** If the battery has to be removed, first end the charging process before removing the battery from the eBike, then once the battery is in a proper state for charging, restart the charging process.

Removing the PowerTube Battery (pivot)

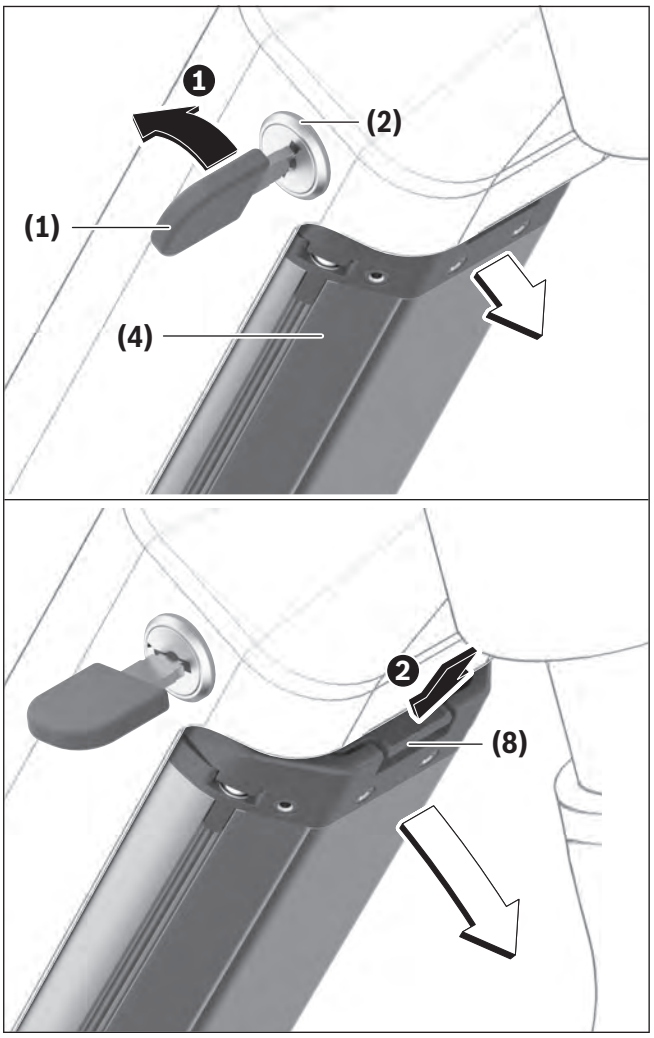

❶ To remove the PowerTube battery **(4)**, open the battery lock **(2)** using the key **(1)**. The battery will be unlocked and fall into the safety restraint **(8)**.

Note: When removing the eBike battery, hold it firmly in your hand.

❷ Hold the battery firmly and press on the safety restraint **(8)** from above. The battery will be unlocked completely and fall into your hand. Then pull the battery out of the frame.

Note: As a result of **varying** designs, the battery may need to be inserted and removed using a different method. Read the bicycle manufacturer's operating instructions for how to do this.

Inserting the PowerTube Battery (pivot) (PT500/625/750)

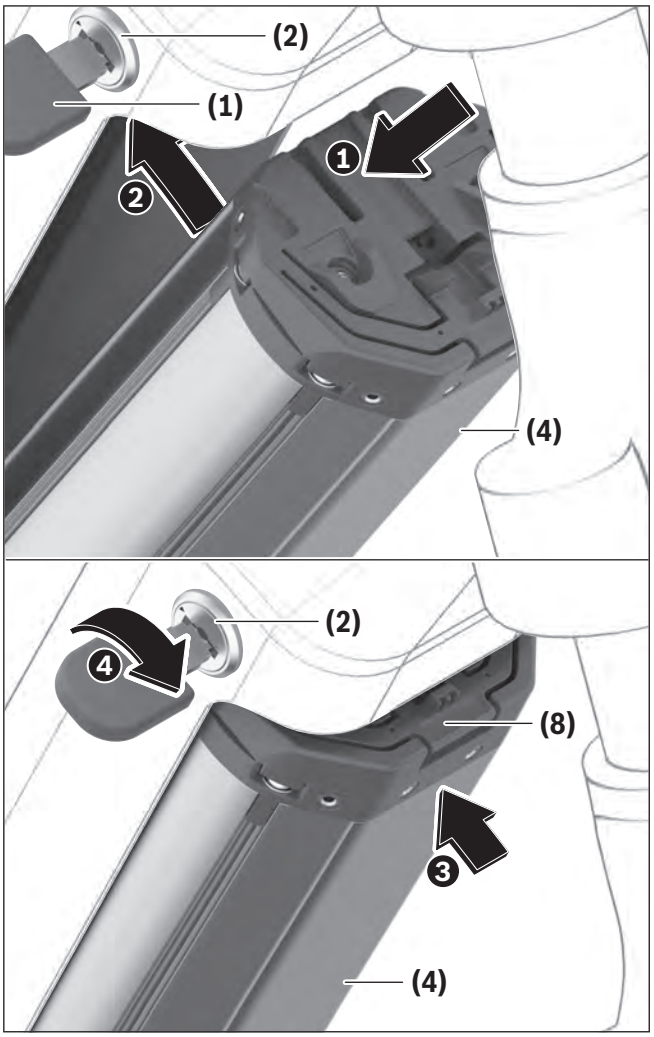

In order for the battery to be inserted, the key **(1)** must be inserted into the battery lock **(2)** and the battery lock must be open.

❶ To insert the PowerTube battery **(4)**, place it so that its contacts are in the lower holder of the frame.

❷ Hold the battery lock open with the key and swivel the battery upwards until it is held by the safety restraint **(8)**.

❸ Release the key and push the battery upwards until it audibly clicks into place.

❹ Always secure the battery by closing the battery lock **(2)** – otherwise the battery lock may open and the battery may fall out of the holder.

Always remove the key **(1)** from the battery lock **(2)** after locking it. This prevents both the key from falling out and the eBike battery from being removed by unauthorized third parties when the eBike is not in use.

Inserting the PowerTube Battery (pivot) (PT360/540/600/720/800)

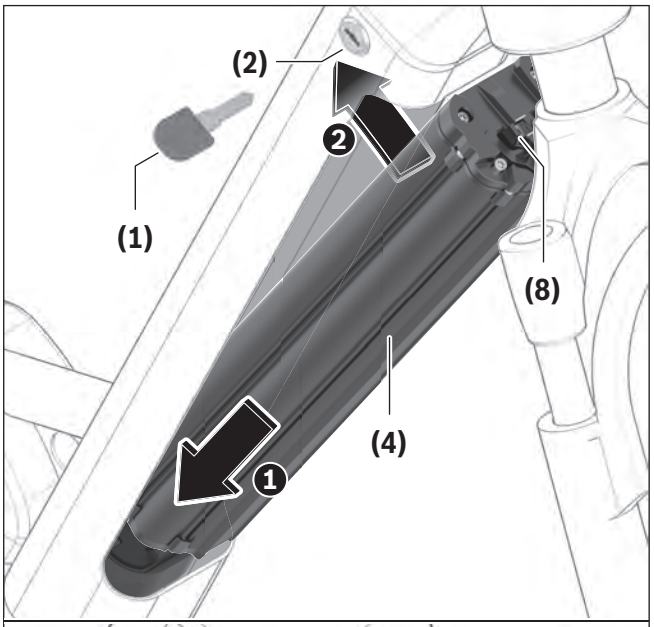

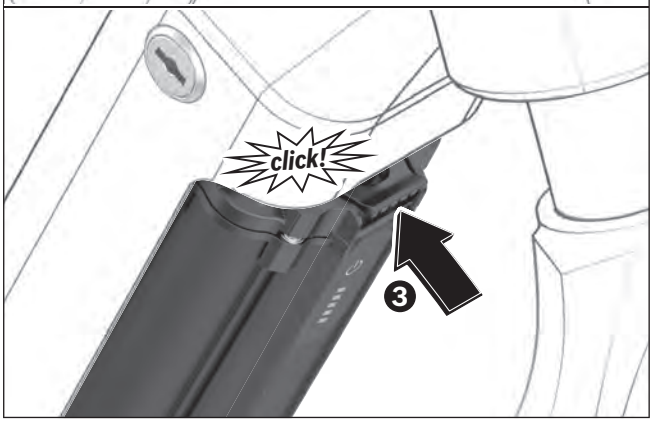

In order for the battery to be inserted, the key **(1)** must be removed from the battery lock **(2)**.

❶ To insert the PowerTube battery **(4)**, place it so that its contacts are in the lower holder of the frame.

❷ Swivel the battery upwards until it audibly clicks into place and is held by the safety restraint **(8)**.

❸ Then push the battery fully into the holder until it audibly clicks into place.

Note: As a result of **varying** designs, the battery may need to be inserted and removed using a different method. Read the bicycle manufacturer's operating instructions for how to do this.

Removing the PowerTube Battery (axial) (PT500/625/750 only)

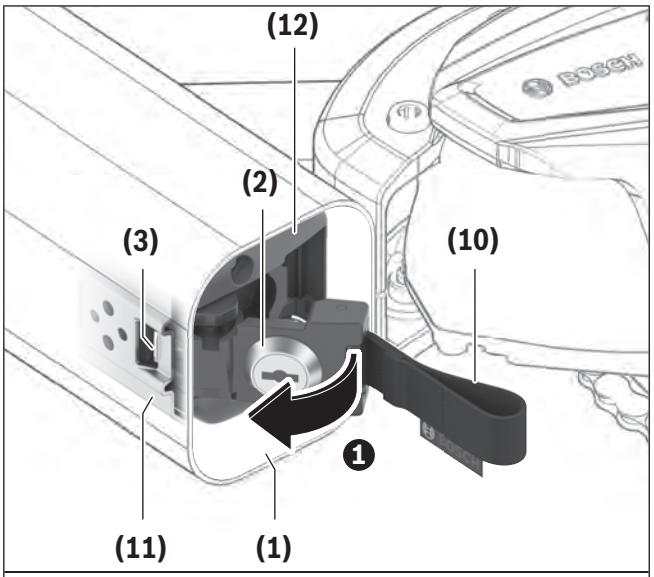

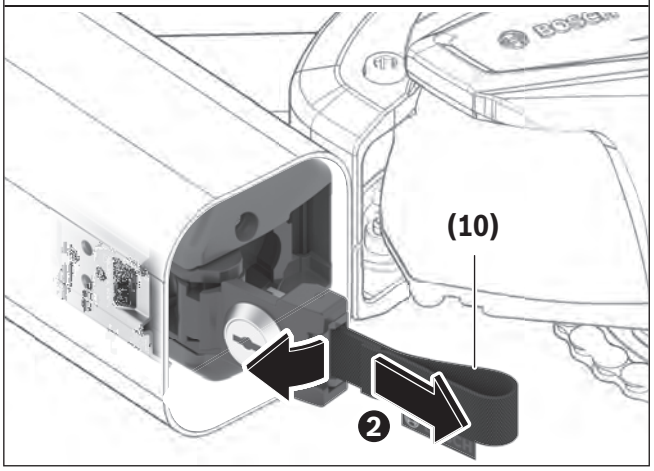

❶ To remove the PowerTube battery **(12)**, open the battery lock **(2)** using the key **(1)** and pull out the key **(1)**.

❷ Use the pull strap **(10)** to pull the battery **(12)** out of the frame and keep hold of it so that it does not fall out of the frame.

Note: As a result of **varying** designs, the battery may need to be inserted and removed using a different method. Read the bicycle manufacturer's operating instructions for how to do this.

Inserting the PowerTube Battery (axial) (PT500/625/750 only)

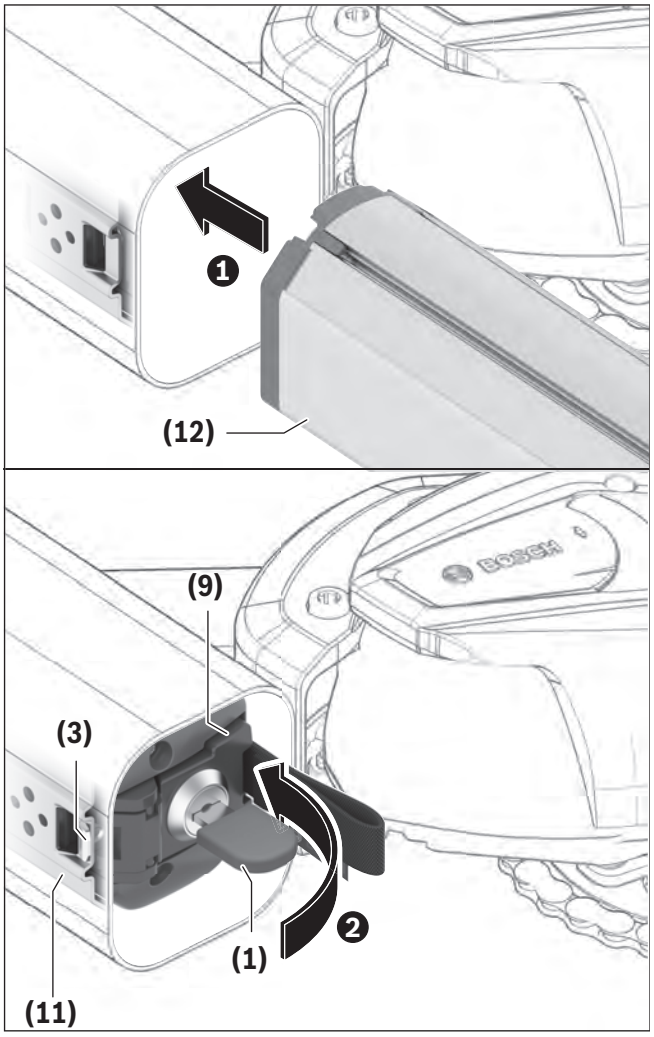

In order for the battery to be inserted, the locking mechanism **(9)** must be folded to the side. At this point, the key **(1)** must not be inserted in the battery lock **(2)**.

❶ To insert the PowerTube battery, insert it into the frame with the socket for the charging connector **(5)** facing upwards until the battery clicks into place. Ensure that the battery is aligned correctly.

❷ Close the locking mechanism **(9)**, insert the key **(1)** into the battery lock **(2)** and lock the battery. Make sure that the safety hook **(3)** is correctly hooked in at the opening of the guide rail **(11)**. Otherwise, there is a risk of the battery falling out while riding.

Always remove the key **(1)** from the battery lock **(2)** after locking it. This prevents both the key from falling out and the eBike battery from being removed by unauthorized third parties when the eBike is not in use.

CompactTube Battery (built-in)

The eBike batteries built-in to the bicycle frame must only be removed in the event of a fault. Contact a service center if this happens.

Removing the CompactTube Battery (pivot)

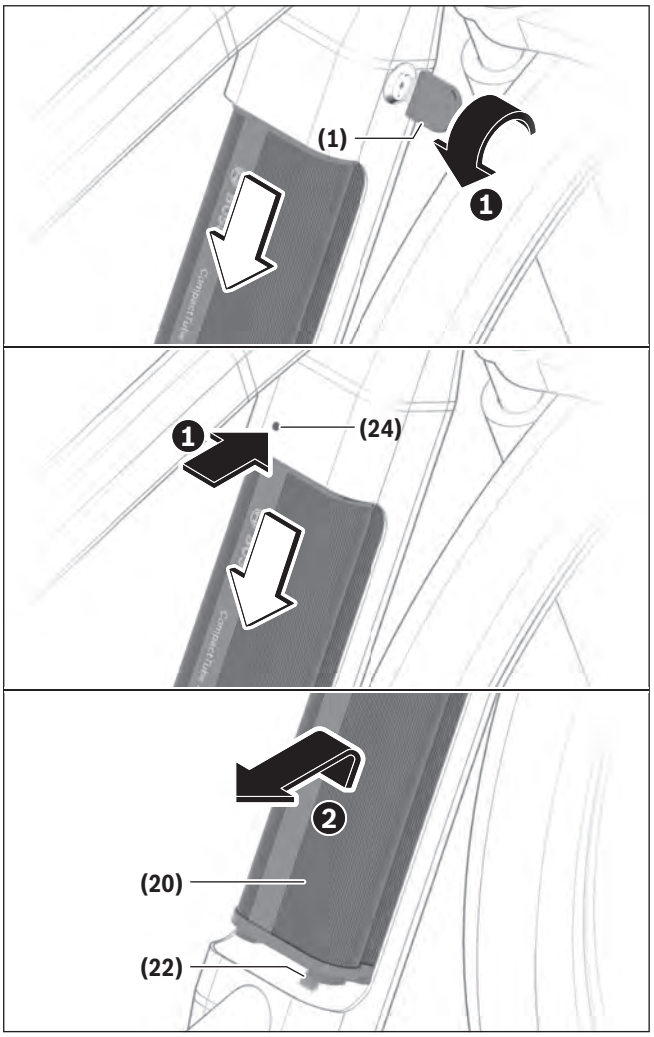

❶ To remove the CompactTube battery **(20)**, open the battery lock **(2)** with the key **(1)** or press on the unlocking element **(24)** with a suitable, non-pointed tool (e.g. a hex key). The battery will be unlocked and fall into the safety restraint **(22)**.

Note: When removing the eBike battery, hold it firmly in your hand.

❷ Hold the battery firmly, gently slide the battery towards the battery lock **(2)** and remove it from the safety restraint **(22)**.

Note: The unlocking element may vary from the image and may be a solution specific to the bicycle manufacturer. Read the bicycle manufacturer's operating instructions for how to do this.

Note: As a result of **varying** designs, the battery may need to be inserted and removed using a different method. Read the bicycle manufacturer's operating instructions for how to do this.

Inserting the CompactTube Battery (pivot)

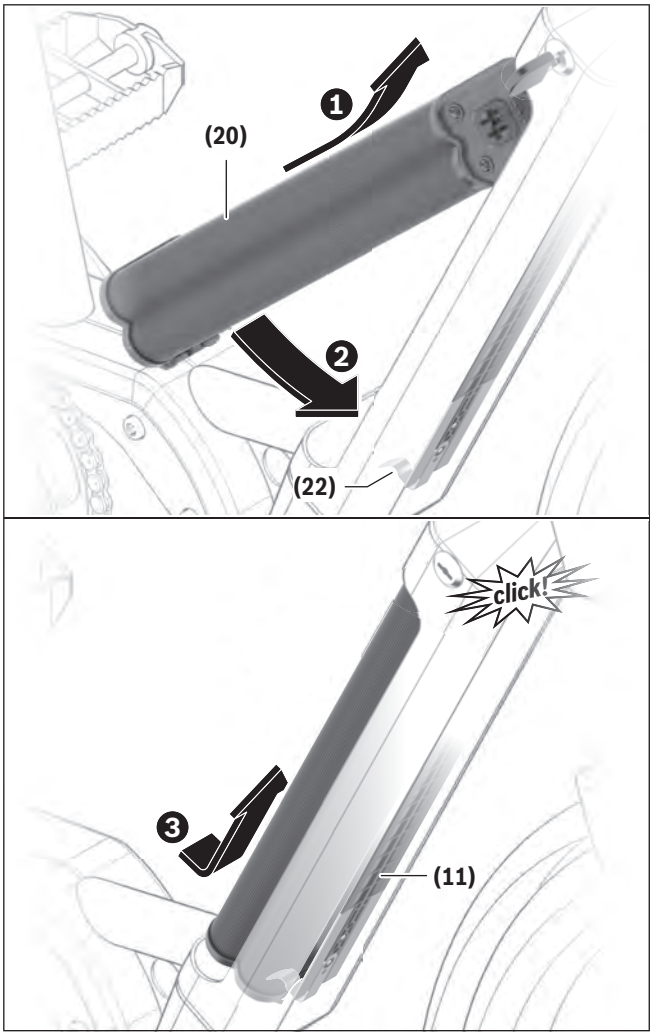

In order to insert the battery, the key **(1)** must not be inserted in the battery lock **(2)**.

❶ To insert the CompactTube battery **(20)**, place it so that its contacts are in the upper holder of the frame.

❷ Twist the battery in the bicycle frame until it is held by the safety restraint **(22)**.

❸ Push the battery into the guide rail **(11)** and slide it towards the battery lock **(2)** until it audibly clicks into place.

Removing the CompactTube Battery (axial)

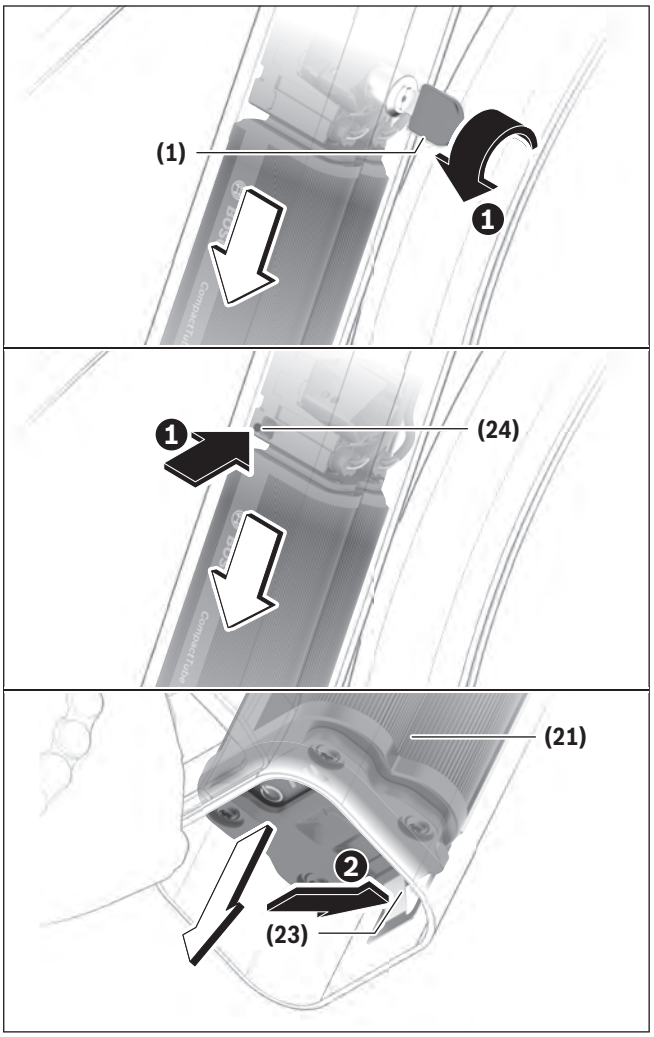

❶ To remove the CompactTube battery **(21)**, open the battery lock **(2)** with the key **(1)** or press on the unlocking element **(24)** with a suitable, non-pointed tool (e.g. a hex key). The battery will be unlocked and fall into the safety restraint **(23)**.

Note: When removing the eBike battery, hold it firmly in your hand.

❷ Press the safety restraint **(23)**. Hold the battery firmly in place if the battery is sliding out of the bicycle frame. Then remove the battery.

Note: The unlocking element may vary from the image and may be a solution specific to the bicycle manufacturer. Read the bicycle manufacturer's operating instructions for how to do this.

Note: As a result of **varying** designs, the battery may need to be inserted and removed using a different method. Read the bicycle manufacturer's operating instructions for how to do this.

Inserting the CompactTube Battery (axial)

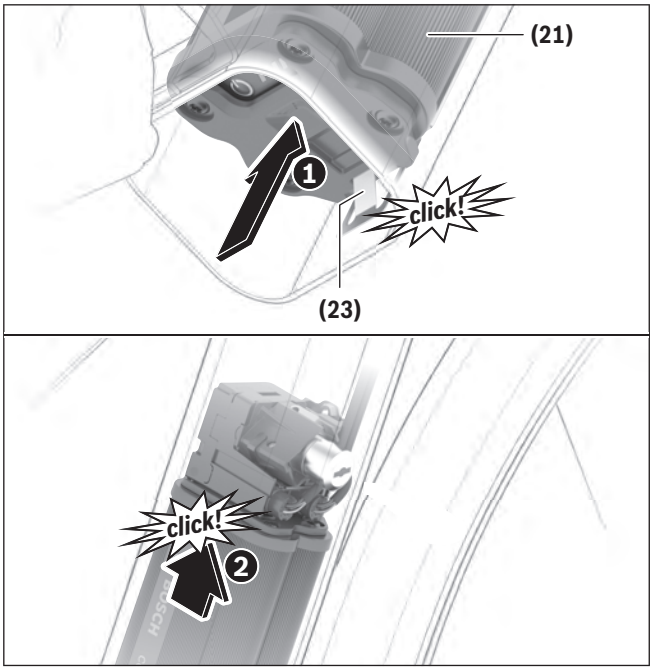

In order to insert the battery, the key **(1)** must not be inserted in the battery lock **(2)**.

❶ To insert the CompactTube battery **(21)**, insert it into the frame with the socket for the charging connector **(5)** facing upwards until you hear the battery click into place in the safety restraint **(23)**. Ensure that the battery is aligned correctly.

❷ Slide the battery into the battery lock **(2)** until you hear it click into place in the battery lock **(2)**.

Inserting and Removing the PowerPack battery

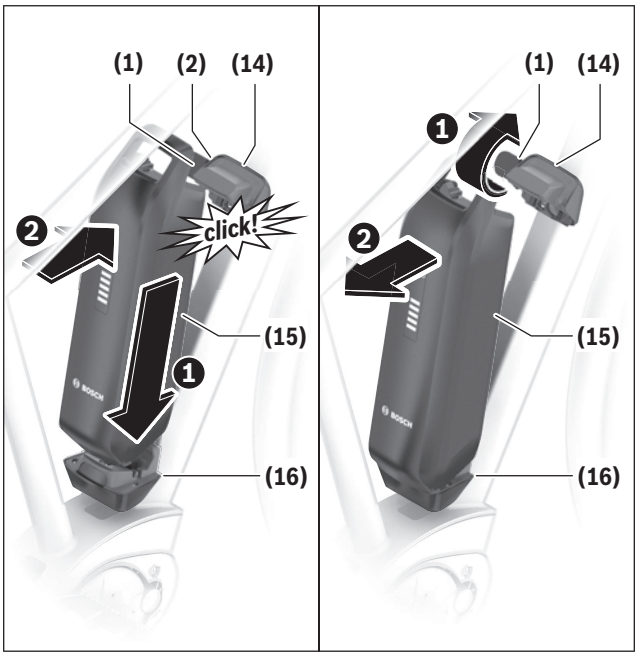

In order to insert the battery, the key **(1)** must not be inserted in the battery lock **(2)**.

❶ To **insert** the PowerPack battery **(15)**, place it so that its contacts are in the lower holder **(16)** on the eBike.

❷ Twist it into the upper holder **(14)** as far as possible until you hear it click into place.

❶ To **remove** the PowerPack battery **(15)**, switch it off and open the battery lock **(2)** using the key **(1)**.

Note: When removing the eBike battery, hold it firmly in your hand.

❷ Twist the battery out of the upper holder **(14)** and pull it out of the lower holder **(16)**.

Operation

Start-up

Switching on/off

Switching on the eBike battery is one way to switch on the eBike (does not apply to permanently installed eBike batteries). To do this, read and follow the instructions in the operating instructions for the drive unit and control unit.

Before switching on the eBike battery, i.e. the eBike, make sure that the battery lock **(2)** is locked.

To **switch on** the eBike battery, press the on/off button **(7)**. Do not use sharp or pointed objects to press the button.

Note: The eBike battery charge indicator **(6)** switches back off as soon as the eBike battery is switched on.

- ▸ **Always check that the battery pack is locked in place.** To do this, pull on the battery pack (after the key has been removed).

To **switch off** the eBike battery, press the on/off button **(7)** again. This will also switch the eBike off.

If no drive assistance is requested for about **10** minutes (e.g. because the eBike is not moving) and no button is pressed on the display or the control unit of the eBike, the eBike will switch off automatically.

The eBike battery is protected against deep discharge, overloading, overheating and short-circuiting by the Battery Management System (BMS). In the event of danger, a protective circuit switches the eBike battery off automatically.



If a fault is detected in the eBike battery, two of the LEDs on the battery charge indicator **(6)** will flash. Contact a service center if this happens.

Behavior in the event of a fault

The eBike battery should not be opened. There is a risk of the eBike battery catching fire, e.g. as a result of a short circuit. This risk continues to apply for any Bosch eBike battery that has **ever** been opened, even at a later point in time.

In the event of a fault, contact a service center.

Transport

- ▸ **If you transport your eBike attached to the outside of your car, e.g. on a bike rack, remove the display and the eBike battery (exception: Built-in eBike battery) to avoid damaging them.**

The eBike batteries are subject to legislation on the transport of dangerous goods.

When batteries are transported by commercial users or third parties (e.g. air transport or forwarding agency), special requirements on packaging and labeling must be met. When preparing items for shipping, dangerous goods experts can be consulted as required.

Do not ship or transport a damaged battery or attempt to circumvent laws regarding shipping of Lithium-Ion batteries. Failure to follow this warning may lead to a fire during the transportation process, resulting in serious personal injury or death to transportation workers or the public, and damage to vehicles or transportation facilities for which you may be held civilly and criminally responsible.

- ▸ **Always use an approved and compatible bicycle rack when transporting your eBike. The Bosch drive system adds weight to the bicycle.** Refer to your bicycle rack manual to be sure your eBike is compatible. Overloading a bike rack can result in death or serious injury.
- ▸ **Use proper lifting techniques as electric bikes are generally heavier than bicycles.**

Maintenance/cleaning

- **Always switch the battery pack off, when inserting or removing it from the holder.** Never attempt to insert or remove the battery pack while riding the bike.

⚠ WARNING

- **Do not open or deform the battery housing and/or perform any modifications or service to the battery. There are no user-serviceable components in the battery pack.** Opening a Lithium- Ion battery may result in a hazardous condition.
- **Do not submerge your eBike components in water, or wash with pressurized hose.** Your Bosch battery pack is designed to be water tight to rain water or non-pressure hose washing.
- **Note down the manufacturer and the number of the key.** In case of loss of the keys, please refer to an authorised Bosch eBike dealer. Please provide the name of the manufacturer and the number of the key.
- **Do not apply any cleaning agents, paint or chemicals to any components of the Bosch drive system as they may cause premature failure of the component.**

Cleaning

- **Do not submerge your eBike components in water, or wash with pressurized hose.** Your Bosch battery pack is designed to be water tight to rain water or non-pressure hose washing.

Keep all components of your eBike clean, especially the battery pack contacts and corresponding holder contacts. All components including the drive unit may not be immersed in water or cleaned with a high-pressure cleaner. Clean them carefully with a soft, damp cloth (using only mild soap and water).

Keep the eBike battery clean and protect it from contact with skincare products, sun cream, insect repellent, and other chemicals or substances. Only use a soft cloth dampened only with water for cleaning.

Clean and lightly grease the connector pins occasionally. Use medical or technical Vaseline for this purpose.

Please contact a service center if the eBike battery is no longer working.

After-sales service and advice on using products

If you have any questions about the eBike batteries, contact a service center.

- **Note down the key manufacturer and number on the key (1).** Contact a service center if you lose the key. Give them the name of the key manufacturer and the number on the key.

For contact details of service centers, please visit www.bosch-ebike.com.

More information



More information and videos about the eBike components and their functions can be found in the Bosch eBike Help Center.

Storing

The service life of the eBike battery can be extended if it is looked after well and especially if it is stored at the correct temperature.

As it ages, however, the capacity of the eBike battery will diminish, even with good care.

A significantly reduced operating period after charging indicates that the eBike battery pack is worn out and must be replaced. You can replace it yourself by purchasing a genuine Bosch PowerPack from an authorized Bosch eBike dealer.

Recharging the eBike Battery Before and During Storage

When you are not going to use the eBike battery for an extended period (> 3 months), store it at a state of charge of around 30 % to 60 % (when 2 to 3 of the LEDs on the battery charge indicator **(6)** are lit).

Check the state of charge after 6 months. If the state of charge is below 30 %, recharge the eBike battery to between approximately 30 % and 60 %.

Check the state of charge of the permanently installed eBike battery on the control unit or on the display.

Note: If the eBike battery is stored with no charge for an extended period of time, it may become damaged despite the low self-discharge and the battery capacity could be significantly reduced.

Storage conditions

If possible, store the eBike battery in a dry, well-ventilated place. Protect it against moisture and water. When the weather conditions are bad, it is advisable to remove the eBike battery from the eBike and store it in a closed room, for example, until you use it next.

If the battery is integrated in the frame, the whole eBike should be stored indoors.

Do **not** store the eBike battery in the following locations:

- In areas without smoke alarms
- Near combustible or easily flammable objects
- Near room radiators and other heat sources
- In locked vehicles (especially in the summer)
- In direct sunlight

It is recommended to store the eBike battery in a temperature range of **50 °F (10 °C)** to **68 °F (20 °C)**.

Never store them at temperatures below **+14 °F (−10 °C)** or above **140 °F (60 °C)**.

Make sure that the maximum storage temperature is not exceeded.

It is recommended not to leave the eBike battery on the eBike during storage (does not apply to permanently installed eBike batteries).

Troubleshooting

Note: For built-in eBike batteries, you can see the errors present on the **eBike Flow** app. Please adhere to the specifications stored on the **eBike Flow** app.

Cause	Corrective measures
 eBike battery defective	**Two LEDs flashing on the eBike battery.** Contact a service center.
 eBike battery too warm or too cold	**Three LEDs flashing on the eBike battery.** Disconnect the eBike battery from the charger until the charging temperature range has been reached. Do not reconnect the eBike battery to the charger until it has reached the correct charging temperature.
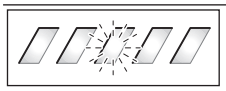 The charger is not charging.	**One LED flashing on the eBike battery.** Contact a service center.
 The charger is not charging.	**No LEDs flashing (one or more LEDs will remain permanently lit depending on the state of charge of the eBike battery).** Contact a service center.
Charging not possible (no indicator on eBike battery)	
Connector not attached properly	Check all connections.
eBike battery contacts dirty	Carefully clean the eBike battery contacts.
Outlet, cable or charger defective	Check the mains voltage, have the charger checked over by a service center.
eBike battery defective	Contact a service center.

Recycling Program



eBike batteries, accessories and packaging should be disposed of in an environmentally correct manner.

Do not dispose of eBikes and their components with household waste.

Do not dispose of an eBike battery or any other Lithium- Ion battery in your regular household trash or a public trash receptacle. Batteries that enter the regular waste stream can be damaged, leading to a fire resulting in serious injury, death, property damage and environmental contamination.

Tape or mask off the contact surfaces of the battery pack's terminals with adhesive tape before disposing of battery packs.

Do not touch severely damaged eBike batteries with your bare hands – electrolyte may escape and cause skin irritation. Store the defective battery in a safe location outdoors. Cover the terminals if necessary and inform your specialist retailer. Your specialist retailer will help you to dispose of it properly.



You may recycle your Bosch battery pack by calling 1.800.822.8837.

Robert Bosch GmbH
72757 Reutlingen
Germany

www.bosch-ebike.com

kontakt@bosch.de

0 275 U07 3PX (2026.03) T / 86

PowerMore 250

BBP3625 | BBP3628



en Original operating instructions

This manual contains important safety, performance and service information. Read and understand it along with the information provided to you by your bicycle manufacturer before using the product, and keep it for reference.

Table of Contents

Introduction 2
About Warnings 2
General Warnings 2
Using your Manual 3
On-product warning labels 4
Handling the Lithium-Ion Battery Pack 5
Safety warnings for Bosch eBike batteries 5
Product description and specifications 8
Fitting 10
Operation 13
Transport 14
Maintenance/cleaning 15
Troubleshooting 16
Recycling Program 17

Introduction

Some content is published under license from the **PeopleForBikes Coalition, LTD**.

About Warnings

This manual contains many **DANGER**, **WARNING** and **CAUTION** indicators concerning the consequences of failure to use, assemble, maintain, store, inspect and dispose of a Bosch-equipped eBike in a safe manner.

– The combination of the safety alert symbol and the word **DANGER** indicates a hazardous situation that, if not avoided, will result in death or serious injury.
– The combination of the safety alert symbol and the word **WARNING** indicates a hazardous situation that, if not avoided, could result in death or serious injury.
– The combination of the safety alert symbol and the word **CAUTION** indicates a hazardous situation that, if not avoided, could result in minor or moderate injury.

General Warnings



Read all safety warnings and all instructions. Failure to follow the warnings and instructions may result in death, property damage or serious injury.

Save all safety warnings and instructions for future reference.

The term **eBike battery** used in these operating instructions refers to all original Bosch eBike batteries from the system generation **the smart system**.

▶ **Read ALL accompanying manuals before riding the bike for the first time.** Your Bosch Drive System comes with additional manuals and documents provided by the manufacturer of the bicycle and other components. Failure to read and understand safety information can result in death or serious injury.

⚠ WARNING

▶ **This manual contains important safety, performance and service information.** Read it before you take the first ride on your new bicycle, and keep it for reference. The manual can also be found online at www.bosch-ebike.com.

▶ **This manual is intended to be read together with the separate user manual provided with your bicycle.** Be sure to read all provided documents including labels on the product before your first ride.

▶ **Take responsibility for your own SAFETY.** If you have any questions or do not understand something, consult with your dealer or the bicycle or component manufacturer.

▶ **Some eBike accessories may present a choking hazard to small children.** Keep these accessories away from children.

⚠ CAUTION

▶ **The Bosch Drive System adds weight to your bicycle which you may not be used to lift.** Avoid injury, use proper lifting techniques.

Using your Manual

In addition to the functions outlined here, changes to software relating to troubleshooting and functional modifications may be introduced at any time.

Graphics

The bicycle shown in this manual may differ slightly from your bicycle, but will be similar enough to help you understand our instructions.

RIGHT-HAND and LEFT-HAND sides are determined by facing in the direction the bicycle will travel when going forward. When you see a broken line (------), the item referred to is hidden from view.

On-product warning labels

▶ **Warning labels have been placed on the Bosch eBike System for your protection. Read and follow the instructions of the labels on the product carefully. If a label becomes illegible or comes off, contact your Bosch bicycle dealer to obtain a replacement.** Replacement safety labels are provided by Bosch at no charge.

⚠ WARNING

▶ **To reduce the risk of injury, explosion, or fire, the user must read the instruction manual.**
Do not crush, puncture, disassemble, short terminals, or dispose in fire.
Do not use battery once it has been impacted, sustained water damage or visibly damaged.
Charge battery only with Bosch eBike chargers.

Handling the Lithium-Ion Battery Pack

Safety warnings for Bosch eBike batteries



Read and understand all safety warnings and instructions. Failure to follow the below warnings could result in death or serious injury.

Save all safety warnings and instructions for future reference.

The term **eBike battery** used in these operating instructions refers to all original Bosch eBike batteries from the system generation **the smart system**.

The terms **drive** and **drive unit** used in these operating instructions refer to all original Bosch drive units from the system generation **the smart system**.

The term **charger** is used in these instructions to mean all original Bosch chargers from the system generation **the smart system**.

- ▶ **Read and observe the safety warnings and instructions in all operating instructions of the eBike components and your eBike.**
- ▶ **It is recommended that you periodically review this information to ensure you are following all recommendations for safe use of this product.** Improper use, storage or charging of the battery can cause thermal runaway leading to a sudden and severe fire resulting in property damage, serious injury or death.

INSTRUCTIONS PERTAINING TO RISK OF FIRE, ELECTRIC SHOCK, EXPLOSION OR INJURY

⚠ DANGER

- ▶ **Do not puncture or crush the battery pack. Do not impact or drop the battery pack or modify it in any way.** Do not use the battery pack if it shows visible damage. Danger of fire or explosion which can cause death or serious injury.



Protect the battery pack against heat (e.g., temperature > 140 °F [> 60 °C]), fire and immersing into water. Danger of explosion.

⚠ WARNING

- ▶ **Use only original Bosch battery packs approved for your eBike by the manufacturer and purchased from a credible source.** Use of non-approved or counterfeit battery packs can lead to death or serious injury.
- ▶ **Remove the eBike battery from the eBike before beginning work (e.g. inspection, repair, assembly, maintenance, work on the chain, etc.) on the eBike, transporting it by car or airplane, or storing it.** Unintentional activation of the eBike poses a risk of injury.
- ▶ **You must not remove fixed mount eBike batteries yourself. Have an authorized bicycle retailer install and remove fixed mount eBike batteries for you.**
- ▶ **Never disassemble the eBike battery.** No user serviceable parts. Risk of short-circuiting and fire.
- ▶ **When the eBike battery is not in use, keep it away from paper clips, coins, keys, nails, screws or other small metal objects that could make a connection from one terminal to another.** A short circuit between the terminals may cause burns or a fire.
- ▶ **Avoid mechanical loads and exposure to high temperatures.** These can damage the battery cells and cause the flammable contents to leak out.
- ▶ **Do not place the charger or the eBike battery near flammable materials. Ensure the eBike battery is completely dry and kept on a clean, dry, flat and non-flammable surface.** There is a risk of fire due to the heat generated during charging.

- ▶ **The eBike battery must not be left unattended while charging, especially overnight.** Once the battery is fully charged, disconnect the eBike battery from the charger and the charger from the mains.
- ▶ **Do not charge or use your eBike in any area with a potentially explosive atmosphere, such as at a fueling area, or in areas where the air contains chemicals or particles (such as grain, dust, or metal powders).** Obey all signs and instructions.
- ▶ **If used incorrectly, the eBike battery may leak fluid; avoid contact. If contact occurs, rinse off with water. If the liquid comes into contact with your eyes, seek additional medical attention.** Fluid ejected from the battery may cause skin irritation or burns.
- ▶ **eBike batteries must not be subjected to mechanical shock, excessive vibration or excessive weight from objects placed on the battery.** There is a risk of the eBike battery being damaged.
- ▶ **The eBike battery may give off fumes or smoke if it becomes damaged or is used incorrectly. Ensure the area is well ventilated and seek medical attention should you experience any adverse effects.** The fumes or smoke may irritate the respiratory system.
- ▶ **Only charge the Bosch eBike battery with a compatible charger, such as an original Bosch charger from the system generation the smart system.** You can therefore help to protect the eBike battery against damage and risks, such as overheating and short circuits.
- ▶ **Use the eBike battery only in conjunction with eBikes from the system generation the smart system.** This is the only way in which you can protect the eBike battery against dangerous overload.
- ▶ **When not in use, disconnect the cable from the PowerMore battery and from the charging socket on the eBike battery and store the cable away securely.** Failure to do so poses a serious risk of injury.
- ▶ **It is recommended to only use original Bosch eBike batteries from the system generation the smart system.**
- ▶ **Keep the battery and charger away from children and animals. Unless supervised or instructed on proper/responsible use, children or people who lack the necessary experience or understanding to operate the battery and charger safely should not be left unattended with the battery and charger.** There is a significant risk of personal injury and/or damage.

The safety of both our customers and our products is important to us. Our eBike batteries are lithium-ion batteries which have been developed and manufactured in accordance with the latest technology. We comply with or exceed the requirements of all relevant safety standards. When damaged, improperly charged or misused, Lithium-Ion batteries are susceptible to an uncontrollable energy release resulting in a sudden and severe fire. A Lithium-Ion battery fire generally cannot be put out until the energy contained therein is exhausted. Therefore, proper use, charging, discharging, care, maintenance, storage and transportation are all critical to the long-term use of the battery and the safety of the user and others.

The manual can also be found online at www.bosch-ebike.com.

- ▶ **The battery charge port terminals and/or the charger plug can get contaminated. Repeatedly connecting contaminated terminals can result in worn and damaged terminals.** Clean thoroughly before connecting the charger.
- ▶ **Do not touch the terminals of the battery or charger during an electrical storm in case of a lightning strike.**
- ▶ **Always follow charger and battery operating, charging and storage temperature.**
- ▶ **Do not use a power inverter to charge the battery from a 12-volt automobile auxiliary power outlet in a vehicle.** Incorrect or excessive voltage can result in overheating, which can damage the

battery and reduce the battery's lifespan or cause a sudden and severe fire.

- **If the battery becomes too hot, starts to emit smoke, flame or a strong odor, shows any signs of deformation/bulging/leaks/discoloration or otherwise presents unusual characteristics, discontinue use of the battery.** If a battery exhibits any of these symptoms and is failing catastrophically, evacuate the area immediately and call fire authorities. Only if possible to do so safely and quickly should you attempt to move the battery outdoors and away from people and flammable materials.

Privacy notice

When connecting the eBike to the **Bosch DiagnosticTool 3** or when exchanging eBike components, technical information about your eBike (e.g. bicycle manufacturer, model, bike ID, configuration data) as well as regarding the use of the eBike (e.g. total travel time, energy consumption, temperature) is transmitted to Bosch eBike Systems (Robert Bosch GmbH) for processing your request, in service cases and for the purposes of product improvement. You can find further information about data processing at www.bosch-ebike.com/privacy-full.

Product description and specifications

Product Features

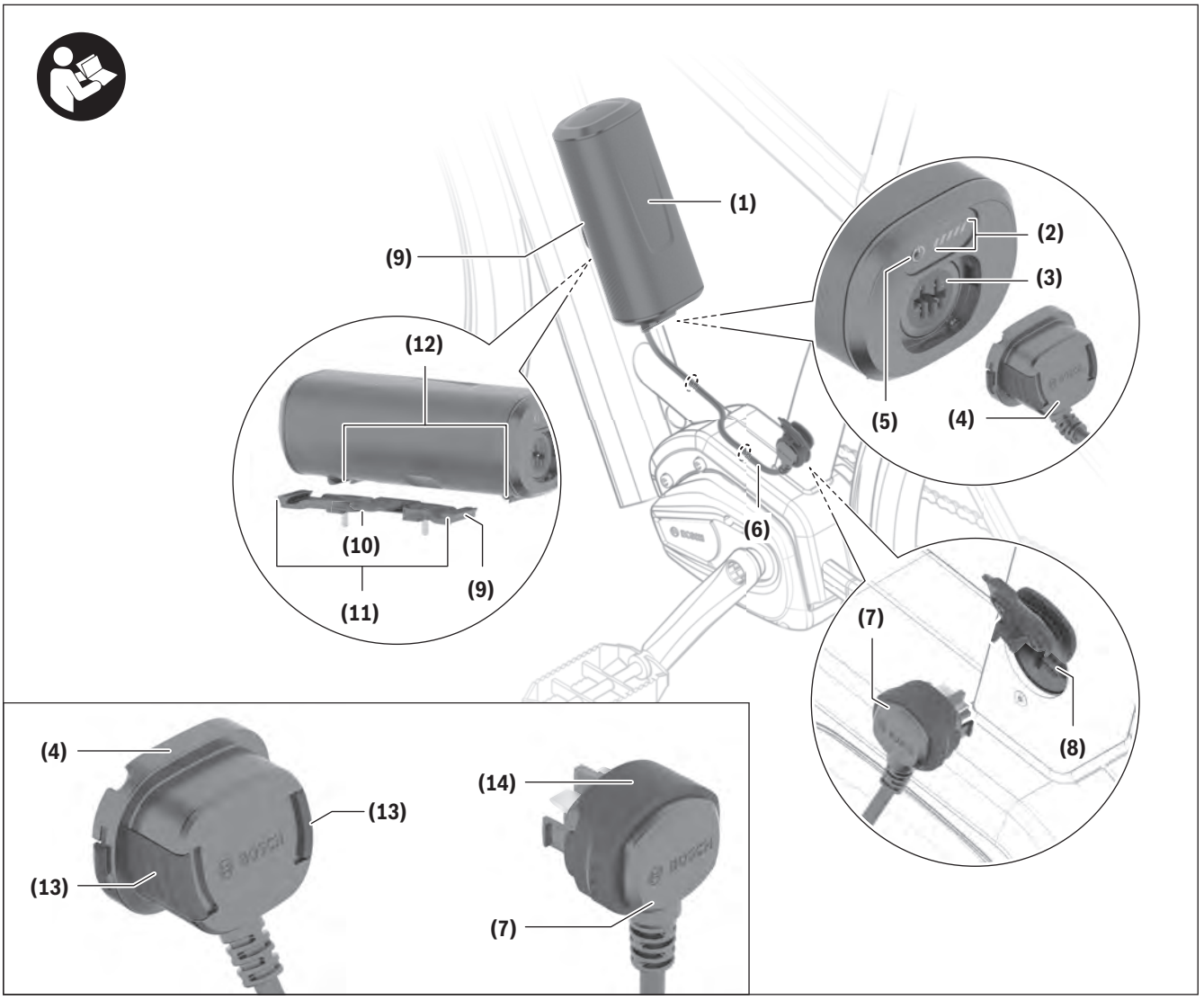

All representations of bike components are schematic and can deviate from your eBike.

(1) PowerMore battery
(2) Operation/battery charge indicator
(3) PowerMore battery connection socket
(4) PowerMore battery cable connector
(5) On/off button
(6) PowerMore battery cable
(7) eBike charging socket cable connector
(8) eBike charging socket
(9) PowerMore battery holder
(10) Release button for PowerMore battery holder
(11) Guide rail for PowerMore battery holder
(12) Guide grooves for PowerMore battery

(13) Release buttons for PowerMore battery cable connector

(14) Release mechanism for eBike charging socket cable connector

Intended Use

The Bosch eBike batteries from the system generation **the smart system** are intended exclusively for the power supply of your drive unit from the system generation **the smart system** and must not be used for any other purpose.

Only the manufacturer-approved cable may be used to connect the eBike battery.

Technical Data

Li-ion battery		PowerMore 250
Product code		BBP3625 BBP3628
Rated voltage	V	36
Nominal capacity	Ah	6.7
Energy	Wh	250[A)]
Operating temperature	°F °C	+23 to +104 −5 to +40
Storage temperature	°F °C	+50 to +104 +10 to +40
Permitted charging temperature range	°F °C	+32 to +104 0 to +40
Weight, approx.	lbs kg	3.3 1.5
Protection rating		IP55

A) Advertised battery energy capacity is an approximation. Due to manufacturing tolerances measured capacity may not always match the advertised capacity.

Fitting

- ▸ **Ensure the eBike battery is placed on clean surfaces only.** Avoid getting dirt, e.g. sand or soil, in the charging socket and contacts in particular.
- ▸ **The PowerMore battery is only permitted for installation on eBikes that the bicycle manufacturer has designed specifically for such batteries.** Check whether your eBike is compatible for use with the PowerMore battery. Consult the operating instructions of the bicycle manufacturer. If you have any questions or need further information, contact a service center.
- ▸ **The eBike battery may only be used in the battery holder on the eBike.**

Note: An eBike may also be fitted with 2 eBike batteries. Consult the operating instructions of the bicycle manufacturer. If you have any questions or need further information, contact a service center.

Note: Align the bracket **(9)** with the **TOP**mark facing up on the eBike frame.

Note: The PowerMore battery is only permitted for installation on the guide rails provided **(11)**. The guide rails **(11)** are only permitted for use with the PowerMore battery and the compatible bottle holder. Consult the specifications of the bicycle manufacturer.

Note: When laying the cable, follow the specifications of the bicycle manufacturer. If you have any questions or need further information, contact a service center.

Testing the eBike Battery Before Use

Test the eBike battery before charging it for the first time or using it in your eBike.

To do this, press the on/off button **(5)** to switch the eBike battery on. If none of the LEDs on the battery charge indicator **(2)** lights up, the eBike battery may be damaged.

If at least one (but not all) of the LEDs on the battery charge indicator **(2)** lights up, the eBike battery will need to be fully charged before using it for the first time.

- ▸ **Do not charge or use eBike batteries if they are damaged.** Contact a service center.

Charging the eBike Battery

Note: The eBike battery is supplied partially charged. To ensure full capacity of the eBike battery, fully charge the battery in the charger before using it for the first time.

To charge the eBike battery, read and follow the instructions in the operating manual for the charger.

The eBike battery can be charged at any state of charge. Interrupting the charging process does not damage the eBike battery.

The eBike battery has a temperature monitoring function that only allows it to be charged within a temperature range of **32 °F (0 °C)** to **104 °F (40 °C)**.



If the temperature of the eBike battery is outside this charging range, three of the LEDs on the battery charge indicator **(2)** will flash. Disconnect the eBike battery from the charger and let it reach the correct temperature range.

Do not reconnect the eBike battery to the charger until it has reached the correct charging temperature.

Battery charge indicator outside of the eBike

Note: The PowerMore battery charge indicator **(2)** switches back off as soon as the eBike battery is switched on.

The five LEDs on the battery charge indicator **(2)** show the battery's state of charge when the eBike battery is switched on.

Each LED represents approximately 20 % of the charging capacity. When the eBike battery is fully charged, all five LEDs will be lit.

The eBike battery's state of charge when switched on is also shown on the display. Read and follow the operating instructions for the drive unit and display.

If the eBike battery's capacity is less than 10 %, the last remaining LED will flash.

Once charging is complete, disconnect the eBike battery from the charger and the charger from the mains.

Laying the Cable on the PowerMore Battery Holder

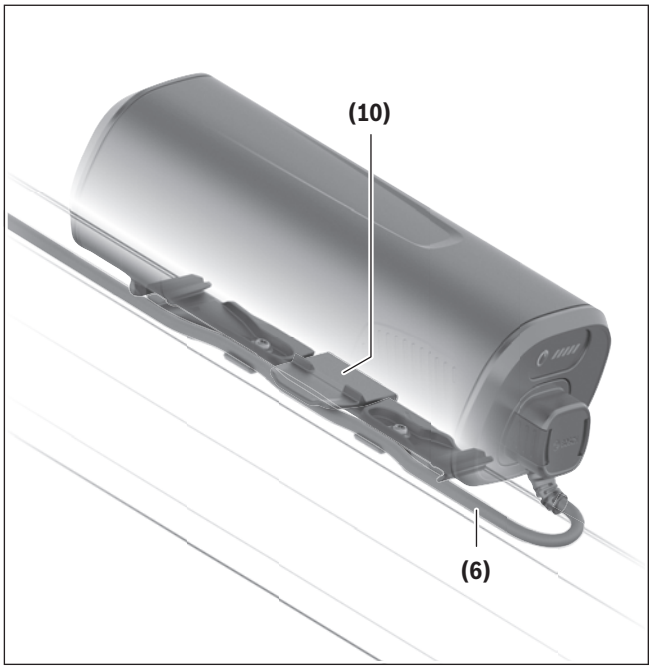

Note: When laying the cable **(6)**, make sure that the cable **(6)** is fed under the release button **(10)**. This prevents the release button **(10)** from being pressed accidentally and causing the PowerMore battery to be released.

Inserting and Removing the PowerMore Battery

- ▸ **When inserting the battery into the holder or removing it from the holder, always switch off the eBike battery and the eBike beforehand.**
- ▸ **Once you have inserted the eBike battery, check that it is correctly positioned and secure in all directions.**
- ▸ **Only leave the PowerMore battery with the cable connected to the eBike.**
- ▸ **Once the PowerMore battery is installed, the connection socket of the battery must not face upwards.**
- ▸ **Do not remove the battery from the eBike during the charging process.** If the battery has to be removed, first end the charging process before removing the battery from the eBike, then once the battery is in a proper state for charging, restart the charging process.

Inserting the PowerMore Battery

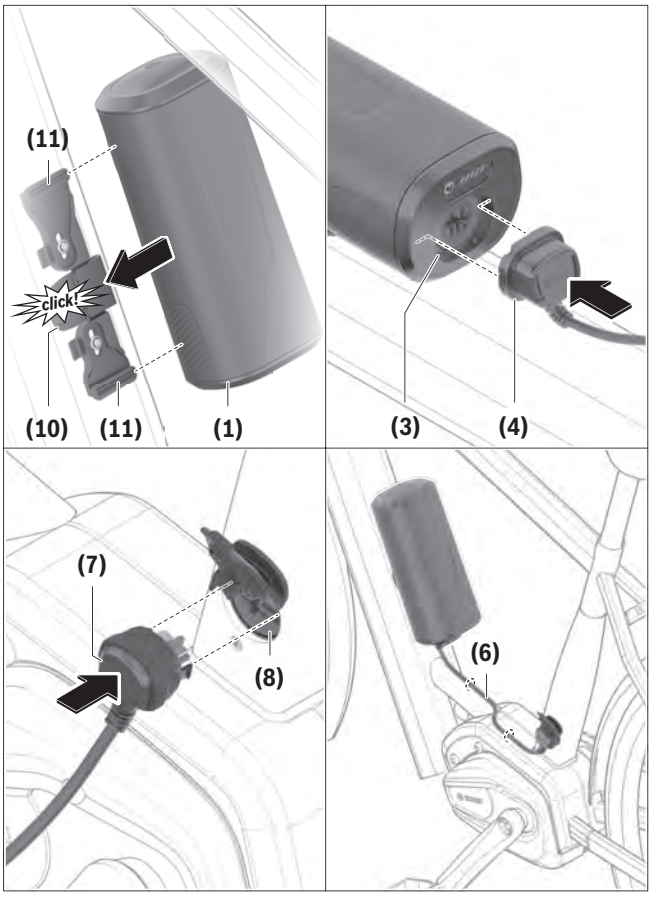

To **insert** the battery **(1)**, place its guide grooves **(12)** onto the guide rails **(11)**. Ensure that the battery is aligned correctly and that the battery is positioned in both guide rails. Slide the battery **(1)** into the holder **(9)** until it audibly clicks into place.

Insert the cable connector **(4)** into the connection socket **(3)**. Ensure that the cable connector **(4)** is aligned correctly.

Insert the cable connector **(7)** into the eBike charging socket **(8)**. Ensure that the cable connector **(7)** is aligned correctly.

Secure the cable **(6)** in place as directed by the bicycle manufacturer (e.g. with cable clips).

Removing the PowerMore Battery

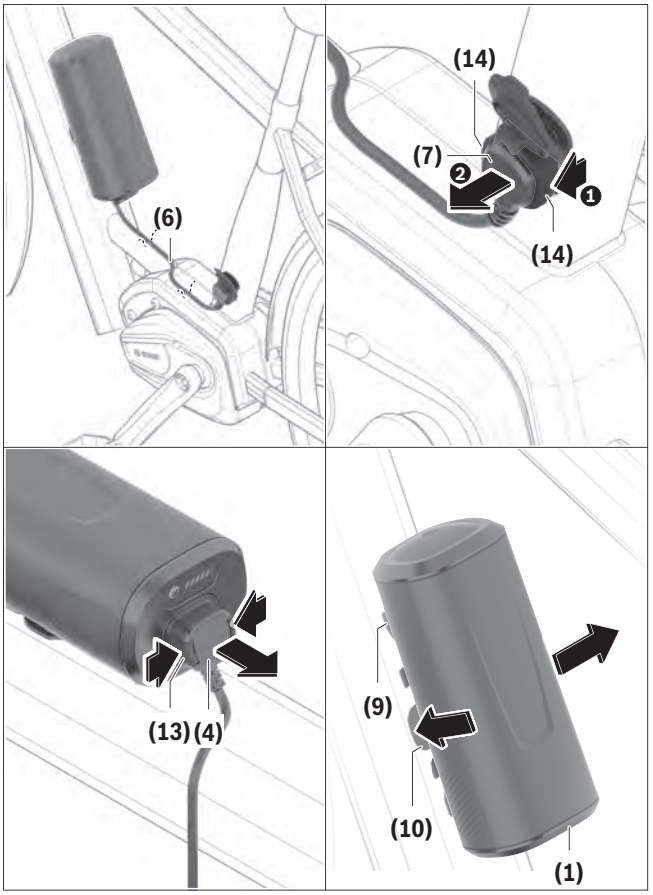

Firstly, disconnect the cable **(6)** by opening the cable lock as directed by the bicycle manufacturer.

Pull the release mechanism **(14)** towards you ❶ and remove the cable connector **(7)** from the eBike charging socket ❷.

Carefully cover the eBike charging socket with the flap to prevent dirt or water from entering.

Press the release buttons **(13)** and remove the cable connector **(4)** from the connection socket.

To **remove** the battery **(1)**, press the release button **(10)** and pull the battery **(1)** sideways out of the holder **(9)**.

Note: As a result of **varying** designs, the PowerMore battery may need to be inserted and removed using a different method. Read the bicycle manufacturer's operating instructions for how to do this.

Operation

Start-up

Note: The PowerMore battery can be used as the sole battery on the eBike. Please note that, due to the reduced capacity, both the range and performance of the drive unit will be reduced.

Switching on/off

Switching on the eBike battery is one way to switch on the eBike. To do this, read and follow the instructions in the operating manuals for the drive unit and control unit.

Once the PowerMore battery is connected to the eBike via the PowerMore cable, the eBike can be switched on/off via the on/off button **(5)**. Do not use sharp or pointed objects to press the button.

To **switch off** the eBike battery, press the on/off button **(5)** again. This will also switch the eBike off.

If no drive assistance is requested for about **10** minutes (e.g. because the eBike is not moving) and no button is pressed on the display or the control unit of the eBike, the eBike will switch off automatically.

The eBike battery is protected against deep discharge, overloading, overheating and short-circuiting by the Battery Management System (BMS). In the event of danger, a protective circuit switches the eBike battery off automatically.



If a fault is detected in the eBike battery, two of the LEDs on the battery charge indicator **(2)** will flash. Contact a service center if this happens.

Recommendations for Optimal Handling of the eBike Battery

The service life of the eBike battery can be extended if it is looked after well and especially if it is stored at the correct temperature.

As it ages, however, the capacity of the eBike battery will diminish, even with good care.

A significantly reduced operating time after charging indicates that the eBike battery has deteriorated. The eBike battery should be replaced.

Recharging the eBike Battery Before and During Storage

When you are not going to use the eBike battery for an extended period (longer than three months), store it at a state of charge of around 30 % to 60 % (when two to three of the LEDs on the battery charge indicator **(2)** are lit).

Check the state of charge after six months. If only one of the LEDs on the battery charge indicator **(2)** is lit, charge the eBike battery back up to around 30 % to 60 %.

Note: If the eBike battery is stored with no charge for an extended period of time, it may become damaged despite the low self-discharge and the battery capacity could be significantly reduced.

Leaving the eBike battery permanently connected to the charger is not recommended.

Storage conditions

If possible, store the eBike battery in a dry, well-ventilated place. Protect it against moisture and water. When the weather conditions are bad, it is advisable to remove the eBike battery from the eBike and store it in a closed room, for example, until you use it next.

If the battery is integrated in the frame, the whole eBike should be stored indoors.

Do **not** store the eBike battery in the following locations:

- In areas without smoke alarms
- Near combustible or easily flammable objects
- Near room radiators and other heat sources
- In locked vehicles (especially in the summer)
- In direct sunlight

It is recommended to store the eBike battery in a temperature range of **50 °F (10 °C)** to **68 °F (20 °C)**.

Never store them at temperatures below **+14 °F (−10 °C)** or above **140 °F (60 °C)**.

Make sure that the maximum storage temperature is not exceeded.

- ▶ **Keep the battery and the charge port connectors (terminals or pins) dry, clean and free of debris. Make sure the battery and charger have no items covering or placed on top of them.**

Behavior in the event of a fault

The eBike battery should not be opened. There is a risk of the eBike battery catching fire, e.g. as a result of a short circuit. This risk continues to apply for any Bosch eBike battery that has **ever** been opened, even at a later point in time.

In the event of a fault, contact a service center.

Transport

- ▶ **If you transport your eBike attached to the outside of your car, e.g. on a bike rack, remove the display and the eBike battery (exception: Built-in eBike battery) to avoid damaging them.**

The eBike batteries are subject to legislation on the transport of dangerous goods.

When batteries are transported by commercial users or third parties (e.g. air transport or forwarding agency), special requirements on packaging and labeling must be met. When preparing items for shipping, dangerous goods experts can be consulted as required.

Do not ship or transport a damaged battery or attempt to circumvent laws regarding shipping of lithium-ion batteries. Failure to follow this warning may lead to a fire during the transportation process, resulting in serious personal injury or death to transportation workers or the public, and damage to vehicles or transportation facilities for which you may be held civilly and criminally responsible.

- ▶ **Always use an approved and compatible bicycle rack when transporting your eBike. The Bosch drive system adds weight to the bicycle.** Refer to your bicycle rack manual to be sure your eBike is compatible. Overloading a bike rack can result in death or serious injury.
- ▶ **Use proper lifting techniques as electric bikes are generally heavier than bicycles.**

Maintenance/cleaning

⚠ WARNING

- ▸ **Do not open or deform the battery housing and/or perform any modifications or service to the battery. There are no user-serviceable components in the battery pack.** Opening a Lithium- Ion battery may result in a hazardous condition.
- ▸ **Always switch the battery pack off, when inserting or removing it from the holder.** Never attempt to insert or remove the battery pack while riding the bike.
- ▸ **Do not submerge your eBike components in water, or wash with pressurized hose.** Your Bosch battery pack is designed to be water tight to rain water or non-pressure hose washing.
- ▸ **Note down the manufacturer and the number of the key.** In case of loss of the keys, please refer to an authorised Bosch eBike dealer. Please provide the name of the manufacturer and the number of the key.
- ▸ **Do not apply any cleaning agents, paint or chemicals to any components of the Bosch drive system as they may cause premature failure of the component.**

Cleaning

- ▸ **Do not submerge your eBike components in water, or wash with pressurized hose.** Your Bosch battery pack is designed to be water tight to rain water or non-pressure hose washing.

Keep all components of your eBike clean, especially the battery pack contacts and corresponding holder contacts. All components including the drive unit may not be immersed in water or cleaned with a high-pressure cleaner. Clean them carefully with a soft, damp cloth (using only mild soap and water).

Keep the eBike battery clean and protect it from contact with skincare products, sun cream, insect repellent, and other chemicals or substances. Only use a soft cloth dampened only with water for cleaning.

Clean and lightly grease the connector pins occasionally. Use medical or technical Vaseline for this purpose.

Please contact a service center if the eBike battery is no longer working.

After-sales service and advice on using products

If you have any questions about the eBike batteries, contact a service center.

For contact details of service centers, please visit www.bosch-ebike.com.

More information

More information and videos about the eBike components and their functions can be found in the Bosch eBike Help Center.

Troubleshooting

Note: For built-in eBike batteries, you can see the errors present on the **eBike Flow** app. Please adhere to the specifications stored on the **eBike Flow** app.

Cause	Corrective measures
 eBike battery defective	**Two LEDs flashing on the eBike battery.** Contact a service center.
 eBike battery too warm or too cold	**Three LEDs flashing on the eBike battery.** Disconnect the eBike battery from the charger until the charging temperature range has been reached. Do not reconnect the eBike battery to the charger until it has reached the correct charging temperature.
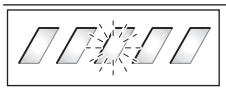 The charger is not charging.	**One LED flashing on the eBike battery.** Contact a service center.
 The charger is not charging.	**No LEDs flashing (one or more LEDs will remain permanently lit depending on the state of charge of the eBike battery).** Contact a service center.
Charging not possible (no indicator on eBike battery)	
Connector not attached properly	Check all connections.
eBike battery contacts dirty	Carefully clean the eBike battery contacts.
Outlet, cable or charger defective	Check the mains voltage, have the charger checked over by a service center.
eBike battery defective	Contact a service center.

Recycling Program



eBike batteries, accessories and packaging should be disposed of in an environmentally correct manner.

Do not dispose of eBikes and their components with household waste.

Do not dispose of an eBike battery or any other Lithium- Ion battery in your regular household trash or a public trash receptacle. Batteries that enter the regular waste stream can be damaged, leading to a fire resulting in serious injury, death, property damage and environmental contamination.

Tape or mask off the contact surfaces of the battery pack's terminals with adhesive tape before disposing of battery packs.

Do not touch severely damaged eBike batteries with your bare hands – electrolyte may escape and cause skin irritation. Store the defective battery in a safe location outdoors. Cover the terminals if necessary and inform your specialist retailer. Your specialist retailer will help you to dispose of it properly.



You may recycle your Bosch battery pack by calling 1.800.822.8837.

Robert Bosch GmbH
72757 Reutlingen
Germany

www.bosch-ebike.com

kontakt@bosch.de

0 275 U07 3RE (2026.02) T / 55

2A Charger | 4A Charger

BPC3210 | BPC3410



en Original operating instructions

This manual contains important safety, performance and service information. Read and understand it along with the information provided to you by your bicycle manufacturer before using the product, and keep it for reference.

Table of Contents

Introduction 2
About Warnings 2
General Warnings 2
Using your Manual 3
On-Product Warning Labels Charger 4
Operating the Charger 5
Safety Instructions 5
Product Description and Specifications 8
Operation 10
Maintenance/cleaning 12
Troubleshooting 13
Recycling Program 14

Introduction

Some content is published under license from the **PeopleForBikes Coalition, LTD**.

About Warnings

This manual contains many **DANGER**, **WARNING** and **CAUTION** indicators concerning the consequences of failure to use, assemble, maintain, store, inspect and dispose of a Bosch-equipped eBike in a safe manner.

– The combination of the safety alert symbol and the word **DANGER** indicates a hazardous situation that, if not avoided, will result in death or serious injury.
– The combination of the safety alert symbol and the word **WARNING** indicates a hazardous situation that, if not avoided, could result in death or serious injury.
– The combination of the safety alert symbol and the word **CAUTION** indicates a hazardous situation that, if not avoided, could result in minor or moderate injury.

General Warnings



Read all safety warnings and all instructions. Failure to follow the warnings and instructions may result in death, property damage or serious injury.

Save all safety warnings and instructions for future reference.

The term **eBike battery** used in these operating instructions refers to all original Bosch eBike batteries from the system generation **the smart system**.

▶ **Read ALL accompanying manuals before riding the bike for the first time.** Your Bosch Drive System comes with additional manuals and documents provided by the manufacturer of the bicycle and other components. Failure to read and understand safety information can result in death or serious injury.

⚠ WARNING

▶ **This manual contains important safety, performance and service information.** Read it before you take the first ride on your new bicycle, and keep it for reference. The manual can also be found online at www.bosch-ebike.com.

▶ **This manual is intended to be read together with the separate user manual provided with your bicycle.** Be sure to read all provided documents including labels on the product before your first ride.

▶ **Take responsibility for your own SAFETY.** If you have any questions or do not understand something, consult with your dealer or the bicycle or component manufacturer.

▶ **Some eBike accessories may present a choking hazard to small children.** Keep these accessories away from children.

⚠ CAUTION

▶ **The Bosch Drive System adds weight to your bicycle which you may not be used to lift.** Avoid injury, use proper lifting techniques.

Using your Manual

In addition to the functions outlined here, changes to software relating to troubleshooting and functional modifications may be introduced at any time.

Graphics

The bicycle shown in this manual may differ slightly from your bicycle, but will be similar enough to help you understand our instructions.

RIGHT-HAND and LEFT-HAND sides are determined by facing in the direction the bicycle will travel when going forward. When you see a broken line (------), the item referred to is hidden from view.

On-Product Warning Labels Charger

A short version of important safety warnings in English, French and Spanish with the following content can be found on the bottom side of the charger (marked with number **(4)** in the representation on the graphics page):

⚠ WARNING

▶ For safe operation, see manual.
Risk of electric shock.
Indoor use only.
Charge only batteries of the Bosch eBike Systems. Other batteries may burst causing personal injury and damage.
Do not replace the plug assembly as risk of fire or electric shock may result.

Operating the Charger

Safety Instructions

IMPORTANT SAFETY INSTRUCTIONS – SAVE THESE INSTRUCTIONS

This manual contains important safety and operating instructions for this battery charger.

- Before using battery charger, read all instructions and cautionary markings on battery charger, battery, and product using battery.

⚠ CAUTION

- **To reduce risk of injury, charge only batteries of the Bosch eBike Systems.** Other types of batteries may burst causing personal injury and damage.



- **Read and understand all safety warnings and instructions.** Failure to follow the below warnings could result in death or serious injury.

Save all safety warnings and instructions for future reference.

The term **charger** is used in these instructions to mean all original Bosch chargers from the system generation **the smart system**.

The term **eBike battery** used in these operating instructions refers to all original Bosch eBike batteries from the system generation **the smart system**.

- **Read and observe the safety warnings and instructions in all operating instructions of the eBike components and your eBike.**
- **It is recommended that you periodically review this information to ensure you are following all recommendations for safe use of this product.**

INSTRUCTIONS PERTAINING TO RISK OF FIRE, ELECTRIC SHOCK, EXPLOSION OR INJURY

⚠ DANGER

- **Only charge Bosch eBike lithium-ion battery packs with approved Bosch eBike chargers. The battery pack voltage must match the battery pack charging voltage of the charger.** Otherwise, there is risk of fire and explosion.
- **Carefully cover the charging socket with the flap after charging the eBike.** This ensures that no dirt or water gets in.



Never expose the charger to rain or wet conditions. In particular, pay attention to dripping water from your eBike, e.g. due to rain or snow. If water enters a charger, there is a risk of electric shock.

⚠ WARNING

- **Use only the original Bosch battery charger supplied with your eBike or one approved for your eBike by the manufacturer and purchased from a trusted source.** Bypassing the battery charger or the use of a non-approved or counterfeit battery charger can lead to death or serious injury.
- **Do not charge or use your eBike in any area with a potentially explosive atmosphere, such as at a fueling area, or in areas where the air contains chemicals or particles (such as grain, dust, or metal powders).** Obey all signs and instructions.
- **Keep the battery charger clean.** Contamination can lead to the risk of an electric shock. Clean only with the use of a damp cloth (mild soap/water).
- **Always check the charger, cable and plug before use. Ensure that the plug and charging socket are dry when you start charging. Stop using the**

charger if you discover any damage. Do not open the charger. Damaged chargers, cables, and plugs increase the risk of electric shock.

- **Avoid excessive load on the device socket and the device connector**. This may result in the charger becoming unusable.
- **Do not operate the charger and the eBike battery on an easily ignited surface (e.g. paper, textiles, etc.) or in a flammable environment.** There is a risk of fire due to the charger heating up during operation.
- **The battery and charger housings can get hot while charging, especially when the ambient temperature is high.** Use caution when touching the battery and charger while charging. Wear protective glove.
- **The eBike battery must not be left unattended while charging, especially overnight.** Once the battery is fully charged, disconnect the eBike battery from the charger and the charger from the mains.
- **Keep the battery charger away from children.** This will ensure that children do not play with the charger.
- **Keep the battery and charger away from children and animals. Unless supervised or instructed on proper/responsible use, children or people who lack the necessary experience or understanding to operate the battery and charger safely should not be left unattended with the battery and charger.** There is a significant risk of personal injury and/or damage.
- **Persons who are not capable of safely operating the charger because of their physical, sensory or mental limitations, or because of their lack of experience or knowledge, may only use this charger under supervision or after having been instructed by a responsible person.** Otherwise, there is a risk of operating errors and injuries.
- **When charging, be aware of the location of the charger cable.** Tripping over the charger cable can result in a fall, leading to personal injury or cause the eBike to fall over.
- **Do not move the eBike or allow it to fall while it's charging.** Make sure the eBike is stable and cannot move easily.
- **Do not plug into a power strip or overload an outlet.** Plug directly into an electrical outlet for charging.
- **Do not use a power converter, for example to convert 220 volts to 110 volts.**
- **The battery charge port terminals and/or the charger plug can get contaminated. Repeatedly connecting contaminated terminals can result in worn and damaged terminals.** Clean thoroughly before connecting the charger.
- **Do not touch the terminals of the battery or charger during an electrical storm in case of a lightning strike.**
- **Handle the charger and power cables with care.** Do not tightly bundle, apply excessive tension (pull force) or carry by the cables.
- **Always follow charger and battery operating, charging and storage temperature.**
- **Ensure the charging area is protected from the elements, dry, well-ventilated, and has a smoke detector.**
- **Ensure the rated voltage capacity from the power source (electrical outlet) matches the charger.**

NOTICE: This device complies with part 15 of the FCC Rules. Operation is subject to the following two conditions:

1. This device must not cause harmful interference, and
2. this device must accept any interference received, including interference that may cause undesired operation.

NOTICE: Changes or modifications made to this equipment not expressly approved by the Robert Bosch GmbH may void the FCC authorization to operate this equipment.

NOTE: This equipment has been tested and found to comply with the limits for a Class B digital device, pursuant to Part 15 of the FCC Rules. These limits are designed to provide reasonable protection against harmful interference in a residential installation. This equipment generates, uses and can radiate radio frequency energy and, if not installed and used in accordance with the instructions, may cause harmful interference to radio communications. However, there is no guarantee that interference will not occur in a particular installation. If this equipment does cause harmful interference to radio or television reception, which can be determined by turning the equipment off and on, the user is encouraged to try to correct the interference by one or more of the following measures:

- Reorient or relocate the receiving antenna.
- Increase the separation between the equipment and receiver.
- Connect the equipment into an outlet on a circuit different from that to which the receiver is connected.
- Consult the dealer or an experienced radio/TV technician for help.

Responsible party:
Bosch eBike Systems Americas
Robert Bosch LLC
27211 Burbank, Foothill Ranch, CA 92610, USA,
www.bosch-ebike.com/us/

Product Description and Specifications

Product Features

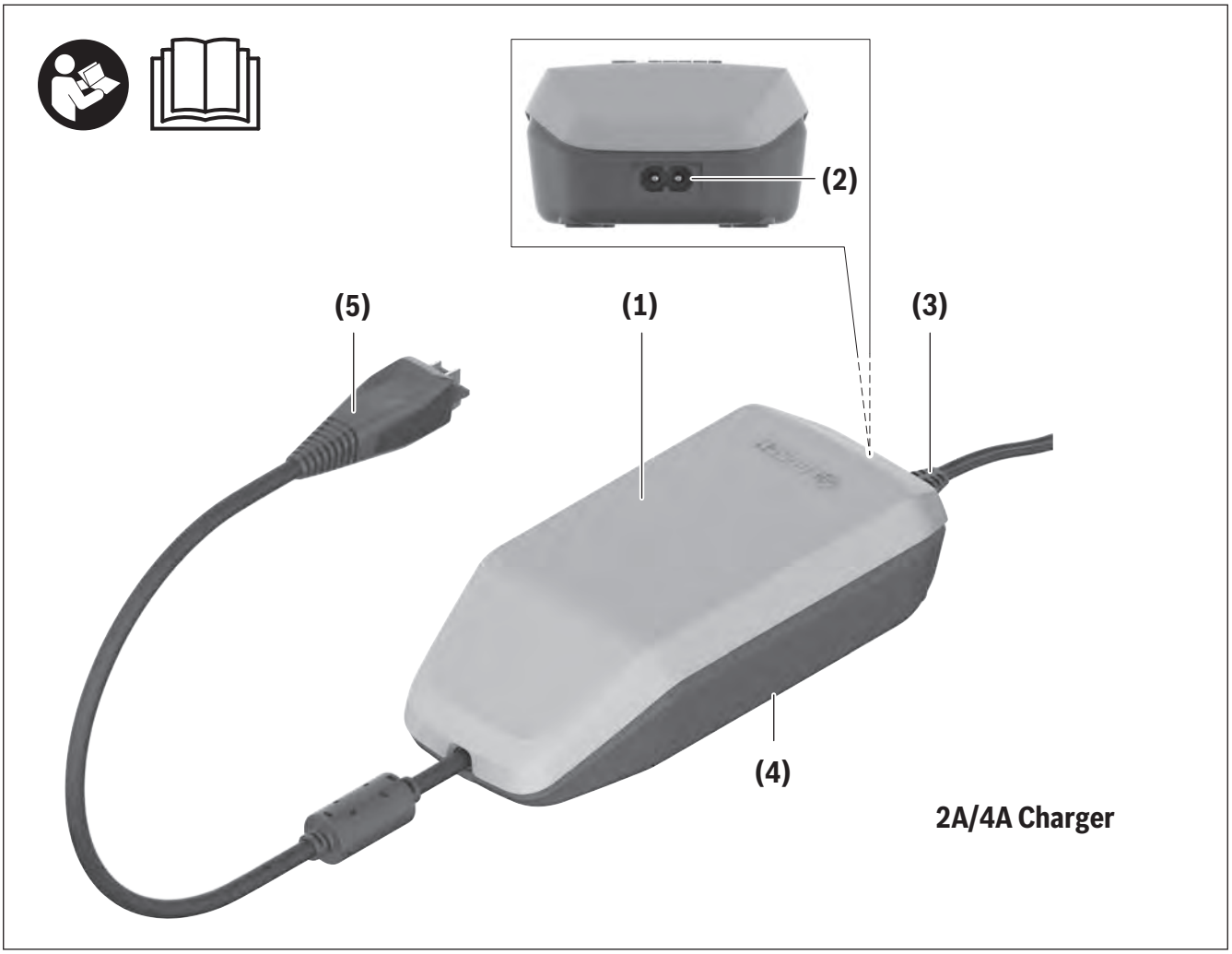

All representations of bike components are schematic and can deviate from your eBike.

(1) Charger
(2) Device socket
(3) Device connector
(4) Charger safety instructions
(5) Charging connector

Intended Use

In addition to the functions outlined here, changes to software relating to troubleshooting and functional modifications may be introduced at any time.

The Bosch eBike chargers are intended exclusively to charge eBike batteries and must not be used for any other purpose.

The Bosch eBike chargers depicted here are compatible with Bosch eBike batteries from the system generation **the smart system**.

Technical data

Charger		2A Charger	4A Charger
Product code		BPC3210	BPC3410
Input voltage	V	100–120	100–120
Frequency	Hz	50–60	50–60
Rated voltage of the rechargeable battery	V	36	36
Charging current (max.)	A	2	4
Charging time from 0 to 100 % at room temperature			
Charging time for PowerPack 400, approx.[A)]	h	6	3.5
Charging time for PowerTube 625, approx.[A)]	h	9.3	5.4
Charging time for PowerTube 800, approx.[A)]	h	12.4	6.9
Operating temperature	°F °C	+32 to +104 0 to +40	+32 to +104 0 to +40
Storage temperature	°F °C	+50 to +104 +10 to +40	+50 to +104 +10 to +40
Weight, approx.	lbs kg	1.2 0.53	1.5 0.7
Protection rating		IP40[B)]	IP40[B)]

A) You can find the charging times for additional eBike batteries at: www.bosch-ebike.com.

B) for indoor use only

Power cable		
Article number		1 270 020 343
Rated voltage – cables	V	300
Rated voltage – connectors/plug-in connectors	V	125
Rated current – connectors/plug-in connectors	A	10
Material – cables		PVC
Safety standard – cables		UL 62
Safety standard – connectors/plug-in connectors		UL 817
Length, approx.	ft	6
	m	1.8

With regard to electromagnetic compatibility (EMC), the charger is classified as a table-top device.

Operation

Start-up

Connecting the charger to the mains

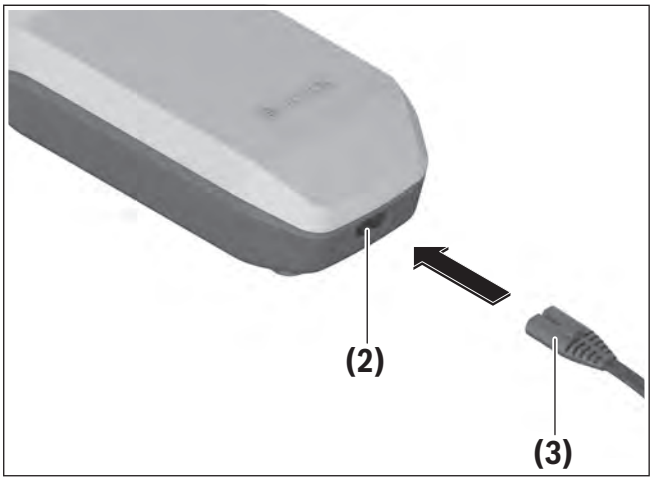

(2) Device socket

(3) Device connector

▸ **Note the household voltage!** The voltage of the power supply must correspond to the specifications given on the battery charger nameplate.

Plug the device connector **(3)** of the power cable into the device socket **(2)** on the charger.

Connect the power cable (country-specific) to the mains.

Use only the supplied input connection: standard AC power cord (**(3)** in the diagram) when connecting to the household electrical supply.

Charging the eBike Battery when Removed

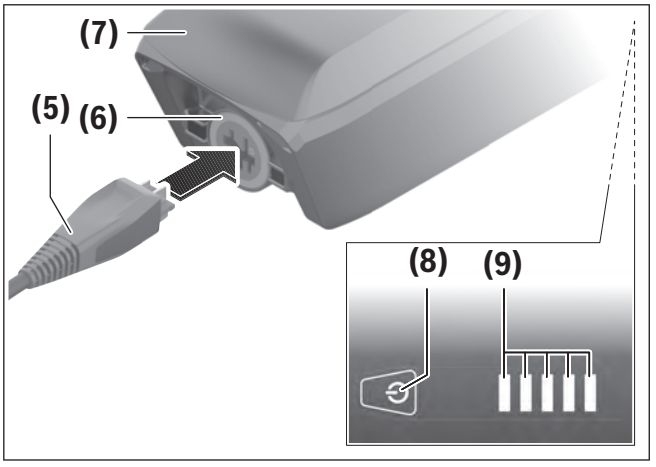

(5) Charging connector

(6) Socket for charging connector

(7) PowerPack

(8) eBike battery on/off button

(9) Operation/battery charge indicator

Switch the eBike battery off and remove it from its holder on the eBike. When doing so, read and observe the operating instructions of the eBike battery.

- ▸ **Ensure the eBike battery is placed on clean surfaces only.** Avoid getting moisture and dirt, e.g. sand or soil, in the charging socket and contacts.

Plug the charging connector **(5)** of the charger into the charging socket **(6)** on the eBike battery.

- ▸ **Ensure the charger's input plug and battery connector plug are both fully inserted into the electrical outlet and the battery's charge port.**

Charging the eBike Battery when Inserted in the eBike

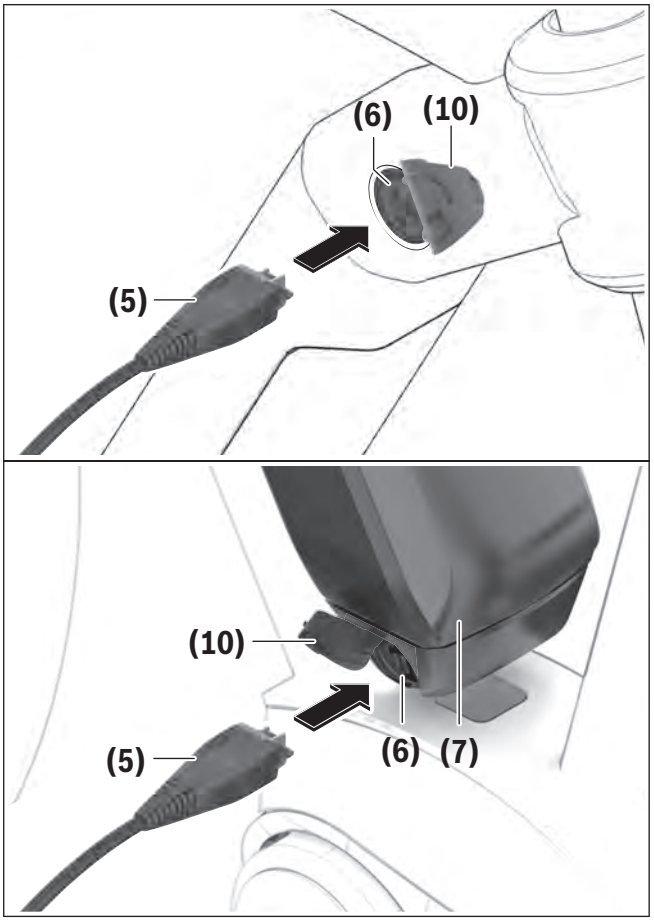

(5) Charging connector
(6) Socket for charging connector
(10) Charging socket cover
(7) PowerPack

Clean the cover of the charging socket **(10)**. Avoid getting moisture and dirt, e.g. sand or soil, in the charging socket and contacts. This particularly applies to built-in eBike batteries.

Lift the cover of the charging socket **(10)** and plug the charging connector **(5)** into the charging socket **(6)**.

- ▸ **There is a risk of fire due to the charger heating up during charging. Ensure the eBike battery on the eBike is completely dry and placed on a fireproof surface before charging.** When doing so, read and observe the operating instructions of the eBike battery.

Using Two eBike Batteries for One eBike (optional)

The bicycle manufacturer can also fit an eBike with two eBike batteries.

If you want to use an eBike that is designed for two eBike batteries with only one eBike battery, cover the contacts of the unused socket using the cover, in order to protect the contacts from corrosion and dirt. If you have any questions or need further information, contact a service center.

Charging Process for Two eBike Batteries

If two eBike batteries are fitted to an eBike, you can charge both eBike batteries via the charging socket. First, the eBike battery that is more strongly discharged is charged to the level of the other battery. Both eBike batteries are then fully charged at the same time.

If you take the eBike batteries out of the holders, you can still charge each one individually (this does not apply to built-in eBike batteries).

When you install the PowerMore battery, the charging socket is occupied by the PowerMore battery cable. Charge the eBike batteries one after the other.

Charging process

The charging process begins as soon as the charger is connected to the eBike battery or charging socket on the eBike and to the mains.

Note: The charging process is only possible when the temperature of the eBike battery is within the permitted charging temperature range.

Note: The charging power can be reduced if the eBike battery and/or charger gets excessively warm.

Note: The drive unit is deactivated during the charging process.

The eBike battery can be charged with and without the display. When charging without the display, the charging process can be observed on the battery charge indicator **(9)** and, where applicable, on the control unit.

The state of charge is displayed by the battery charge indicator **(9)** on the eBike battery, the control unit and, where applicable, the display.

The LEDs on the eBike battery charge indicator **(9)** flash during the charging process. Each continuously lit LED represents approximately 20 % of the charging capacity. The flashing LED indicates the next 20 % currently charging.

Once the eBike battery is fully charged, the LEDs will go out immediately and the display is switched off. The charging process is terminated. The state of charge can be displayed for **5** seconds by pressing the ON/OFF button **(8)** on the eBike battery.

Disconnect the charger from the mains and the eBike battery or the eBike from the charger.

The eBike and eBike battery switch off automatically after being disconnected from the charger.

Note: If you have charged the battery on the eBike, carefully close the charging socket **(6)** with the cover **(10)** after charging, so that no dirt or water can get in.

Maintenance/cleaning

⚠ WARNING

- ▶ **Do not open any of the components. Service should only be carried out at an authorized Bosch eBike dealer.** Failure to follow above warning can cause death or serious injury. Refer to your bicycle manual or component manual for all non-Bosch drive system components.
- ▶ **Do not apply any cleaning agents, paint or chemicals to any components of the Bosch drive system as they may cause premature failure of the component.**

After-sales service and advice on using products

If you have any questions about the eBike and its components, contact a service center.

For contact details of service centers, please visit www.bosch-ebike.com.

More information

More information and videos about the eBike components and their functions can be found in the Bosch eBike Help Center.

Troubleshooting

Note: For built-in eBike batteries, you can see the errors present on the **eBike Flow** app. Please adhere to the specifications stored on the **eBike Flow** app.

Cause	Corrective measures
 eBike battery defective	**Two LEDs flashing on the eBike battery.** Contact a service center.
 eBike battery too warm or too cold	**Three LEDs flashing on the eBike battery.** Disconnect the eBike battery from the charger until the charging temperature range has been reached. Do not reconnect the eBike battery to the charger until it has reached the correct charging temperature.
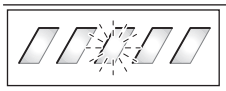 The charger is not charging.	**One LED flashing on the eBike battery.** Contact a service center.
 The charger is not charging.	**No LEDs flashing (one or more LEDs will remain permanently lit depending on the state of charge of the eBike battery).** Contact a service center.
Charging not possible (no indicator on eBike battery)	
Connector not attached properly	Check all connections.
eBike battery contacts dirty	Carefully clean the eBike battery contacts.
Outlet, cable or charger defective	Check the mains voltage, have the charger checked over by a service center.
eBike battery defective	Contact a service center.

Recycling Program



The individual eBike components as well as accessories and packaging should be recycled in an environmentally friendly manner.

Do not dispose of eBikes and their components with household waste.



You may recycle your Bosch battery pack by calling 1.800.822.8837.

Robert Bosch GmbH
72757 Reutlingen
Germany

www.bosch-ebike.com

kontakt@bosch.de

0 275 U07 3CX (2026.02) T / 47

12A Charger

BPC3041

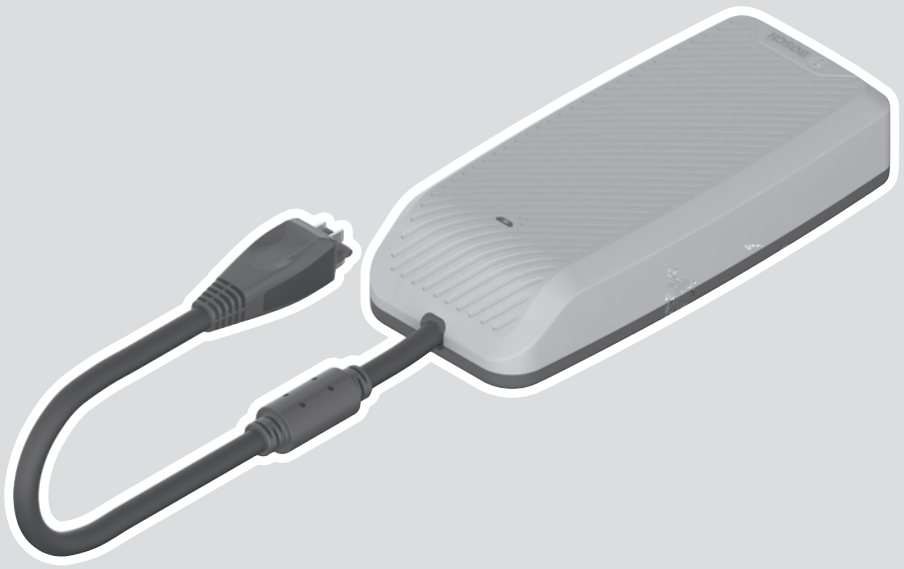

en Original operating instructions

This manual contains important safety, performance and service information. Read and understand it along with the information provided to you by your bicycle manufacturer before using the product, and keep it for reference.

Table of Contents

Introduction 2
- About Warnings 2
- General Warnings 2
- Using your Manual 3

On-Product Warning Labels Charger 4

Operating the Charger 5
- Safety Instructions 5
- Product Description and Specifications 8
- Operation 10
- Maintenance/cleaning 12

Troubleshooting 13

Recycling Program 14

Introduction

Some content is published under license from the **PeopleForBikes Coalition, LTD**.

About Warnings

This manual contains many **DANGER**, **WARNING** and **CAUTION** indicators concerning the consequences of failure to use, assemble, maintain, store, inspect and dispose of a Bosch-equipped eBike in a safe manner.

– The combination of the safety alert symbol and the word **DANGER** indicates a hazardous situation that, if not avoided, will result in death or serious injury.
– The combination of the safety alert symbol and the word **WARNING** indicates a hazardous situation that, if not avoided, could result in death or serious injury.
– The combination of the safety alert symbol and the word **CAUTION** indicates a hazardous situation that, if not avoided, could result in minor or moderate injury.

General Warnings



Read all safety warnings and all instructions. Failure to follow the warnings and instructions may result in death, property damage or serious injury.

Save all safety warnings and instructions for future reference.

The term **eBike battery** used in these operating instructions refers to all original Bosch eBike batteries from the system generation **the smart system**.

▶ **Read ALL accompanying manuals before riding the bike for the first time.** Your Bosch Drive System comes with additional manuals and documents provided by the manufacturer of the bicycle and other components. Failure to read and understand safety information can result in death or serious injury.

⚠ WARNING

▶ **This manual contains important safety, performance and service information.** Read it before you take the first ride on your new bicycle, and keep it for reference. The manual can also be found online at www.bosch-ebike.com.

▶ **This manual is intended to be read together with the separate user manual provided with your bicycle.** Be sure to read all provided documents including labels on the product before your first ride.

▶ **Take responsibility for your own SAFETY.** If you have any questions or do not understand something, consult with your dealer or the bicycle or component manufacturer.

▶ **Some eBike accessories may present a choking hazard to small children.** Keep these accessories away from children.

⚠ CAUTION

▶ **The Bosch Drive System adds weight to your bicycle which you may not be used to lift.** Avoid injury, use proper lifting techniques.

Using your Manual

In addition to the functions outlined here, changes to software relating to troubleshooting and functional modifications may be introduced at any time.

Graphics

The bicycle shown in this manual may differ slightly from your bicycle, but will be similar enough to help you understand our instructions.

RIGHT-HAND and LEFT-HAND sides are determined by facing in the direction the bicycle will travel when going forward. When you see a broken line (------), the item referred to is hidden from view.

On-Product Warning Labels Charger

A short version of important safety warnings in English, French and Spanish with the following content can be found on the bottom side of the charger (marked with number **(4)** in the representation on the graphics page):

⚠ WARNING

- For safe operation, see manual.
  Risk of electric shock.
  Indoor use only.
  Charge only batteries of the Bosch eBike Systems.
  Other batteries may burst causing personal injury and damage.
  Do not replace the plug assembly as risk of fire or electric shock may result.

Operating the Charger

Safety Instructions

IMPORTANT SAFETY INSTRUCTIONS – SAVE THESE INSTRUCTIONS

This manual contains important safety and operating instructions for this battery charger.

- Before using battery charger, read all instructions and cautionary markings on battery charger, battery, and product using battery.

⚠ CAUTION

- **To reduce risk of injury, charge only batteries of the Bosch eBike Systems.** Other types of batteries may burst causing personal injury and damage.



- **Read and understand all safety warnings and instructions.** Failure to follow the below warnings could result in death or serious injury.

Save all safety warnings and instructions for future reference.

The term **charger** is used in these instructions to mean all original Bosch chargers from the system generation **the smart system**.

The term **eBike battery** used in these operating instructions refers to all original Bosch eBike batteries from the system generation **the smart system**.

- **Read and observe the safety warnings and instructions in all operating instructions of the eBike components and your eBike.**
- **It is recommended that you periodically review this information to ensure you are following all recommendations for safe use of this product.**

INSTRUCTIONS PERTAINING TO RISK OF FIRE, ELECTRIC SHOCK, EXPLOSION OR INJURY

⚠ DANGER

- **Only charge Bosch eBike lithium-ion battery packs with approved Bosch eBike chargers. The battery pack voltage must match the battery pack charging voltage of the charger.** Otherwise, there is risk of fire and explosion.
- **Carefully cover the charging socket with the flap after charging the eBike.** This ensures that no dirt or water gets in.



Never expose the charger to rain or wet conditions. In particular, pay attention to dripping water from your eBike, e.g. due to rain or snow. If water enters a charger, there is a risk of electric shock.

⚠ WARNING

- **Use only the original Bosch battery charger supplied with your eBike or one approved for your eBike by the manufacturer and purchased from a trusted source.** Bypassing the battery charger or the use of a non-approved or counterfeit battery charger can lead to death or serious injury.
- **Do not charge or use your eBike in any area with a potentially explosive atmosphere, such as at a fueling area, or in areas where the air contains chemicals or particles (such as grain, dust, or metal powders).** Obey all signs and instructions.
- **Keep the battery charger clean.** Contamination can lead to the risk of an electric shock. Clean only with the use of a damp cloth (mild soap/water).
- **Always check the charger, cable and plug before use. Ensure that the plug and charging socket are dry when you start charging. Stop using the**

charger if you discover any damage. Do not open the charger. Damaged chargers, cables, and plugs increase the risk of electric shock.

- **Avoid excessive load on the device socket and the device connector**. This may result in the charger becoming unusable.
- **Do not operate the charger and the eBike battery on an easily ignited surface (e.g. paper, textiles, etc.) or in a flammable environment.** There is a risk of fire due to the charger heating up during operation.
- **The battery and charger housings can get hot while charging, especially when the ambient temperature is high.** Use caution when touching the battery and charger while charging. Wear protective glove.
- **The eBike battery must not be left unattended while charging, especially overnight.** Once the battery is fully charged, disconnect the eBike battery from the charger and the charger from the mains.
- **Keep the battery charger away from children.** This will ensure that children do not play with the charger.
- **Keep the battery and charger away from children and animals. Unless supervised or instructed on proper/responsible use, children or people who lack the necessary experience or understanding to operate the battery and charger safely should not be left unattended with the battery and charger.** There is a significant risk of personal injury and/or damage.
- **Persons who are not capable of safely operating the charger because of their physical, sensory or mental limitations, or because of their lack of experience or knowledge, may only use this charger under supervision or after having been instructed by a responsible person.** Otherwise, there is a risk of operating errors and injuries.
- **When charging, be aware of the location of the charger cable.** Tripping over the charger cable can result in a fall, leading to personal injury or cause the eBike to fall over.
- **Do not move the eBike or allow it to fall while it's charging.** Make sure the eBike is stable and cannot move easily.
- **Do not plug into a power strip or overload an outlet.** Plug directly into an electrical outlet for charging.
- **Do not use a power converter, for example to convert 220 volts to 110 volts.**
- **The battery charge port terminals and/or the charger plug can get contaminated. Repeatedly connecting contaminated terminals can result in worn and damaged terminals.** Clean thoroughly before connecting the charger.
- **Do not touch the terminals of the battery or charger during an electrical storm in case of a lightning strike.**
- **Handle the charger and power cables with care.** Do not tightly bundle, apply excessive tension (pull force) or carry by the cables.
- **Always follow charger and battery operating, charging and storage temperature.**
- **Ensure the charging area is protected from the elements, dry, well-ventilated, and has a smoke detector.**
- **Ensure the rated voltage capacity from the power source (electrical outlet) matches the charger.**

NOTICE: This device complies with part 15 of the FCC Rules. Operation is subject to the following two conditions:

1. This device must not cause harmful interference, and
2. this device must accept any interference received, including interference that may cause undesired operation.

NOTICE: Changes or modifications made to this equipment not expressly approved by the Robert Bosch GmbH may void the FCC authorization to operate this equipment.

NOTE: This equipment has been tested and found to comply with the limits for a Class B digital device, pursuant to Part 15 of the FCC Rules. These limits are designed to provide reasonable protection against harmful interference in a residential installation. This equipment generates, uses and can radiate radio frequency energy and, if not installed and used in accordance with the instructions, may cause harmful interference to radio communications. However, there is no guarantee that interference will not occur in a particular installation. If this equipment does cause harmful interference to radio or television reception, which can be determined by turning the equipment off and on, the user is encouraged to try to correct the interference by one or more of the following measures:

- Reorient or relocate the receiving antenna.
- Increase the separation between the equipment and receiver.
- Connect the equipment into an outlet on a circuit different from that to which the receiver is connected.
- Consult the dealer or an experienced radio/TV technician for help.

Responsible party:
Bosch eBike Systems Americas
Robert Bosch LLC
27211 Burbank, Foothill Ranch, CA 92610, USA,
www.bosch-ebike.com/us/

Product Description and Specifications

Product Features

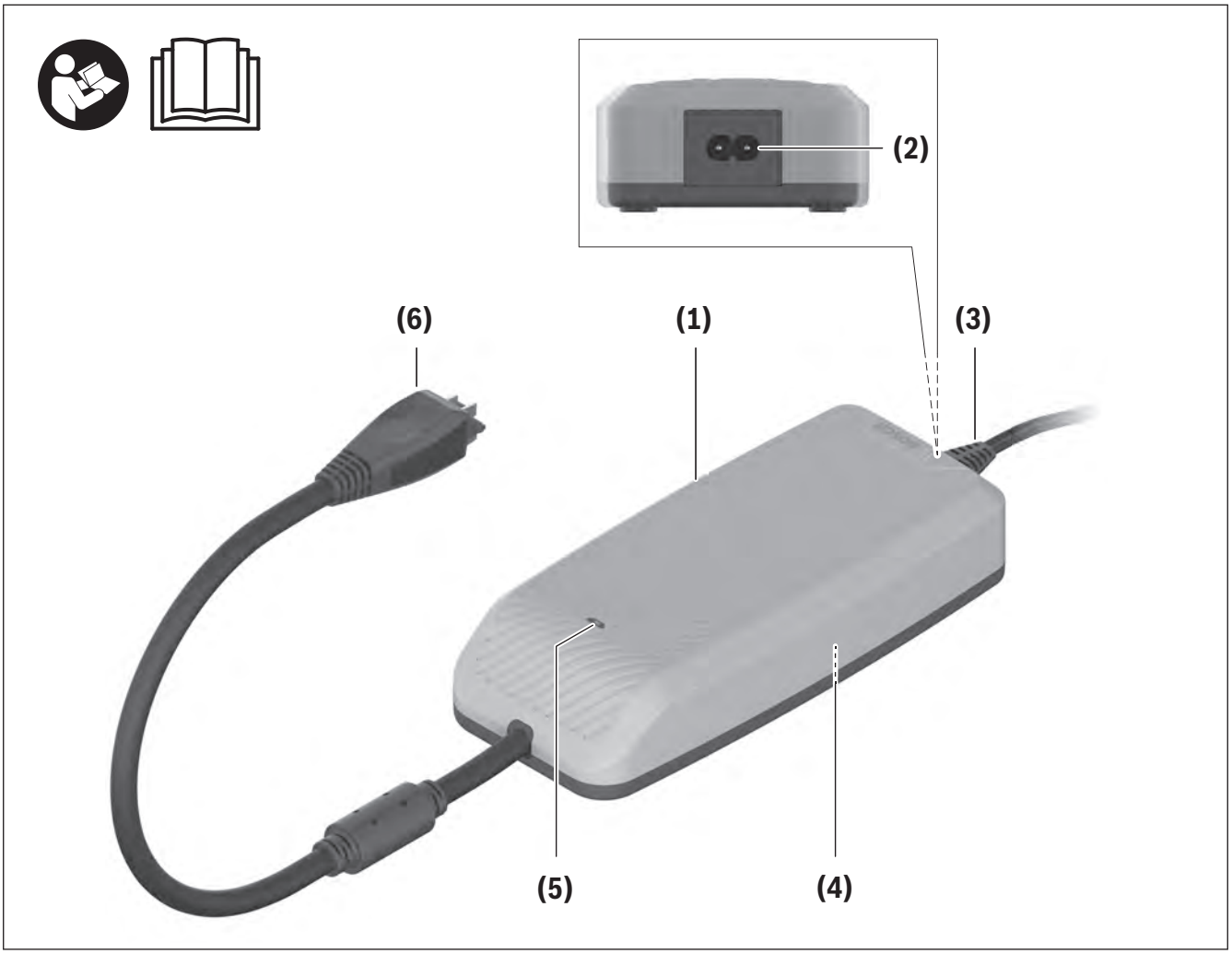

All representations of bike components are schematic and can deviate from your eBike.

(1) Charger
(2) Device socket
(3) Device connector
(4) Charger safety instructions
(5) LED indicator light
(6) Charging connector

Intended Use

The Bosch eBike charger is intended exclusively to charge eBike batteries and must not be used for any other purpose.

The Bosch eBike charger depicted here is compatible with Bosch eBike batteries from the system generation **the smart system**.

In addition to the functions outlined here, changes to software relating to troubleshooting and functional modifications may be introduced at any time.

Technical data

Charger		**12A Charger Wide Range**
Product code		BPC3041
Input voltage	V	100–240
Frequency	Hz	50–60
Rated voltage of the rechargeable battery	V	36
Charging current (max.)	A	12
Operating temperature	°F °C	+32 to +104 0 to +40
Storage temperature	°F °C	+50 to +104 +10 to +40
Weight, approx.	lbs kg	2.2 1.0
Protection rating		IP40[A)]

A) for indoor use only

Power cable		
Article number		1 270 020 343
Rated voltage – cables	V	300
Rated voltage – connectors/plug-in connectors	V	125
Rated current – connectors/plug-in connectors	A	10
Material – cables		PVC
Safety standard – cables		UL 62
Safety standard – connectors/plug-in connectors		UL 817
Length, approx.	ft m	6 1.8

With regard to electromagnetic compatibility (EMC), the charger is classified as a table-top device.

Operation

Start-up

Connecting the charger to the mains

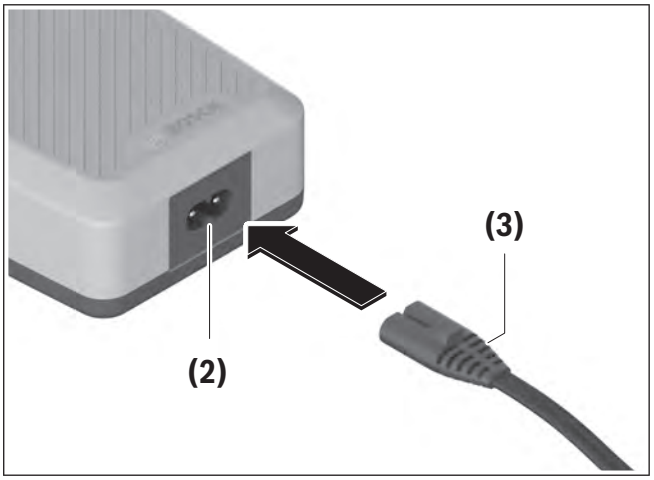

(2) Device socket

(3) Device connector

- ▸ **Note the household voltage!** The voltage of the power supply must correspond to the specifications given on the battery charger nameplate.

Plug the device connector **(3)** of the power cable into the device socket **(2)** on the charger.

Connect the power cable (country-specific) to the mains.

Use only the supplied input connection: standard AC power cord (**(3)** in the diagram) when connecting to the household electrical supply.

Charging the eBike Battery when Removed

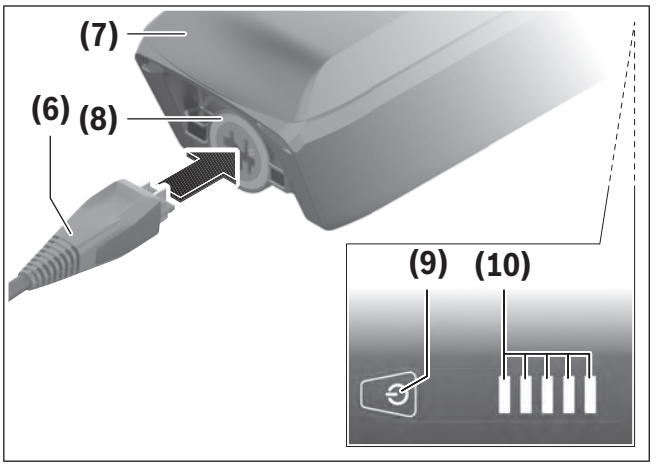

(6) Charging connector

(7) PowerPack

(8) Socket for charging connector

(9) eBike battery on/off button

(10) Operation/battery charge indicator

Switch the eBike battery off and remove it from its holder on the eBike. When doing so, read and observe the operating instructions of the eBike battery.

- ▸ **Ensure the eBike battery is placed on clean surfaces only.** Avoid getting moisture and dirt, e.g. sand or soil, in the charging socket and contacts.

Plug the charging connector **(6)** of the charger into the charging socket **(8)** on the eBike battery.

- ▸ **Ensure the charger's input plug and battery connector plug are both fully inserted into the electrical outlet and the battery's charge port.**

Charging the eBike Battery when Inserted in the eBike

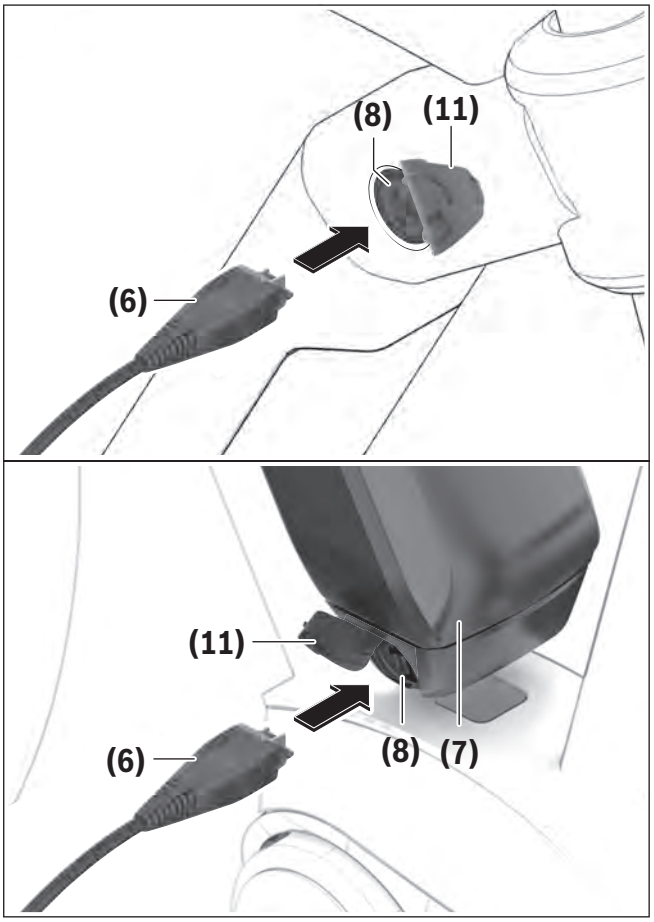

(6) Charging connector
(7) PowerPack
(8) Socket for charging connector
(11) Charging socket cover

Clean the cover of the charging socket **(11)**. Avoid getting moisture and dirt, e.g. sand or soil, in the charging socket and contacts. This particularly applies to built-in eBike batteries.

Lift the cover of the charging socket **(11)** and plug the charging connector **(6)** into the charging socket **(8)**.

- ▸ **There is a risk of fire due to the charger heating up during charging. Ensure the eBike battery on the eBike is completely dry and placed on a fireproof surface before charging.** When doing so, read and observe the operating instructions of the eBike battery.

Charging process

The charging process begins as soon as the charger is connected to the eBike battery or charging socket on the eBike and to the mains.

Note: The charging process is only possible when the temperature of the eBike battery is within the permitted charging temperature range.

Note: The charging power can be reduced if the eBike battery and/or charger gets excessively warm.

Note: The drive unit is deactivated during the charging process.

The eBike battery can be charged with and without the display. When charging without the display, the charging process can be observed on the battery charge indicator **(10)** and, where applicable, on the control unit.

The state of charge is displayed by the battery charge indicator **(10)** on the eBike battery, the control unit and, where applicable, the display.

During the charging process, the LED indicator light **(5)** on the charger flashes and the LEDs on the battery charge indicator **(10)** of the eBike battery light up. Each continuously lit LED on the battery charge indicator represents approximately **(10)** 20 % of the charging capacity. The flashing LED **(10)** indicates the next 20 % currently charging.

Once the eBike battery is fully charged, the LEDs on the battery charge indicator **(10)** go out immediately and the display switches off. The LED indicator light **(5)** of the battery charger is lit the whole time. The charging process is terminated. The state of charge can be displayed for **5** seconds by pressing the on/off button **(9)** on the eBike battery.

Note: The LED indicator light **(5)** on the charger goes out after a little while, even if the eBike battery is still connected and fully charged.

Disconnect the charger from the mains and the eBike battery or the eBike from the charger.

The eBike and eBike battery switch off automatically after being disconnected from the charger.

Note: If you have charged the battery on the eBike, carefully close the charging socket **(8)** with the cover **(11)** after charging, so that no dirt or water can get in.

If you take the eBike batteries out of the holders, you can still charge each one individually (this does not apply to built-in eBike batteries).

When you install the PowerMore battery, the charging socket is occupied by the PowerMore battery cable. Charge the eBike batteries one after the other.

Maintenance/cleaning

⚠ WARNING

- ▶ **Do not open any of the components. Service should only be carried out at an authorized Bosch eBike dealer.** Failure to follow above warning can cause death or serious injury. Refer to your bicycle manual or component manual for all non-Bosch drive system components.
- ▶ **Do not apply any cleaning agents, paint or chemicals to any components of the Bosch drive system as they may cause premature failure of the component.**

After-sales service and advice on using products

If you have any questions about the eBike and its components, contact a service center.

For contact details of service centers, please visit www.bosch-ebike.com.

More information

More information and videos about the eBike components and their functions can be found in the Bosch eBike Help Center.

Troubleshooting

Note: For built-in eBike batteries, you can see the errors present on the **eBike Flow** app. Please adhere to the specifications stored on the **eBike Flow** app.

Cause	Corrective measures
 eBike battery defective	**Two LEDs flashing on the eBike battery.** Contact a service center.
 eBike battery too warm or too cold	**Three LEDs flashing on the eBike battery.** Disconnect the eBike battery from the charger until the charging temperature range has been reached. Do not reconnect the eBike battery to the charger until it has reached the correct charging temperature.
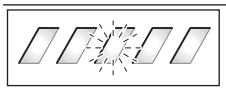 The charger is not charging.	**One LED flashing on the eBike battery.** Contact a service center.
 The charger is not charging.	**No LEDs flashing (one or more LEDs will remain permanently lit depending on the state of charge of the eBike battery).** Contact a service center.
Charging not possible (no indicator on eBike battery)	
Connector not attached properly	Check all connections.
eBike battery contacts dirty	Carefully clean the eBike battery contacts.
Outlet, cable or charger defective	Check the mains voltage, have the charger checked over by a service center.
eBike battery defective	Contact a service center.

Recycling Program



The individual eBike components as well as accessories and packaging should be recycled in an environmentally friendly manner.

Do not dispose of eBikes and their components with household waste.



You may recycle your Bosch battery pack by calling 1.800.822.8837.

Robert Bosch GmbH
72757 Reutlingen
Germany

www.bosch-ebike.com

kontakt@bosch.de

0 275 U07 3FC (2026.03) T / 44

Bosch eBike ABS

Magura: BAS3311 (ABS) | BAS3511 (ABS Pro) |
Tektro: BAS3321 (ABS) | BAS3521 (ABS Pro) |
Shimano: BAS3341 (ABS) | BAS3541 (ABS Pro)



en Original operating instructions

This manual contains important safety, performance and service information. Read and understand it along with the information provided to you by your bicycle manufacturer before using the product, and keep it for reference.

Table of Contents

Introduction 2
About Warnings 2
General Warnings 2
Using your Manual 3
Operating your Bosch ABS 4
Safety Instructions 4
Product Description and Specifications 8
How it works 10
Assembly 10
Operation 11
Maintenance and Service 13
Maintenance and Cleaning 13
After-sales service and advice on using products 13
More information 13
Recycling Program 13

Introduction

About Warnings

This manual contains many **DANGER**, **WARNING**, and **CAUTION** indicators concerning the consequences of failure to use, assemble, maintain, store, inspect and dispose of a Bosch-equipped eBike in a safe manner.

– The combination of the safety alert symbol and the word **DANGER** indicates a hazardous situation that, if not avoided, will result in death or serious injury.
– The combination of the safety alert symbol and the word **WARNING** indicates a hazardous situation that, if not avoided, could result in death or serious injury.
– The combination of the safety alert symbol and the word **CAUTION** indicates a hazardous situation that, if not avoided, could result in minor or moderate injury.

General Warnings



Read all safety warnings and all instructions. Failure to follow the warnings and instructions may result in death or serious injury.

Save all safety warnings and instructions for future reference.

The term **eBike battery** used in these operating instructions refers to all original Bosch eBike batteries from the system generation **the smart system**.

▶ **Read ALL accompanying manuals before riding the bike for the first time.** Your Bosch Drive System comes with additional manuals and documents provided by the manufacturer of the bicycle and other components. Failure to read and understand safety information can result in death or serious injury.

⚠ WARNING

▶ **This manual contains important safety, performance and service information.** Read it before you take the first ride on your new bicycle, and keep it for reference. The manual can also be found online at www.bosch-ebike.com.

▶ **This manual is intended to be read together with the separate user manual provided with your bicycle.** Be sure to read all provided documents including labels on the product before your first ride.

▶ **Take responsibility for your own SAFETY.** If you have any questions or do not understand something, consult with your dealer or the bicycle or component manufacturer.

▶ **Some eBike accessories may present a choking hazard to small children.** Keep these accessories away from children.

⚠ CAUTION

▶ **The Bosch Drive System adds weight to your bicycle which you may not be used to lift.** Avoid injury, use proper lifting techniques.

Using your Manual

In addition to the functions outlined here, changes to software relating to troubleshooting and functional modifications may be introduced at any time.

Graphics

The bicycle shown in this manual may differ slightly from your bicycle, but will be similar enough to help you understand our instructions.

RIGHT-HAND and LEFT-HAND sides are determined by facing in the direction the bicycle will travel when going forward. When you see a broken line (------), the item referred to is hidden from view.

Operating your Bosch ABS

Safety Instructions

General Safety Instructions



Read all the safety and general instructions. Failure to follow the warnings and instructions may result in electric shock, fire and/or serious injury.

Save all safety warnings and instructions for future reference.

The term **eBike battery** used in these operating instructions refers to all original Bosch eBike batteries from the system generation **the smart system**.

The term **ABS** is used in these instructions to mean all original Bosch eBike anti-blocking systems from the system generation **the smart system**.

- ▸ **The ABS function/usefulness will be significantly impaired if the original settings of the ABS components are changed. If you are riding the eBike, impaired performance will significantly increase the risk of injury to the rider and/or damage to the eBike.**
- ▸ **Read and observe all the safety warnings and directions contained in these operating instructions and in the operating instructions of your eBike and the brake manufacturer.**

In these operating instructions, the safety instructions are divided into the following categories:

- **WARNING** – Danger with medium risk level, Failure to follow may result in death or serious injury.
- **CAUTION** – Danger with low risk level, Failure to follow may result in minor or moderate injury.
- **NOTE** – Special instructions to improve handling. These are applicable for operation, checking, adjustment and maintenance.

General safety instructions for the ABS

- ▸ **Tampering with the system components is not permitted under any circumstances. The ABS cannot guarantee absolute safety while riding and the riding style has a significant influence on the effectiveness of the ABS. You should always be anticipating ahead and adapt your riding style according to your abilities and the environmental conditions (e.g. friction depending on the tire and ground conditions, steep inclines, weather conditions, weight distribution, etc.)**
- ▸ **WARNING – tampering with components of the ABS will prevent it from working correctly.** If any components of the braking system or the ABS are tampered with, modified, or replaced with unauthorized components, this may prevent the ABS from working as it should. Correct operation cannot be guaranteed and there is a greater risk of accidents, e.g. from falling. Servicing and repairs must always be carried out by authorized specialists. Defective parts must always be replaced with original parts.
- ▸ **WARNING – only use the brake fluid specified by the relevant brake manufacturer** Only the brake fluid intended for the respective foundation brake and specified by the relevant brake manufacturer may ever be used as brake fluid. If another brake fluid is used, correct operation cannot be guaranteed and there is a greater risk of accidents, e.g. from falling. Servicing and repairs must always be carried out by authorized specialists.
- ▸ **WARNING – only use the original brake pads** Only the original brake pads intended for the respective foundation brake may ever be used as brake pads. If another brake pad is used, correct

operation cannot be guaranteed and there is a greater risk of accidents, e.g. from falling. Servicing and repairs must always be carried out by authorized specialists.

- **WARNING – size of brake disks can only be modified after approval by the bicycle manufacturer**
  The size of the brake disk on the front wheel can only be modified from the eBike's original equipment by a specialist retailer. The specialist retailer must obtain consent from the bicycle manufacturer and an updated software configuration of the ABS. If the size of the brake disk is modified independently, this will prevent the ABS from working correctly. There is a greater risk of accidents, e.g. from falling.
- **WARNING – ensure the minimum tread depth of the tire**
  Only the tires intended for the present bicycle model may ever be used as tires. If another tire is used or the tire tread depth is small, correct operation cannot be guaranteed and there is a greater risk of accidents, e.g. from falling. Servicing and repairs must always be carried out by authorized specialists.
- **WARNING – specific ABS modes for specific applications**
  To cover the applications of ABS, there are four different ABS modes available: Touring, Allroad, Trail and Cargo. The four ABS modes are configured differently and must not be modified. Always adapt your riding style to the present environmental conditions and your personal cycling abilities and also wear appropriate personal protective equipment for the use case.
- **WARNING – ABS inactive**
  If the safety features have been deactivated (the ABS is in off mode), the ABS will not intervene to control the brake, i.e. the bicycle will have the braking behavior of a normal brake system without ABS. If the brake is operated too strongly, it could cause the front wheel to lock or the rear wheel to lift, and also a potential pitchover. Always adapt your riding style to the present environmental conditions and your personal cycling abilities.
- **WARNING – ABS increases braking distance**
  The ABS controls the braking pressure at the front wheel and therefore minimizes the risk of the wheel locking. This significantly improves rider safety by reducing the risk of skidding on low-friction surfaces and pitching over on high-friction surfaces. In some situations, however, system intervention may increase your braking distance. Always adapt your riding style to the present environmental conditions and your personal cycling abilities.
- **WARNING – reckless riding**
  The presence of the ABS does not absolve the rider of the need to exercise due caution. The system is primarily designed to provide an additional safeguard in emergency situations. The ABS is never a substitute for adapting your riding style and riding responsibly.
- **WARNING – braking around corners**
  The ABS is a safety system that reduces the risk of the wheels locking. There is an inherently greater risk of falling when braking around corners. The ABS is never a substitute for adapting your riding style and riding responsibly.
- **WARNING – ABS intervention is limited.**
  In extreme riding situations, the ABS may not be able to control the eBike all the way through to a complete stop. The ABS function can be re-enabled for braking by briefly releasing the front-wheel brake. Always adapt your riding style to the present environmental conditions and your personal cycling abilities.
- **WARNING – there is no ABS function if the eBike battery is drained**
  If the eBike battery is empty, there will be no assistance from the ABS control. The brake system will continue working. It is imperative that you adapt your riding style when riding without an eBike battery and without ABS.
- **WARNING – eBike pitchover**
  The ABS is not always able to prevent the eBike

pitching over in extreme riding situations (e.g. when carrying a heavy bag with a high center of gravity or the eBike having a high center of gravity, e.g. due to the saddle being set high as a result of a small frame, or variations in the road surface or steep descents). Carrying an additional load that changes the vehicle's center of gravity in any way (e.g. a basket or a child seat on the handlebars), which could increase the tendency to tip over, is not recommended. Always adapt your riding style to the present environmental conditions and your personal cycling abilities.

- ▶ **WARNING – air in the hydraulic system**
  If air gets into the brake system, the function and usefulness of the ABS is significantly impaired. The air in the system means that less braking force can be built up, especially following intervention by the ABS, in which the brake lever also moves a little closer to the handlebars. There is an additional risk of crushing to fingers that are not wrapped around the brake lever and remain on the handle while braking.
  Before every journey, you should therefore apply the brake to check whether there is a clearly noticeable pressure point and whether there is sufficient clearance between the brake lever and the handlebar grip. The pressure point should be at approximately 1/3 of the brake lever travel. In case of doubt, set the brake lever to the maximum possible length of travel. If air finds its way into the brake system, please have it bled by a professional. Always adapt your riding style to the present environmental conditions and your personal cycling abilities.
- ▶ **WARNING – check the ABS control unit**
  Before every journey, check that the ABS control unit is fitted securely to the fork. If the ABS control unit comes loose, it may fall into the spokes and cause an accident.
- ▶ **WARNING – limited function during software updates**
  The ABS may be deactivated and there may be no indication from the ABS indicator light during software updates. We do not recommend riding you eBike during software updates.
- ▶ **CAUTION – component damage or risk of crushing**
  Take care not to clamp components such as brake cables, harnesses or body parts between the ABS control unit and the frame. This prevents component damage and injury, even when the handlebar is at full lock.
- ▶ **NOTE – do not allow brake fluid to come into contact with the control unit**
  When servicing the ABS, make sure that the ABS control unit does not come into contact with brake fluid. If the ABS control unit comes into contact with brake fluid, correct operation over the entire service life cannot be guaranteed. In such cases, clean the ABS control unit of the brake fluid as quickly as possible. Servicing and repairs must only be carried out by professionals.

Special safety instructions for the ABS Pro

- ▶ ABS PRO IS SPECIFICALLY DESIGNED FOR HIGH SPORTIVE SEGMENT AND THEREFORE NEEDS HIGH LEVEL OF RIDING SKILLS AS IT IS DEDICATED FOR LATE, SHORT AND HARD BRAKING. ABS PRO IS NOT INTENDED FOR NOVICE AND NORMAL EVERYDAY RIDERS.
- ▶ **WARNING – ABS Pro only for advanced users**
  The ABS Pro is only suitable for advanced users because it requires cycling abilities and practice. Always adapt your riding style to the present environmental conditions and your personal cycling abilities and also wear appropriate personal protective equipment for the use case.
- ▶ **WARNING – specific ABS Pro modes for specific use cases**
  To cover the possible use cases of ABS Pro, the following ABS modes are available: Trail Pro and Race. The ABS modes are configured differently. In the Race ABS Pro mode, the rear wheel lifting con-

trol is deactivated. The ABS Pro modes can be switched off if required (off mode).

- ▶ **WARNING – the ABS Pro control system is limited**
  The ABS Pro is configured to prevent an initial overbraking of the front wheel, but it is not designed to assist braking until the eBike comes to a complete stop. The ABS function can be re-enabled for braking by briefly releasing the front-wheel brake. Always adapt your riding style to the present environmental conditions and your personal cycling abilities.

Privacy notice

When connecting the eBike to the **Bosch DiagnosticTool 3** or when exchanging eBike components, technical information about your eBike (e.g. bicycle manufacturer, model, bike ID, configuration data) as well as regarding the use of the eBike (e.g. total travel time, energy consumption, temperature) is transmitted to Bosch eBike Systems (Robert Bosch GmbH) for processing your request, in service cases and for the purposes of product improvement. You can find further information about data processing at www.bosch-ebike.com/privacy-full.

Product Description and Specifications

Product Features

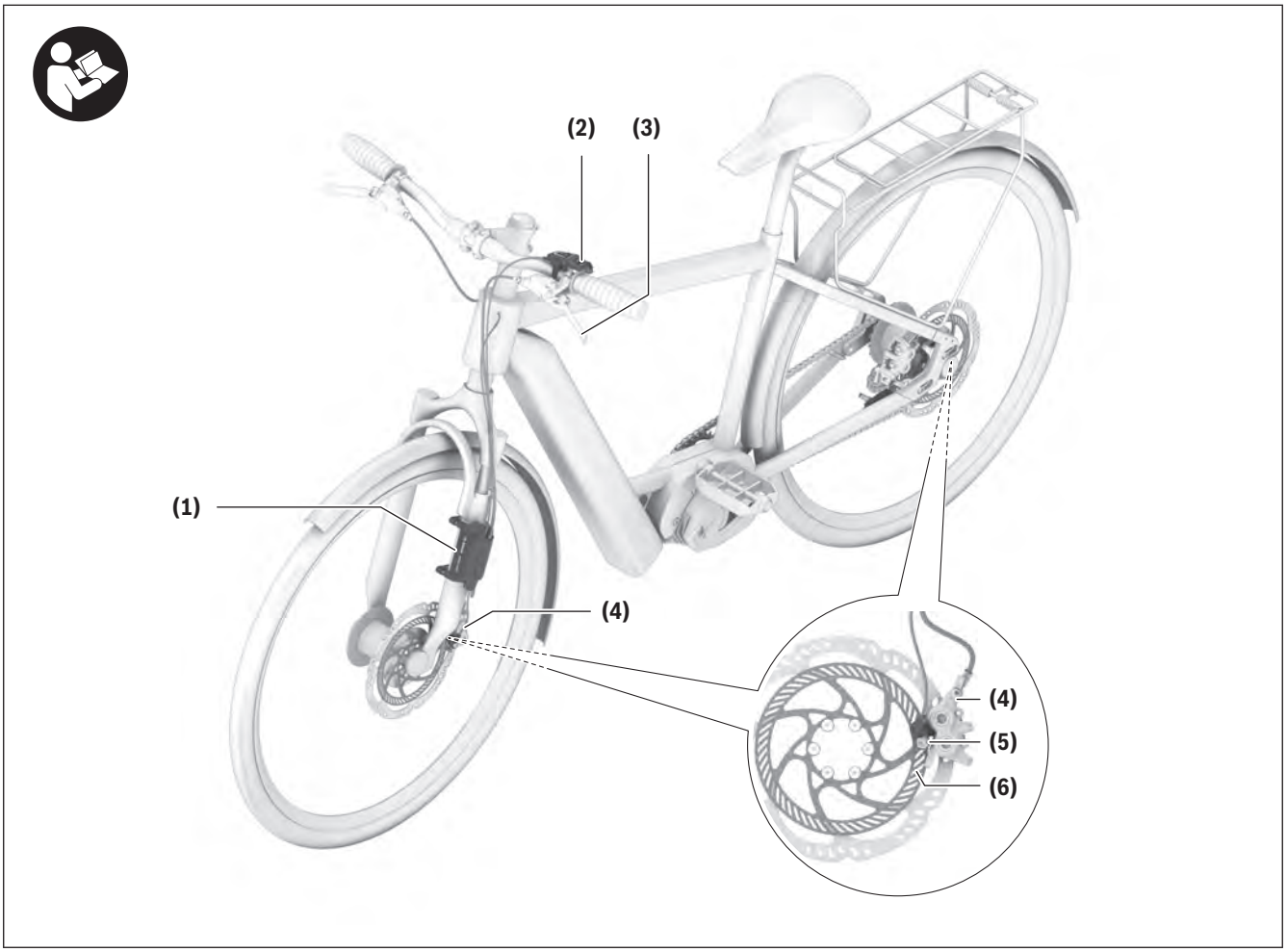

All representations of bike components are schematic and can deviate from your eBike.

(1) ABS control unit
(2) Control unit with ABS indicator light
(3) Front wheel brake lever
(4) Brake caliper
(5) Wheel speed sensor[a)]
(6) Sensor disc

a) The attachment position may vary depending on the bicycle manufacturer.

Intended Use

The **Bosch eBike ABS** (ABS = **A**nti-lock **B**raking **S**ystem) from the system generation **the smart system** helps you to slow down in a more controlled and stable manner while riding and makes cycling safer. During hard braking maneuvers, the braking pressure of the front brake is controlled and therefore stabilizes the riding situation. The ABS must not be modified or removed.

Technical Data

ABS		Magura	Tektro	Shimano
Product code		BAS3311 BAS3511	BAS3321 BAS3521	BAS3341 BAS3541
Operating temperature	°F °C	+23 to +104 −5 to +40	+23 to +104 −5 to +40	+23 to +104 −5 to +40
Storage temperature	°F °C	+50 to +104 +10 to +40	+50 to +104 +10 to +40	+50 to +104 +10 to +40
Protection rating		IP55	IP55	IP55
Weight, approx.	lb g	0.5 215	0.5 215	0.5 215

Note: For a description of the brakes and how they function, please refer to the instructions provided by the brake manufacturer.

How it works

When the front-wheel brake is applied, the ABS function identifies the tendency of the front wheel to block and stop turning. The ABS decreases the braking pressure and thereby stabilizes the eBike. The detection is based either on wheel speed sensors on the front and rear wheels, or on a wheel speed sensor on the front wheel and an inertial sensor system in the drive unit.

Once the eBike has been stabilized, precise increases in braking pressure bring the front wheel back up to the locking limit. This causes the lever to move a small distance towards the handlebars with every braking impulse. If the front wheel is tending to lock again, the pressure is reduced as before. This process is repeated in order to keep the front wheel at the grip limit at all times and therefore make optimum use of the friction coefficient between the tires and the ground.

A certain degree of pulsing or vibrating in the brake lever is considered normal and can be expected during operation of the ABS system.

The ABS function is ended when **one** of the following happens:

- The hydraulic accumulator in the ABS control unit is full.
- The eBike comes to a stop.
- You release the brake.

Due to the way the system operates, the ABS can only step in from a minimum speed of **3 mph (5 km/h)**.

In addition to the primary ABS function, a system has also been integrated that detects when the rear wheel lifts off the ground during heavy braking. This means that, within certain limits, forward pitchover can be counteracted during very hard braking maneuvers.

For ABS Pro in the Race ABS mode, the detection of the rear wheel lifting off the ground is not available during heavy braking, i.e. the rear wheel lifting control is deactivated.

However, the rear wheel lifting off the ground can be used for various sporty cycling maneuvers, if required, e.g. for performing "stoppies" – when using the front brake, lifting the rear wheel into the air and letting it come down in another place around challenging bends on trails.

Assembly

The anti-lock braking system is fully assembled by the manufacturer and must not be modified.

Warning: If you would like to attach other accessories to the handlebars, bear in mind that the handlebars must be able to turn freely at least 60° to either side from the center position. Steering limiters may need to be fitted.

Operation

- **It is not permitted to attach additional holders to the fork, e.g. for panniers, in conjunction with an ABS.**

Note: You can change the ABS function in the eBike settings: Select the ABS mode you require or, in some eBike versions, switch off the ABS function if necessary.

Before each trip

Check to ensure that the ABS indicator light is working correctly on the display and/or control unit whenever you switch the eBike on. You can find more information about this in the section entitled (see "ABS indicator light", page English – 11).

Please check the condition and roadworthiness of the eBike before every journey. It is your responsibility to check that the eBike is in perfect working order and fully roadworthy before every journey. Using the eBike with known faults increases your risk of personal injury.

Always check that the front and rear brakes are working properly before each trip.

Check to ensure that the thickness of the brake pads and the brake discs meets the manufacturer's specifications before setting off.

Check the ABS control unit is fitted securely to the fork.

Before your first trip

Familiarize yourself with how the brakes and ABS work and how they respond when you actuate them, for example by practicing your braking technique away from busy roads.

The braking power can change over time and a running-in period may be necessary when the brakes are new or when the brake pads have been replaced. For more information about the braking system, refer to the brake manufacturer's instruction manual.

During the trip

Adapt your riding style to the present riding situation, the road conditions and your cycling abilities.

Please be aware that the ABS may increase your braking distance.

On slippery surfaces, the tires skid more easily and there is a increased risk of a fall. You should therefore reduce your speed, applying the brakes in good time using a steady pressure.

ABS indicator light

The ABS indicator light **must** come on after starting the eBike and **must** go out again once you start riding at a speed of approx. **3 mph (5 km/h)**.

If the indicator light does not go out once you have started riding or comes on while riding, this means that there is a fault with the ABS or indicates that the ABS is switched off.

If your eBike has a display or a control unit with a display, you will also be shown an error in the ABS as an error code. You can also view a saved error code on the **eBike Flow** app.

The indicator light also comes on if the eBike detects via sensors that you are performing a trick (e.g. riding on the rear wheel). The ABS function will then not be continuously available.

In the Trail ABS mode or in the Trail Pro or Race ABS Pro modes, the ABS function is controlled as follows:

- You are performing a trick while riding.
- The indicator light comes on and the ABS switches off.
- The regular braking function continues to be available.
- Once the trick is finished, the ABS will be reactivated and the indicator light will go out.

If the indicator light continues to light up and the ABS remains deactivated, restart the eBike.

Note: If the indicator light comes on and the ABS is no longer active, the brake system will continue working; simply without the control provided by the ABS.

The functionality of the rear-wheel brake is not affected by whether or not the ABS is working.

- ▸ **WARNING – ABS indicator light on.**
  If the ABS indicator light is on, the ABS function is no longer active.

Note: The ABS indicator light may come on in extreme riding situations where the front wheel and the rear wheel are turning at very different speeds, for example when riding solely on the rear wheel or if a wheel is turning for an unusually long period without making contact with the ground (assembly stands). This will switch the ABS off. To re-enable the ABS, carefully start riding and check whether the ABS indicator light goes out again. If it remains lit, stop the eBike and restart it (switch it off and on again).

- ▸ **CAUTION – faults with the ABS cannot be signaled if the ABS indicator light is defective.**
  When starting the eBike, you yourself must therefore check to ensure that the ABS indicator light is lit; otherwise the eBike will indicate a critical error by flashing red on the control unit. Contact a service center if this happens.

Cycling with an empty eBike battery

If a light is provided on the eBike, the bicycle manufacturer can set an energy reserve. If the state of charge drops below a certain value, the drive assistance will initially be disabled. However, the eBike (including ABS) will remain enabled until the eBike battery's energy reserve has been used up too.

The indicator light will come on again to indicate the forthcoming deactivation of the ABS function.

From this point onwards, the ABS indicator light will remain off despite ABS control being unavailable.

The brake system will continue working, simply without the control provided by the ABS.

If the eBike is not fitted with a battery or the eBike battery is drained, ABS is disabled. You will need to charge the eBike battery before you can re-enable your eBike and the ABS function.

- ▸ **WARNING – ABS will be disabled without a power supply!**

If the power fails, the battery is drained or the eBike battery is not fitted, the ABS will be disabled and the ABS indicator light will not come on.

Maintenance and Service

Maintenance and Cleaning

▸ **Servicing and repairs must only be carried out by professionals. Defective parts must always be replaced with original parts.**

Have your eBike checked by an expert at least once a year (including mechanical parts, up-to-dateness of system software).

Please have your eBike serviced and repaired by a service center.

Do not immerse any components, including the drive unit, in water or clean them with pressurized water.

After-sales service and advice on using products

If you have any questions about the eBike and its components, contact a service center.

For contact details of service centers, please visit www.bosch-ebike.com.

More information

More information and videos about the eBike components and their functions can be found in the Bosch eBike Help Center.

Recycling Program



The individual eBike components as well as accessories and packaging should be recycled in an environmentally friendly manner.

Do not dispose of eBikes and their components with household waste.



You may recycle your Bosch battery pack by calling 1.800.822.8837.

Robert Bosch GmbH
72757 Reutlingen
Germany

www.bosch-ebike.com

kontakt@bosch.de

0 275 U08 3AS (2026.02) / 43

eShift

enviolo AUTOMATiQ | Rohloff E-14 2.0 | 3X3 E9.XP |
TRP E.A.S.I. A12 | Shimano Di2 | GearSensor | Classified



en Original operating instructions

This manual contains important safety, performance and service information. Read and understand it along with the information provided to you by your bicycle manufacturer before using the product, and keep it for reference.

Safety Instructions



Read all the safety and general instructions. Failure to observe the safety and general instructions may result in electric shock, fire and/or serious injury.

Save all safety warnings and instructions for future reference.

The term **drive unit** is used in these instructions to mean all original Bosch drive units from the system generation **the smart system**.

- ▶ **Read and observe the safety warnings and instructions contained in all the operating instructions for the eBike components and in the operating instructions of your eBike.**
- ▶ **Please note that eShift can shift gears while in motion, without you actively pedalling.** This process can be initiated manually via the gear lever or automatically by eShift. On a derailleur system, this means that the drive unit moves the chainring independently. This also moves all parts of the drive and its associated components (e.g. brake disc on the rear wheel). This poses a risk of injury. The availability of the function depends on the specification of your eBike components and how they are configured. For more details, please refer to the bicycle manufacturer's operating instructions.
- ▶ **Remove the eBike battery from the eBike before beginning work (e.g. inspection, repair, assembly, maintenance, work on the chain, etc.) on the eBike. With built-in eBike batteries, please take particular precautions so that the eBike cannot be switched on.** There is a risk of injury if the eBike is accidentally activated.
- ▶ The *Bluetooth*® word mark and logos are registered trademarks owned by Bluetooth SIG, Inc. Any use of such marks by Robert Bosch GmbH, Bosch eBike Systems is under license.

General Information

eShift is the integration of electronic gear shifting systems into the eBike from the system generation **the smart system**.

Note: Further information can be found in the manufacturer's operating instructions for the gearing and the bicycle.

So as to be able to use the full functionality of eShift, a compatible smartphone with the **eBike Flow** app may be required. This depends on the specification of your eBike components and how they are configured.

Using the **eBike Flow** app, a *Bluetooth*® connection can be established between the smartphone and the eBike, as well as between the smartphone and eShift.

Depending on the smartphone's operating system, the **eBike Flow** app can be downloaded free of charge from the Apple App Store and the Google Play Store.

Use your smartphone to scan the code in order to download the **eBike Flow** app.

Instructions on how to use the **eBike Flow** app and more detailed information can be found at www.bosch-ebike.com/help-center.

enviolo

eShift with enviolo AUTOMATiQ

Depending on the cadence you set, eShift adjusts the relevant transmission ratio (gear) to suit your speed, so that you ride at a constant cadence.

eShift without display/with Intuvia 100

The required cadence is set via the **eBike Flow** app or alternatively via the **enviolo AUTOMATiQ** app (both available in the Apple App Store or Google Play Store).

eShift with Kiox 300/Kiox 500/Kiox 400C/ Purion 200/Purion 400/Intuvia 200

To use eShift with enviolo, you can use the control unit to change the required cadence while riding.

Press the select button on your control unit for more than 1 s and then select **<eShift>**.

You can find information about the version of your gear system in the menu **<Settings>** → **<eBike>** → **<Components>**.

For more information, read the operating instructions for your control unit.

eShift with Rohloff E-14 2.0

When using eShift with Rohloff E-14 2.0, you always shift gears via the Rohloff gear lever.

Since eShift detects the gear shift, the gear is shifted at the optimum time with a brief interruption of the drive assistance. This makes it possible to switch under load.

You can switch between manual and automatic switching mode using a separate button or a specific key combination on the Rohloff gear lever.

eShift with Intuvia 100

The engaged gear will be shown briefly on the display whenever the gear is shifted. A permanent gear display is not available.

The required cadence for automatic mode is set using the **eBike Flow** app (available in the Apple App Store or Google Play Store).

eShift with Kiox 300/Kiox 500/Kiox 400C/ Purion 200/Purion 400/Intuvia 200

The gear currently engaged and the switching mode (manual/automatic) activated are displayed on the start screen only.

You can find information about the version of your gear system in the menu **<Settings>** → **<eBike>** → **<Components>**.

For more information, read the operating instructions for your control unit.

eShift mit 3X3 E9.XP

For eShift with 3X3 E9.XP, you always shift gears using the 3X3 gear lever.

Since eShift detects the gear shift, the gear is shifted at the optimum time with a brief interruption of the drive assistance. This makes it possible to switch under load.

You can switch between manual and automatic switching mode using a separate button or a specific key combination on the 3X3 gear lever.

eShift with Intuvia 100

The engaged gear will be shown briefly on the display whenever the gear is shifted. A permanent gear display is not available.

The required cadence for automatic mode is set using the **eBike Flow** app (available in the Apple App Store or Google Play Store).

eShift with Kiox 300/Kiox 500/Kiox 400C/ Purion 200/Purion 400/Intuvia 200

The gear currently engaged and the switching mode (manual/automatic) activated are displayed on the start screen only.

You can find information about the version of your gear system in the menu **<Settings>** → **<eBike>** → **<Components>**.

For more information, read the operating instructions for your control unit.

eShift with TRP E.A.S.I. A12

For eShift with TRP E.A.S.I. A12, always shift gears using the TRP gear lever.

Since eShift detects the gear shift, the gear is shifted at the optimum time with a brief interruption of the drive assistance. This makes it possible to switch under load.

You can switch between manual and automatic switching mode using a separate button on the TRP gear lever.

eShift with Intuvia 100

The engaged gear will be shown briefly on the display whenever the gear is shifted. A permanent gear display is not available.

The required cadence for automatic mode is set using the **eBike Flow** app (available in the Apple App Store or Google Play Store).

eShift with Kiox 300/Kiox 500/Kiox 400C/ Purion 200/Purion 400/Intuvia 200

The gear currently engaged and the switching mode (manual/automatic) activated are displayed on the start screen only.

For eShift with TRP E.A.S.I. A12, you can use the control unit to change the required cadence while riding. Press the select button on your control unit for more than 1 s and then select **<eShift>**.

You can find information about the version of your gear system in the menu **<Settings>** → **<eBike>** → **<Components>**.

For more information, read the operating instructions for your control unit.

SHIMANO

eShift with Shimano Di2

When using eShift with Shimano Di2, you always shift gears via the Shimano gear lever.

Since eShift detects the gear shift, the gear is shifted at the optimum time with a brief interruption of the drive assistance. This makes it possible to switch under load.

You can switch between manual and automatic switching mode using a separate button on the Shimano gear lever.

eShift with Intuvia 100

The engaged gear will be shown briefly on the display whenever the gear is shifted. A permanent gear display is not available.

The required cadence for automatic mode is set using the **eBike Flow** app (available in the Apple App Store or Google Play Store).

eShift with Kiox 300/Kiox 500/Kiox 400C/ Purion 200/Purion 400/Intuvia 200

The gear currently engaged and the switching mode (manual/automatic) activated are displayed on the start screen only.

For eShift with Shimano Di2, you can use the control unit to change the required cadence while riding. Press the select button on your control unit for more than 1 s and then select **<eShift>**.

You can find information about the version of your gear system in the menu **<Settings>** → **<eBike>** → **<Components>**.

For more information, read the operating instructions for your control unit.

gearsensor.com

eShift with GearSensor

When using eShift with GearSensor, you always shift gears via the mechanical gear lever from the gearing manufacturer.

Since eShift detects the gear shift, the gear is shifted with a brief interruption of the drive assistance. This makes it possible to switch under load.

A display of the engaged gear is not available.

eShift with Kiox 300/Kiox 500/Kiox 400C/ Purion 200/Purion 400/Intuvia 200

You can find information about the version of your gear system in the menu **<Settings>** → **<eBike>** → **<Components>**.

For more information, read the operating instructions for your control unit.

CLASSIFIED

eShift with Classified

When using eShift with Classified, you always shift gears via the Classified gear lever.

Since eShift detects the gear shift, the gear is shifted at the optimum time with a brief interruption of the drive assistance. This makes it possible to switch under load.

You can switch between manual and automatic switching mode using a separate button or a specific key combination on the Classified gear lever.

eShift with Intuvia 100

The engaged gear will be shown briefly on the display whenever the gear is shifted. A permanent gear display is not available.

The required cadence for automatic mode is set using the **eBike Flow** app (available in the Apple App Store or Google Play Store).

eShift with Kiox 300/Kiox 500/Kiox 400C/ Purion 200/Purion 400/Intuvia 200

The gear currently engaged and the switching mode (manual/automatic) activated are displayed on the start screen only.

You can find information about the version of your gear system in the menu **<Settings>** → **<eBike>** → **<Components>**.

For more information, read the operating instructions for your control unit.

After-sales service and advice on using products

If you have any questions about the eBike and its components, contact a specialist workshop.

For contact details of specialist workshops, please visit www.bosch-ebike.com.

Further information

Further information and videos on the eBike components and their functions can be found in the Bosch eBike Help Center.

Robert Bosch GmbH
72757 Reutlingen
Germany

www.bosch-ebike.com

kontakt@bosch.de

0 275 007 3ES (2026.02) T / 109

ConnectModule

BCM3101



en Original operating instructions

This manual contains important safety, performance and service information. Read and understand it along with the information provided to you by your bicycle manufacturer before using the product, and keep it for reference.

Table of Contents

Introduction 2
About Warnings 2
General Warnings 2
Using your Manual 3
Operating your Bosch Drive System 4
Safety Instructions 4
Product description and specifications 6
Operation 7
Maintenance and Service 8
Maintenance and Cleaning 8
After-sales service and advice on using products 8
More information 8
Transport 8
Recycling Program 8

Introduction

About Warnings

This manual contains many **DANGER**, **WARNING**, and **CAUTION** indicators concerning the consequences of failure to use, assemble, maintain, store, inspect and dispose of a Bosch-equipped eBike in a safe manner.

– The combination of the safety alert symbol and the word **DANGER** indicates a hazardous situation that, if not avoided, will result in death or serious injury.
– The combination of the safety alert symbol and the word **WARNING** indicates a hazardous situation that, if not avoided, could result in death or serious injury.
– The combination of the safety alert symbol and the word **CAUTION** indicates a hazardous situation that, if not avoided, could result in minor or moderate injury.

General Warnings



Read all safety warnings and all instructions. Failure to follow the warnings and instructions may result in death or serious injury.

Save all safety warnings and instructions for future reference.

The term **eBike battery** used in these operating instructions refers to all original Bosch eBike batteries from the system generation **the smart system**.

▶ **Read ALL accompanying manuals before riding the bike for the first time.** Your Bosch Drive System comes with additional manuals and documents provided by the manufacturer of the bicycle and other components. Failure to read and understand safety information can result in death or serious injury.

⚠ WARNING

▶ **This manual contains important safety, performance and service information.** Read it before you take the first ride on your new bicycle, and keep it for reference. The manual can also be found online at www.bosch-ebike.com.

▶ **This manual is intended to be read together with the separate user manual provided with your bicycle.** Be sure to read all provided documents including labels on the product before your first ride.

▶ **Take responsibility for your own SAFETY.** If you have any questions or do not understand something, consult with your dealer or the bicycle or component manufacturer.

▶ **Some eBike accessories may present a choking hazard to small children.** Keep these accessories away from children.

⚠ CAUTION

▶ **The Bosch Drive System adds weight to your bicycle which you may not be used to lift.** Avoid injury, use proper lifting techniques.

Using your Manual

In addition to the functions outlined here, changes to software relating to troubleshooting and functional modifications may be introduced at any time.

Graphics

The bicycle shown in this manual may differ slightly from your bicycle, but will be similar enough to help you understand our instructions.

RIGHT-HAND and LEFT-HAND sides are determined by facing in the direction the bicycle will travel when going forward. When you see a broken line (------), the item referred to is hidden from view.

Operating your Bosch Drive System

Safety Instructions



Read all the safety and general instructions. Failure to follow the warnings and instructions may result in electric shock, fire and/or serious injury.

Save all safety warnings and instructions for future reference.

- ▶ **Read and observe the safety warnings and instructions in all operating instructions of the eBike components and your eBike.**
- ▶ **Have installation and all repairs to the ConnectModule performed only by a service center.** Specialist knowledge is required here. The ConnectModule or the eBike can only be operated in compliance with the law if the ConnectModule is installed correctly.
- ▶ **The ConnectModule features a wireless interface. There may therefore be operating restrictions in certain locations, e.g. in airplanes or hospitals.** Please also see the additional instructions below (see "Transport", page English – 8).
- ▶ **Caution lithium battery!** Do not store batteries in an environment with extremely high temperatures or extremely low air pressure, this can lead to an explosion or leakage of flammable liquids or gases. Do not dispose the battery in your regular household trash or a public trash receptacle. Batteries that enter the regular waste stream can be damaged, leading to a fire resulting in serious injury, death, property damage and environmental contamination. Recycle the battery at an authorized recycling center or take them to a local household hazardous waste disposal facility.
- ▶ **Caution!** When using the ConnectModule with *Bluetooth*® and/or mobile networks, interference can occur with other devices and equipment, airplanes, and medical devices (e.g. pacemakers, hearing aids). Similarly, the possibility that this may cause damage to humans and animals in the immediate vicinity cannot be completely excluded. Do not use the ConnectModule with *Bluetooth*® in the vicinity of medical devices, gas stations, chemical plants, areas with a potentially explosive atmosphere or on blast sites. Do not use the ConnectModule with *Bluetooth*® in airplanes. Avoid using the device in close proximity to your body over an extended period of time.
- ▶ The *Bluetooth*® wordmark and its logos are the registered trademarks and property of Bluetooth SIG, Inc. Any use of this wordmark/these logos by Robert Bosch GmbH, Bosch eBike Systems is under license.
- ▶ Please note that certain State or local laws may require that class III eBikes must be equipped with a functioning speedometer that displays speed in miles per hour. Riders must be aware of any and all applicable rules and regulations related to the operation or use of class III eBikes in any applicable jurisdictions before operating or otherwise using this product.

Safety Warnings for the Battery inside the ConnectModule

- ▶ **Charge the ConnectModule in temperatures above +32 degrees F (0 degrees C) and below +104 degrees F (40 degrees C). Store ConnectModule in locations where temperatures will not exceed 104 degrees F (40 degrees C).** This is important to prevent serious damage to the battery in the ConnectModule.
- ▶ **Do not expose ConnectModule to fire or excessive temperature.** Exposure to fire or temperature above 212 °F (100 °C) may cause explosion.
- ▶ **Never submerge ConnectModule in fluid of any kind or allow fluid to enter them.** Corrosive or conductive fluid (such as seawater or industrial chemical or bleach containing products, etc.) can

cause short circuit which may result in fire, personal injury and property damage.

- ▶ **Battery leakage may occur under extreme usage or temperature conditions. Avoid contact with skin and eyes.** The battery liquid is caustic and could cause chemical burns to tissues. If liquid comes in contact with skin, wash quickly with soap and water. If the liquid contacts your eyes, immediately flush eyes with water for a minimum of 15 minutes and seek medical attention.
- ▶ **Do not disassemble ConnectModule.** No user serviceable part inside. Incorrect reassembly or damage may result in fire or explosion.

NOTICE: This device complies with part 15 of the FCC Rules. Operation is subject to the following two conditions:

1. This device must not cause harmful interference, and
2. this device must accept any interference received, including interference that may cause undesired operation.

NOTICE: Changes or modifications made to this equipment not expressly approved by the Robert Bosch GmbH may void the FCC authorization to operate this equipment.

NOTE: This equipment has been tested and found to comply with the limits for a Class B digital device, pursuant to Part 15 of the FCC Rules. These limits are designed to provide reasonable protection against harmful interference in a residential installation. This equipment generates, uses and can radiate radio frequency energy and, if not installed and used in accordance with the instructions, may cause harmful interference to radio communications. However, there is no guarantee that interference will not occur in a particular installation. If this equipment does cause harmful interference to radio or television reception, which can be determined by turning the equipment off and on, the user is encouraged to try to correct the interference by one or more of the following measures:

– Reorient or relocate the receiving antenna.
– Increase the separation between the equipment and receiver.
– Connect the equipment into an outlet on a circuit different from that to which the receiver is connected.
– Consult the dealer or an experienced radio/TV technician for help.

Radiofrequency radiation exposure Information:

The device complies with FCC radiation exposure limits set forth for an uncontrolled environment. This equipment has been tested for compliance with SAR limits, the highest reported SAR value is 0.662 W/kg for Body-worn at 0 mm separation, and 0.371 W/kg for extremity at 0 mm separation.

ISED Notice (Canada)

This device contains licence-exempt transmitter(s)/ receiver(s) that comply with Innovation, Science and Economic Development Canada's licence-exempt RSS(s). Operation is subject to the following two conditions:

1. this device may not cause interference, and
2. this device must accept any interference, including interference that may cause undesired operation of the device.

This equipment has been tested for compliance with SAR limits, the highest reported SAR value is 0.662 W/kg for Body-worn at 0 mm separation, and 0.371 W/kg for extremity at 0 mm separation.

Product description and specifications

Intended Use

The ConnectModule is to be used in conjunction with an eBike from the system generation **the smart system**. This is particularly applicable for tracking eBikes in the event of a theft and for remote communication with the eBike.

The ConnectModule can be used with the related features from the **eBike Flow** app. Consequently, to use ConnectModule, you must have a smartphone on which the **eBike Flow** app is downloaded and installed.



Depending on the operating system of the smartphone, the **eBike Flow** app can be downloaded free of charge from the Apple App Store or Google Play Store.

Scan the code with your smartphone to download the **eBike Flow** app.

Technical Data

		ConnectModule
Product code		BCM3101
Internal battery	V mAh	4.35 550
Frequency band LTE Cat-M1	MHz	B2 (1900 MHz) B4 (1700 MHz) B5 (850 MHz) B12 (700 MHz) B13 (700 MHz)
Transmission power	dBm	21
Bluetooth® Low Energy 5.3		
– Frequency	MHz	2402–2480
– Transmission power	mW	6.31
Weight, approx.	lbs g	0.1 40
Operating temperature	°F °C	+23 to +104 –5 to +40
Storage temperature	°F °C	+50 to +104 +10 to +40
Protection rating		IP55

Operation

The ConnectModule requires a working GPS and cellular data connection in order to function.

The ConnectModule has motion sensors, a global positioning system, and cellular communications. This means the ConnectModule can identify movements of the eBike, determine the current position of the eBike, and generate a local alarm.

In this instance, a BLE beacon (radio transmitter for transmitting signals using *Bluetooth*® Low Energy) is automatically activated. This makes it possible to locate the eBike more precisely at close range.

Positions and movement data are displayed in the registered account in the **eBike Flow** app.

The ConnectModule thereby also facilitates services, such as **<eBike Alarm>**, which is provided upon subscribing to **Flow+ subscription**. You can also follow the charging process of your eBike battery via the **<Current charge level>** feature in the **eBike Flow** app. Fees may be payable for this.

- ▶ **The eBike battery must not be left unattended while charging, especially overnight.** Once the battery is fully charged, disconnect the eBike battery from the charger and the charger from the mains.

Further information about the **Flow+ subscription**, as well as details about the individual services and costs, can be found in the **eBike Flow** app or in the Bosch eBike Help Center.

Start-up

As soon as a ConnectModule is installed in an eBike, it can be activated once the **Flow+ subscription** subscription is confirmed.

Services such as **<eBike Alarm>** can be activated and used via the **eBike Flow** app.

The ConnectModule services can be deactivated at any time via the **eBike Flow** app and activated again when **Flow+ subscription** is running.

There is no means of deactivating the ConnectModule itself.

Switching on/off

The ConnectModule does not have to be switched on or off separately.

As long as the ConnectModule is supplied with voltage and the relevant services are activated, it sends data to the registered account for the eBike.

The ConnectModule has an internal battery so that it can provide services independently of the eBike battery. The internal battery's state of charge can be viewed via the **eBike Flow** app. When the internal battery’s state of charge is low, the pauses between signal transmissions become longer: both in terms of the GPS and the BLE beacon. If the state of charge continues to fall, a sufficiently charged eBike battery should be inserted. When doing this, there should be no chargers connected to the eBike.

Switching On Whilst eBike Alarm is Active

If you move your eBike while the **<eBike Alarm>** is active, the alarm will not go off, provided the predefined digital key (smartphone or the **Kiox 300/ Kiox 500** display) is present.

To set off on your eBike, press the on/off button on the operating unit.

For eBikes with assistance up to **28 mph (45 km/h)**, you also need to actively select a mode after turning it on.

Maintenance and Service

Maintenance and Cleaning

The ConnectModule is fitted with an internal, replaceable battery. Please make sure you have the battery replaced by a service center. In the event of damage or failure, contact a service center directly.

If services are not functioning despite being activated, contact the specialist dealer directly, from whom you purchased the ConnectModule.

Note: If you are handing in your eBike to a service center for maintenance, it is recommended that you deactivate **<Lock & Alarm>**.

After-sales service and advice on using products

If you have any questions about the eBike and its components, contact a service center.

For contact details of service centers, please visit www.bosch-ebike.com.

More information

More information and videos about the eBike components and their functions can be found in the Bosch eBike Help Center.

Transport

Whenever you transport your eBike (e.g. in a car trailer, on a train or plane, etc.), we recommend deactivating all the individual services or activating the **<Transport mode>**. This will then deactivate any communication from the ConnectModule. This will prevent alarms being falsely triggered.

Recycling Program

The individual eBike components as well as accessories and packaging should be recycled in an environmentally friendly manner.

Do not dispose of eBikes and their components with household waste.



You may recycle your Bosch battery pack by calling 1.800.822.8837.

Robert Bosch GmbH
72757 Reutlingen
Germany

www.bosch-ebike.com

kontakt@bosch.de

0 275 U09 3CM (2026.02) T / 29

Component Connector

BCC3111

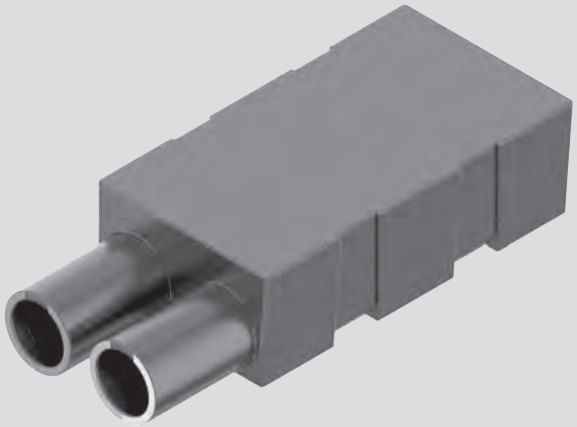

en Original operating instructions

This manual contains important safety, performance and service information. Read and understand it along with the information provided to you by your bicycle manufacturer before using the product, and keep it for reference.

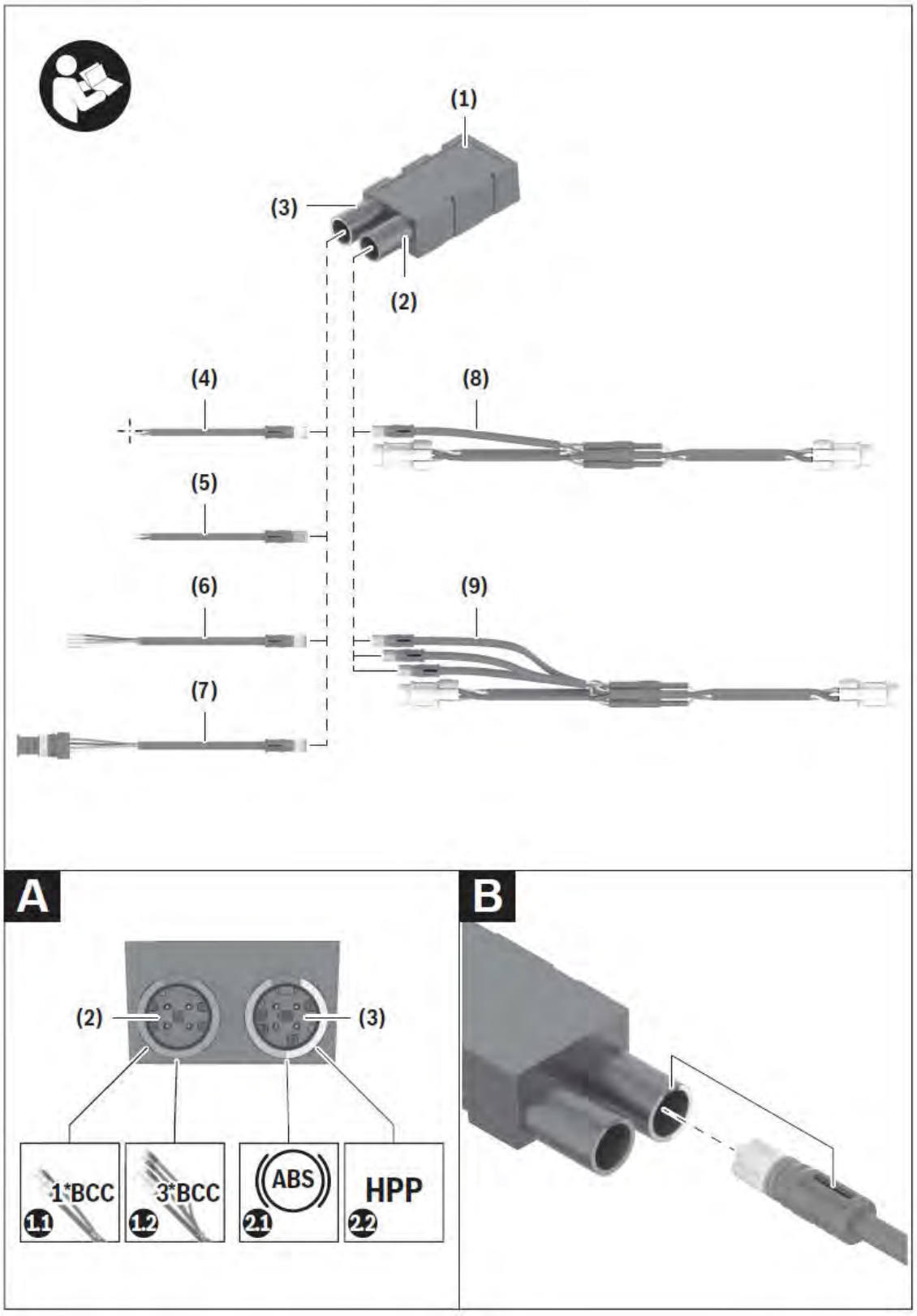
(1)
(3)
(2)
(4)
(8)
(5)
(6)
(9)
(7)
A
(2)
(3)
1*BCC
1.1
3*BCC
1.2
ABS
2.1
HPP
2.2
B

Safety Instructions



Read all the safety and general instructions. Failure to observe the safety and general instructions may result in electric shock, fire and/or serious injury.

Save all safety warnings and instructions for future reference.

- ▶ **Read and observe the safety warnings and instructions contained in all the operating instructions for the eBike components and in the operating instructions of your eBike.**
- ▶ **Always have the Component Connector installed and repaired by an authorised specialist dealer.** Specialist knowledge is required here. Incorrect installation can lead to it no longer being possible to operate the **Component Connector** or the eBike in compliance with the law.
- ▶ **The Component Connector does not have an On/Off switch and is always active when the eBike is switched on. After switching off/parking the eBike, switch off each of the components connected to the Component Connector separately (exception: Bosch eBike ABS (Pro) and eShift components).**
- ▶ **Any connectors and connection sockets on the Component Connector that are not being used must be sealed with a blind plug.**

Product Description and Specifications

Intended Use

The **Component Connector** is a voltage converter (DC/DC) that can only be used with an eBike from the system generation **the smart system**. It provides an additional High Power Port (HPP) for the connection of electrical components, e.g. for the Bosch eBike ABS, eShift components or other electrical components.

Product Features

The numbering of the components shown refers to the illustrations on the graphics pages at the beginning of the manual.

(1) Component Connector
(2) Single core/three core BCC cable connection socket
(3) HPP/ABS connection socket
(4) HPP cable[a)]
(5) LPP cable[a)]
(6) HPP+CAN cable (only for eShift)[a)]
(7) ABS cable[a)]
(8) Single core BCC cable[a)]
(9) Three core BCC cable[a)]

a) Not included in the scope of delivery

Technical Data

Component connection		Component Connector
Product code		BCC3111
Input voltage	V	36
Input current	A	0.66
Output voltage	V	12
Output continuous current	A	1
Output peak current (up to 4 s)	A	3.5
Operating temperature	°C	−5 to +40
Storage temperature	°C	+10 to +40
Dimensions	mm	44 × 11 × 18
Weight, approx.	g	15
Protection rating		IP55

Assembly

Note: The **Component Connector** is only available as a spare part. All the cables and/or components required for connection must already be present on the eBike and are not included with delivery.

Note: Contact an authorised specialist dealer when assembling the **Component Connector**.

Note: If it is replaced, the **Component Connector** must be assembled in the same manner as intended by the eBike manufacturer. This also applies to the installation position, the assembly material and tool to be used as well as to the additional information on the assembly procedure. Where necessary, when doing so take into account the operating instructions for the eBike or consult the eBike manufacturer.

The assembly material is not included in the scope of delivery.

Connect the cable (see figure A)

The **Component Connector (1)** has two connection sockets:

- The red colour-coded connection socket **(2)** in which the similarly red colour-coded BCC connector of the single core/three core BCC cable is inserted.
- The yellow/orange colour-coded ABS/HPP connection socket **(3)**. An orange colour-coded connector of the ABS cable, a similarly orange colour-coded connector of the HPP and CAN cable (only for eShift) or a yellow colour-coded connector of the HPP cable can be inserted in this connection socket.
  Note: The green colour-coded LPP cable is likewise mechanically compatible and compatible in terms of the electrical specification.

Connect the cables according to the following table.

Note: When connecting the cable, pay attention to the colour coding and the orientation of the connector (see figure **B**).

Only the HMI cable is marked white for orientation, all other cables are black.

Pos.	Connection	Colour	Voltage
1.1–1.2	Single core or three core BCC cable	Red	36 V
2.1	ABS	Orange	12 V
2.2	HPP (High Power Port) for additional functions	Yellow	12 V [A]

A) Output current for HPP: 1 A continuous current, peak current of 3.5 A for maximum 4 s possible

Operation

The **Component Connector** does not need to be put into operation separately after assembly.

As the **Component Connector** does not have an On/Off switch, it is always active when the eBike is switched on. Similarly, connected components such as the Bosch eBike ABS or eShift components do not need to be switched on separately. If necessary, other electrical third-party components must be switched on/off separately using an On/Off switch.

Maintenance and Service

Maintenance and Cleaning

The **Component Connector** is maintenance-free. In the event of damage or failure, contact an authorised specialist dealer directly. If a component connected to the **Component Connector** is not working even though it is switched on, consult an authorised specialist dealer directly.

Transport

If you transport your eBike (e.g. in a motor vehicle trailer, on a train, plane, etc.), we recommend switching off each of the third-party components connected separately. This does not apply for the Bosch eBike ABS or eShift components connected.

After-sales service and advice on using products

If you have any questions about the eBike and its components, contact a specialist workshop.

For contact details of specialist workshops, please visit www.bosch-ebike.com.

Further information on the eBike components and their functions can be found in the Bosch eBike Help Center.

Disposal and substances in products

You can find information about substances in products at the following link:
www.bosch-ebike.com/en/material-compliance.

Do not dispose of eBikes and their components with household waste.

An in-store return is possible, provided the store voluntarily offers a return or is legally obligated to do so. Refer to the national regulations in this case.

The individual eBike components as well as accessories and packaging should be recycled in an environmentally friendly manner.

You must independently ensure that no personal data is stored on these eBike components any longer.

Batteries that can be removed from the eBike components without destruction must be removed before disposal itself and sorted for separate battery collection.

In accordance with Regulation (EU) 2023/1542, electrical and electronic equipment that is no longer suitable for use and defective or used rechargeable batteries/non-rechargeable batteries must be collected separately and recycled in an environmentally friendly manner.

Electrical and electronic equipment are collected separately for pre-sorting by type and helps to ensure that raw materials are treated and recovered properly, thereby protecting people and the environment.

Subject to change without notice.

Robert Bosch GmbH
72757 Reutlingen
Germany

www.bosch-ebike.com

kontakt@bosch.de

0 275 007 3CC (2025.02) T / 56

CONTACT

Addres and telephone number:

Trek US
Customer Service
801 W Madison street, Waterloo,
Wisconsin 53594 USA

Telephone number: 920.478.4678
trekbikes.com

Limited warranty
Your bicycle is covered by a Lifetime Limited Warranty. Please visit our web site for details.
For Service and Warranty, please contact your local dealer.

Please refer to the website (Menu/Support) for the latest revision of this manual.
New features, as described in the latest manual, may not be applicable on your electric bike.

TK27 Bosch The Smart System EN-US (28 mph) Rev. 1
July 2026
© 2026 Trek Bicycle Corporation. All rights reserved.

TK27 Bosch The Smart System EN-US (28 mph) Rev. 1
July 2026