ROAD COCKPIT SYSTEM (RCS)

TREK

RCS Race headset

RCS Race headset

RCS Race spacers

Install the RCS Race



RCS Pro headset

RCS Pro headset

RCS Pro spacers

Install the RCS Pro



RCS Universal headset

RCS Universal headset

RCS Universal spacers

Install the RCS Universal



ROAD HEADSET – 2025 and NEWER

SERVICE MANUAL

About this manual

Scope

This manual contains parts diagrams, specifications (such as grease and torque values), instructions, part numbers, and helpful tips. It does not contain instructions for all components. Refer to the original manufacturer for more information.

This headset information applies to 2025 Road bikes and newer. This applies to both carbon and alloy bikes. Your bike frame model may look slightly different than the images in this guide.

Replacement parts

Trek recommends using only Trek OEM (original manufacturer) replacement parts.

Additional info

- Trek Bicycle Owner's Manual
- Trek Bicycle service manual

trekbikes.com/manuals

3D interactive graphics

Click the icon in this manual to view interactive models.

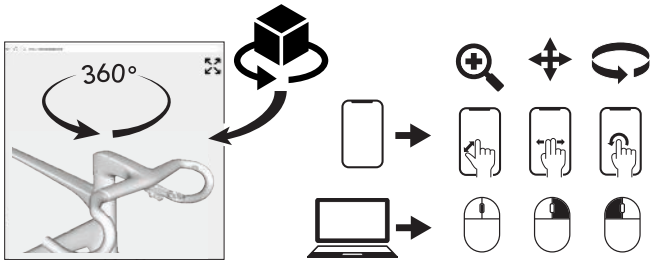

Legend

Nm Torque value



Apply Bontrager grease

Safety

WARNING

Properly tighten hardware

Always tighten hardware to the specified torque. Over-tightening hardware could deform or break the hardware or components. Under-tightening or over-tightening hardware could cause hardware or components to become loose. Either situation could damage the bicycle and result in injury to the rider.

WARNING

Reapply threadlocker

All reused-fasteners with pre-applied threadlocker must be cleaned with isopropyl alcohol and have new threadlocker applied before re-assembly. If threadlocker is not applied, the fasteners may loosen which could damage the bicycle and result in injury to the rider.

Copyright 2026 Trek Bicycle Corporation All Rights Reserved

RCS Race headset

NOTE: The RCS Race headset is only compatible with electronic shifting.

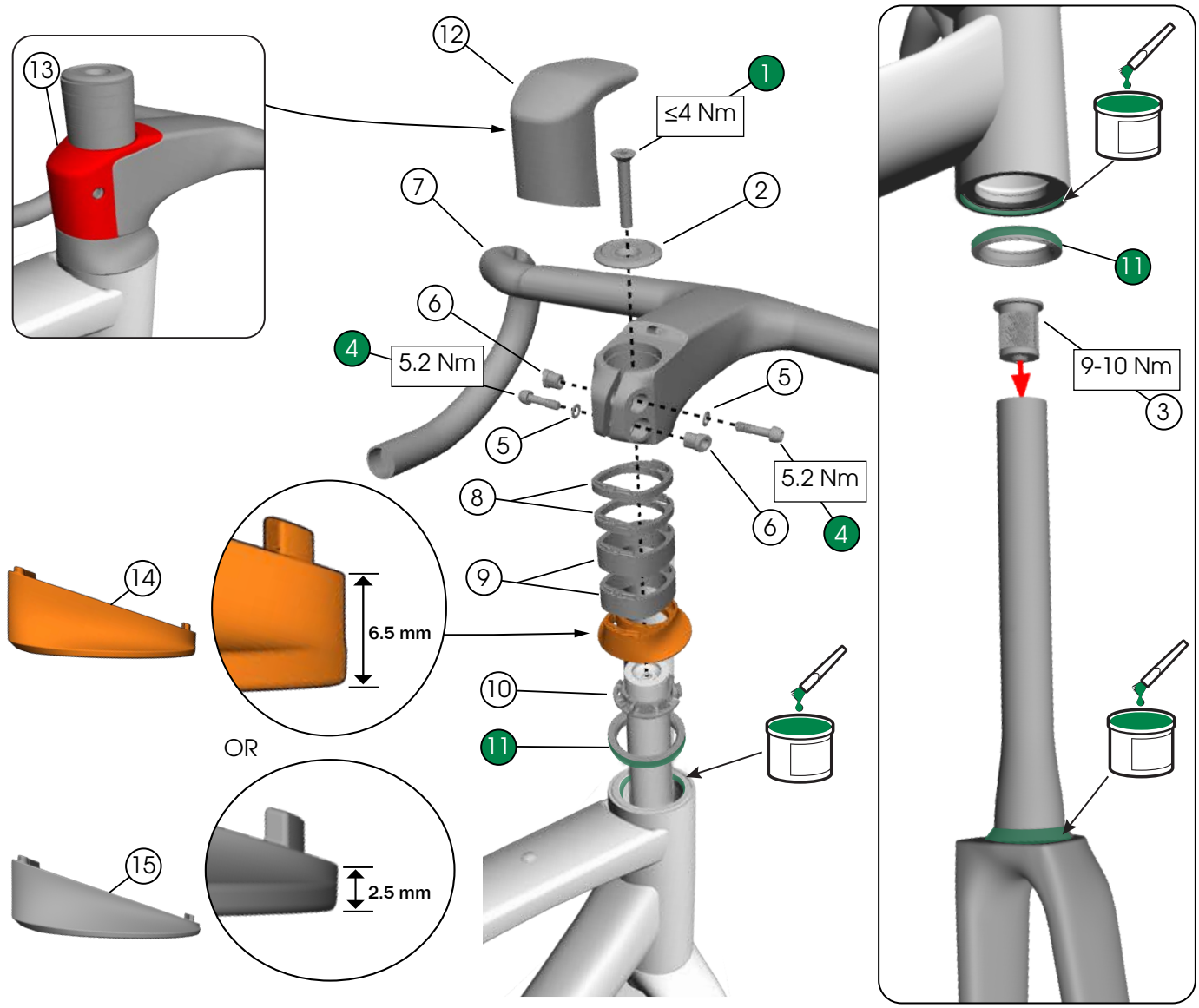

1. Fastener (M6 x 35 mm)
2. Top cap
3. Expander plug



4 — *W547432*

4. Fasteners (M5 x 18.5 mm)
5. Washers (M5)
6. D-nuts (M5)



4 — *5276082*

7. Aero RSL barstem (42 mm x 120 mm, -7°) — **W5316693*
8. Spacers (5 mm) — *W5316079*
9. Spacers (15 mm) — *W5316080*
10. Split ring — *W5315339*
11. Headset bearings — *W5322818*
12. Barstem cover — *W5316077*
13. Exposed barstem cover — *W5316078*
14. Bearing top cover — *W5316081*
15. Bearing top cover, low — *5325626*

**see Trekbikes.com for full product list*

RCS Race spacers

NOTE: If you remove spacers below the stem, you must add the same height of spacers above the stem or cut the steerer tube.

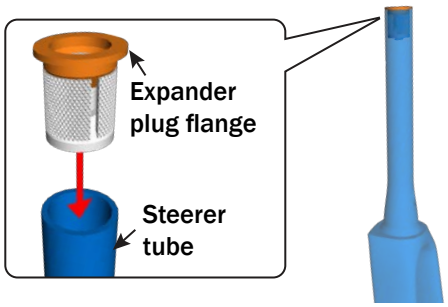

WARNING

Do not exceed 40 mm of headset spacers above or below the stem. If there are more than 40 mm of spacers, the steerer tube could become damaged and break, causing a crash resulting in injury.

Below stem

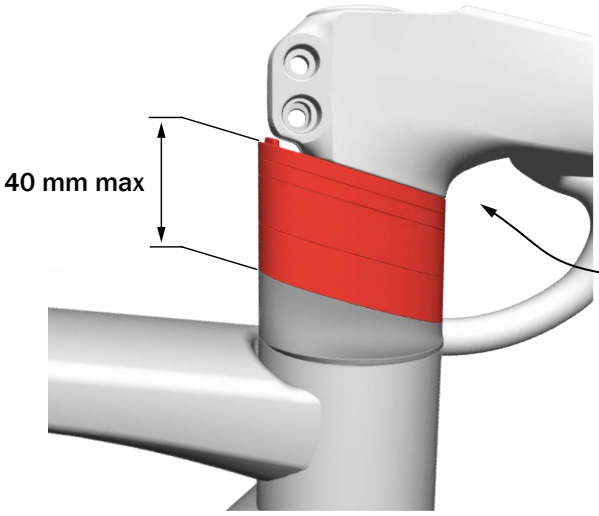

The expander plug flange must sit flush or slightly above (0-2 mm) the ridge inside the barstem.

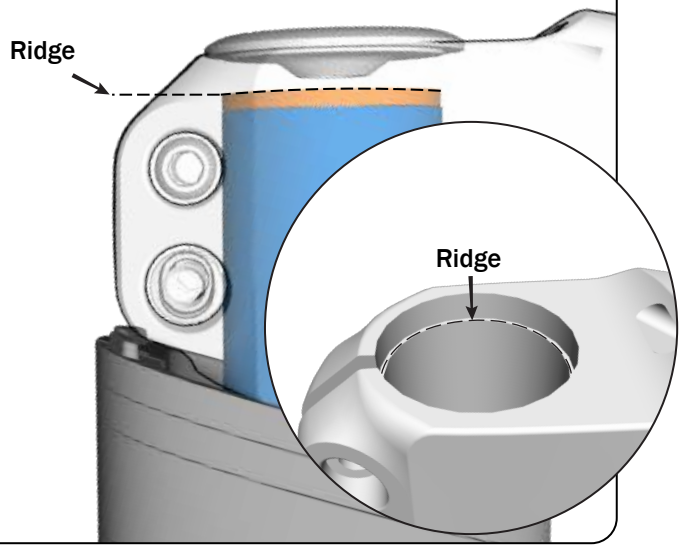

Above stem

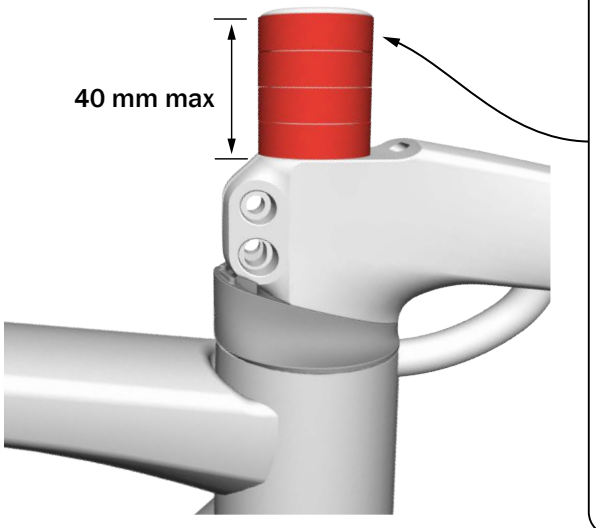

If there are any spacers above the stem, the expander plug flange must extend 3-4 mm into the top spacer.

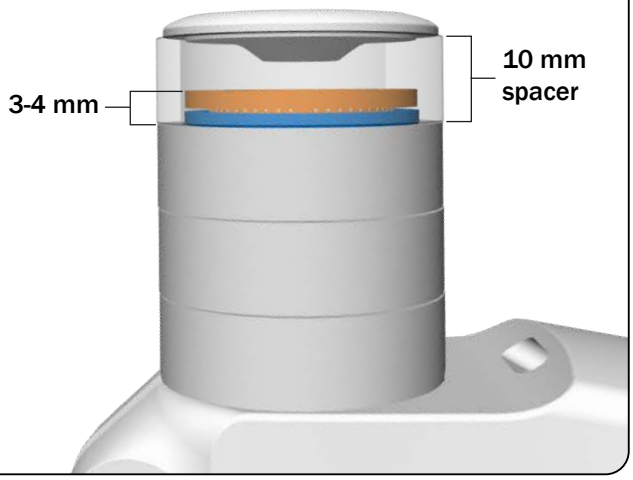

Install the RCS Race

Before you begin:

- Install brake calipers.
- Route all hoses/cables through the frame/fork and connect them to the calipers.
- Make sure the steerer tube is the correct length for the stack/spacer height (see RCS Race spacers).

1.

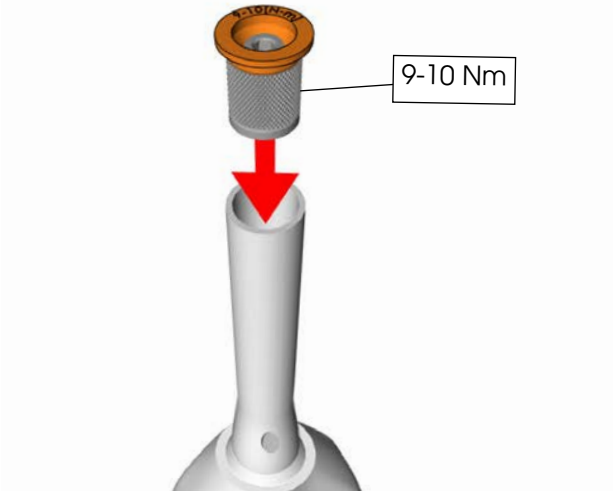

2.

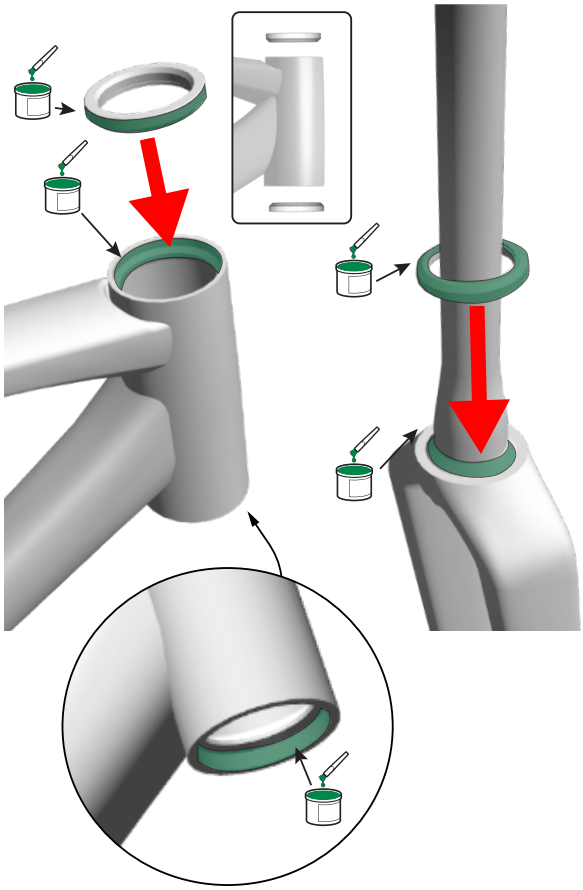

3.

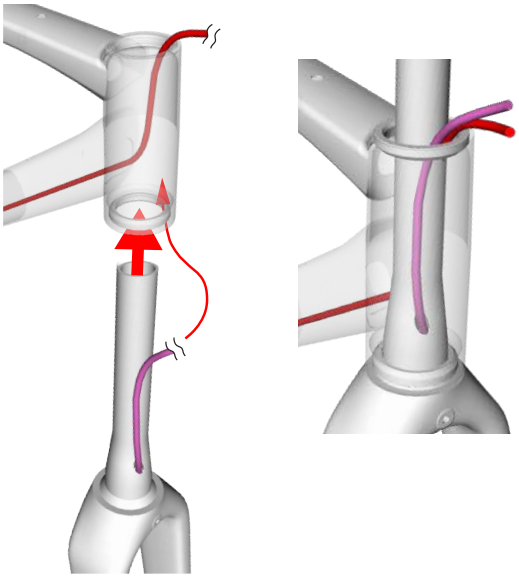

4.

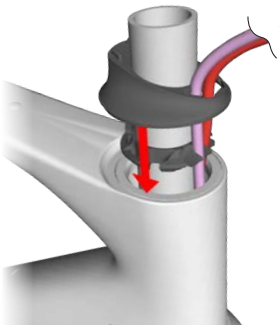

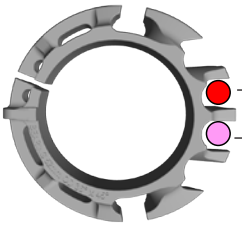

Your bike may use additional cables not shown here. Refer to model-specific cable routing in the bike service manual. Search by bike name and model year: trekbikes.com/manuals

Install the RCS Race (continued)

5. Slide the spacers down the steerer tube. Then feed approximately 40 mm of the rear brake hose and any other headset-routed cables into the frame to allow free handlebar movement. Do not add slack for the front brake hose.

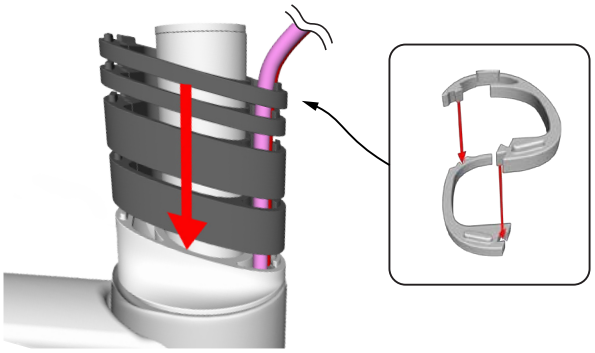

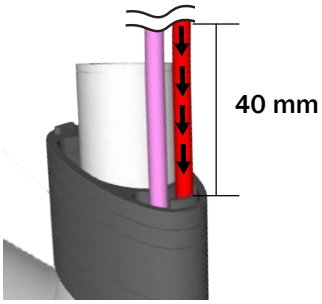

6. Route the brake hoses (and any additional wires, such as e-shift cables) through the barstem using the pre-routed housing guides or an internal cable routing tool (such as Park Tool IR-1.3).

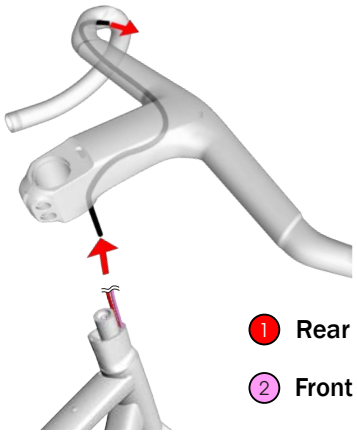

Suggested locations:

1. **Rear brake hose**
2. **Front brake hose**

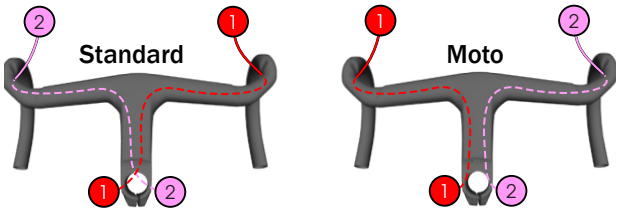

7. Before installing the barstem, attach the exposed cover if you plan to use it.

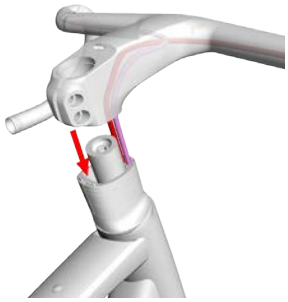



8.

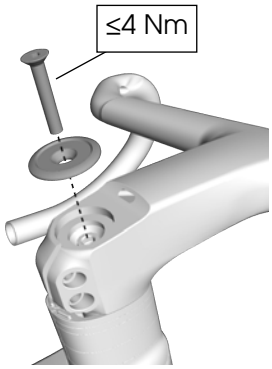



Exposed barstem cover.

9. Tighten both stem fasteners — switching between them — until they are fully torqued.

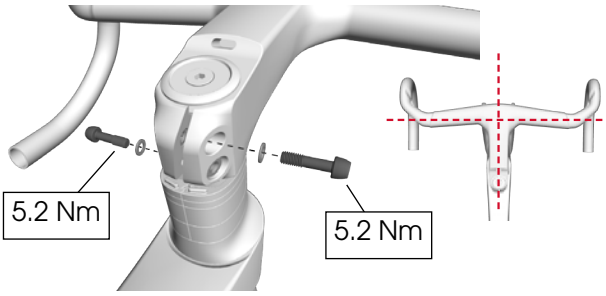

10. Install the barstem cover (unless you used the exposed cover in step 7).

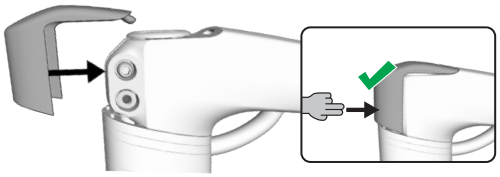



RCS Pro headset

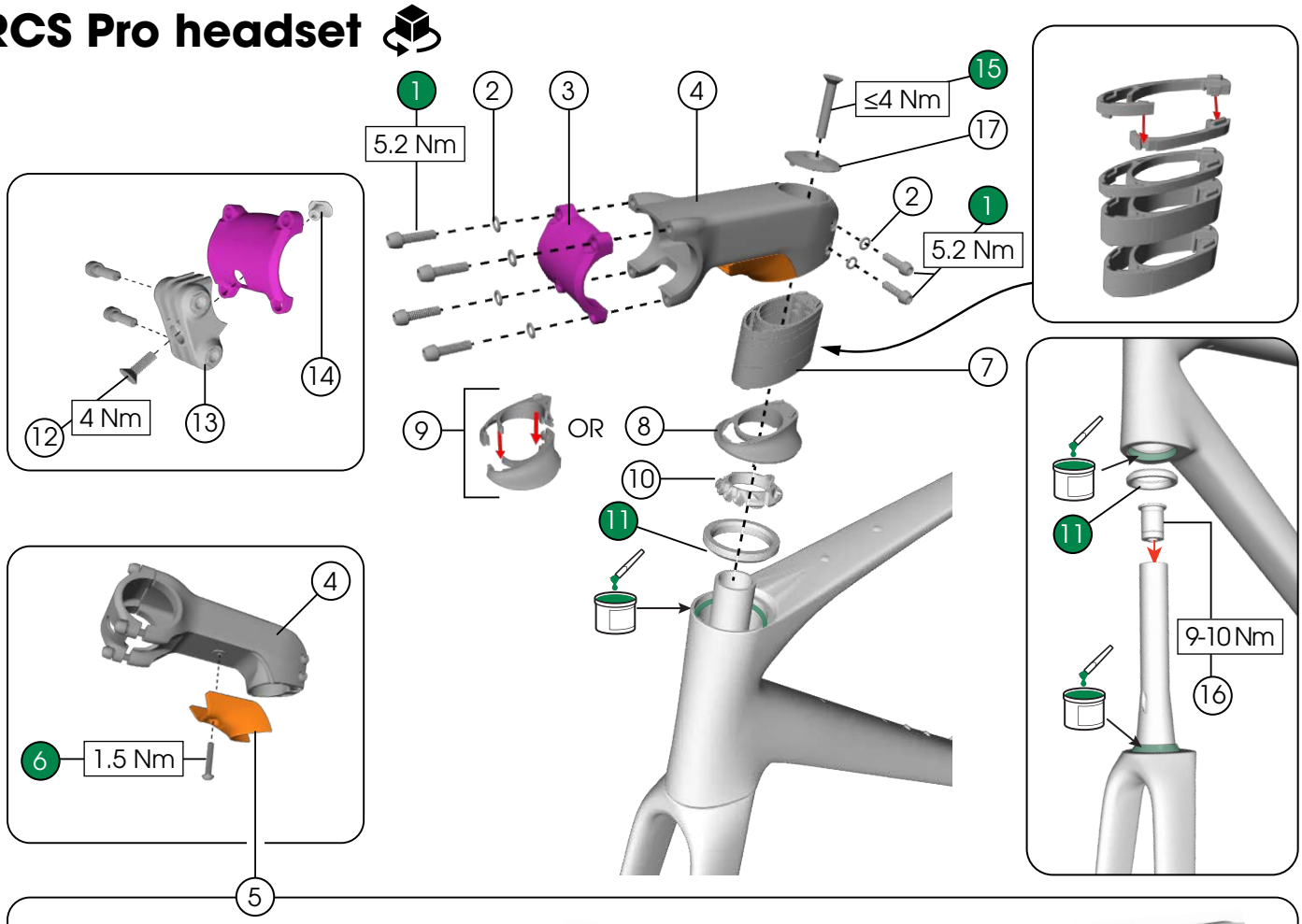

Available routing covers

7° stem



7° x 60/70 mm — *W5274602*

7° x 80/90/100 mm — *W5274603*

-7° stem



-7° x 60/70/80 mm — *W5274599*

-7° x 90/100/110 mm — *W5274600*

-7° x 120/130/140 mm — *W5274601*

1. Fasteners (M5 x 15 mm) — 4 — *5274584
2. Washers (M5) — *5274584
3. Faceplate — *5274584
4. RCS Pro stem (-7° x 100 mm) — *5274584
5. Routing cover — *5274584
6. Fastener (M4 x 25 mm) — 25 — *5274584
7. Spacers
   - 5 mm — *5296906*
   - 15 mm — *5296905*
8. Bearing top cover, 1 piece — *W5317347*
9. Bearing top cover, 2 piece — *5326727*
10. Split ring — *W5315339*
11. Bearings — *W5322818*
12. Fastener (M5 x 12 mm) — 3 — *W5274964*
13. Duo Blendr base — *W5274964*
14. Nut — *W5274964*
15. Fastener (M6 x 35 mm) — 4 — *W547432*
16. Expander plug — *W547432*
17. RCS Pro top cap — *W5274966*

**Search part number on trekbikes.com for full stem product list.*

RCS Pro spacers

NOTE: If you remove spacers below the stem, you must add the same height of spacers above the stem or cut the steerer tube.

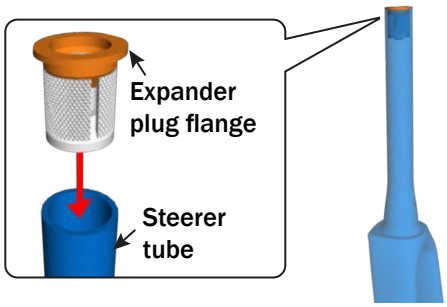

WARNING

Do not exceed 40 mm of headset spacers above or below the stem. If there are more than 40 mm of spacers, the steerer tube could become damaged and break, causing a crash resulting in injury.

Below stem

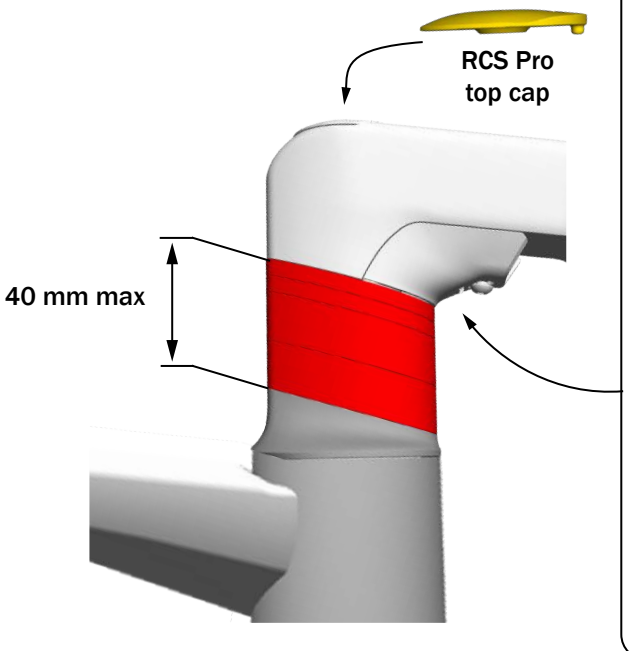

The expander plug flange must sit flush or slightly above (0-2 mm) the ridge inside the stem.

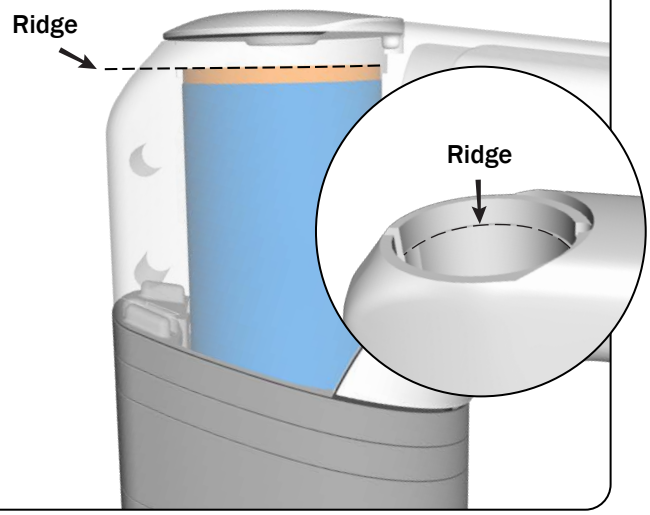

Above stem

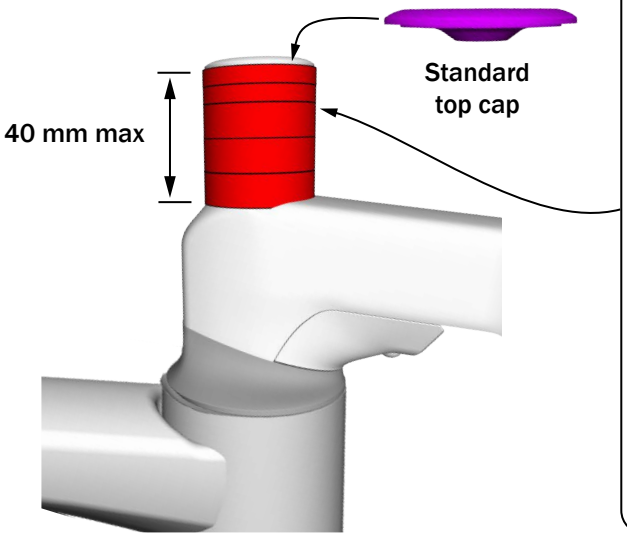

If there are any spacers above the stem, the expander plug flange must extend 3-4 mm into the top spacer.

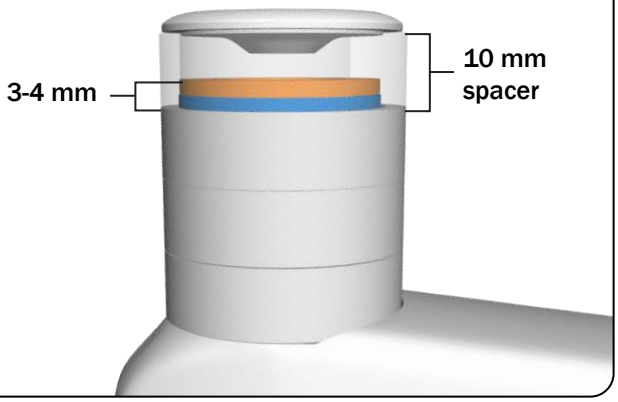

Install the RCS Pro

Before you begin:

- Install derailleur(s) and brake calipers.
- Route all cables/hoses through the frame/fork and connect them to the derailleurs/calipers.
- Make sure the steerer tube is the correct length for the stack/spacer height (see RCS Pro spacers).

1.

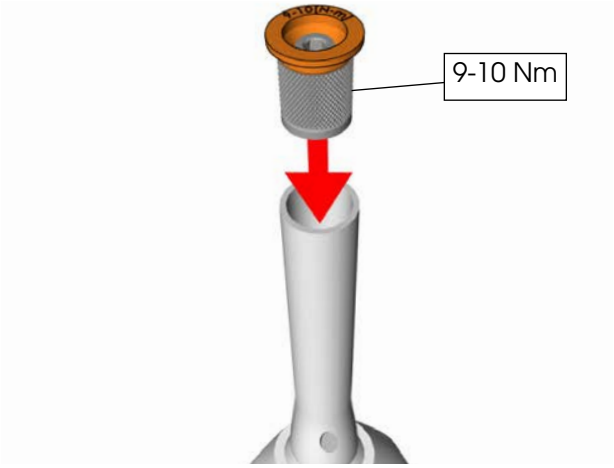

2.

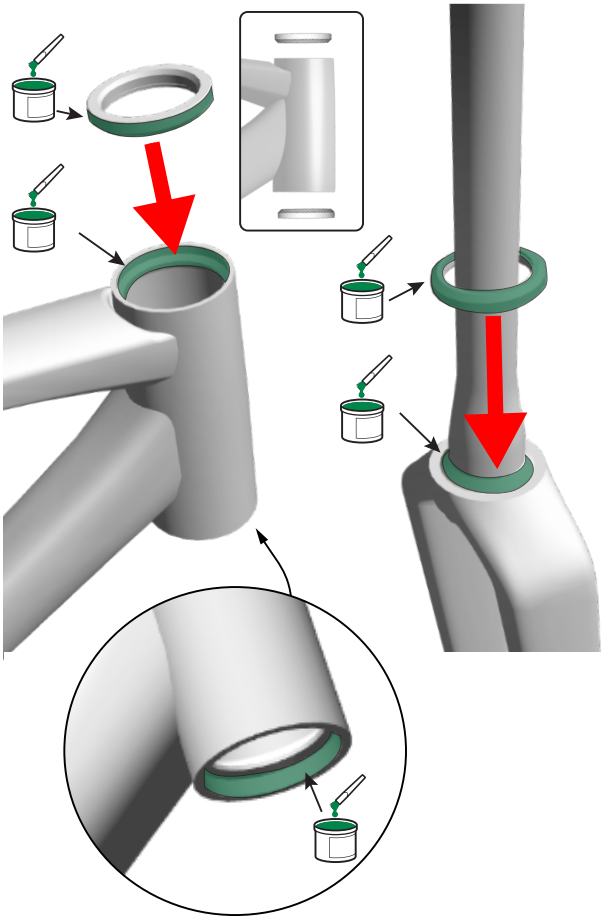

3.

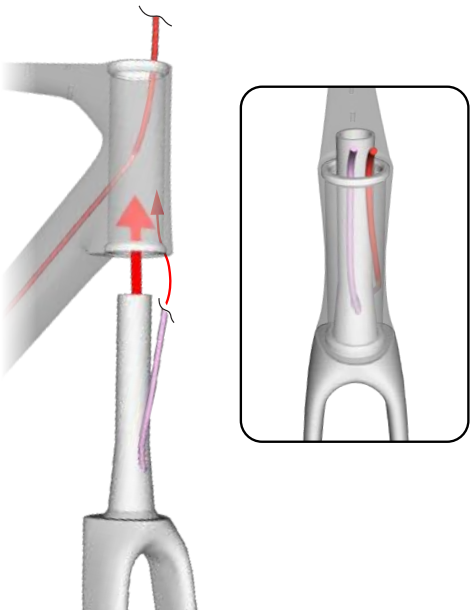

4.

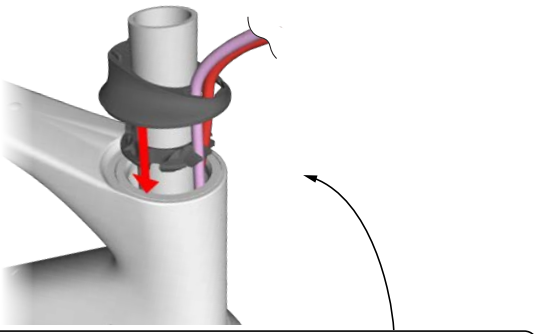

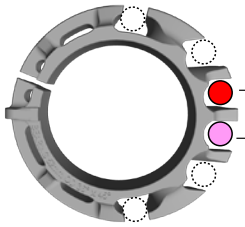

Your bike may use additional cables not shown here. Refer to model-specific cable routing in the bike service manual. Search by bike name and model year: trekbikes.com/manuals

Install the RCS Pro (continued)

5. Slide the spacers down the steerer tube. Then feed approximately 40 mm of the rear brake hose and any other headset-routed cables into the frame to allow free handlebar movement. Do not add slack for the front brake hose.

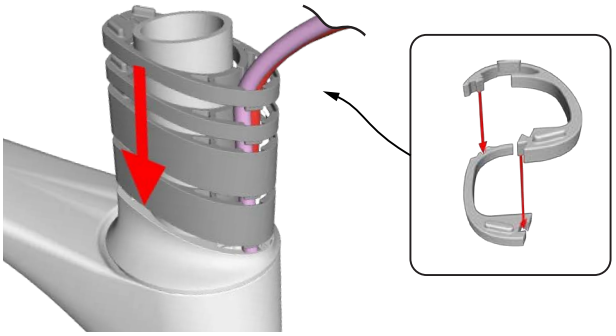

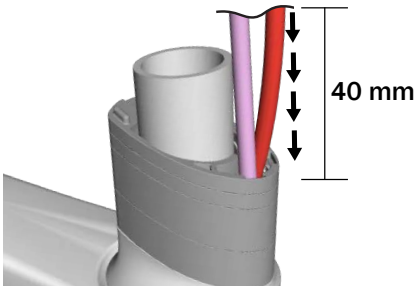

6.

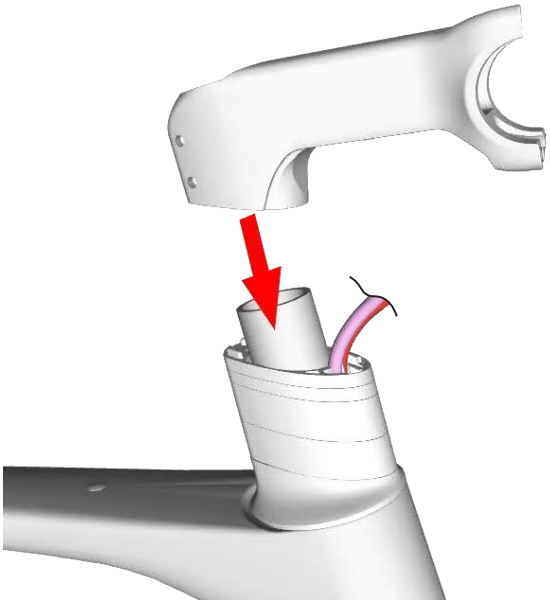

7.

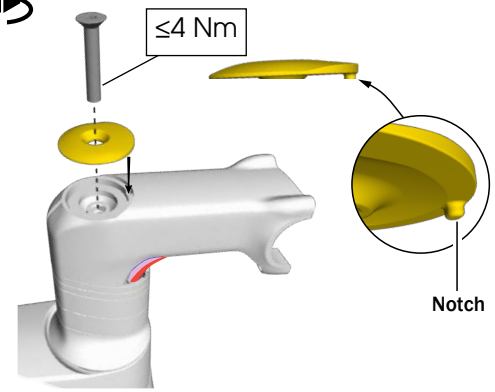

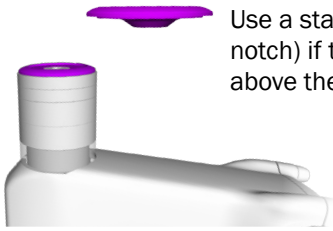

Use a standard top cap (no notch) if there are spacers above the stem.

8. Loosely tighten the faceplate fasteners to secure the handlebar.

OPTIONAL: Attach the Blendr base to the faceplate before attaching the handlebar.

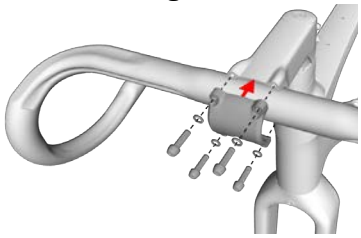

9. Fully tighten the top fasteners first — switching between them — until they are fully torqued. Repeat for the bottom two fasteners.

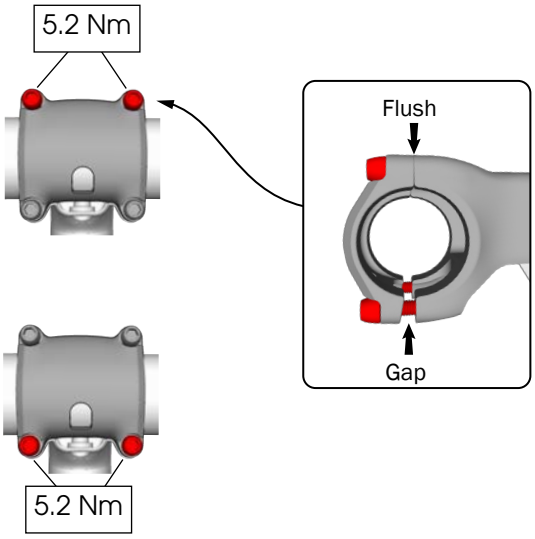

Install the RCS Pro (continued)

10. Tighten both stem fasteners — switching between them — until they are fully torqued.

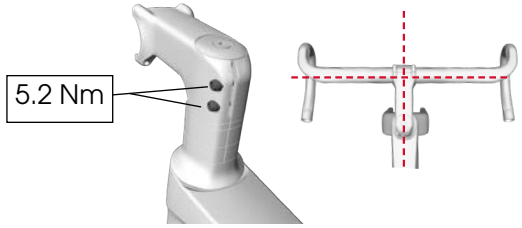

11. Insert the routing cover.

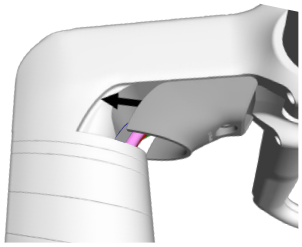

Suggested locations:

1. **Rear brake hose**
2. **Front brake hose**

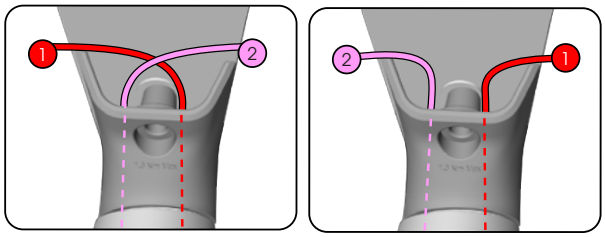

Standard **Moto**

12.

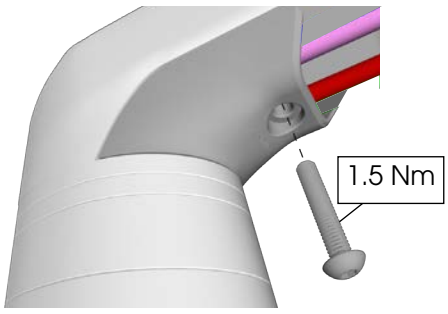

RCS Universal headset

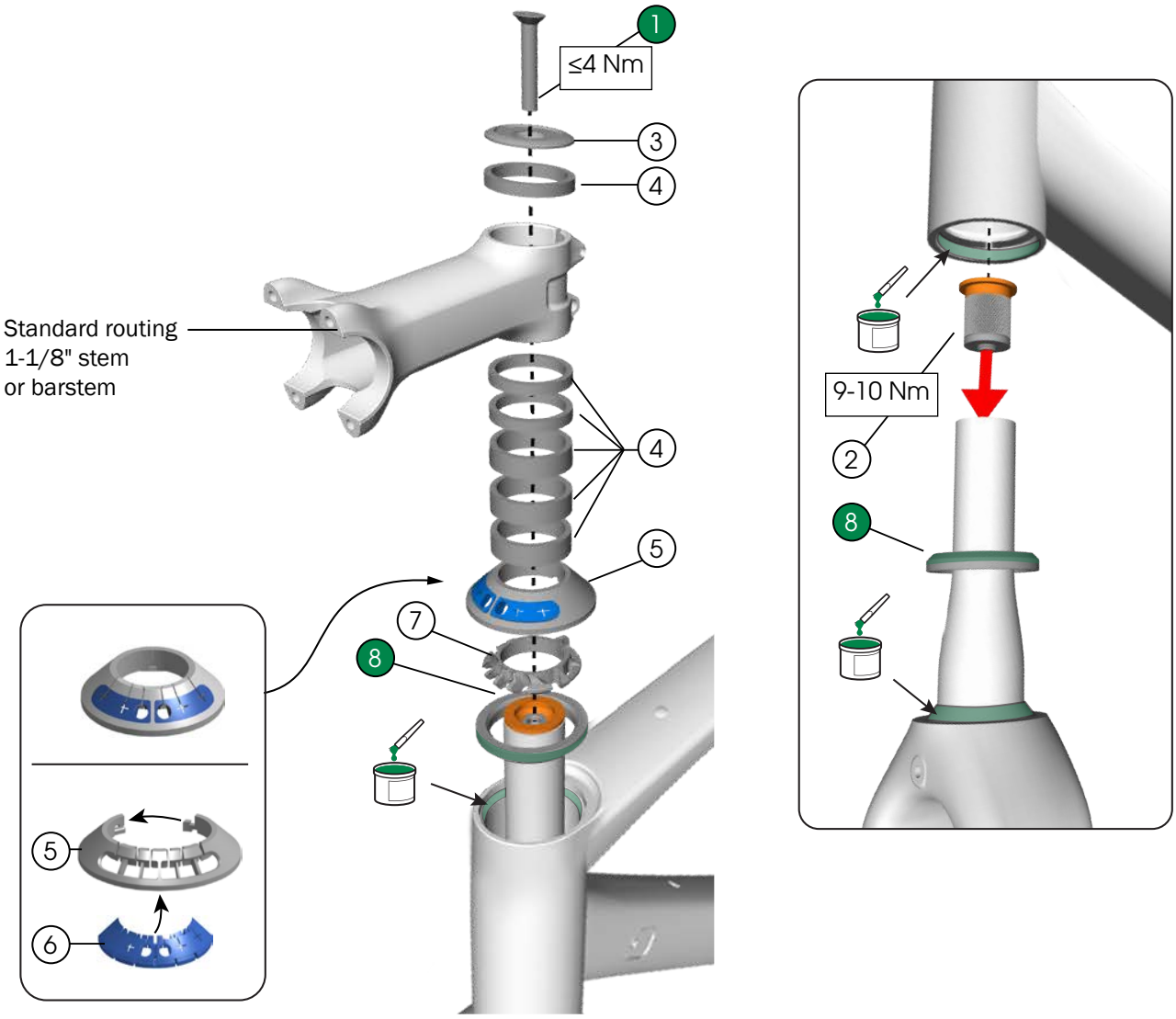

1 Fastener (M6 x 35 mm)

2 Expander plug

3 Top cap

4 Spacers (1-1/8" / 28.6 mm)
- 5 mm — *5253930*
- 10 mm — *5253931*

5 Bearing top cover

6 Grommet, bearing top cover — *W5325211*

7 Split ring — *W5315339*

8 Bearings — *W5322818*



4 — *W547432*

RCS Universal spacers

NOTE: If you remove spacers below the stem, you must add the same height of spacers above the stem or cut the steerer tube.

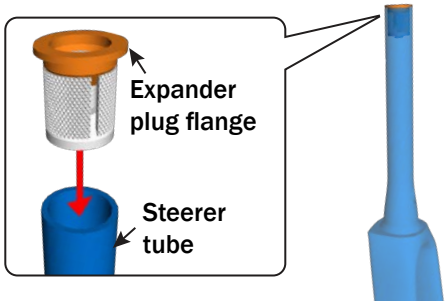

WARNING

Do not exceed 40 mm of headset spacers above or below the stem. If there are more than the maximum height of spacers, the steerer tube could become damaged and break, causing a crash resulting in injury.

NOTE: Other stem types are compatible with this headset system. A spacer above the stem may not be required.

Below stem

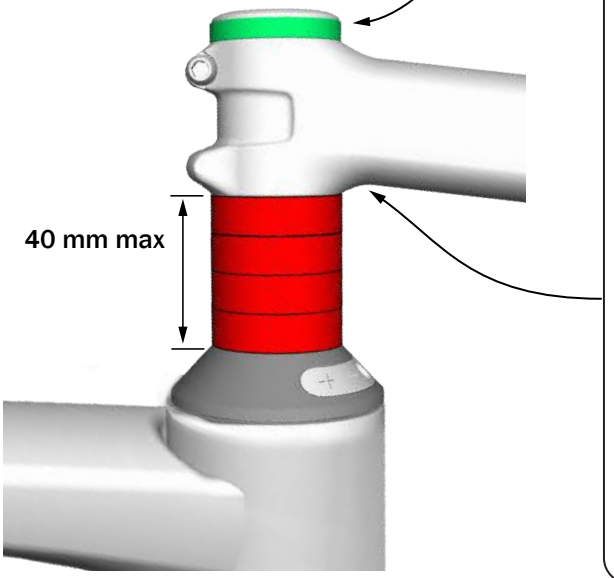

The steerer tube must sit flush or slightly below the top of the stem (0-2 mm).

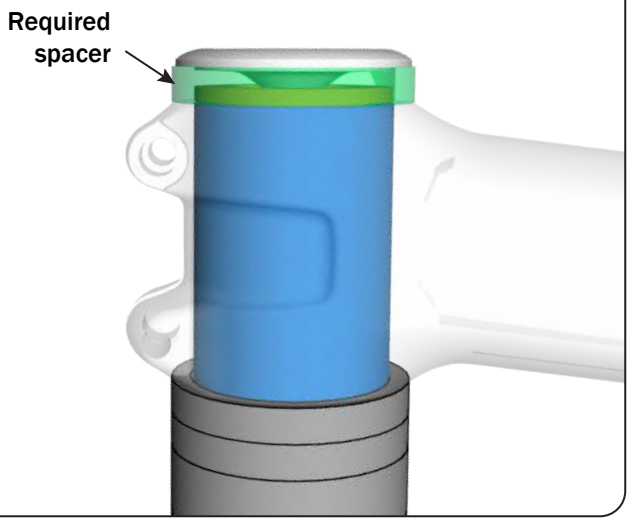

Above stem

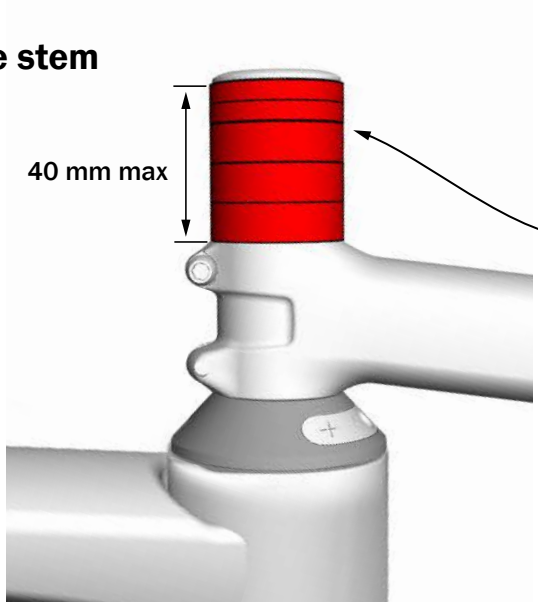

If there are any spacers above the stem, the expander plug flange must extend 3-4 mm into the top spacer.

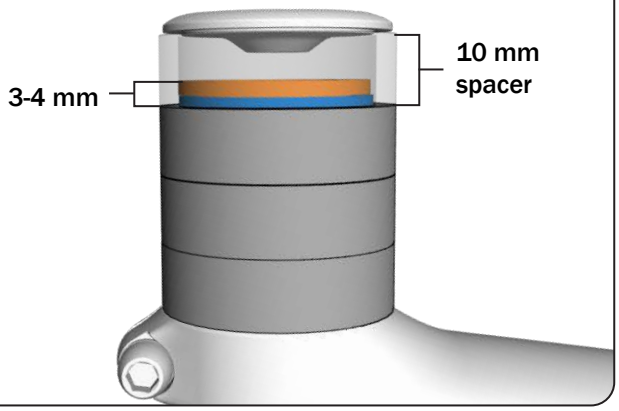

Install the RCS Universal

Before you begin:

- Install derailleur(s) and brake calipers.
- Route all cables/hoses through the frame/fork and connect them to the derailleurs/calipers.
- Make sure the steerer tube is the correct length for the stack/spacer height (see RCS Universal spacers).

1.

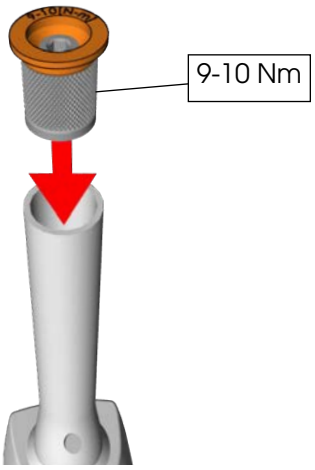

2.

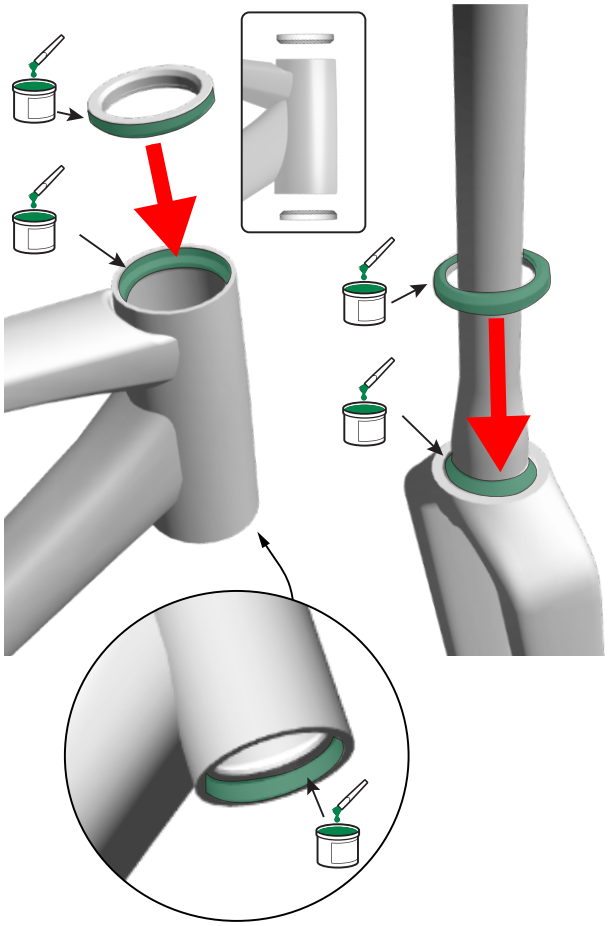

3.

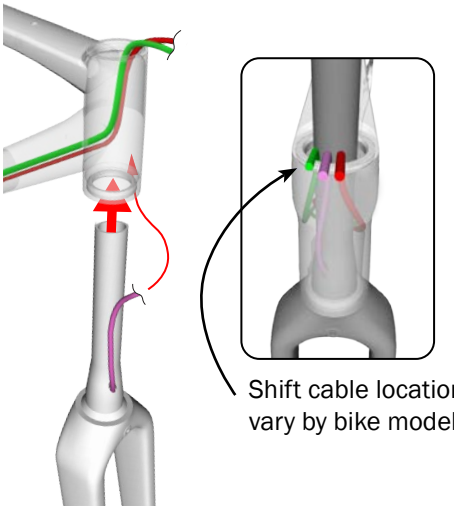

Shift cable location may vary by bike model.

4.

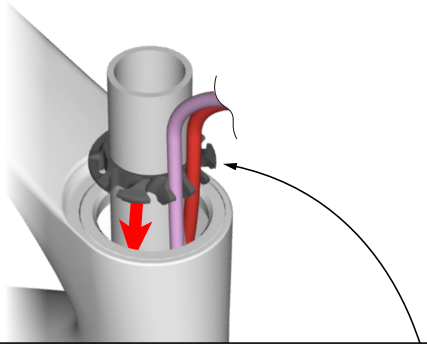

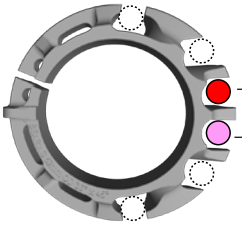

Suggested locations:

Rear brake hose

Front brake hose

Your bike may use additional cables not shown here. Refer to model-specific cable routing in the bike service manual. Search by bike name and model year: trekbikes.com/manuals

Install the RCS Universal (continued)

5. Route the brake hoses/cable housings through the bearing top cover. Then slide the bearing top cover down the steerer tube.

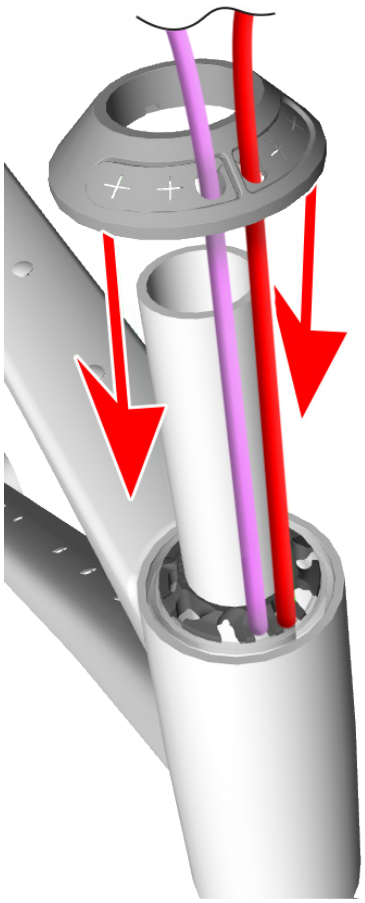

6. Slide the spacers and stem down the steerer tube.

NOTICE: Make sure at least one spacer is above the stem (unless the stem has an integrated spacer).

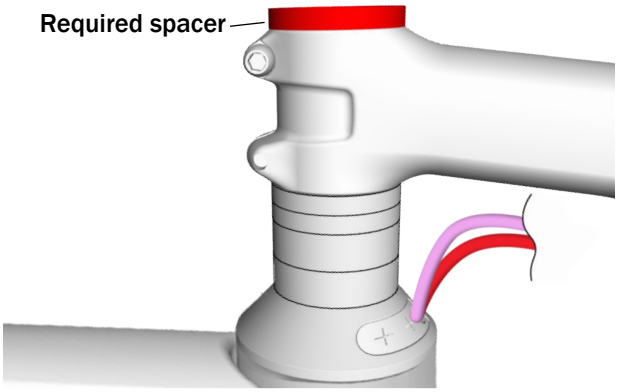

7.

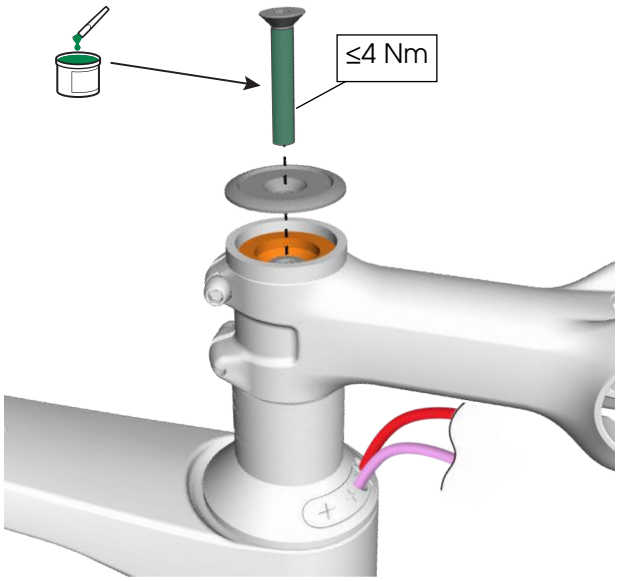

8. Loosely tighten the fasteners to secure the handlebar.

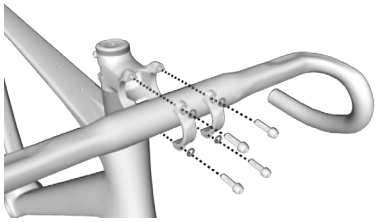

9.

