OWNER'S MANUAL

ELECTRIC BICYCLE

EN

epowered by BOSCH

The Smart System (20 mph)

TREK

IT IS IMPORTANT TO READ THE WARNINGS AND INSTRUCTIONS IN THIS MANUAL BEFORE RIDING YOUR NEW BICYCLE.

WELCOME

Welcome to our bike family
Thank you for purchasing your new bike.

We believe in bikes. We make high quality bikes that are built to last.
That is why each bike we make comes with a limited lifetime warranty.
We wish you many carefree and enjoyable cycling kilometers with your new bike!

However, if you experience any problems with your bike, do not hesitate to contact your local retailer.
If the problem persists, please call our customer service for a solution.

www.trekbikes.com

CONTENTS

Welcome 3

Important to read before the first ride 5

The Bosch drive system (20 mph) 9

Intuvia 100 controller 27

Purion 200 controller 45

Purion 400 controller 65

Kiox 300 | 500 controller 83

LED Remote 103

Display mount 121

Smartphone Grip 133

System Controller | Mini Remote | Mini Remote Dropbar 149

Drive unit Performance Line SX | Performance Line Sprint 169

Drive unit Active Line | Active Line Plus | Performance Line | Performance Line Sport 183

Drive unit Performance Line CX | CX Race Limited Edition | Performance Line Speed | Cargo Line 197

Drive unit Performance Line CX | Performance Line Speed 211

CompactTube 400,
PowerTube 500 | 600 | 625 | 750 | 800,
PowerPack Rack 400 | 500,
PowerPack Frame 400 | 545 | 725 | 800 225

PowerMore 250 259

Charger 279

Connect Module 297

Contact 307

IMPORTANT TO READ BEFORE THE FIRST RIDE

US Customer: Supplemental Product Information

The most important points for you to do

1. Even if you have ridden a bicycle for years, it is important for every person to read the general "Bicycle Owner's manual" and the specific "Electric Bicycle Owner's manual" carefully before you ride on the new electric bicycle.

- Both manuals contains detailed information and useful suggestions about your new bicycle.
- Make sure that you understand the proper use, maintenance, and disposal of the components of the electrical system of your new electric bicycle.

2. Think about safety. Your safety and that of other road users is very important.

- Do not ride the electric bicycle without the battery. The battery must be on the bicycle while riding, else the bicycle has no lights when needed.
- Check your bicycle for normal operation, loose parts and defects before riding. If you find any problem, visit your bicycle dealer for repairs before riding.
- Be aware that other road users (cars, trucks, motorcycles) do not expect that an electric bicycle can ride faster than a normal bicycle. Riding faster also increases the risk of accidents.
  Distances will close much faster, and braking distances will become longer.
- Do not ride abusively. Only ride in the use conditions specified for your bicycle:
  - Electric City/Trekking bicycles are approved for Condition 1 (paved roads with tires staying on the ground).
  - Electric Mountain bicycles are approved for Condition 3 (rougher surfaces, jumps of not more than 24 in (61 cm)).

  Please refer to the general Bicycle Owner's manual for more detailed information.
- Do not overload the rear rack. The maximum allowable weight for the rear rack on electric bicycles is 44 lb (20 kg) for bicycles with a rear rack battery and 55 lb (25 kg) for bicycles with a down tube battery. On bicycles with a luggage rack at both sides of the rear fender only, without a top deck, the maximum allowed load on the rack is 33 lb (15 kg) in total.

3. The electric system of your new bicycle needs special attention.

- Do not clean your electric bicycle with a high pressure washer. Any electrical system is sensitive to moisture. High pressure water might enter connectors or other parts of the electric system.
- Handle your battery with care. Do not drop or impact the battery. Mishandling of the battery could lead to severe damage or over-heating. In an extremely rare case, a battery that has been severely impacted or otherwise mishandled could potentially catch fire.
  If you suspect damage to your battery, visit your dealer immediately for inspection.

4. Maintain the battery as instructed in this Bicycle Owner's manual.

Failure to follow these instructions may result in damage to your battery and may require battery replacement:

- Only charge the battery with the included Bosch charger.
- When not using the battery for a longer period, charge it to approximately 60% (three to four LEDs lit on the charge-control indicator). Check the charge condition after six months. When only one LED of the charge-control indicator lights up, recharge the battery again to approximately 60%.
- Once charging the battery is complete, unplug the battery from the charger and unplug the charger from the wall socket.
- A Li-Ion battery will self-discharge over time. If the battery is left uncharged, then stored without charging, it may discharge to such a low state that the battery can no longer be charged and must be replaced.
- Store the battery in a dry, well-ventilated location. Protect the battery against moisture and water.
- Under unfavorable weather conditions, it is recommended e.g. to remove the battery from the bicycle and store it in a protected location.
- The battery can be stored at temperatures between 14°F (-10°C) and 140°F (+60°C). For a long battery life, however, it is best to store the battery at room temperature of approximately 68°F (20°C) is of advantage.
- If the bicycle is not ridden for an extended time, do not store the battery on the bicycle.

5. Be careful when transporting an electric bicycle.

- An electric bicycle is heavier than a normal bicycle. If transporting on a vehicle, be aware of the maximum load capacity of the vehicle's roof, towing hook and/or the bicycle carrier. Refer to the manuals of the vehicle and bicycle carrier for details.
- Remove the controller (if removable), and battery and, if present, panniers from the bicycle and store them elsewhere in the vehicle during the drive.
- Always respect local laws about transportation of an electric bicycle.
- Because Li-Ion batteries of this size and power are considered 'Dangerous goods, class 9' when transporting, regulations may restrict the transport of separate Li-Ion batteries in some places. The restrictions apply to most airlines and some trucking companies. If you intend to ship or travel with your electric bicycle (with installed battery), check with the airline or carrier and local regulations about traveling with a Li-Ion battery.

6. Obey local regulations.

In most countries the regulations for the use of an electric bicycle are the same as those for a standard bicycle. However, there may be local differences such as where you can ride, minimum rider age, or required equipment and registration. It is the rider's responsibility to know the local regulations that apply to an electric bicycle and to obey them.

7. Mounting accessories on an e-bike.

An electric bike has hidden wiring through frame and has other critical e-bike parts like the drive unit and battery pack. When mounting accessories (e.g. a bottle cage), be sure not to impact the wiring or battery pack, e.g. by using too long or pointed bolts. This might cause a short circuit to the electric system and/or damage to the battery.

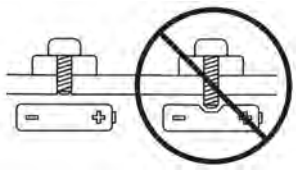

⚠ Warning. A short circuit in the electric system and/or damage to the battery might lead to over-heating. In an extremely rare case, a battery pack that has been severely impacted could potentially catch fire.

8. Visit your dealer on a regular basis for maintenance of your new bicycle.

- Your dealer has the right knowledge and equipment to maintain your e-bike and to mount accessories safely.
- If you have questions about your new electric bicycle, ask your dealer!

Limited warranty

Your bicycle is covered by a Lifetime Limited Warranty. Please visit our web site for details.

Owner's Manual

Drive Unit | On-board computer | Display Mount | Remote Control | ConnectModule | Battery | Charger (20 mph)



en Original operating instructions

This manual contains important safety, performance and service information. Read and understand it along with the information provided to you by your bicycle manufacturer before using the product, and keep it for reference.

Drive Unit

BDU314x
BDU332x
BDU334x
BDU336x
BDU374x
BDU376x
BDU384x

On-board Computer

BHU3200
BHU3500
BHU3600
BHU3700

SmartphoneGrip

BSP3200

ConnectModule

BCM3100

Display Mount

BDS3210
BDS3250
BDS3620
BDS3630

Remote Control

BRC3100
BRC33xx
BRC3600
BRC3800

Battery

BBP324x
BBP334x
BBP335x
BBP354x
BBP355x
BBP356x
BBP357x
BBP358x
BBP362x
BBP375x
BBP376x
BBP377x
BBP386x
BBP388x

Charger

BPC3210 (USA)
BPC3410 (USA)

Display Cable

BCH3611

Table of contents

Introduction 2
About Warnings 2
General Warnings 2
Using Your Operator's Manual 3
Bosch Drive System Overview 4
Bicycle View (PowerTube) 4
Bicycle View (PowerPack Frame) 5
Bicycle View (PowerPack Rack) 6
Bicycle View (PowerMore) 7
Operating your Bosch Drive System 8
Getting Ready to Ride 8
Safe Start-up Procedure 10
Notes on cycling with the eBike system 11
Transport 12
Maintenance/Cleaning 12
Battery Recycling Program 14

Introduction

Thank You for Purchasing a Bosch Drive System Equipped Bicycle!

Your Bosch eBike Systems team appreciates having you as a customer and wishes you many years of safe and satisfied use of your bicycle.

Some content is published under license from the **PeopleForBikes Coalition, LTD**.

About Warnings

This manual contains many **DANGER**, **WARNING** and **CAUTION** indicators concerning the consequences of failure to use, assemble, maintain, store, inspect and dispose of a Bosch-equipped eBike in a safe manner.

- The combination of the safety alert symbol and the word **DANGER** indicates a hazardous situation that, if not avoided, will result in death or serious injury.
- The combination of the safety alert symbol and the word **WARNING** indicates a hazardous situation that, if not avoided, could result in death or serious injury.
- The combination of the safety alert symbol and the word **CAUTION** indicates a hazardous situation that, if not avoided, could result in minor or moderate injury.

General Warnings



Read all safety warnings and all instructions. Failure to follow the warnings and instructions may result in death, property damage or serious injury.

Save all safety warnings and instructions for future reference.

The term **eBike battery** used in these operating instructions refers to all original Bosch eBike batteries from the system generation **the smart system**.

Riders and passengers must be aware of and follow all applicable rules and regulations related to the operation or use of eBikes in their local jurisdiction when operating or otherwise using this product. This eBike system has the capability to provide pedal assistance up to 20 mph. Riders must have the reaction, capabilities, experience, maturity, coordination and ability to control a bike at such speed, and to manage traffic, road conditions, inclement weather, carrying passengers or cargo and sudden situations, and also to respect the laws and instructions governing bicycle use. In addition, some jurisdictions may set a minimum age for the riders and passengers of this eBike. Please check your local jurisdiction for any applicable legal requirements and restrictions.

⚠ WARNING

- ▶ **This manual contains important safety, performance and service information.** Read it before you take the first ride on your new bicycle, and keep it for reference. The manual can also be found online at www.bosch-ebike.com.
- ▶ **This manual is intended to be read together with the separate user manual provided with your bicycle.** Be sure to read all provided documents including labels on the product before your first ride.
- ▶ **Read ALL accompanying manuals before riding the bike for the first time.** Your Bosch Drive System comes with additional manuals and documents provided by the manufacturer of the bicycle and other components. Failure to read and understand safety information can result in death or serious injury.
- ▶ **Take responsibility for your own SAFETY.** If you have any questions or do not understand some-

thing, consult with your dealer or the bicycle or component manufacturer.

- ▶ **Some eBike accessories may present a choking hazard to small children.** Keep these accessories away from children.

⚠ CAUTION

- ▶ **The Bosch Drive System adds weight to your bicycle which you may not be used to lift.** Avoid injury, use proper lifting techniques.

Using Your Operator's Manual

Your operator's manual consists of several parts:

- – Operating instructions for the Bosch eBike system (this manual)
- – Operating instructions for the drive unit
- – Operating instructions for the display, the on-board computer or a smartphone holder
- – Operating instructions for the display holder, on-board computer holder or smartphone holder
- – Operating instructions for the control unit
- – Operating instructions for the charger
- – Operating instructions for the eBike battery
- – Operating instructions for the ConnectModule

- ▶ **Read and observe the safety warnings and instructions in all operating instructions of the eBike components and your eBike.**
- ▶ **It is recommended that you periodically review this information to ensure you are following all recommendations for safe use of this product.**
- ▶ **Ownership, operation, charging and maintenance of an eBike involve certain risks and hazards, which can be minimized by following safe practices addressed in this Manual.** Your knowledge of and adherence to those practices are essential to your safety, the safety of others, and the protection of property, including your eBike.

Graphics

The bicycle shown in this manual may differ slightly from your bicycle, but will be similar enough to help you understand our instructions.

RIGHT-HAND and LEFT-HAND sides are determined by facing in the direction the bicycle will travel when going forward. When you see a broken line (------), the item referred to is hidden from view.

Bosch Drive System Overview

Bicycle View (PowerTube)

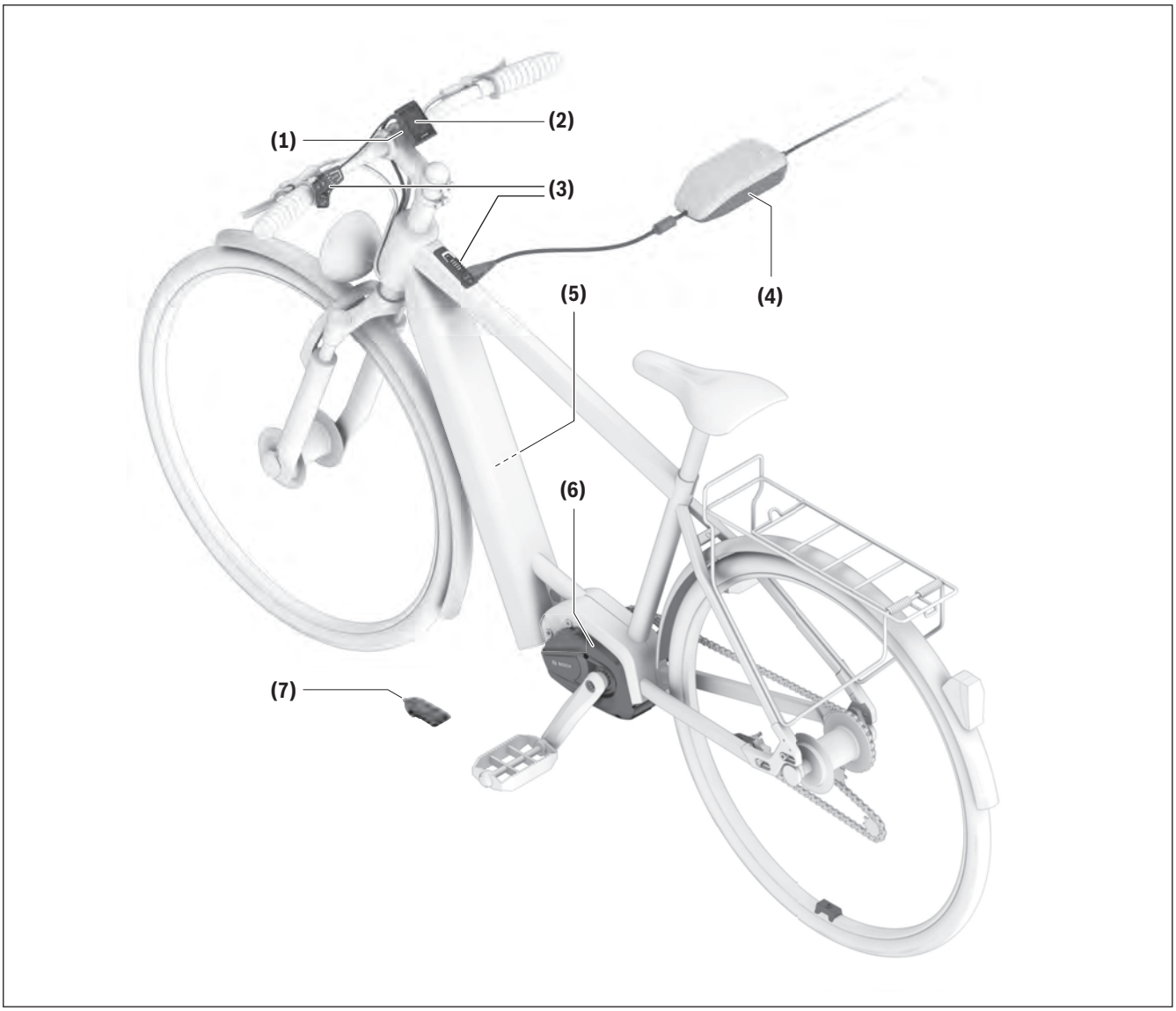

Bosch Drive System Components

All representations of bike components are schematic and can deviate from your eBike.

(1) Display holder
(2) Display/on-board computer
(3) Control unit
(4) Charger
(5) Frame-mounted battery "PowerTube"/"CompactTube"
(6) Drive unit
(7) ConnectModule

Bicycle View (PowerPack Frame)

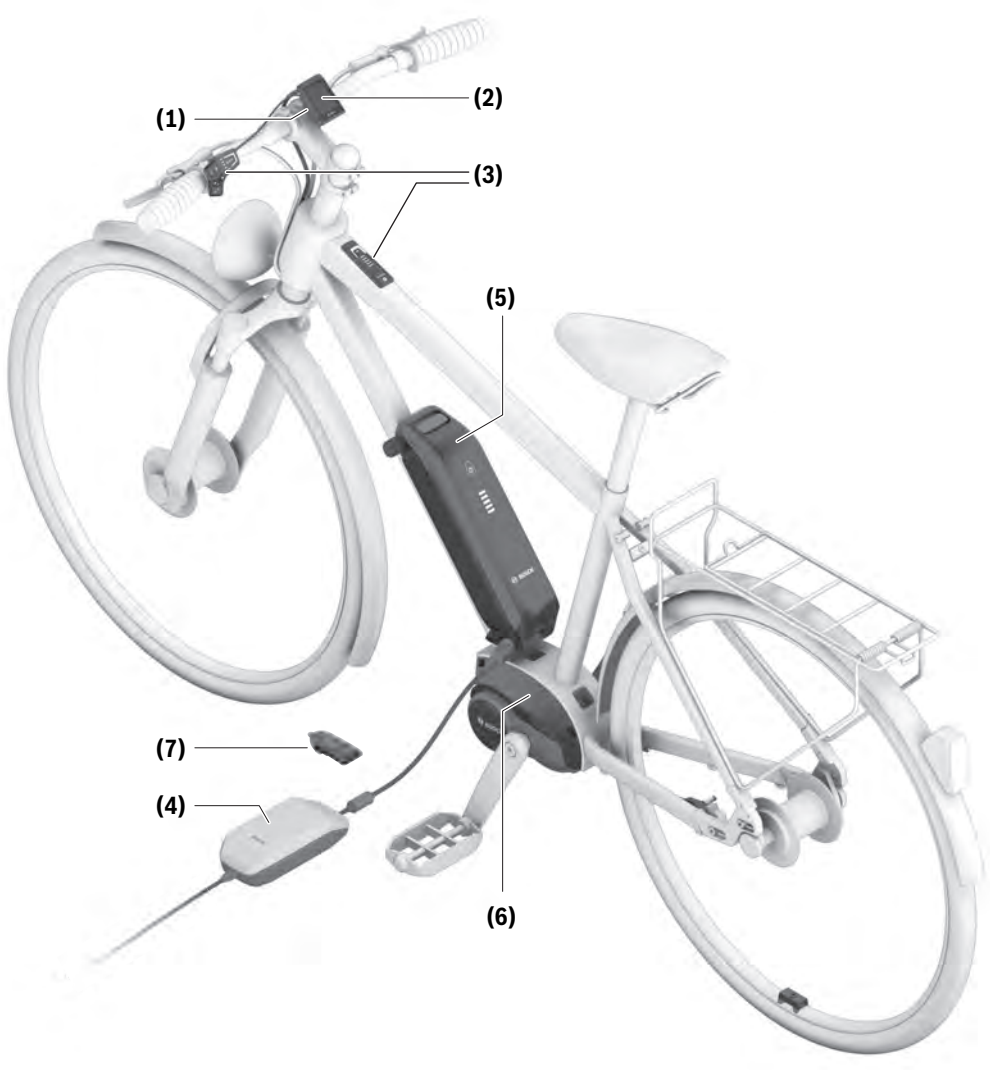

Bosch Drive System Components

All representations of bike components are schematic and can deviate from your eBike.

(1) Display holder
(2) Display/on-board computer
(3) Control unit
(4) Charger
(5) Frame-mounted battery "PowerPack"
(6) Drive unit
(7) ConnectModule

Bicycle View (PowerPack Rack)

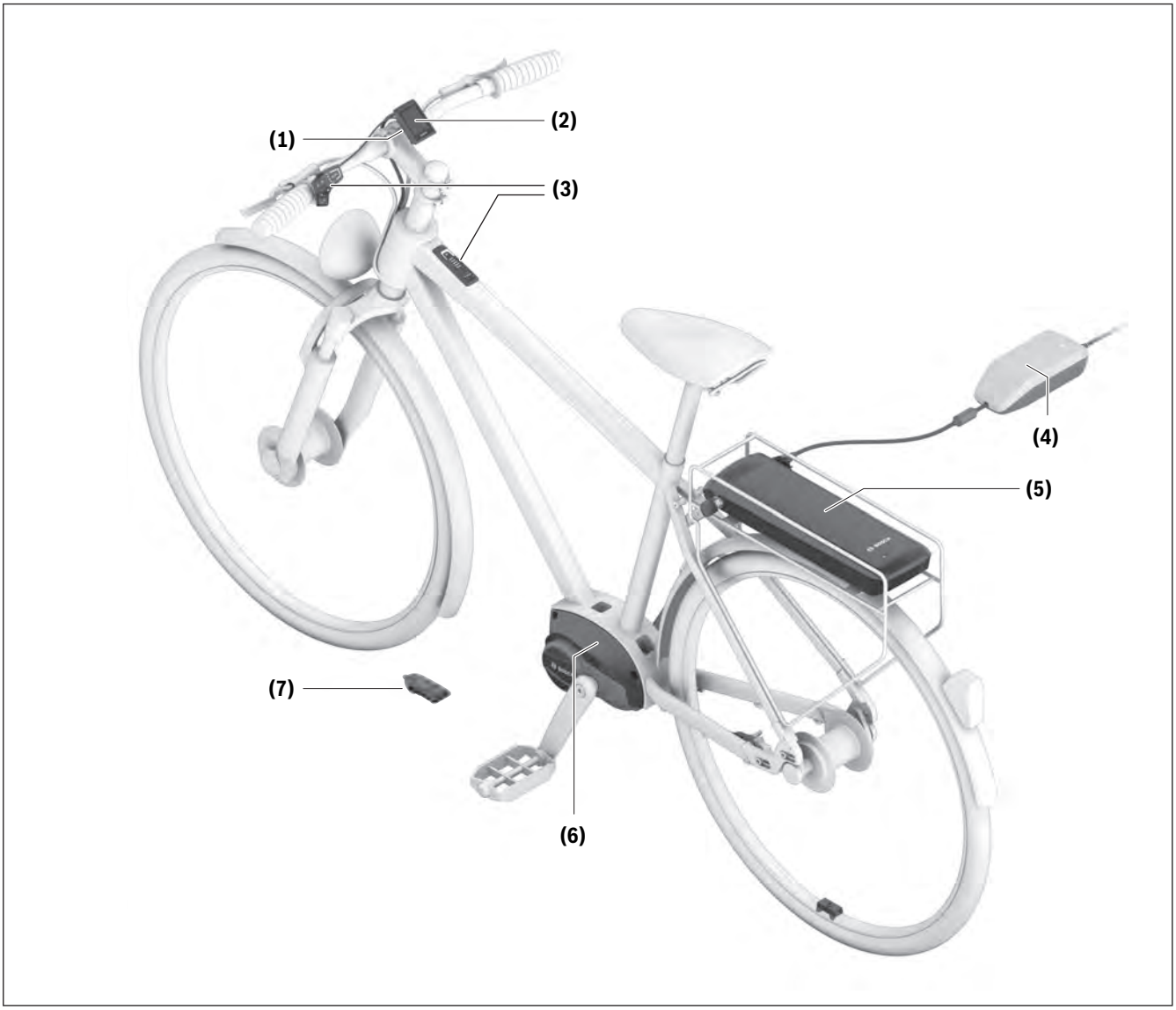

Bosch Drive System Components

All representations of bike components are schematic and can deviate from your eBike.

(1) Display holder
(2) Display/on-board computer
(3) Control unit
(4) Charger
(5) Rack-mounted battery "PowerPack"
(6) Drive unit
(7) ConnectModule

Bicycle View (PowerMore)

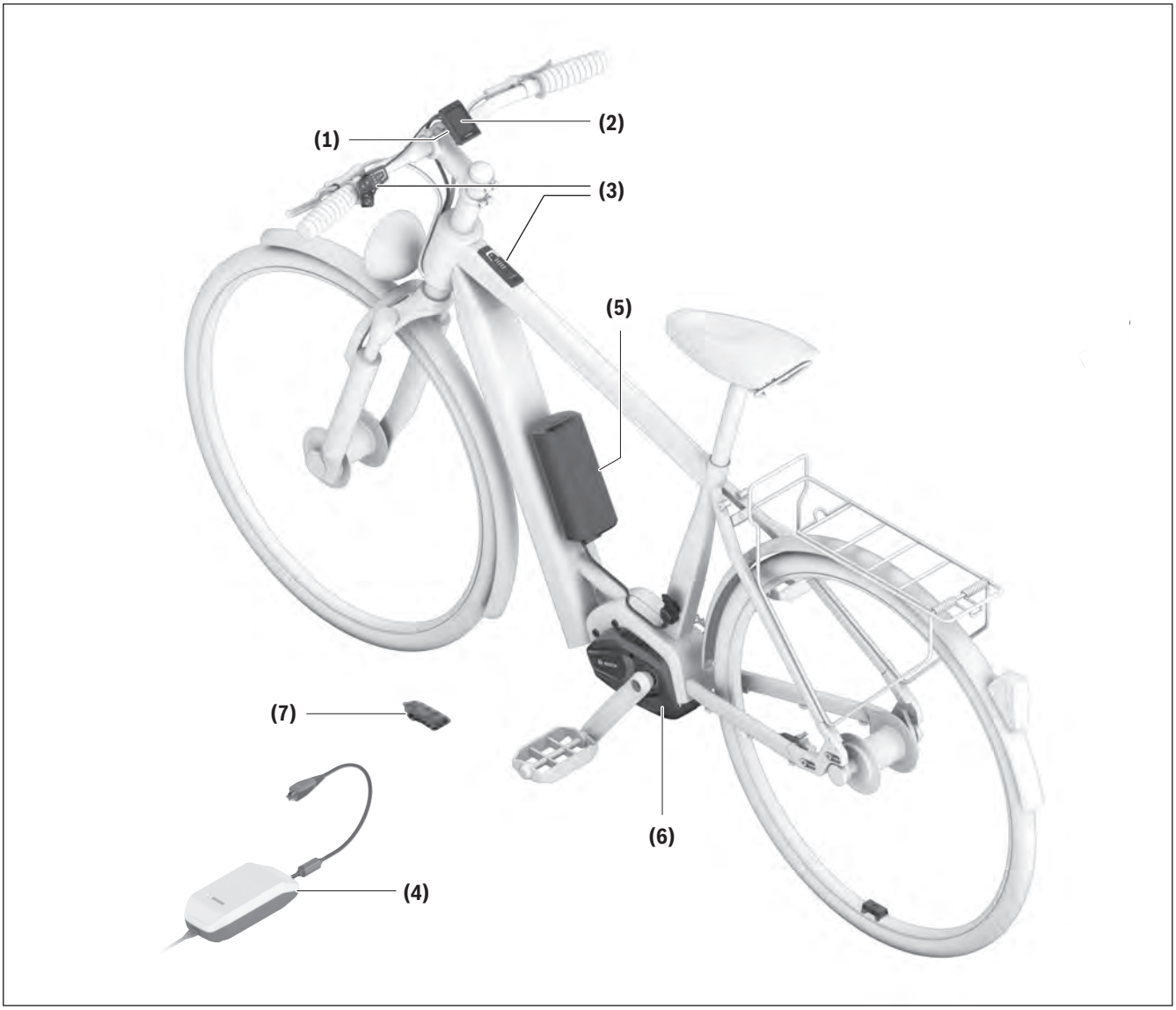

Bosch Drive System Components

All representations of bike components are schematic and can deviate from your eBike.

(1) Display holder
(2) Display/on-board computer
(3) Control unit
(4) Charger
(5) Frame-mounted battery "PowerMore"
(6) Drive unit
(7) ConnectModule

Operating your Bosch Drive System

Getting Ready to Ride

Read and understand all safety warnings and instructions. Failure to follow the below warnings could result in death or serious injury.

- ▶ **Protect others from death or serious injury. Prevent unauthorized use.** Always remove battery from the bicycle when not in use and store in a secure location. Failure to secure your bicycle from unauthorized use can result in death or serious injury to others.
- ▶ **Never loan your eBike to another person or let another person operate your eBike unless they are familiar with the instructions and warnings in this Manual and competent to operate an eBike.** Allowing a person to operate an eBike who lacks the knowledge or ability to safely do so may result in serious injury or death.
- ▶ **Read and understand the influences on the operating range planning your ride** (see "Influences on range", page English – 11).

Before your first ride

Check your bicycle owner's manual for important information about the bike components, such as the brakes, pedals, gears, gear shifting, etc.

⚠ WARNING

- ▶ **If you have an impairment or disability such as a visual impairment, hearing impairment, physical impairment, cognitive/language impairment, or a seizure disorder, consult your physician before using this product.**
- ▶ **To reduce the risk of serious injury related to exercise, take the following precautions before use: Do not overexert yourself.** Use of the Bosch Drive System requires varying amounts of physical activity.

Consult a doctor before using the device if you have any medical condition or issue that affects your ability to safely perform physical activities, or if you:

- – are or may be pregnant
- – have heart, respiratory, back, joint, or other orthopedic conditions
- – have high blood pressure
- – have difficulty with physical exercise
- – have been instructed to restrict physical activity

- ▶ **Riding a Bosch drive system equipped bicycle capable of speeds up to 20 mph requires proficiency in the activity of road cycling.** eBikes are heavier, accelerate faster, can achieve higher speeds more quickly and maintain those speeds for longer periods of time compared to regular bicycles. These features can dramatically affect the handling, braking and cornering of your eBike, which means you must exercise more caution around other people and when cornering, accelerating and slowing down. Higher speed results in higher forces if a crash occurs. Control your bicycle at all times. Your risk of death or serious injury increases with both speed and age.

The following is required for safe use of this product:

- – Knowledge of the laws/safety guidelines/rules of road cycling (riding safely)
- – Ability to operate and control a standard road bike
- – Experienced rider who is actively riding
- – Capable, comfortable and confident riding safely at speed up to 20 mph
- – Your bike should match your riding style, be properly adapted to the dimensions of your body, and be well maintained.

- ▶ **Do not use this product under the influence of drugs and/or alcohol.**

⚠ WARNING

- ▶ **While riding, do not become distracted by the onboard computer and always remain alert to all**

riding conditions. The on-board computer should only be used in a stationary and safe start-up position. Utilize the operating unit to change motor assistance levels while riding.

- ▶ **Check your bicycle manual for maximum riding weight of your bicycle.** Overloading your bicycle can result in component failure which can result in death or serious injury. Typically maximum riding weight is defined by the sum of the rider's weight plus the weight of any luggage and/or passenger.
- ▶ **Wearing a helmet can prevent a severe head injury. Whenever riding, rider and passenger must always wear a helmet that meets or exceeds established safety standards.** Approved helmets in the USA must meet the US Consumer Product Safety Commission standard, so look for a CPSC reference.
- ▶ **Some eBikes may not be suitable for some children.** Consult the documentation provided by the manufacturer of your eBike for any information about age recommendations or restrictions. Parents must ultimately be responsible to determine whether their child is physically, mentally and emotionally capable of safely operating an eBike, including understanding and following all warnings and instructions in this Manual. Allowing a child who lacks the capability to safely operate an eBike to do so may lead to a crash resulting in serious personal injury or death.
- ▶ **Some states have age restrictions for transporting passengers.** A child must be of age to ride an eBike independently, or be of age as specified by the manufacturer to be a passenger on an eBike, unless the child is in an approved child carrier that has been properly fitted. Transporting a child that does not meet the age/physical requirements to be a passenger and/or is not in an approved child carrier can result in serious personal injury or death.
- ▶ **Do not modify or alter your eBike, or install additional equipment with the intention of increasing the performance and/or top speed of the eBike.** Modifying an eBike to increase its performance or speed may be unlawful and can result in component failure or a loss of control, leading to a crash resulting in serious injury or death. A modified eBike may no longer be regulated as an eBike, placing the operator at risk of personal liability and criminal prosecution in the event of a crash. Any alterations can negatively affect the lifespan of the eBike and its components, and can result in damage to the drive system.
- ▶ **Components can reach very high temperatures during use, especially when the eBike is subjected to high loads at low speeds, resulting in poor air movement around the eBike.** For example, riding up a long, sustained hill, riding with a heavy load, or riding down a long hill with prolonged brake application, can result in one or more systems generating significant heat. Avoid touching any part of the battery housing, drive system or brake system with exposed skin (e.g., hands or legs). Contact with hot components can result in burns if touched.

Intended Use

⚠ WARNING

- ▶ **Understand your bike and its intended use by consulting your bicycle owner's manual.** Using your bike in an unintended manner can result in death or serious injury.
- ▶ **The Bosch Drive System components are intended exclusively for your eBike and must not be used for other purposes or vehicles.**

Your Bosch drive unit is not intended for towing another bicycle. For trailer towing, consult your bicycle owner's manual and trailer owner's manual for towing instructions and towing compatibility.

Safe Start-up Procedure

⚠ WARNING

▶ **Follow the safe start-up procedure below.** Failure to follow safe start-up procedure can result in death or serious injury.

Preparations

Before starting check the following:
- Check that you have unplugged the battery charger.
- Your battery pack is locked in place (Pull on the battery pack to ensure it is locked in place).
- Remove the battery pack key.

Start Riding

- Sit in the saddle with both feet touching the ground and two hands on the handlebars.
- Once you are in a stable position, turn on the Bosch on-board computer. The Bosch Drive System will always start up in **OFF** mode.
- Place both hands on the handlebars and begin pedaling.

Notes on cycling with the eBike system

When does the drive take effect?

The drive assists your cycling only when you are pedaling. If you do not pedal, the assistance will not work. The drive output always depends on the pedaling force and cadence that you apply.

With a lower force applied or a less frequent cadence, the assistance provided will be lower than that supplied at a higher force or a more frequent cadence. This applies irrespective of the riding mode.

The drive automatically switches off at speeds over **20 mph**. When the speed falls below **20 mph**, the drive automatically becomes available again.

An exception applies to the push assistance function, in which the eBike can be pushed at low speed without pedaling. The pedals may rotate when the push assistance is in use.

You can also use the eBike as a normal bicycle without assistance at any time, either by switching off the eBike or by setting the riding mode to **OFF**. The same applies when the eBike battery is drained.

Interaction of the drive unit with the gear-shifting

You should shift through gears on an eBike in the same manner as when using a normal bicycle (observe the operating instructions of your eBike with regard to this point).

Irrespective of the type of gear shifting, it is advisable that you briefly reduce the pressure on the pedals when changing gear. This will aid gear shifting and reduce wear on the powertrain.

By selecting the correct gear, you can increase your speed and range while applying the same amount of force.

Test the range of your eBike in different conditions before planning longer and more demanding trips.

- ▶ **Read and understand the influences on the operating range planning your ride** (see "Influences on range", page English – 11).

Influences on range

The range is affected by a number of factors, such as:

- Riding mode
- Speed
- Gear shifting behavior
- Tire type and tire pressure
- Age and condition of the eBike battery
- Route profile (gradients) and conditions (road surface)
- Headwind and ambient temperature
- Weight of eBike, rider, passenger and luggage.

For this reason, it is not possible to predict the range accurately before and during a trip. However, as a general rule:

- With the **same** riding mode on the drive: The less energy you need to exert in order to reach a certain speed (e.g. by changing gears optimally), the less energy the drive will consume and the higher the range per battery charge will be.
- The **more powerful** the selected riding mode under otherwise constant conditions, the smaller the range will be.

Note: Plan your routes so that you can always reach your destination without drive assistance.

Transport

- **Always remove the battery pack (except fixed mount battery pack) from the bicycle before transporting the bicycle on a vehicle bike rack.** Failure to remove the battery pack when using a vehicle bike rack can lead to death or serious injury. The battery may detach during transport and cause an accident to following vehicles.
- **Always use an approved and compatible bicycle rack when transporting your eBike. The Bosch drive system adds weight to the bicycle.** Refer to your bicycle rack manual to be sure your eBike is compatible. Overloading a bike rack can result in death or serious injury.
- **Use proper lifting techniques as electric bikes are generally heavier than bicycles.**

Ship batteries only when the housing is undamaged. Tape or mask off open contacts and pack up the battery in such a manner that it cannot move around in the packaging. Inform your parcel service that the package contains dangerous goods. Please also observe possibly more detailed national regulations. Always check state and federal regulations before attempting to ship your battery.

- **If you transport your eBike attached to the outside of your car, e.g. on a bike rack, remove the on-board computer and the eBike battery (except fixed mount battery) to avoid damaging them.**

If you have any questions about transporting the eBike batteries, contact an authorized bicycle dealer.

Maintenance/Cleaning

- **The drive system does not contain any user-serviceable parts. Do not attempt to open, disassemble, modify, adjust or service any parts of the drive system components. Any tampering with the internals of the motor, battery or other drive system components can result in damage, which can cause serious injury or death. eBike service and repair tasks require special knowledge and tools. Service and repair should only be carried out at an authorized Bosch eBike dealer.** Failure to follow above warning can cause death or serious injury. Refer to your bicycle manual or component manual for all non-Bosch drive system components.
- **Always remove the battery pack before performing any bicycle inspection, maintenance or repair.** Failure to remove the battery pack before performing bicycle inspection, maintenance or repair can lead to serious injury.
- **If you suspect that something is loose, do not ride your bike.** See your Bosch eBike dealer, only a qualified service provider should perform work on your Bosch Drive System. All nuts, bolts, screws require the correct tightening force. Too little force and the fastener may not hold securely. Too much force and the fastener can strip threads, stretch, deform or break. Either way, incorrect tightening force can result in component failure, which can cause you to lose control and fall.
- **If replacing your battery, buy only a genuine Bosch battery pack from an approved source. See your Bosch eBike dealer for original Bosch parts.**
- **Always switch the battery pack off, when inserting or removing it from the holder.** Never attempt to insert or remove the battery pack while riding the bike.
- **Do not charge or use your eBike in any area with a potentially explosive atmosphere, such as at a fueling area, or in areas where the air contains chemicals or particles (such as grain, dust, or metal powders).** Obey all signs and instructions.
- **Do not expose the drive system to excessive water. Never fully submerge the drive system or use a pressure-washer to clean your eBike.** Exposure of the battery or internal components of the

drive system to water can result in serious damage to the system components.

- ▸ **Note down the manufacturer and the number of the key.** In case of loss of the keys, please refer to an authorised Bosch eBike dealer. Please provide the name of the manufacturer and the number of the key.
- ▸ **Do not apply any cleaning agents, paint or chemicals to any components of the Bosch drive system as they may cause premature failure of the component.**
- ▸ **Remove the eBike battery from the eBike before beginning work (e.g. inspection, repair, assembly, maintenance, work on the chain, etc.) on the eBike. When working on permanently installed eBike batteries, take particular care to ensure that the eBike cannot be switched on.** Unintentional activation of the eBike poses a risk of injury.
- ▸ **During periodic inspections, also inspect the battery terminals for any signs of corrosion. Also inspect any visible wiring.** Frayed or otherwise damaged wires, loose or corroded plugs, or bad connections can result in damage to the drive system and should be inspected and replaced as necessary by your authorized Bosch eBike dealer.

Taking care of your eBike

Please observe the operating and storage temperatures of the eBike components. Protect the drive unit, on-board computer and eBike battery against extreme temperatures (e.g. from intense sunlight without adequate ventilation). Extreme temperatures can cause the components (especially the eBike battery) to become damaged.

Have your eBike checked by an expert at least once a year (including mechanical parts, up-to-dateness of system software).

Please have your eBike serviced and repaired by an authorized bicycle dealer.

- ▸ **Don't turn the eBike upside down onto the handlebars and seat.** This can result in damage to any handlebar-mounted display or controller components.
- ▸ **Like any mechanical device, an eBike and its components are subject to wear and stress.** Different materials and mechanisms wear or fatigue from stress at different rates and have different life cycles. If a component's life cycle is exceeded, the component can suddenly and catastrophically fail.
- ▸ **A crash or other impact can put extraordinary stress on bicycle components, causing them to fatigue prematurely.**

After-sales service and advice on using products

If you have any questions about the eBike and its components, contact an authorized bicycle retailer.

For contact details of authorized bike dealerships, please visit www.bosch-ebike.com.

Please contact an authorized bicycle dealer if the eBike battery is no longer working.

More information about the eBike components and their functions can be found in the Bosch eBike Help Center.

Cleaning

- ▸ **Do not submerge your eBike components in water, or wash with pressurized hose.** Your Bosch drive unit is designed to be water tight to rain water or non-pressure hose washing.
- ▸ **Dirt and salt from riding in winter or near the ocean, as well as sweat, can be damaging to bicycle components. This includes eBike drive system and wiring parts.** Regularly keep the eBike clean.

Keep all components of your eBike clean, especially the battery pack contacts and corresponding holder contacts. All components including the drive unit may not be immersed in water or cleaned with a high-pressure cleaner. Clean them carefully with a soft, damp cloth (using only mild soap and water).

Battery Recycling Program

The drive unit, on-board computer incl. operating unit, eBike battery, speed sensor, accessories and packaging should be disposed of in an environmentally correct manner.

Do not dispose of eBikes and their components with household waste.

Do not dispose of an eBike battery or any other Lithium- Ion battery in your regular household trash or a public trash receptacle. Batteries that enter the regular waste stream can be damaged, leading to a fire resulting in serious injury, death, property damage and environmental contamination.

You may recycle your Bosch battery pack by calling 1.800.822.8837.

Robert Bosch GmbH
72757 Reutlingen
Germany

www.bosch-ebike.com

0 275 U07 3SC (2024.03) T / 48

Owner’s Manual
Intuvia 100

BHU3200



en Original operating instructions

This manual contains important safety, performance and service information. Read and understand it along with the information provided to you by your bicycle manufacturer before using the product, and keep it for reference.

Table of Contents

Introduction 2
About Warnings 2
General Warnings 2
Using your Manual 3
Operating your Bosch On-board Computer 4
Safety instructions 4
Product Description and Specifications 8
Assembly 10
Operation 11
Displays and settings of the on-board computer 13
Maintenance and Service 15
Maintenance and cleaning 15
After-sales service and advice on using products 15
Transport 15
Battery Recycling Program 15

Introduction

About Warnings

This manual contains many **DANGER**, **WARNING**, and **CAUTION** indicators concerning the consequences of failure to use, assemble, maintain, store, inspect and dispose of a Bosch-equipped eBike in a safe manner.

– The combination of the safety alert symbol and the word **DANGER** indicates a hazardous situation that, if not avoided, will result in death or serious injury.
– The combination of the safety alert symbol and the word **WARNING** indicates a hazardous situation that, if not avoided, could result in death or serious injury.
– The combination of the safety alert symbol and the word **CAUTION** indicates a hazardous situation that, if not avoided, could result in minor or moderate injury.

General Warnings



Read all safety warnings and all instructions. Failure to follow the warnings and instructions may result in death or serious injury.

Save all safety warnings and instructions for future reference.

The term **eBike battery** used in these operating instructions refers to all original Bosch eBike batteries from the system generation **the smart system**.

▶ **Read ALL accompanying manuals before riding the bike for the first time.** Your Bosch Drive System comes with additional manuals and documents provided by the manufacturer of the bicycle and other components. Failure to read and understand safety information can result in death or serious injury.

⚠ WARNING

▶ **This manual contains important safety, performance and service information.** Read it before you take the first ride on your new bicycle, and keep it for reference. The manual can also be found online at www.bosch-ebike.com.

▶ **This manual is intended to be read together with the separate user manual provided with your bicycle.** Be sure to read all provided documents including labels on the product before your first ride.

▶ **Take responsibility for your own SAFETY.** If you have any questions or do not understand something, consult with your dealer or the bicycle or component manufacturer.

▶ **Some eBike accessories may present a choking hazard to small children.** Keep these accessories away from children.

⚠ CAUTION

▶ **The Bosch Drive System adds weight to your bicycle which you may not be used to lift.** Avoid injury, use proper lifting techniques.

Using your Manual

In addition to the functions outlined here, changes to software relating to troubleshooting and functional modifications may be introduced at any time.

Graphics

The bicycle shown in this manual may differ slightly from your bicycle, but will be similar enough to help you understand our instructions.

RIGHT-HAND and LEFT-HAND sides are determined by facing in the direction the bicycle will travel when going forward. When you see a broken line (------), the item referred to is hidden from view.

Operating your Bosch On-board Computer

Safety instructions



Read all the safety and general instructions. Failure to follow the warnings and instructions may result in electric shock, fire and/or serious injury.

Save all safety warnings and instructions for future reference.

The term **eBike battery** used in these operating instructions refers to all original Bosch eBike batteries from the system generation **the smart system**.

The term **drive unit** used in these operating instructions refers to all original Bosch drive units from the system generation **the smart system**.

- **Read and observe the safety warnings and instructions in all operating instructions of the eBike components and your eBike.**
- **Do not attempt to attach the on-board computer or the operating unit while riding!**
- **Do not allow yourself to be distracted by the on-board computer's display, particularly by text overlays shown according to the situation.** The display of riding information does not absolve the rider of the need to exercise due caution. If you do not focus exclusively on the traffic, you risk being involved in an accident. If you want to make entries in your on-board computer other than switching the riding mode, stop cycling and enter the relevant details.
- **Do not operate your smartphone during the journey.** If you do not concentrate exclusively on the traffic around you, you risk being involved in an accident. When using your smartphone, only enter the relevant data once you've stopped.
- **Set the brightness of the on-board computer such that you can adequately see important information like speed or warning symbols.** An incorrectly set on-board computer brightness can result in dangerous situations.
- **Do not open the on-board computer.** Opening the on-board computer can result in irreparable damage and void your warranty.
- **Do not use the on-board computer as a handle.** Lifting the eBike up by the on-board computer can cause irreparable damage to the on-board computer.
- **Do not stand your eBike upside down on its saddle and handlebars if the on-board computer or its holder protrude from the handlebars.** This may irreparably damage the on-board computer or the holder. Also remove the on-board computer before placing the eBike on a wall mount to ensure that the on-board computer does not fall off or become damaged.
- **Caution!** Using the on-board computer with *Bluetooth*® and/or WiFi can interfere with the operation of other devices and systems, including airplanes and medical devices (e.g. pacemakers, hearing aids). Similarly, the possibility that this may cause damage to humans and animals in the immediate vicinity cannot be completely excluded. Do not use the on-board computer with *Bluetooth*® in the vicinity of medical devices, service stations, chemical plants, blasting areas or other areas where there is a risk of explosion. Do not use the on-board computer with *Bluetooth*® in airplanes. Avoid using the device in close proximity to your body over an extended period of time.
- The *Bluetooth*® wordmark and its logos are the registered trademarks and property of Bluetooth SIG, Inc. Any use of this wordmark/these logos by Robert Bosch GmbH, Bosch eBike Systems is under license.
- **The on-board computer is fitted with a radio interface. Local operating restrictions, e.g. in airplanes or hospitals, must be adhered to.**

- ▶ **Do not enter information or make selections while riding.** Interacting with the display or remote control while riding can lead to accidents causing serious injury or death. You must observe road and traffic conditions, and comply with traffic laws at all times.
- ▶ **Accessing other apps, reading pop up messages/other content, or otherwise using your mobile device while operating an eBike may be distracting. Distracted driving is a serious safety concern and can lead to accidents causing serious injury or death. In order to prevent distracted driving, most mobile devices come equipped with a "Do Not Disturb" mode. The "Do Not Disturb" mode should be used while operating an eBike.** Please consult your device-specific instructions for more information. You, as the eBike operator, are fully responsible for ensuring that you pay attention to road conditions and comply with traffic laws at all times.
- ▶ **Do not activate push assistance function while riding on the bike.** Only use push assitance function when pushing the eBike.
- ▶ Please note that certain State or local laws may require that class III eBikes must be equipped with a functioning speedometer that displays speed in miles per hour. Riders must be aware of any and all applicable rules and regulations related to the operation or use of class III eBikes in any applicable jurisdictions before operating or otherwise using this product.

Safety instructions for button/coin cells



⚠ WARNING

INGESTION HAZARD:
This product contains a button cell or coin battery.
DEATH or serious injury can occur if ingested.
A swallowed button cell or coin battery can cause **Internal Chemical Burns** in as little as **2 hours**.
KEEP new and used batteries **OUT OF REACH of CHILDREN**.
Seek immediate medical attention if a battery is suspected to be swallowed or inserted inside any part of the body.
Remove and immediately recycle or dispose of used batteries according to local regulations and keep away from children. Do NOT dispose of batteries in household trash or incinerate.
Even used batteries may cause severe injury or death. Call a local poison control center for treatment information.
Non-rechargeable batteries are not to be recharged. Do not force discharge, recharge, disassemble, heat above 104 °F (40 °C) or incinerate. Doing so may result in injury due to venting, leakage or explosion resulting in chemical burns.
Ensure the batteries are installed correctly according to polarity (+ and −).
Do not mix old and new batteries, different brands or types of batteries, such as alkaline, carbon-zinc, or rechargeable batteries.
Remove and immediately recycle or dispose of batteries from equipment not used for an extended period of time according to local regulations.
Always completely secure the battery compartment. If the battery compartment does not close securely, stop using the product, remove the batteries, and keep them away from children.

- ▸ **Only use the button/coin cells listed in this operating manual.** Do not use any other button/coin cells or other forms of electrical power supply.
- ▸ **Do not damage the button/coin cell and or take the button/coin cell apart.** The button/coin cell may leak, explode, catch fire and cause personal injury.
- ▸ **Do not allow damaged button/coin cells to come into contact with water.** Leaking lithium may mix with water to create hydrogen, which could cause a fire, an explosion, or personal injury.

NOTICE: This device complies with part 15 of the FCC Rules. Operation is subject to the following two conditions:

1. This device must not cause harmful interference, and
2. this device must accept any interference received, including interference that may cause undesired operation.

NOTICE: Changes or modifications made to this equipment not expressly approved by the Robert Bosch GmbH may void the FCC authorization to operate this equipment.

NOTE: This equipment has been tested and found to comply with the limits for a Class B digital device, pursuant to Part 15 of the FCC Rules. These limits are designed to provide reasonable protection against harmful interference in a residential installation. This equipment generates, uses and can radiate radio frequency energy and, if not installed and used in accordance with the instructions, may cause harmful interference to radio communications. However, there is no guarantee that interference will not occur in a particular installation. If this equipment does cause harmful interference to radio or television reception, which can be determined by turning the equipment off and on, the user is encouraged to try to correct the interference by one or more of the following measures:

- Reorient or relocate the receiving antenna.
- Increase the separation between the equipment and receiver.
- Connect the equipment into an outlet on a circuit different from that to which the receiver is connected.
- Consult the dealer or an experienced radio/TV technician for help.

Radiofrequency radiation exposure Information:
The radiated output power of the device is far below the FCC radio frequency exposure limits. Nevertheless, the device shall be used in such a manner that the potential for human contact during normal operation is minimized.

This equipment complies with FCC radiation exposure limits set forth for an uncontrolled environment. This transmitter must not be co-located or operating in conjunction with any other antenna or transmitter.

ISED Notice (Canada)

This device contains licence-exempt transmitter(s)/ receiver(s) that comply with Innovation, Science and Economic Development Canada's licence-exempt RSS(s). Operation is subject to the following two conditions:

1. this device may not cause interference, and
2. this device must accept any interference, including interference that may cause undesired operation of the device.

This equipment complies with Canada radiation exposure limits set forth for an uncontrolled environment. This transmitter must not be co-located or operating in conjunction with any other antenna or transmitter.

Certification information: For FCC- and IC-ID press and hold *Bluetooth*® button until **<Certifications>** appears on the display. Release *Bluetooth*® button and FCC-ID appears. Another short press of *Bluetooth*® button shows IC-ID.

FCC ID:	2AWRC-BHU3200
IC:	26294-BHU3200

Privacy notice

When connecting the eBike to the **Bosch Diagnostic-Tool 3** or when exchanging eBike components, technical information about your eBike (e.g. manufacturer, model, bike ID, configuration data) as well as regarding the use of the eBike (e.g. total travel time, energy consumption, temperature) is transmitted to Bosch eBike Systems (Robert Bosch GmbH) for processing your request, in service cases and for the purposes of product improvement. More information on data processing can be found at www.bosch-ebike.com/privacy-full.

Note: To improve readability, some values are displayed without decimal places. These values have been rounded up or down.

Product Description and Specifications

Product Features Intuvia 100



(1) *Bluetooth*® button
(2) Battery compartment cover
(3) Locking screw support
(4) On-board computer contact
(5) Reset button
(6) Locking screw for on-board computer
(7) Holder for on-board computer
(8) On-board computer cradle
(9) On-board computer
(10) Battery compartment
(11) Holder fastening screw
(12) Slotted screwdriver[a)]
(13) Non-rechargeable battery (coin cell type CR2450)
(14) Rubber seal

a) Not included in the scope of delivery

Display Elements of On-Board Computer

- **(a)** Charge indicator of the eBike battery
- **(b)** Bike light indicator
- **(c)** Riding mode indicator
- **(d)** Drive unit assistance indicator
- **(e)** Unit indicator
- **(f)** Text indicator
- **(g)** Navigation bar
- **(h)** Value indicator
- **(i)** Speedometer

Intended Use

The **Intuvia 100** on-board computer is designed to display cycling data on an eBike from the system generation **the smart system**.

So as to be able to use the full functionality of the eBike and the **Intuvia 100** on-board computer, a compatible smartphone with the **eBike Flow** app is required.



Depending on the operating system of the smartphone, the **eBike Flow** app can be downloaded free of charge from the Apple App Store or Google Play Store.

Scan the code with your smartphone to download the **eBike Flow** app.

Technical Data

On-board computer		Intuvia 100
Product code		BHU3200
Operating temperature[A)]	°F	23 to 104
Batteries		3 V, 1 × CR2450
Storage temperature	°F	50 to 104
Protection rating		IP55
Weight, approx.	lb	0.14
Bluetooth® Low Energy 5.0		
– Frequency	MHz	2400–2480
– Transmission power	mW	≤ 1

A) Temperatures outside of this range may cause faults in the display.

The license information for the product is available at the following Internet address: www.bosch-ebike.com/licences

Assembly

Inserting and Removing the On-Board Computer

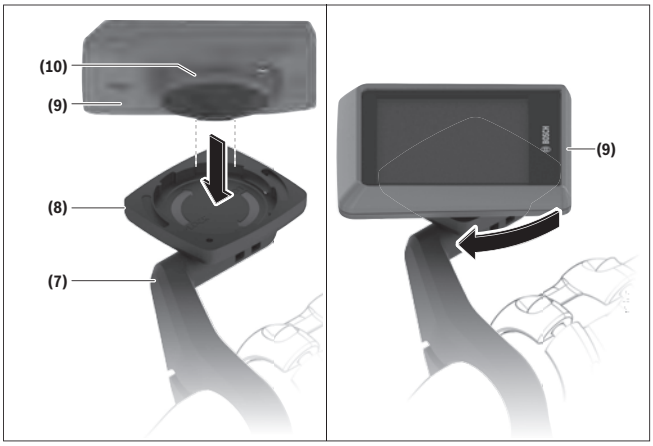

To **insert** the **(9)** on-board computer, insert the lugs of the battery compartment **(10)** into the cradle **(8)** of the holder, and gently press down on the on-board computer. To lock, turn the on-board computer clockwise until it engages.

To **remove** the on-board computer **(9)**, turn it counterclockwise and remove the on-board computer from the cradle **(8)**.

- ▸ **When you park up the eBike, remove the on-board computer.**

Inserting the Locking Screw

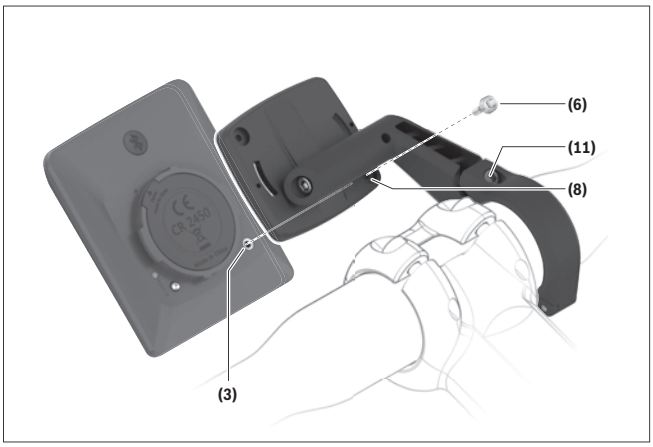

The on-board computer can be secured in place to prevent it from being removed from the holder. The on-board computer must be in the holder for this.

Undo the fastening screw **(11)** of the clamp with a hex key until the holder **(7)** can be moved. Turn the holder **(7)** until the bottom side of the on-board computer is accessible. Insert the locking screw **(6)** and bolt it with the on-board computer. Align the holder **(7)** correctly with the on-board computer and tighten the fastening screw **(11)** again with a hex key.

Note: The locking screw is not designed to prevent theft.

Operation

▸ **Prior to initial start-up, remove the protective film from the display to guarantee that the on-board computer is fully functional.** If the protective film remains on the display, this can impact the functionality/performance of the on-board computer.

Connection of the on-board computer to the eBike (pairing)

Your on-board computer is generally already connected with the eBike. If this is not the case, proceed as follows:

– Install the **eBike Flow** app.
– Activate *Bluetooth*® on your smartphone and open the **eBike Flow** app.
– In the **eBike Flow** app, select **<Settings>** → **<My eBike>** → **<eBike pass>** → **<Components>** → **<Add new device>**. Then select **<Intuvia 100>**.
– Briefly press the *Bluetooth*® **(1)** button, until **<Pairing Mode?>** is shown on the display.
– The device identification is shown on the on-board computer.
– Select the required device with the same identification in the **eBike Flow** app.

You can find further information at the following link: www.bosch-ebike.com/help-center.

The on-board computer can be updated using the **Intuvia 100 Update** app.

In the **eBike Flow** app under **<My eBike>** → **<eBike pass>** → **<Components>** → **<Intuvia 100>**, you can see which on-board computer software version is currently being used. In the same menu item, you can find the link to the **Intuvia 100 Update** app.

Depending on the smartphone's operating system, the **Intuvia 100 Update** app can be downloaded free of charge from the Apple App Store or from the Google Play Store.

Scan the code with your smartphone for further information about the **Intuvia 100 Update** app, and to access the link to the Apple App Store or Google Play Store.

Switching the On-board computer On/Off

Switch on the eBike.

To **switch on** the on-board computer, it must first be inserted in the holder. The on-board computer contact **(4)** is automatically pressed.

Switch on the operating unit and slowly move the eBike.

The following options are available for **switching off** the on-board computer:

– Press the on/off button on the operating unit to switch off the eBike.
  The on-board computer is also switched off.
– Remove the on-board computer from its holder.
  The on-board computer switches off automatically after 60 s.

Power supply of the On-board Computer

The on-board computer is provided with energy by the CR2450 button/coin cell.

Changing the coin cell

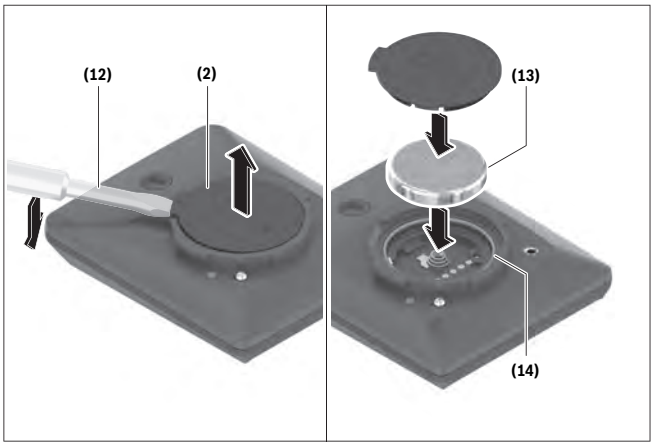

If the coin cell of the on-board computer is almost empty, you will be shown a corresponding message on the on-board computer. Open the battery compartment cover **(2)** with a slotted screwdriver **(12)**, remove the used coin cell and insert a new coin cell of

type CR2450. You can obtain the coin cells recommended by Bosch from your bicycle retailer.

When inserting the coin cell, ensure that the coin cell is inserted with the label facing upward and that the rubber seal **(14)** is positioned correctly.

Seal the battery compartment and slide the on-board computer onto the holder.

Battery charge indicator of the eBike battery

The on-board computer shows the state of charge of the eBike battery in percent. A notification is displayed once when the state of charge falls below 30 %, and again when it falls below 10 %. The notification can be acknowledged, otherwise it goes away automatically after 5 s.

Operation

The *Bluetooth*® button **(1)** has various functions. If the on-board computer was connected with an operating unit and has been removed from the holder, the displays can be switched within 60 s. To do so, briefly press the *Bluetooth*® button **(1)**. The on-board computer is then placed into stand-by mode.

Note: If you are not going to be using your eBike for several months, remove the on-board computer from its holder and set the on-board computer to storage mode. To do this, press the *Bluetooth*® button **(1)** until **<Storage Mode?>** appears.

To deactivate storage mode, switch the eBike on and press the *Bluetooth*® **(1)** button for 3 seconds. The display shows confirmation that the eBike is connected to the on-board computer.

The reset button **(5)** serves to reset the on-board computer to factory settings and delete all connections.

The on-board computer can be operated via one of the operating units shown. The functions of the buttons on the operating units are explained in the following overview.

Depending on how long it is pressed for, the select button has 2 functions.

5-button operating unit

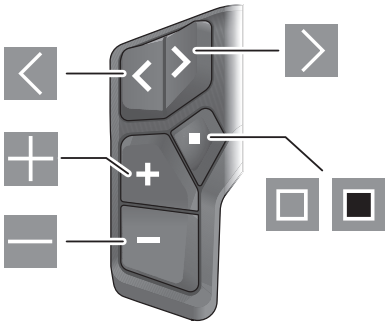

- Scroll to the left
- Scroll to the right
- Increase assistance level
- Decrease assistance level
- Select button (press briefly)
- Select button/open menu (press and hold > 1 s)

3-button operating unit

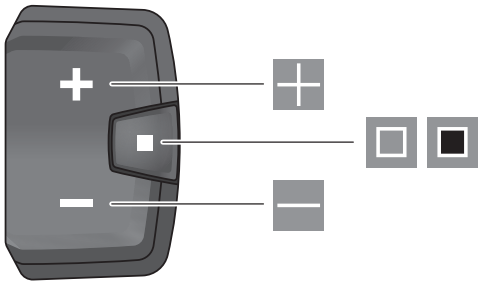

- Increase assistance level
- Decrease assistance level
- Select button/scroll through the screens (press briefly)
- Select button/open menu (press and hold > 1 s)

Note: All screenshots showing the display and text on the following pages are from the approved software version. The display, text and/or functions may change following a software update.

Note: Depending on the lighting conditions, there is background lighting that is only activated by pressing a button. The lighting duration can be adjusted.

Displays and settings of the on-board computer

Speed and distance indicators

The speedometer always displays the current speed.

You can choose from the following functions in the function display (combination of text indicator and value indicator):

- **<Distance>**: Distance traveled since the last reset
- **<Riding time>**: Journey time since the last reset
- **<Time>**: Current time
- **<Range>**: Estimated range of the eBike's available battery charge (at constant conditions such as riding mode, route profile, etc.)
- **<Avg. Speed>**: Average speed achieved since the last reset
- **<Max. Speed>**: Maximum speed achieved since the last reset
- **<Total distance>**: Total distance traveled with the eBike (cannot be reset)

Note: The on-board computer automatically displays a gear change recommendation when riding the eBike. The display of the gear change recommendation is superimposed over the text display **(f)** of the on-board computer, and can be deactivated manually via the basic settings.

Switching in the Function Indicator



Press the ◁ or ▷ button until the required function is displayed.



Press the ▣ select button repeatedly until the required function is displayed.

Certain settings cannot be applied on the on-board computer, but only in the **eBike Flow** app, e.g.:

- **<Wheel circumference>**
- **<Reset range calculation>**
- **<Auto trip reset>**

In addition, you receive an overview of the operating hours and the installed components in the **eBike Flow** app.

Displaying/Adjusting Basic Settings

Note: The settings menu cannot be called up while riding.

To get to the basic settings menu, press the ▣ select button on the operating unit repeatedly until **<Settings>** appears in the text display.

Switching/Leaving Basic Settings



Press the ◁ or ▷ button repeatedly until the required basic setting is displayed.



Press the ▣ select button repeatedly until the required basic setting is displayed.

Note: The changed setting is automatically saved upon leaving the respective basic setting.

Changing Basic Settings



To scroll down, briefly press the ▣ select button until the required value is displayed.



To scroll down, press the ▣ select button > 1 s until the required value is displayed.

Note: Pressing and holding the relevant button switches automatically to the next value in the basic settings.

You can choose between the following basic settings:

- **<Trip reset?>**: All data on the journey so far is reset to zero.
- **<Language>**: Here you can select a preferred language from the following options:
  English, German, French, Dutch, Italian, Spanish, Portuguese, Danish, Swedish, Norwegian, Polish, Czech, Japanese, Traditional Chinese for Taiwan, Korean.
- **<Units>**: Displays the speed and distance in either kilometers or miles.
- **<Time>**: You can set the time here.
- **<Time format>**: Displays the time in 12-hour or 24-hour format.

- **<Shift recom.>**: You can switch on/off the display of gear change recommendations.
- **<Backlight.>**: You can set the duration of the background lighting here.
- **<Brightness>**: The brightness can be adjusted to various levels.
- **<Reset settings?>**: You can reset the settings by pressing and holding the select button here.
- **<Back>**: You can leave the settings menu with this function.

Leaving the Basic Settings Menu

You leave the basic settings menu automatically if you are inactive for 60 s or start riding the eBike, or by using the **<Back>** function.



Briefly press the ▣ select button to leave the basic settings menu using the **<Back>** function.



Press the ▣ select button > 1 s to leave the basic settings menu using the **<Back>** function.

Maintenance and Service

Maintenance and cleaning

Do not clean any of the components with pressurized water.

Keep the display of your on-board computer clean.

Clean your on-board computer using a soft cloth dampened only with water. Do not use cleaning products of any kind.

Note: The **Intuvia 100** on-board computer may fog up under certain temperature and humidity conditions. This is not an error. Put the on-board computer in a heated room and leave it to dry.

Have your eBike checked by an expert at least once a year (including mechanical parts, up-to-dateness of system software).

In addition, the bicycle dealer may enter the service date based on the distance traveled and/or on a period of time. In this case, the on-board computer displays a message telling you when the service date is due each time it is switched on.

Please have your eBike serviced and repaired by an authorized bicycle dealer.

- ▸ **Only have repairs performed by a certified bicycle dealer.**

Note: If you are handing in your eBike to a bicycle dealer for maintenance, it is recommended that you deactivate **<Lock & Alarm>**.

After-sales service and advice on using products

If you have any questions about the eBike and its components, contact an authorized bicycle retailer.

For contact details of authorized bike dealerships, please visit www.bosch-ebike.com.

More information about the eBike components and their functions can be found in the Bosch eBike Help Center.

Transport

- ▸ **If you transport your eBike attached to the outside of your car, e.g. on a bike rack, remove the on-board computer and the eBike battery (except fixed mount battery) to avoid damaging them.**

Battery Recycling Program

The drive unit, on-board computer incl. operating unit, eBike battery, speed sensor, accessories and packaging should be disposed of in an environmentally correct manner.

Do not dispose of eBikes and their components with household waste.

You may recycle your Bosch battery pack by calling 1.800.822.8837.

Robert Bosch GmbH
72757 Reutlingen
Germany

www.bosch-ebike.com

0 275 U07 3BI (2024.03) T / 49

Owner’s Manual
Purion 200

BRC3800



en Original operating instructions

This manual contains important safety, performance and service information. Read and understand it along with the information provided to you by your bicycle manufacturer before using the product, and keep it for reference.

Table of contents

Introduction 2
About Warnings 2
General Warnings 2
Using your Manual 3
Operating your Bosch Drive System 4
Safety instructions 4
Product Description and Specifications 7
Operation 9
Establishing a smartphone connection 14
Troubleshooting 16
Maintenance and Service 17
Maintenance/cleaning 17
After-sales service and advice on using products 17
Battery Recycling Program 17

Introduction

About Warnings

This manual contains many **DANGER**, **WARNING**, and **CAUTION** indicators concerning the consequences of failure to use, assemble, maintain, store, inspect and dispose of a Bosch-equipped eBike in a safe manner.

– The combination of the safety alert symbol and the word **DANGER** indicates a hazardous situation that, if not avoided, will result in death or serious injury.
– The combination of the safety alert symbol and the word **WARNING** indicates a hazardous situation that, if not avoided, could result in death or serious injury.
– The combination of the safety alert symbol and the word **CAUTION** indicates a hazardous situation that, if not avoided, could result in minor or moderate injury.

General Warnings



Read all safety warnings and all instructions. Failure to follow the warnings and instructions may result in death or serious injury.

Save all safety warnings and instructions for future reference.

The term **eBike battery** used in these operating instructions refers to all original Bosch eBike batteries from the system generation **the smart system**.

▶ **Read ALL accompanying manuals before riding the bike for the first time.** Your Bosch Drive System comes with additional manuals and documents provided by the manufacturer of the bicycle and other components. Failure to read and understand safety information can result in death or serious injury.

⚠ WARNING

▶ **This manual contains important safety, performance and service information.** Read it before you take the first ride on your new bicycle, and keep it for reference. The manual can also be found online at www.bosch-ebike.com.

▶ **This manual is intended to be read together with the separate user manual provided with your bicycle.** Be sure to read all provided documents including labels on the product before your first ride.

▶ **Take responsibility for your own SAFETY.** If you have any questions or do not understand something, consult with your dealer or the bicycle or component manufacturer.

▶ **Some eBike accessories may present a choking hazard to small children.** Keep these accessories away from children.

⚠ CAUTION

▶ **The Bosch Drive System adds weight to your bicycle which you may not be used to lift.** Avoid injury, use proper lifting techniques.

Using your Manual

In addition to the functions outlined here, changes to software relating to troubleshooting and functional modifications may be introduced at any time.

Graphics

The bicycle shown in this manual may differ slightly from your bicycle, but will be similar enough to help you understand our instructions.

RIGHT-HAND and LEFT-HAND sides are determined by facing in the direction the bicycle will travel when going forward. When you see a broken line (------), the item referred to is hidden from view.

Operating your Bosch Drive System

Safety instructions



Read all the safety and general instructions. Failure to follow the warnings and instructions may result in electric shock, fire and/or serious injury.

Save all safety warnings and instructions for future reference.

The term **eBike battery** used in these operating instructions refers to all original Bosch eBike batteries from the system generation **the smart system**.

The terms **drive** and **drive unit** used in these operating instructions refer to all original Bosch drive units from the system generation **the smart system**.

- ▸ **Read and observe the safety warnings and instructions in all operating instructions of the eBike components and your eBike.**
- ▸ **Do not attempt to fix display or remote control while riding!**
- ▸ **Do not allow yourself to be distracted by the operating unit's display, particularly by text overlays shown according to the situation.** The display of riding information does not absolve the rider of the need to exercise due caution. If you do not focus exclusively on the traffic, you risk being involved in an accident. If you want to change settings on your operating unit, beyond just changing the riding mode, stop cycling to do so.
- ▸ **Set the display brightness such that you can adequately see important information like speed or warning symbols.** An incorrectly set display brightness can result in dangerous situations.
- ▸ **Do not use the control unit as a handle.** If you lift up the eBike by the control unit, you may cause irreparable damage to the control unit.
- ▸ **The push assistance function must only be used when pushing the eBike.** There is a risk of injury if the wheels of the eBike are not in contact with the ground while using the push assistance.
- ▸ **When the push assistance is activated, the pedals may turn at the same time.** When the push assistance function is activated, make sure that there is enough space between your legs and the turning pedals to avoid the risk of injury.
- ▸ **When using the push assistance, ensure that you can always control the eBike and hold it securely.** The push assistance can be suspended under certain conditions (e.g. obstacle on the pedal or accidentally slipping off the button of the operating unit). The eBike can suddenly move backwards towards you or start to tip. This poses a particular risk for the user if there is an additional load. When using the push assistance on the eBike, do not place the eBike in situations in which you cannot hold the eBike by yourself.
- ▸ **Do not activate push assistance function while riding on the bike.** Only use push assitance function when pushing the eBike.
- ▸ **Do not stand your eBike upside down on its handlebars and saddle if the operating unit or its holder protrude from the handlebars.** This may irreparably damage the operating unit or the holder.
- ▸ **Do not connect a charger to the eBike battery if the display of the operating unit or the on-board computer indicates that a critical error has occurred.** This may result in damage to your eBike battery. The eBike battery may catch fire, thereby resulting in serious burns and other injuries.
- ▸ **The control unit features a wireless interface. Local operating restrictions, e.g. in airplanes or hospitals, must be adhered to.**
- ▸ **Caution!** When using the operating unit with *Bluetooth*®, this may cause interference that affects other devices and systems, airplanes and medical devices (e.g. pacemakers, hearing aids). Similarly, the possibility that this may cause damage to hu-

mans and animals in the immediate vicinity cannot be completely excluded. Do not use the operating unit with *Bluetooth*® in the vicinity of medical devices, gas stations, chemical plants, areas with a potentially explosive atmosphere or on blast sites. Do not use the operating unit with *Bluetooth*® in airplanes. Avoid using the device in close proximity to your body over an extended period of time.

- The *Bluetooth*® wordmark and its logos are the registered trademarks and property of Bluetooth SIG, Inc. Any use of this wordmark/these logos by Robert Bosch GmbH, Bosch eBike Systems is under license.
- **Accessing other apps, reading pop up messages/other content, or otherwise using your mobile device while operating an eBike may be distracting. Distracted driving is a serious safety concern and can lead to accidents causing serious injury or death. In order to prevent distracted driving, most mobile devices come equipped with a "Do Not Disturb" mode. The "Do Not Disturb" mode should be used while operating an eBike.** Please consult your device-specific instructions for more information. You, as the eBike operator, are fully responsible for ensuring that you pay attention to road conditions and comply with traffic laws at all times.
- **Do not enter information or make selections while riding.** Interacting with the display or remote control while riding can lead to accidents causing serious injury or death. You must observe road and traffic conditions, and comply with traffic laws at all times.
- Please note that certain State or local laws may require that class III eBikes must be equipped with a functioning speedometer that displays speed in miles per hour. Riders must be aware of any and all applicable rules and regulations related to the operation or use of class III eBikes in any applicable jurisdictions before operating or otherwise using this product.
- **Observe all national regulations which set out the approved use of eBikes.**

Safety warnings for charging the battery inside the remote control

- **Only charge the remote control with USB power source (5 V, 600 mA max) and USB cable rated at least 600 mA.** Using USB power source or USB cable not appropriately rated for the application may result in fire, explosion or personal injury.
- **Charge the remote control in temperatures above +32 degrees F (0 degrees C) and below +104 degrees F (40 degrees C). Store remote control in locations where temperatures will not exceed 104 degrees F (40 degrees C).** This is important to prevent serious damage to the battery in the remote control.
- **Do not expose remote control to fire or excessive temperature.** Exposure to fire or temperature above 212 °F (100 °C) may cause explosion.
- **Do not recharge the remote control (via USB port) in damp or wet environment.** Water entering remote control may result in electric shock or fire.
- **Never submerge remote control in fluid of any kind or allow fluid to enter them.** Corrosive or conductive fluid (such as seawater or industrial chemical or bleach containing products, etc.) can cause short circuit which may result in fire, personal injury and property damage.
- **Battery leakage may occur under extreme usage or temperature conditions. Avoid contact with skin and eyes.** The battery liquid is caustic and could cause chemical burns to tissues. If liquid comes in contact with skin, wash quickly with soap and water. If the liquid contacts your eyes, immediately flush eyes with water for a minimum of 15 minutes and seek medical attention.
- **Before each use, check the remote control, cable and plug.** If damage is detected, do not use the remote control. Damaged remote control, charging

cables and plugs increase the risk of a fire, explosion and personal injury.

- ▶ **Do not disassemble remote control.** No user serviceable part inside. Incorrect reassembly or damage may result in fire or explosion.

NOTICE: This device complies with part 15 of the FCC Rules. Operation is subject to the following two conditions:

1. This device must not cause harmful interference, and
2. this device must accept any interference received, including interference that may cause undesired operation.

NOTICE: Changes or modifications made to this equipment not expressly approved by the Robert Bosch GmbH may void the FCC authorization to operate this equipment.

NOTE: This equipment has been tested and found to comply with the limits for a Class B digital device, pursuant to Part 15 of the FCC Rules. These limits are designed to provide reasonable protection against harmful interference in a residential installation. This equipment generates, uses and can radiate radio frequency energy and, if not installed and used in accordance with the instructions, may cause harmful interference to radio communications. However, there is no guarantee that interference will not occur in a particular installation. If this equipment does cause harmful interference to radio or television reception, which can be determined by turning the equipment off and on, the user is encouraged to try to correct the interference by one or more of the following measures:

- Reorient or relocate the receiving antenna.
- Increase the separation between the equipment and receiver.
- Connect the equipment into an outlet on a circuit different from that to which the receiver is connected.
- Consult the dealer or an experienced radio/TV technician for help.

Radiofrequency radiation exposure Information:
The radiated output power of the device is far below the FCC radio frequency exposure limits. Nevertheless, the device shall be used in such a manner that the potential for human contact during normal operation is minimized.

This equipment complies with FCC radiation exposure limits set forth for an uncontrolled environment. This transmitter must not be co-located or operating in conjunction with any other antenna or transmitter.

ISED Notice (Canada)

This device contains licence-exempt transmitter(s)/ receiver(s) that comply with Innovation, Science and Economic Development Canada's licence-exempt RSS(s). Operation is subject to the following two conditions:

1. this device may not cause interference, and
2. this device must accept any interference, including interference that may cause undesired operation of the device.

This equipment complies with Canada radiation exposure limits set forth for an uncontrolled environment. This transmitter must not be co-located or operating in conjunction with any other antenna or transmitter.

Privacy notice

When connecting the eBike to the **Bosch Diagnostic-Tool 3** or when exchanging eBike components, technical information about your eBike (e.g. manufacturer, model, bike ID, configuration data) as well as regarding the use of the eBike (e.g. total travel time, energy consumption, temperature) is transmitted to Bosch eBike Systems (Robert Bosch GmbH) for processing your request, in service cases and for the purposes of product improvement. More information on data processing can be found at www.bosch-ebike.com/privacy-full.

Note: To improve readability, some values are displayed without decimal places. These values have been rounded up or down.

Product Description and Specifications

Product Features

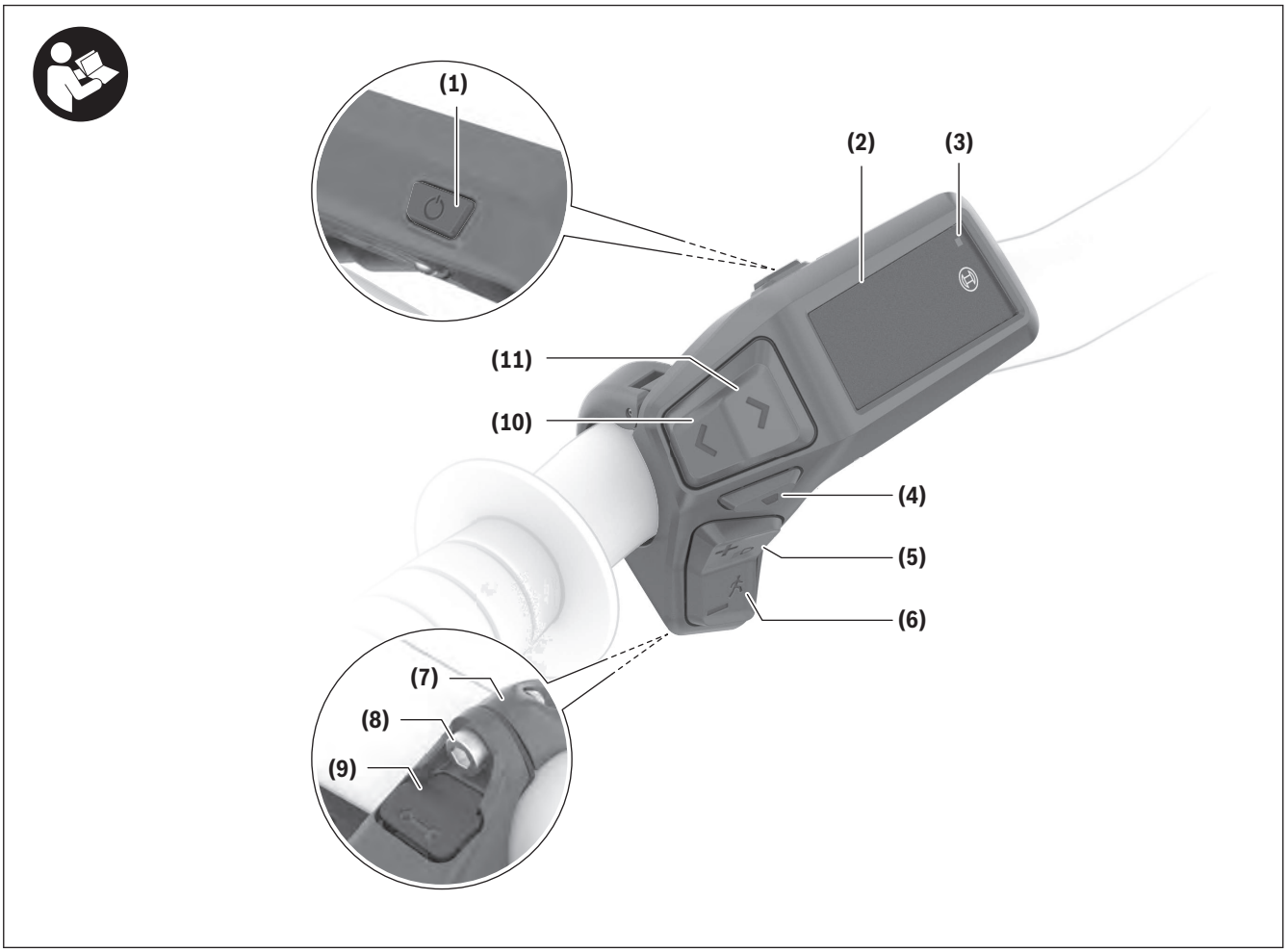

All illustrations of bike parts except for the drive unit, on-board computer including operating unit, speed sensor and the corresponding holders are schematic and may differ on your eBike.

(1) On/off button
(2) Display
(3) Ambient light sensor
(4) Select button
(5) Button for increasing the assistance level **+**/ bicycle lights
(6) Button for reducing the assistance level **–**/ walk assistance
(7) Holder
(8) Fastening screw
(9) Diagnostics connection (for servicing purposes only)
(10) Scroll to the left button
(11) Scroll to the right button

Intended Use

The **Purion 200** operating unit is designed for controlling an eBike and, as an option, for controlling an additional on-board computer from the system generation **the smart system**. If you use your smartphone as an on-board computer, you can use the **Purion 200** operating unit to also control the **eBike Flow** app.

In order to be able to use the control unit to its fullest extent, a compatible smartphone with the **eBike Flow** app is required.

You can connect the **Purion 200** operating unit with your smartphone via *Bluetooth*®.

Depending on the operating system of the smartphone, the **eBike Flow** app can be downloaded free of charge from the Apple App Store or Google Play Store.

Scan the code with your smartphone to download the **eBike Flow** app.

Technical Data

Control unit		Purion 200
Product code		BRC3800
Max. charging current of USB port[A)]	mA	600
USB port charging voltage[A)]	V	5
USB charging cable[B)]		USB Type-C® [C)]
Charging temperature	°F	32 to 104
Operating temperature	°F	23 to 104
Storage temperature	°F	50 to 104
Diagnostic interface		USB Type-C® [C)]
Internal lithium-ion battery	V mAh	3.7 75
Protection rating		IP55
Dimensions (without fastening)	in	3.3 × 2.1 × 2.4
Weight	lb	0.11
Bluetooth® Low Energy 5.0		
– Frequency	MHz	2400–2480
– Transmission power	mW	1

A) Information for charging the **Purion 200** operating unit; external devices cannot be charged.

B) Not included with the product as standard

C) USB Type-C® and USB-C® are trademarks of USB Implementers Forum.

The license information for the product is available at the following Internet address: www.bosch-ebike.com/licences

Certification information

FCC and IC ID (e-labels) can be found in the status screen under **<Settings>** → **<Information>** → **<Certificates>**. Scroll through all e-labels by briefly pressing the scroll on button **(11)**.

FCC ID: 2AWRC-BRC3800
IC: 26294-BRC3800

Note: If you wish to access information from the e-label of **Purion 200**, you may first have to remove any additional on-board computer or, if using a smartphone, close the ride screen in the **eBike Flow** app.

Operation

Requirements

The eBike can then only be switched on when the following requirements are met:

- A sufficiently charged eBike battery is inserted (see operating instructions for the eBike battery from the system generation **the smart system**).
- The speed sensor is connected properly (see operating instructions for the drive unit from the system generation **the smart system**).

Before initial commissioning

- ▸ **Prior to initial start-up, remove the protective film from the display to guarantee that the on-board computer is fully functional.** If the protective film remains on the display, this can impact the functionality/performance of the on-board computer.

Before setting off, make sure that you can easily reach the buttons on the operating unit. It is recommended to align the plus/minus buttons level so that it is almost perpendicular to the ground.

To **align** the **Purion 200** operating unit, gently loosen the fastening screw **(8)** of the holder **(7)** until it can be turned on the handlebars. Align the operating unit and carefully retighten the fastening screw **(8)**.

Control unit power supply

If a sufficiently charged eBike battery is inserted into the eBike and the eBike is switched on, the internal battery of the operating unit is powered and charged.

If the state of charge of the internal battery of the operating unit is very low, you can charge it via the diagnostics connection **(9)** with a USB Type-C® cable using a power bank or another suitable power source (charging voltage **5 V**; charging current max. **600 mA**).

Always close the flap of the diagnostics connection **(9)** so that no dust or moisture can enter.

Switching the eBike on/off

To **switch on** the eBike, briefly press the on/off button **(1)**. The eBike is ready to ride once the start-up animation is complete.

The display brightness is controlled by the ambient light sensor **(3)**. Therefore, do not cover the ambient light sensor **(3)**.

The drive is activated as soon as you start pedaling (except in the **OFF** riding mode). The drive power varies depending on the riding mode set.

As soon as you stop pedaling when in normal operation, or as soon as you have reached a speed of **20/28 mph**, the drive switches off the assistance. The drive is automatically re-activated as soon you start pedaling again and the speed is below **20/28 mph**.

To **switch off** the eBike, press the on/off button **(1)** briefly (< 3 s).

If no power is requested from the drive for approx. **10** minutes (e.g. due to the eBike being stationary) and no button is pressed, the eBike switches off automatically.

Operation

The functions of the buttons on the **Purion 200** operating unit can be found in the following overview.

Depending on how long it is pressed for, the select button has 2 functions.

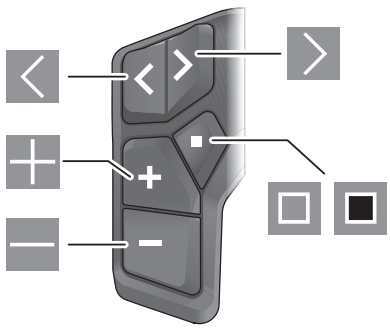

- Scroll to the left
- Scroll to the right
- Increase assistance level/scroll up

- Reduce assistance level/scroll down
- Open the select button/settings menu on the status page (press briefly)
- Open the quick menu (from any page except for the status page) (press for > 1 s)

Note: The fault codes can be acknowledged using the button.

Note: All screenshots showing the display and text are from the approved software version. The display, text and/or functions may change following a software update.

Status page

From the start page, you can access the status page via the button.

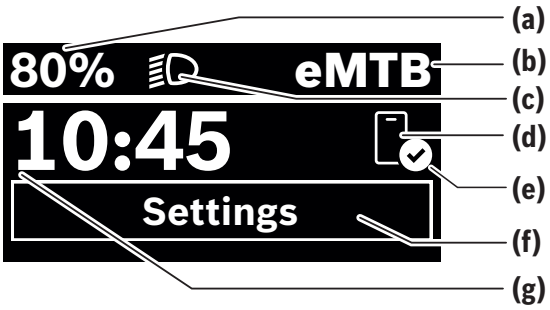

(a) State of charge of eBike battery (can be configured)
(b) Riding mode
(c) Bicycle lights
(d) Smartphone connection
(e) Connection status
(f) Settings menu
(g) Time

Accessing the Settings Menu

You can access the settings menu from this page. Press the button to call up the settings menu.

Note: The settings menu cannot be accessed while riding.

The **<Settings>** settings menu contains the following menu items:

– **<My eBike>**
You can find the following menu items here.
  - **<Range reset>**
  The value for the range can be reset here.
  - **<Auto trip reset>**
  The trip meter reset time can be set here.
  - **<Wheel circumf.>**
  The value of the rear wheel circumference can be adjusted or reset to the standard setting here.
  - **<Service>**
  The next service date is shown here, provided that it has been set by the bicycle dealer.
  - **<Components>**
  The components used with their version numbers are displayed here.

– **<App connect>**
The connection status of the **eBike Flow** app is displayed here.

– **<My Purion>**
You can find the following menu items here.
  - **<Statusbar>**
  You can choose between the **<Battery>**, **<Time>** or **<Speed>** displays here.
  Note: This function is not available for eBikes with a support level up to **28 mph**.
  - **<Shift recom.>**
  You can activate or deactivate the gear change recommendation here.
  - **<Trip summary>**
  You can activate or deactivate the summary of all ride information when switching off here.
  - **<Trick Check>**
  You can switch the trick check on and off here.
  - **<Time>**
  You can set the time here.
  - **<Time format>**
  You can select one of the two time formats (12 h/24 h) here.
  - **<Brightness>**
  You can set the on-board computer brightness here.

- **<Language>**
  Here you can select a preferred language from the following languages:
  English, German, French, Dutch, Italian, Spanish, Portuguese, Swedish, Danish, Polish, Norwegian, Czech, Traditional Chinese for Taiwan, Korean, Japanese.
- **<Units>**
  You can choose between metric or imperial units here.
- **<Settings reset>**
  You can reset all of the system settings to the default values here.

– **<Information>**
  You can find the following menu items here:
- **<Contact>**
  You can find contact details for Bosch eBike Systems here.
- **<Certificates>**
  You can find certificates and eLabels here.

Leaving the Settings Menu

Briefly press the ▣ button to save the settings and leave the settings menu.

Press and hold the ▣ or ◁ button for more than one second to leave the settings menu without saving the settings.

Quick menu

Selected settings are displayed on the quick menu. These settings can also be changed while riding.

You can access the quick menu by pressing and holding (> 1 s) the select button ▣.

It cannot be accessed from the status page.

The following settings can be changed via the quick menu:

– **<Ride>**
  All data on the journey so far is reset to zero.
– **<eShift>** (optional)
  The settings vary depending on the gearing in question. For example, you can set your cadence here, provided that the gearing supports this function.
– **<Navigation>** (optional)
  You can select your recent destinations as a new destination and/or end the running navigation.

Note: Depending on the configuration of your eBike, additional functions may be available.

Start page

If you did not select another page before the last time you switched off, you will be shown this page.



(a) State of charge of eBike battery (can be configured)
(b) Riding mode
(h) Unit of speed indicator
(i) Your performance
(j) Speed
(k) Drive power

You can view other screens by pressing the ◁ or ▷ buttons.

The following additional screens are available for you to view:

– Status screen: The status of the connected devices is shown here.
– Distances screen
– Rides screen
– Range screen
– eBike battery screen
– Power screen
– Cadence screen
– Total distances screen
– ABS screen (optional)

Selecting the Riding Mode

You can set how much the eBike drive assists you while pedaling on the operating unit using the increase assistance level **+ (5)** and reduce assistance level **– (6)** buttons. The riding mode can be changed even while cycling, and is displayed in color.

Riding mode	Notes
OFF	Drive assistance is switched off. The eBike can just be moved by pedaling, as with a normal bicycle.
ECO	Effective assistance with maximum efficiency, for maximum range
ECO+	Range-optimized riding mode that only switches on the drive assistance above a certain rider performance; for normal riding and for a maximum range
TOUR	Steady assistance, long range for touring
TOUR+	Dynamic assistance for normal riding and biking sports
eMTB	Optimal assistance whatever the terrain, rapid acceleration when starting from a standstill, improved dynamics and top performance
SPORT	Powerful assistance, for mountain biking and for cycling in urban traffic
TURBO	Maximum assistance even at a high cadence, for biking sports
AUTO	The assistance is dynamically adapted to the riding situation.
RACE	Maximum assistance on the eMTB racetrack; very direct response and maximum "Extended Boost" for the best possible performance in competitive situations
CARGO	Steady, powerful assistance for safely transporting heavy weights
SPRINT	Dynamic assistance according to cadence – for athletic eGravel and eRoad cycling with rapid sprints and frequent ascents

The designations and configuration of the riding modes can be preconfigured by the manufacturer and selected by the bicycle retailer.

Note: The available riding modes depend on the respective drive unit.

Adjusting the Riding Mode

The riding modes can be adapted within certain limits using the **eBike Flow** app. This gives you the option of adjusting your eBike to your personal requirements.

It is not possible to create a completely new riding mode. You can only adjust the riding modes that have been enabled by the manufacturer or dealer on your system. This may be fewer than four riding modes.

In addition, restrictions in your country may mean that it is not possible to adjust a particular riding mode.

The following parameters are available for making adjustments:

- Assistance in relation to the base value of the riding mode (within the legal requirements)
- Drive response
- Top limit speed (within the legal requirements)
- Maximum torque (within the limits of the drive)

Note: Please ensure that your modified riding mode retains the position, name and color on all on-board computers and controls.

Interaction of the drive unit with the gear-shifting

You should shift through gears on an eBike in the same manner as when using a normal bicycle (observe the operating instructions of your eBike with regard to this point).

Irrespective of the type of gear shifting, it is advisable that you briefly reduce the pressure on the pedals

when changing gear. This will aid gear shifting and reduce wear on the powertrain.

By selecting the correct gear, you can increase your speed and range while applying the same amount of force.

Therefore, follow the gear-shifting recommendations that are displayed to you on your on-board computer.

Switching bike lights on/off

Before starting each journey, check that your bike lights are working correctly.

To **switch on** the bicycle lights, press the bicycle lights button **(5)** for more than 1 s.

Switching the push assistance on/off

The push assistance aids you when pushing your eBike. The maximum speed of the push assistance is **2.5 mph**. The manufacturer's default setting can be lower and may need to be adjusted by the bicycle retailer.

- ▶ **The push assistance function must only be used when pushing the eBike.** There is a risk of injury if the wheels of the eBike are not in contact with the ground while using the push assistance.
- ▶ **If the selected gear is too high, the drive unit may not be able to move the eBike or activate the roll-away lock.**

To **start** walk assistance, press the walk assistance **(6)** button for more than 1 s, keep it pressed and follow the instructions on the display.

To **activate** walk assistance, one of the following actions must occur within the next 10 s:

- – Push the eBike forward.
- – Push the eBike backward.
- – Perform a sideways tilting movement with the eBike.

After activation, the drive begins to push and the indicator on the display changes.

If you release the walk assistance **(6)** button, walk assistance is stopped. You can reactivate walk assistance within 10 s by pressing the walk assistance **(6)** button.

If you do not reactivate walk assistance within 10 s, walk assistance automatically switches off.

Walk assistance is always ended if:

- – The rear wheel jams,
- – The bicycle cannot move over ridges,
- – A body part is blocking the bike crank,
- – An obstacle continues to turn the crank,
- – You start pedaling,
- – The increase assistance level **+**/bicycle lights **(5)** button or on/off button **(1)** is pressed.

Walk assistance has a roll-away lock, i.e. even after walk assistance has been used, rolling backwards is actively curbed by the drive for a few seconds, and you cannot push the eBike backwards or can only do so with difficulty.

The roll-away lock is immediately deactivated by pressing the increase assistance level **+**/bicycle lights **(5)** button.

The push assistance function is subject to local regulations; the way it works may therefore differ from the description above. It can also be deactivated.

ABS – Anti-lock braking system (optional)

If the eBike is fitted with a Bosch eBike ABS from the system generation **the smart system**, the ABS symbol lights up when the eBike system starts.

After moving off, the ABS internally checks its functionality and the ABS symbol goes off.

In the event of an error, the ABS symbol lights up and a message appears on the display. This means that the ABS is inactive. You can press the select button **(4)** to acknowledge the error and the ABS error message disappears. The ABS symbol appears in the statusbar to notify you that the ABS is still switched off.

For details on the ABS and how it works, please refer to the ABS operating instructions.

Establishing a smartphone connection

In order to be able to use the following eBike functions, a smartphone with the **eBike Flow** app is required.

Connection to the app occurs via a *Bluetooth*® connection.

Switch on the eBike and wait for the starting animation. Do not ride the eBike.

Begin *Bluetooth*® pairing by pressing and holding (> 3 s) the on/off button **(1)**. When the status of the pairing process is displayed, release the on/off button **(1)**.

Confirm the connection request in the app.

Activity tracking

In order to record activities, it is necessary to register and log into the **eBike Flow** app.

To record activities, you must consent to the storage of your location data in the app. Without this, your activities cannot be recorded in the app. For location data to be recorded, you must be logged in as the user.

eBike Lock

<eBike Lock> can be set up for each eBike via the **eBike Flow** app under **<Settings>** → **<My eBike>** → **<Lock & Alarm>**. In the process, a key for unlocking the eBike is saved on the smartphone and/or the **Kiox 300/Kiox 500** on-board computer.

The **<eBike Lock>** is automatically enabled in the following cases:

– The eBike is switched off via the operating unit
– The eBike is switched off automatically

If the eBike is switched on and the smartphone is connected to the eBike via *Bluetooth*®, or the pre-set on-board computer is fitted in the holder, the eBike will be unlocked.

<eBike Lock> is connected to your **user account**.

Should you lose your smartphone, you can log in via another smartphone using the **eBike Flow** app, and unlock your user account and the eBike.

If the on-board computer is lost, you can reset all digital keys in the **<Lock & Alarm>** menu item of the **eBike Flow** app.

Warning! If you select a setting in the app that leads to disadvantages for the **<eBike Lock>** (e.g. deletion of your eBike or user account), then you will first be shown warning messages. **Please read through these thoroughly and adhere to the warnings that are issued (e.g. before deleting your eBike or user account).**

Setting up <eBike Lock>

In order to be able to set up the **<eBike Lock>**, the following conditions must be fulfilled:

– The **eBike Flow** app has been installed.
– A user account has been created.
– No update is currently being carried out on the eBike.
– The eBike is connected to the smartphone via *Bluetooth*®.
– The eBike is stationary.
– The smartphone is connected to the Internet.
– The eBike battery is sufficiently charged, and the charging cable is not connected.

You can set up **<eBike Lock>** in the **eBike Flow** app under the **<Lock & Alarm>** menu item.

The eBike drive only provides support if, when the eBike is switched on, the smartphone is connected to the eBike via *Bluetooth*® or the on-board computer is fitted in the holder. If the smartphone is used as a key, your smartphone must have *Bluetooth*® switched on, and the **eBike Flow** app must be active in the background. If **<eBike Lock>** is activated, you can also use your eBike without support from the drive unit.

Compatibility

The **<eBike Lock>** is compatible with all Bosch drive units from the system generation **the smart system**.

How it works

In combination with the **<eBike Lock>**, the smartphone and the on-board computer work like a key for the drive unit. The **<eBike Lock>** is activated by switching off the eBike. When switching on, the eBike checks if any pre-set key is available. This is indicated by a padlock symbol on the **Purion 200** operating unit.

Note: The **<eBike Lock>** alone does not provide adequate theft protection; it is simply a supplement to a mechanical lock. The **<eBike Lock>** does not provide any form of mechanical lock for the eBike. Only the assistance from the drive unit is deactivated. The drive unit will be unlocked for as long as the smartphone is connected to the eBike via *Bluetooth*® or the on-board computer is placed in the holder.

If you want to give third parties temporary or permanent access to your eBike, share one of the preset digital keys (on-board computer/smartphone). As a result, the <eBike Lock> is still active. If you want to take your eBike to a service, the <eBike Lock> can be deactivated in the eBike Flow app in the menu item <Settings>. If you wish to sell your eBike, you will also need to delete the eBike from your user account in the **eBike Flow** app in the **<Settings>** menu item.

When the eBike is switched off, the drive unit will emit a "Lock" sound (i.e. an audio signal that is played **once**) to indicate that the assistance from the drive unit is switched off.

When the eBike is switched on, the drive unit will emit two "Unlock" sounds (i.e. an audio signal that is played **twice**) to indicate that the assistance from the drive unit is enabled again.

The "Lock" sound will help you determine whether or not the **<eBike Lock>** on your eBike is active. The audio signal is activated by default, but it can be deactivated in the **eBike Flow** app in the **<Locking sound>** menu item by selecting the lock symbol under your eBike.

Note: If you can no longer set up or switch off the **<eBike Lock>**, please contact your bicycle dealer.

Replacing eBike components and <eBike Lock>

Replacing the smartphone

1. Install the **eBike Flow** app on the new smartphone.
2. Log in using **the same** account with which you activated **<eBike Lock>**.
3. **<eBike Lock>** is displayed as set up in the **eBike Flow** app.

More information about this can be found in the **eBike Flow** app or in the Bosch eBike Help Center on the website www.bosch-ebike.com/help-center.

Software updates

Software updates must be started manually in the **eBike Flow** app.

Software updates are transferred from the app to the control unit in the background as soon as it is connected to the app. During the software update, keep watching the display on the control unit **Purion 200**. The eBike is then restarted.

You can control the software updates via the **eBike Flow** app.

Troubleshooting

The error messages are displayed in a pop-up on the **Purion 200** control unit.

The operating unit shows whether critical errors or less critical errors occur on the eBike.

The error messages generated by the eBike can be read via the **eBike Flow** app or by your bicycle retailer.

Via a link in the **eBike Flow** app, information about the error and support for rectifying the error can be displayed.

Less critical errors

Errors are acknowledged by pressing the select button **(4)**.

You can use the following table to rectify the errors yourself if necessary. Otherwise, please contact your bicycle retailer.

Number	Troubleshooting
523005 **514001** **514002** **514003** **514006**	The indicated error numbers show that there is interference when the sensors detect the magnetic field. See whether you have lost the magnet while riding. If you are using a magnet sensor, check that the sensor and magnet have been properly installed. Make sure too that the cable to the sensor is not damaged. If you are using a rim magnet, make sure that you do not have any magnetic field interference in the vicinity of the drive unit.
680007 **680009** **680012** **680014** **680016** **680017**	The indicated error numbers show that the eBike battery is outside of the permissible operating temperature. The charging of the eBike battery is interrupted. As soon as the operating temperature returns to the permissible range, the charging process will start again.

Critical errors

If a critical error occurs, follow the handling instructions on the following table.

Number	Handling instructions
6A0004	Remove the PowerMore battery and restart your eBike. If the problem persists, please contact your specialist retailer.
890000	– Acknowledge the error code. – Restart the eBike system. If the problem persists: – Acknowledge the error code. – Perform the software update. – Restart the eBike system. If the problem persists: – Please contact a Bosch eBike systems specialist retailer.

Maintenance and Service

Maintenance/cleaning

⚠ WARNING

- ▶ **Do not open any of the components. Service should only be carried out at an authorized Bosch eBike dealer.** Failure to follow above warning can cause death or serious injury. Refer to your bicycle manual or component manual for all non-Bosch drive system components.
- ▶ **Do not paint any components of the Bosch drive system as they may cause premature failure of the component.**
- ▶ **Do not submerge your eBike components in water, or wash with pressurized hose.** Your Bosch drive unit is designed to be water tight to rain water or non-pressure hose washing.

Do not clean any of the components with pressurized water.

Keep the display of your operating unit clean. Dirt can cause faulty brightness detection.

Clean your operating unit using a soft cloth dampened only with water. Do not use cleaning products of any kind.

Note: The **Purion 200** operating unit may fog up under certain temperature and humidity conditions. This is not an error. Put the eBike in a heated room.

Have your eBike checked by an expert at least once a year (including mechanical parts, up-to-dateness of system software).

In addition, the bicycle dealer may enter the service date based on the distance traveled and/or on a period of time. In this case, the operating unit displays a message telling you when the service date is due each time it is switched on.

Please have your eBike serviced and repaired by an authorized bicycle dealer.

- ▶ **Only have repairs performed by a certified bicycle dealer.**

Note: If you are handing in your eBike to a bicycle dealer for maintenance, it is recommended that you deactivate **<Lock & Alarm>**.

Note: If you do not use the **Purion 200** operating unit for a long time, charge it in accordance with (see "Control unit power supply", page English – 9).

After-sales service and advice on using products

If you have any questions about the eBike and its components, contact an authorized bicycle retailer.

For contact details of authorized bike dealerships, please visit www.bosch-ebike.com.

More information about the eBike components and their functions can be found in the Bosch eBike Help Center.

Battery Recycling Program

The drive unit, on-board computer incl. operating unit, eBike battery, speed sensor, accessories and packaging should be disposed of in an environmentally correct manner.

Do not dispose of eBikes and their components with household waste.

You may recycle your Bosch battery pack by calling 1.800.822.8837.

Robert Bosch GmbH
72757 Reutlingen
Germany

www.bosch-ebike.com

0 275 U07 3RP (2024.03) T / 60

Owner’s Manual
Purion 400



en Original operating instructions

This manual contains important safety, performance and service information. Read and understand it along with the information provided to you by your bicycle manufacturer before using the product, and keep it for reference.

Table of Contents

Introduction 2
About Warnings 2
General Warnings 2
Using your Manual 3
Operating your Bosch On-board Computer 4
Safety instructions 4
Product Description and Specifications 6
Assembly 8
Operation 10
Maintenance and Service 14
Maintenance and cleaning 14
After-sales service and advice on using products 14
Battery Recycling Program 14

Introduction

About Warnings

This manual contains many **DANGER**, **WARNING** and **CAUTION** indicators concerning the consequences of failure to use, assemble, maintain, store, inspect and dispose of a Bosch-equipped eBike in a safe manner.

– The combination of the safety alert symbol and the word **DANGER** indicates a hazardous situation that, if not avoided, will result in death or serious injury.
– The combination of the safety alert symbol and the word **WARNING** indicates a hazardous situation that, if not avoided, could result in death or serious injury.
– The combination of the safety alert symbol and the word **CAUTION** indicates a hazardous situation that, if not avoided, could result in minor or moderate injury.

General Warnings



Read all safety warnings and all instructions. Failure to follow the warnings and instructions may result in death or serious injury.

Save all safety warnings and instructions for future reference.

The term **eBike battery** used in these operating instructions refers to all original Bosch eBike batteries from the system generation **the smart system**.

▶ **Read ALL accompanying manuals before riding the bike for the first time.** Your Bosch Drive System comes with additional manuals and documents provided by the manufacturer of the bicycle and other components. Failure to read and understand safety information can result in death or serious injury.

⚠ WARNING

▶ **This manual contains important safety, performance and service information.** Read it before you take the first ride on your new bicycle, and keep it for reference. The manual can also be found online at www.bosch-ebike.com.

▶ **This manual is intended to be read together with the separate user manual provided with your bicycle.** Be sure to read all provided documents including labels on the product before your first ride.

▶ **Take responsibility for your own SAFETY.** If you have any questions or do not understand something, consult with your dealer or the bicycle or component manufacturer.

▶ **Some eBike accessories may present a choking hazard to small children.** Keep these accessories away from children.

⚠ CAUTION

▶ **The Bosch Drive System adds weight to your bicycle which you may not be used to lift.** Avoid injury, use proper lifting techniques.

Using your Manual

In addition to the functions outlined here, changes to software relating to troubleshooting and functional modifications may be introduced at any time.

Graphics

The bicycle shown in this manual may differ slightly from your bicycle, but will be similar enough to help you understand our instructions.

RIGHT-HAND and LEFT-HAND sides are determined by facing in the direction the bicycle will travel when going forward. When you see a broken line (------), the item referred to is hidden from view.

Operating your Bosch On-board Computer

Safety instructions



Read all the safety and general instructions. Failure to follow the warnings and instructions may result in electric shock, fire and/or serious injury.

Save all safety warnings and instructions for future reference.

The term **eBike battery** used in these operating instructions refers to all original Bosch eBike batteries from the system generation **the smart system**.

- ▸ **Read and observe the safety warnings and instructions in all operating instructions of the eBike components and your eBike.**
- ▸ **Do not attempt to attach the on-board computer or the operating unit while riding!**
- ▸ **Do not allow yourself to be distracted by the on-board computer's display, particularly by text overlays shown according to the situation.** The display of riding information does not absolve the rider of the need to exercise due caution. If you do not focus exclusively on the traffic, you risk being involved in an accident. If you want to make entries in your on-board computer other than switching the riding mode, stop cycling and enter the relevant details.
- ▸ **Do not operate your smartphone during the journey.** If you do not concentrate exclusively on the traffic around you, you risk being involved in an accident. When using your smartphone, only enter the relevant data once you've stopped.
- ▸ **Set the brightness of the on-board computer such that you can adequately see important information like speed or warning symbols.** An incorrectly set on-board computer brightness can result in dangerous situations.
- ▸ **Do not open the on-board computer.** Opening the on-board computer can result in irreparable damage and void your warranty.
- ▸ **Do not use the on-board computer as a handle.** Lifting the eBike up by the on-board computer can cause irreparable damage to the on-board computer.
- ▸ **Do not stand your eBike upside down on its saddle and handlebars if the on-board computer or its holder protrude from the handlebars.** This may irreparably damage the on-board computer or the holder. Also remove the on-board computer before placing the eBike on a wall mount to ensure that the on-board computer does not fall off or become damaged.
- ▸ **The on-board computer Purion 400 contains a buzzer. Loud signal tones may sound under certain circumstances. The loud sound can damage hearing.** Therefore, keep a sufficient distance from the on-board computer.
- ▸ **Do not enter information or make selections while riding.** Interacting with the display or remote control while riding can lead to accidents causing serious injury or death. You must observe road and traffic conditions, and comply with traffic laws at all times.
- ▸ **Accessing other apps, reading pop up messages/other content, or otherwise using your mobile device while operating an eBike may be distracting. Distracted driving is a serious safety concern and can lead to accidents causing serious injury or death. In order to prevent distracted driving, most mobile devices come equipped with a “Do Not Disturb” mode. The “Do Not Disturb” mode should be used while operating an eBike.** Please consult your device-specific instructions for more information. You, as the eBike operator, are fully responsible for ensuring that you pay attention to road conditions and comply with traffic laws at all times.

- ▶ **Do not activate push assistance function while riding on the bike.** Only use push assitance function when pushing the eBike.
- ▶ Please note that certain State or local laws may require that class III eBikes must be equipped with a functioning speedometer that displays speed in miles per hour. Riders must be aware of any and all applicable rules and regulations related to the operation or use of class III eBikes in any applicable jurisdictions before operating or otherwise using this product.

NOTICE: This device complies with part 15 of the FCC Rules. Operation is subject to the following two conditions:

1. This device must not cause harmful interference, and
2. this device must accept any interference received, including interference that may cause undesired operation.

NOTICE: Changes or modifications made to this equipment not expressly approved by the Robert Bosch GmbH may void the FCC authorization to operate this equipment.

NOTE: This equipment has been tested and found to comply with the limits for a Class B digital device, pursuant to Part 15 of the FCC Rules. These limits are designed to provide reasonable protection against harmful interference in a residential installation. This equipment generates, uses and can radiate radio frequency energy and, if not installed and used in accordance with the instructions, may cause harmful interference to radio communications. However, there is no guarantee that interference will not occur in a particular installation. If this equipment does cause harmful interference to radio or television reception, which can be determined by turning the equipment off and on, the user is encouraged to try to correct the interference by one or more of the following measures:

– Reorient or relocate the receiving antenna.
– Increase the separation between the equipment and receiver.
– Connect the equipment into an outlet on a circuit different from that to which the receiver is connected.
– Consult the dealer or an experienced radio/TV technician for help.

CAN ICES3(B)/NMB3(B)
Responsible Party for North-America:
Bosch eBike Systems Americas
Robert Bosch LLC
27211 Burbank, Foothill Ranch, CA 92610, USA,
www.bosch-ebike.com/us/

Privacy notice

When connecting the eBike to the **Bosch DiagnosticTool 3** or when exchanging eBike components, technical information about your eBike (e.g. manufacturer, model, bike ID, configuration data) as well as regarding the use of the eBike (e.g. total travel time, energy consumption, temperature) is transmitted to Bosch eBike Systems (Robert Bosch GmbH) for processing your request, in service cases and for the purposes of product improvement. More information on data processing can be found at www.bosch-ebike.com/privacy-full.

Note: To improve readability, some values are displayed without decimal places. These values have been rounded up or down.

Product Description and Specifications

Product Features of Purion 400

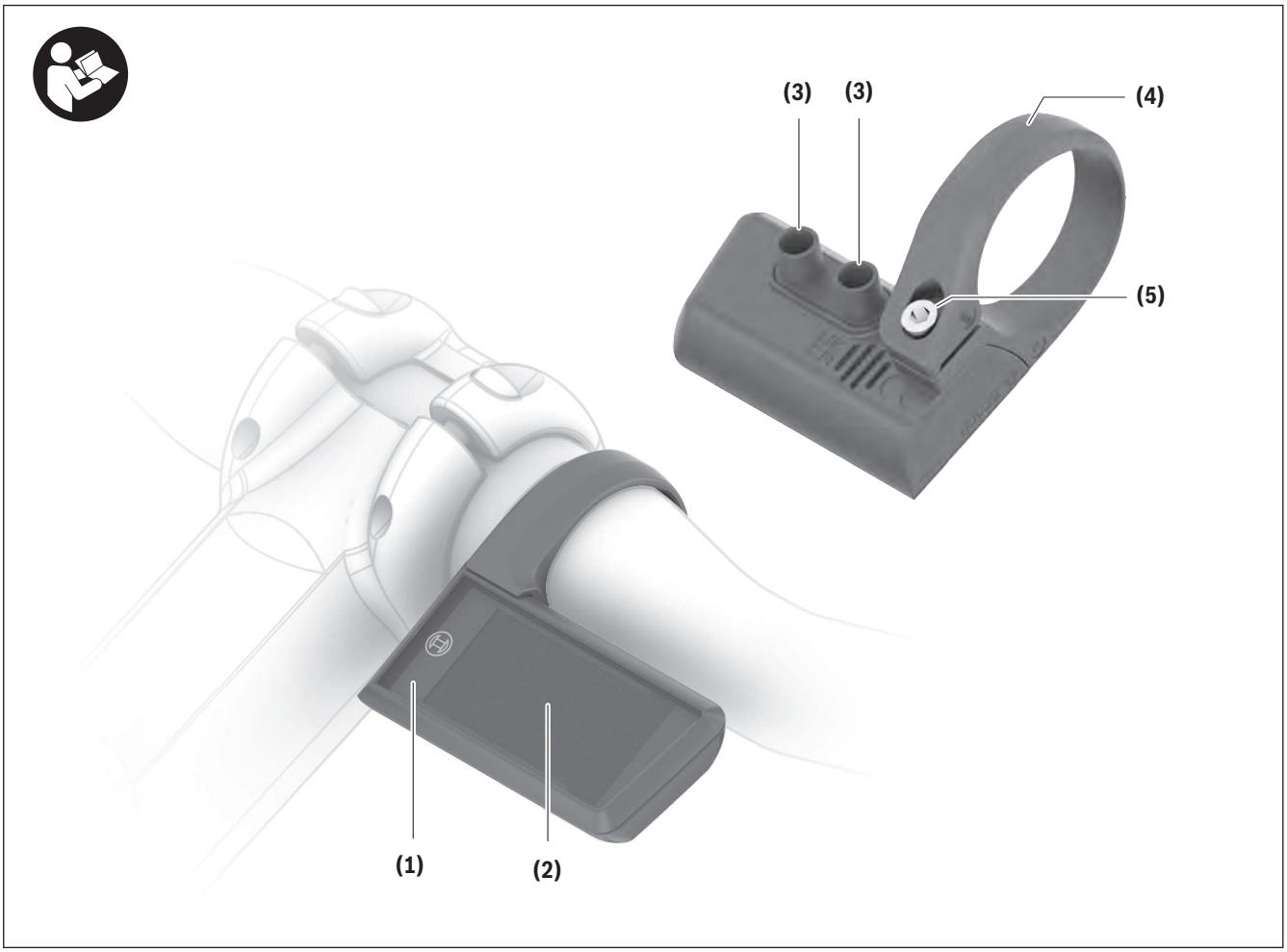

(1) On-board computer
(2) Display
(3) HMI connections
(4) Clamp
(5) Fastening screw
(6) Guide
(7) Recesses for the locking aid
(8) Locking aid

Intended use

The **Purion 400** on-board computer is designed to display cycling data on an eBike from the system generation **the smart system**.

So as to be able to use the **Purion 400** on-board computer fully, a compatible smartphone with the **eBike Flow** app is required.



Depending on the operating system of the smartphone, the **eBike Flow** app can be downloaded free of charge from the Apple App Store or Google Play Store.

Scan the code with your smartphone to download the **eBike Flow** app.

Instructions on how to use the **eBike Flow** app and more detailed information can be found at www.bosch-ebike.com/help-center.

The **Purion 400** on-board computer can only be used with eBikes with assistance up to **20 mph**.

Technical Data

On-board computer		Purion 400
Product code		BHU3500
Operating temperature[A)]	°F	23 to 104
Storage temperature	°F	50 to 104
Protection rating[B)]		IP55
Weight, approx.	lb	0.06

A) Temperatures outside of this range may cause faults in the display.

B) Any connection sockets on the **Purion 400** on-board computer that are not being used must be sealed with a blind plug.

The license information for the product is available at the following Internet address: www.bosch-ebike.com/licences

Assembly

Note: Do not use a ball end hex key on flat head hex screws.

Note: Please be aware that there are two different handlebar diameters (31.8 mm and 35 mm). Your bicycle retailer will help you to select the correct components.

Note: When installing the **Purion 400** on-board computer, refer to the recommended installation position.

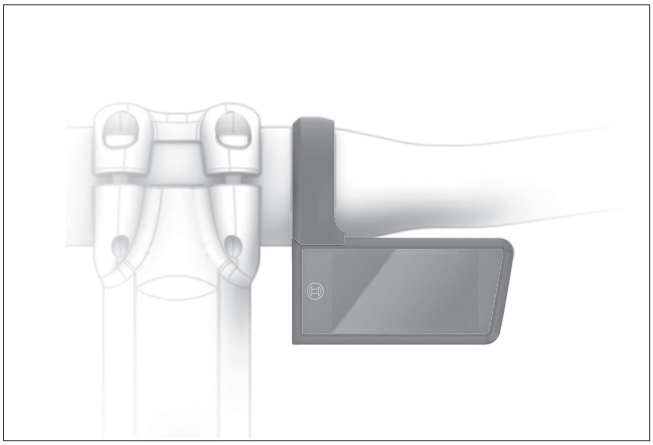

Securing on the Handlebars

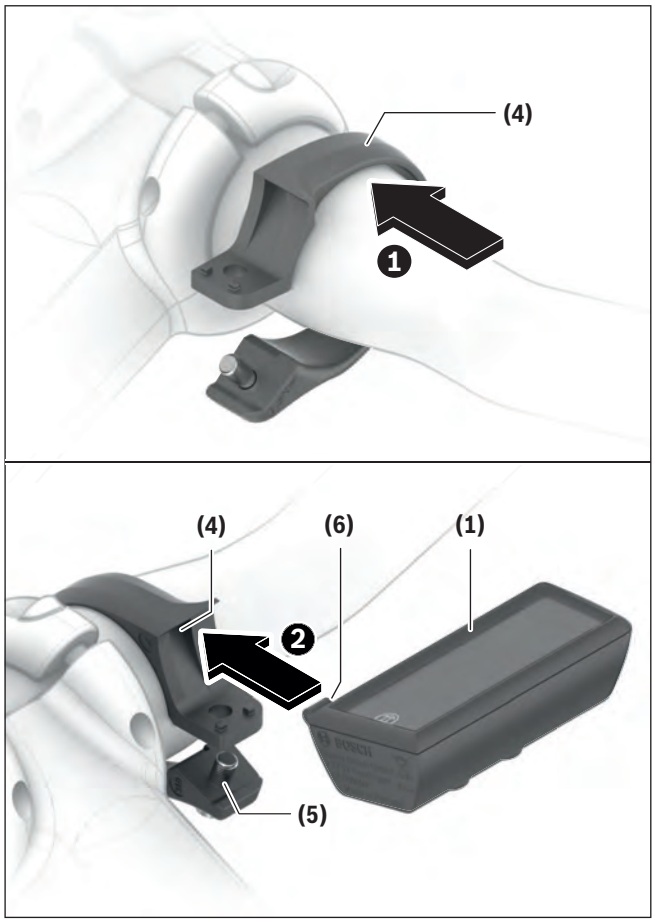

Gently pull the clamp **(4)** apart and place it on the handlebars ❶. Ensure that the fastening screw **(5)** does not scratch the handlebars and that the clamp on the cylindrical part of the handlebars is installed as close to the stem as possible.

Insert the guide **(6)** of the on-board computer **(1)** into the clamp **(4)** ❷.

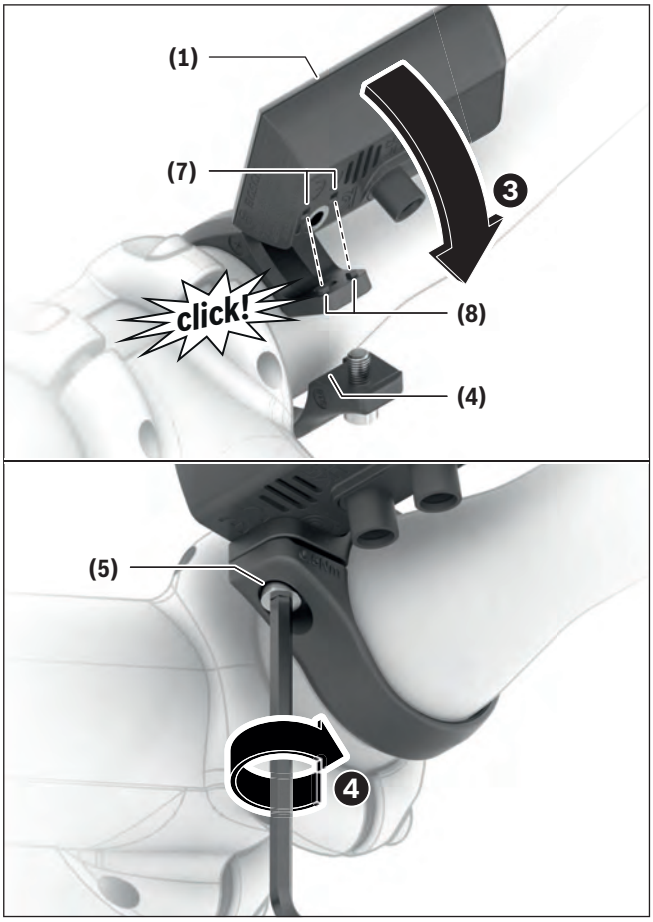

Swivel the on-board computer **(1)** downwards and press the on-board computer with the recesses **(7)** onto the locking aid **(8)** of the clamp **(4)** ❸ until they click into place. Turn the on-board computer **(1)**, including the clamp **(4)**, such that it is as easy as possible to read the display while cycling (sitting position). Then carefully tighten the clamp and the on-board computer using the fastening screw **(5)** ❹.

- ▶ **Prior to initial start-up, remove the protective film from the display to guarantee that the on-board computer is fully functional.** If the protective film remains on the display, this can impact the functionality/performance of the on-board computer.

Operation

The on-board computer can be operated via one of the operating units shown. The functions of the buttons on the operating units are explained in the following overview.

Depending on how long it is pressed for, the select button has 2 functions.

Note: The **Purion 400** on-board computer is not compatible with the **Purion 200** operating unit.

5-button operating unit

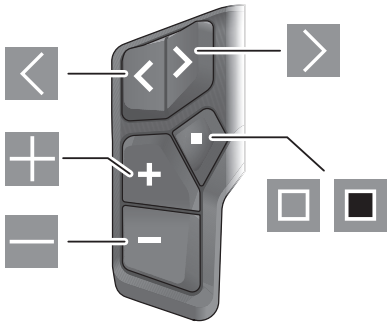

- Scroll to the left
- Scroll to the right
- Increase assistance level/scroll up
- Reduce assistance level/scroll down
- Open the select button/settings menu on the status page (press briefly)
- Open the quick menu (from any page except for the status page) (press for > 1 s)

3-button operating unit

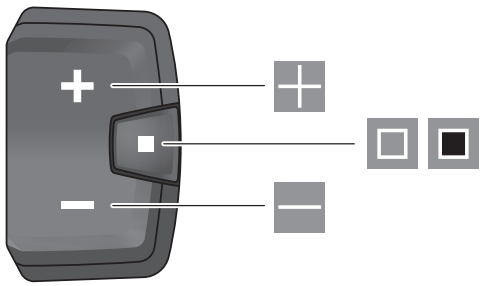

- Increase assistance level/scroll up
- Reduce assistance level/scroll down
- Select button/scroll through the screens (press briefly)
- Open the select button/menu (press and hold > 1 s)

Note: The fault codes can be acknowledged using the button ▣ on the control units shown.

Note: All screenshots showing the display and text are from the approved software version. The display, text and/or functions may change following a software update.

Status screen

From the start page, you can access the status page via the ◁ button on the 5-button operating unit and by repeatedly pressing the ▣ button on the 3-button operating unit.

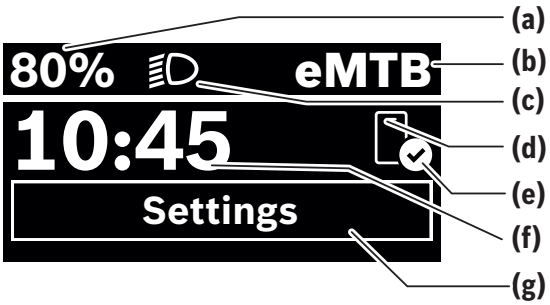

(a) State of charge of eBike battery (can be configured)
(b) Riding mode
(c) Bicycle lights
(d) Smartphone connection
(e) Connection status
(f) Time
(g) Settings menu

Accessing the Settings Menu

You can access the settings menu from this page.



Briefly press the select button ▣ to call up the settings menu.



Press and hold the select button ▣ > 1 s to call up the settings menu.

Note: The settings menu cannot be accessed while riding.

The **<Settings>** settings menu contains the following menu items:

– **<My eBike>**
  You can find the following menu items here.
  - **<Range reset>**
    The value for the range can be reset here.
  - **<Auto trip reset>**
    The trip meter reset time can be set here.
  - **<Wheel circumf.>**
    The value of the rear wheel circumference can be adjusted or reset to the standard setting here.
  - **<Service>**
    The next service date is shown here, provided that it has been set by the bicycle dealer.
  - **<Components>**
    The components used with their version numbers are displayed here.

– **<App connect>**
  The connection status of the **eBike Flow** app is displayed here.

– **<My Purion>**
  You can find the following menu items here.
  - **<Statusbar>**
    You can choose between the **<Battery>**, **<Time>** or **<Speed>** displays here.
  - **<Volume>**
    You can adjust the volume to **<High>**, **<Medium>**, **<Low>**, or switch off the buzzer completely with **<Off>**.
  - **<Shift recom.>**
    You can activate or deactivate the gear change recommendation here.
  - **<Trip summary>**
    You can activate or deactivate the summary of all ride information when switching off here.
  - **<Trick Check>**
    You can switch the trick check on and off here.
  - **<Time>**
    You can set the time here.
  - **<Time format>**
    You can select one of the two time formats (12 h/24 h) here.
  - **<Brightness>**
    You can set the on-board computer brightness here.
  - **<Language>**
    Here, you can select a preferred language from the following languages:
    English, German, French, Dutch, Italian, Spanish,

Portuguese, Swedish, Danish, Polish, Norwegian, Czech, Traditional Chinese for Taiwan, Korean, Japanese.

- **<Units>**
  You can choose between metric or imperial units here.
- **<Settings reset>**
  You can reset all of the system settings to the default values here.

– **<Information>**
You can find the following menu items here:

- **<Contact>**
  You can find contact details for Bosch eBike Systems here.
- **<Certificates>**
  You can find certificates and eLabels here.

Leaving the Settings Menu



Press the ▣ button to save the settings and leave the settings menu.

Press and hold the ▣ or ◁ button for more than one second to leave the settings menu without saving the settings.



Press the ▣ button to save the settings and leave the settings menu.

Press and hold the ▣ button for more than one second to leave the settings menu without saving the settings.

Quick menu

Selected settings are displayed on the quick menu. These settings can also be changed while riding.

You can access the quick menu by pressing and holding (> 1 s) the select button ▣.

It cannot be accessed from the status page.

The following settings can be changed via the quick menu:

– **<Ride>**
All data on the journey so far is reset to zero.

– **<eShift>** (optional)
The settings vary depending on the gearing in question. For example, you can set your cadence here, provided that the gearing supports this function.

Note: Depending on the configuration of your eBike, additional functions may be available.

Start page

If you did not select another page before the last time you switched off, you will be shown this page.

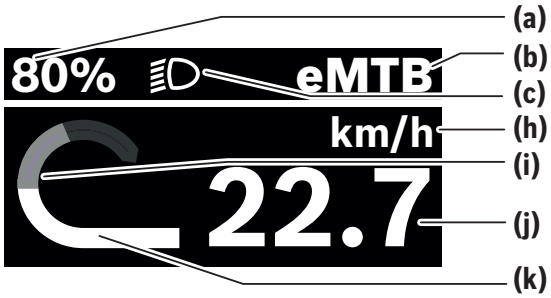

(a) State of charge of eBike battery (can be configured)
(b) Riding mode
(c) Bicycle lights
(h) Unit of speed indicator
(i) Your performance
(j) Speed
(k) Drive power

The indicators **(a)** to **(c)** form the statusbar and are shown on every page.

The navigation bar briefly indicates which page you are on.

You can access additional pages from the start page. The statistical data, eBike battery range and average values are displayed on these pages.

If you are on a different page to the start page when the eBike is switched off, the most recently displayed page will appear again when the eBike is switched on.



Press the ◁ button or ▷ button to scroll through the pages.



Briefly press the select button ▣ to scroll through all the pages. This is how you access, e.g. the status page.

<Display configuration>

You can find **<Display configuration>** in the **eBike Flow** app, under **<Settings>** → **<My eBike>**. For this, the eBike must be switched on and the smartphone connected.

You can personalize the display of your on-board computer by going to **<Display configuration>**:

– change the order of the individual screens
– add new screens
– edit and delete (some) existing content
– add new screen content after update

More information on **<Display configuration>** can be found at any time in the **eBike Flow** app.

Maintenance and Service

Maintenance and cleaning

Do not clean any of the components with pressurized water.

Keep the display of your on-board computer clean.

Clean your on-board computer using a soft cloth dampened only with water. Do not use cleaning products of any kind.

If you use a blind plug for the connection socket of the **Purion 400** on-board computer, regularly check that it is fitted securely. This ensures that no dirt or water gets in and damages the on-board computer.

Note: The **Purion 400** on-board computer may fog up under certain temperature and humidity conditions. This is not an error. Put the eBike in a heated room.

Have your eBike checked by an expert at least once a year (including mechanical parts, up-to-dateness of system software).

In addition, the bicycle dealer may enter the service date based on the distance traveled and/or on a period of time. In this case, the on-board computer displays a message telling you when the service date is due each time it is switched on.

Please have your eBike serviced and repaired by an authorized bicycle dealer.

- ▸ **Only have repairs performed by a certified bicycle dealer.**

Note: If you are handing in your eBike to a bicycle dealer for maintenance, it is recommended that you deactivate **<Lock & Alarm>**.

After-sales service and advice on using products

If you have any questions about the eBike and its components, contact an authorized bicycle retailer.

For contact details of authorized bike dealerships, please visit www.bosch-ebike.com.

More information about the eBike components and their functions can be found in the Bosch eBike Help Center.

Battery Recycling Program

The drive unit, on-board computer incl. operating unit, eBike battery, speed sensor, accessories and packaging should be disposed of in an environmentally correct manner.

Do not dispose of eBikes and their components with household waste.

You may recycle your Bosch battery pack by calling 1.800.822.8837.

Robert Bosch GmbH
72757 Reutlingen
Germany

www.bosch-ebike.com

0 275 U07 3BP (2024.04) T / 46

Owner’s Manual
Kiox 300 | 500

BHU3600 | BHU3700



en Original operating instructions

This manual contains important safety, performance and service information. Read and understand it along with the information provided to you by your bicycle manufacturer before using the product, and keep it for reference.

Table of Contents

Introduction 2
About Warnings 2
General Warnings 2
Using your Manual 3
Operating your Bosch On-board Computer 4
Safety instructions 4
Product Description and Specifications 7
Assembly 9
Operation 11
Maintenance and servicing 16
Maintenance and cleaning 16
After-sales service and advice on using products 16
Transport 16
Battery Recycling Program 16

Introduction

About Warnings

This manual contains many **DANGER**, **WARNING**, and **CAUTION** indicators concerning the consequences of failure to use, assemble, maintain, store, inspect and dispose of a Bosch-equipped eBike in a safe manner.

– The combination of the safety alert symbol and the word **DANGER** indicates a hazardous situation that, if not avoided, will result in death or serious injury.
– The combination of the safety alert symbol and the word **WARNING** indicates a hazardous situation that, if not avoided, could result in death or serious injury.
– The combination of the safety alert symbol and the word **CAUTION** indicates a hazardous situation that, if not avoided, could result in minor or moderate injury.

General Warnings



Read all safety warnings and all instructions. Failure to follow the warnings and instructions may result in death or serious injury.

Save all safety warnings and instructions for future reference.

The term **eBike battery** used in these operating instructions refers to all original Bosch eBike batteries from the system generation **the smart system**.

▶ **Read ALL accompanying manuals before riding the bike for the first time.** Your Bosch Drive System comes with additional manuals and documents provided by the manufacturer of the bicycle and other components. Failure to read and understand safety information can result in death or serious injury.

⚠ WARNING

▶ **This manual contains important safety, performance and service information.** Read it before you take the first ride on your new bicycle, and keep it for reference. The manual can also be found online at www.bosch-ebike.com.

▶ **This manual is intended to be read together with the separate user manual provided with your bicycle.** Be sure to read all provided documents including labels on the product before your first ride.

▶ **Take responsibility for your own SAFETY.** If you have any questions or do not understand something, consult with your dealer or the bicycle or component manufacturer.

▶ **Some eBike accessories may present a choking hazard to small children.** Keep these accessories away from children.

⚠ CAUTION

▶ **The Bosch Drive System adds weight to your bicycle which you may not be used to lift.** Avoid injury, use proper lifting techniques.

Using your Manual

In addition to the functions outlined here, changes to software relating to troubleshooting and functional modifications may be introduced at any time.

Graphics

The bicycle shown in this manual may differ slightly from your bicycle, but will be similar enough to help you understand our instructions.

RIGHT-HAND and LEFT-HAND sides are determined by facing in the direction the bicycle will travel when going forward. When you see a broken line (------), the item referred to is hidden from view.

Operating your Bosch On-board Computer

Safety instructions



Read all the safety and general instructions. Failure to follow the warnings and instructions may result in electric shock, fire and/or serious injury.

Save all safety warnings and instructions for future reference.

The term **eBike battery** used in these operating instructions refers to all original Bosch eBike batteries from the system generation **the smart system**.

- ▸ **Read and observe the safety warnings and instructions in all operating instructions of the eBike components and your eBike.**
- ▸ **Do not attempt to attach the on-board computer or the operating unit while riding!**
- ▸ **Do not allow yourself to be distracted by the on-board computer's display, particularly by text overlays shown according to the situation.** The display of riding information does not absolve the rider of the need to exercise due caution. If you do not focus exclusively on the traffic, you risk being involved in an accident. If you want to make entries in your on-board computer other than switching the riding mode, stop cycling and enter the relevant details.
- ▸ **Do not operate your smartphone during the journey.** If you do not concentrate exclusively on the traffic around you, you risk being involved in an accident. When using your smartphone, only enter the relevant data once you've stopped.
- ▸ **Set the brightness of the on-board computer such that you can adequately see important information like speed or warning symbols.** An incorrectly set on-board computer brightness can result in dangerous situations.
- ▸ **Do not open the on-board computer.** Opening the on-board computer can result in irreparable damage and void your warranty.
- ▸ **Do not use the on-board computer as a handle.** Lifting the eBike up by the on-board computer can cause irreparable damage to the on-board computer.
- ▸ **Do not stand your eBike upside down on its saddle and handlebars if the on-board computer or its holder protrude from the handlebars.** This may irreparably damage the on-board computer or the holder. Also remove the on-board computer before placing the eBike on a wall mount to ensure that the on-board computer does not fall off or become damaged.
- ▸ **The on-board computer Kiox 500 contains a buzzer. Loud signal tones may sound under certain circumstances. The loud sound can damage hearing.** Therefore, keep a sufficient distance from the on-board computer.
- ▸ **Do not enter information or make selections while riding.** Interacting with the display or remote control while riding can lead to accidents causing serious injury or death. You must observe road and traffic conditions, and comply with traffic laws at all times.
- ▸ **Accessing other apps, reading pop up messages/other content, or otherwise using your mobile device while operating an eBike may be distracting. Distracted driving is a serious safety concern and can lead to accidents causing serious injury or death. In order to prevent distracted driving, most mobile devices come equipped with a “Do Not Disturb” mode. The “Do Not Disturb” mode should be used while operating an eBike.** Please consult your device-specific instructions for more information. You, as the eBike operator, are fully responsible for ensuring that you pay attention to road conditions and comply with traffic laws at all times.

- ▶ **Do not activate push assistance function while riding on the bike.** Only use push assitance function when pushing the eBike.
- ▶ Please note that certain State or local laws may require that class III eBikes must be equipped with a functioning speedometer that displays speed in miles per hour. Riders must be aware of any and all applicable rules and regulations related to the operation or use of class III eBikes in any applicable jurisdictions before operating or otherwise using this product.

Safety Instructions in Conjunction with the Navigation System

- ▶ **Do not plan any routes while riding. Make sure that you come to a complete stop and only input a new destination while at a standstill.** If you do not concentrate exclusively on the traffic around you, you risk being involved in an accident.
- ▶ **Discontinue following your route if the navigation system suggests a path for you to take that may be risky or dangerous for you according to your capabilities as a rider.** Allow the navigation system to select an alternative route for you instead.
- ▶ **Make sure to observe all traffic signs regardless of the route proposed by the navigation system.** The navigation system is unable to take roadworks or temporary diversions into account.
- ▶ **Do not use the navigation system in circumstances where special attention must be given to safety, or if it is unclear how to proceed (road closures, diversions, etc.).** Always carry additional map sources and means of communication.
- ▶ **The navigation system instructs you to perform an unsafe or illegal maneuver.** Cancel the navigation system and choose an alternative route.
- ▶ **The navigation system directs you into an unsafe area.** Cancel the navigation system and choose an alternative route.
- ▶ **The navigation system does not direct you to the nearest emergency facility when needed.** Make an emergency call and inquire as to the quickest available route.
- ▶ **The location of the bicycle is indicated incorrectly by the navigation system.** Use a secondary source of information to determine where you are located currently.
- ▶ **The volume of the navigation system prevents you from hearing surrounding traffic while riding.** Ensure that you are able to perceive sounds from traffic in the vicinity at all times, so that you can react to potential dangers appropriately.
- ▶ NAVIGATION SERVICES ARE PROVIDED FOR PLANNING PURPOSES ONLY. INFORMATION FROM NAVIGATION SERVICES MAY DIFFER FROM ACTUAL CONDITIONS. USER MUST EXERCISE INDEPENDENT JUDGEMENT WHEN USING THE NAVIGATION SERVICES TO ENSURE THAT THE ROUTE PROVIDED BY THE NAVIGATION SERVICES IS SAFE AND APPROPRIATE FOR EBIKE USAGE.

NOTICE: This device complies with part 15 of the FCC Rules. Operation is subject to the following two conditions:

1. This device must not cause harmful interference, and
2. this device must accept any interference received, including interference that may cause undesired operation.

NOTICE: Changes or modifications made to this equipment not expressly approved by the Robert Bosch GmbH may void the FCC authorization to operate this equipment.

NOTE: This equipment has been tested and found to comply with the limits for a Class B digital device, pursuant to Part 15 of the FCC Rules. These limits are designed to provide reasonable protection against harmful interference in a residential installation. This equipment generates, uses and can radiate radio frequency energy and, if not installed and used in accordance with the instructions, may cause harmful interference to radio communications. However, there is no guarantee that interference will not occur in a particular installation. If this equipment does cause

harmful interference to radio or television reception, which can be determined by turning the equipment off and on, the user is encouraged to try to correct the interference by one or more of the following measures:
- Reorient or relocate the receiving antenna.
- Increase the separation between the equipment and receiver.
- Connect the equipment into an outlet on a circuit different from that to which the receiver is connected.
- Consult the dealer or an experienced radio/TV technician for help.

CAN ICES3(B)/NMB3(B)
Responsible Party for North-America:
Bosch eBike Systems Americas
Robert Bosch LLC
27211 Burbank, Foothill Ranch, CA 92610, USA,
www.bosch-ebike.com/us/

Privacy notice

When connecting the eBike to the **Bosch Diagnostic-Tool 3** or when exchanging eBike components, technical information about your eBike (e.g. manufacturer, model, bike ID, configuration data) as well as regarding the use of the eBike (e.g. total travel time, energy consumption, temperature) is transmitted to Bosch eBike Systems (Robert Bosch GmbH) for processing your request, in service cases and for the purposes of product improvement. More information on data processing can be found at www.bosch-ebike.com/privacy-full.

Note: To improve readability, some values are displayed without decimal places. These values have been rounded up or down.

Product Description and Specifications

Product Features Kiox

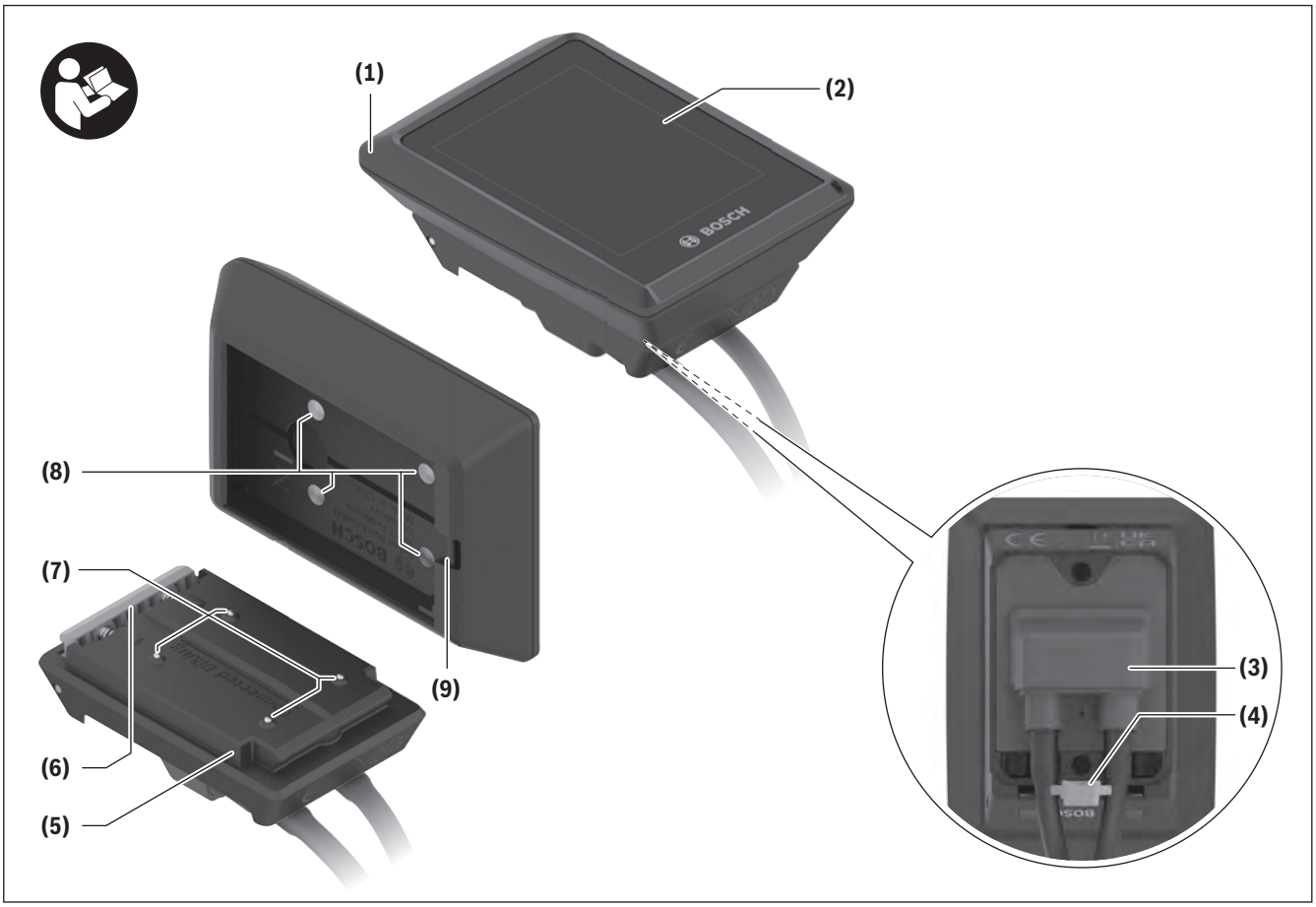

(1) On-board computer
(2) Display
(3) Cable outlet
(4) Removal blocker
(5) Display mount
(6) Snap-in hook
(7) Holder contacts
(8) On-board computer contacts
(9) Bridge for retaining strap[a)]
(10) Adapter tray
(11) Display mount fastening screw

a) Retaining strap is not included in the scope of delivery.

Intended use

The **Kiox 300/Kiox 500** on-board computer is designed to display cycling data on an eBike from the system generation **the smart system**.

So as to be able to use the **Kiox 300/Kiox 500** on-board computer fully, a compatible smartphone with the **eBike Flow** app is required.

Depending on the operating system of the smartphone, the **eBike Flow** app can be downloaded free of charge from the Apple App Store or Google Play Store.

Scan the code with your smartphone to download the **eBike Flow** app.

You can find instructions on how to use the **eBike Flow** app and more detailed information in the online operating instructions at www.bosch-ebike.com/help-center.

Technical data

On-board computer		Kiox 300	Kiox 500
Product code		BHU3600	BHU3700
Operating temperature[A)]	°F	+23 to +104	+23 to +104
Storage temperature	°F	+50 to +104	+50 to +104
Protection rating		IP55	IP55
Weight, approx.	oz	1.13	2.15

A) Temperatures outside of this range may cause faults in the display.

The license information for the product is available at the following Internet address: www.bosch-ebike.com/licences

Assembly

Fitting and removing the display (see figure A)

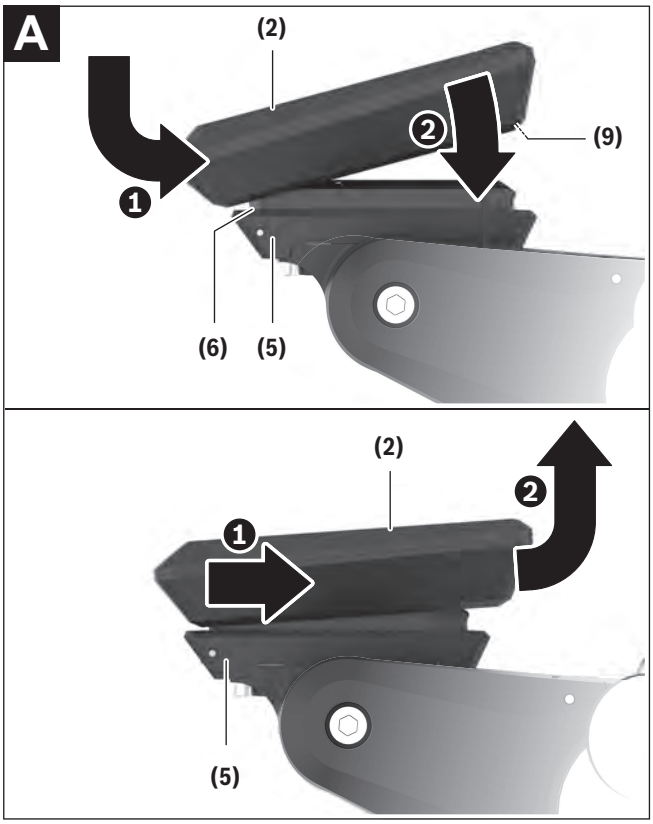

To **fit** the on-board computer **(1)**, attach it to the front edge of the display mount **(5)** in the direction of travel, on the snap-in hook **(6)** on ❶ and press the rear side of the on-board computer **(1)** onto the display mount **(5)** ❷.

To **remove** the on-board computer **(1)**, pull it towards you ❶ until you are able to lift off the on-board computer **(1)** ❷.

A retaining strap can be secured to the bridge **(9)**.

Note: The eBike switches off if you ride below **1.9 mph** and take the on-board computer out of the holder. This does not apply to eBikes with assistance up to **28 mph**.

Inserting the Locking Plate (see figure B)

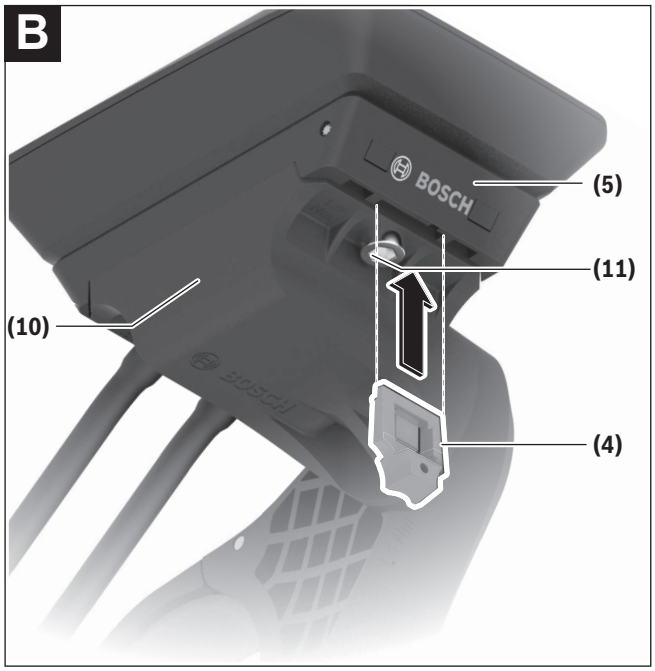

Note: Depending on the design/installation of the display mount, it may be the case that the removal blocker cannot be used. The on-board computer must be mounted.

Insert the locking plate **(4)** into the adapter shell **(10)** from below until you hear the locking plate **(4)** click into place.

From this point onwards, you can no longer remove the on-board computer **(1)** from the display mount **(5)** without removing the display mount **(5)** from the adapter tray **(10)** by loosening the two fastening screws **(11)**.

Note: The locking plate **(4)** is not an anti-theft device.

Before initial commissioning

- **Prior to initial start-up, remove the protective film from the display to guarantee that the on-board computer is fully functional.** If the protective film remains on the display, this can impact the functionality/performance of the on-board computer.

Operation

The on-board computer can be operated via one of the operating units shown. The functions of the buttons on the operating units are explained in the following overview.

Depending on how long it is pressed for, the select button has 2 functions.

5-button operating unit

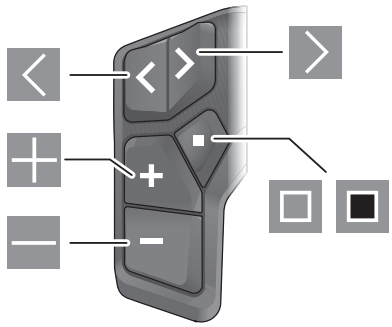

- Scroll to the left
- Scroll to the right
- Increase assistance level/scroll up
- Reduce assistance level/scroll down
- Open the select button/settings menu on the status page (press briefly)
- Open the quick menu (from any page except for the status page) (press for > 1 s)

3-button operating unit

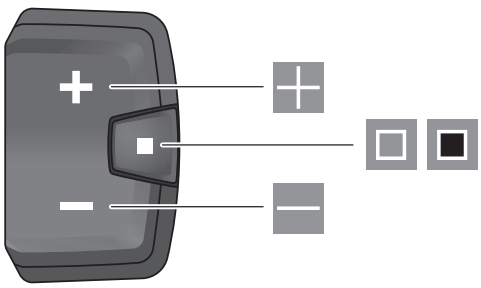

- Increase assistance level/scroll up
- Reduce assistance level/scroll down
- Select button/scroll through the screens (press briefly)
- Open the select button/menu (press and hold > 1 s)

Note: The fault codes can be acknowledged using the button ▣ on the control units shown.

Note: All screenshots showing the display and text are from the approved software version. The display, text and/or functions may change following a software update.

Status screen

From the start page, you can access the status page via the ◁ button on the 5-button operating unit and by repeatedly pressing the ▣ button on the 3-button operating unit.

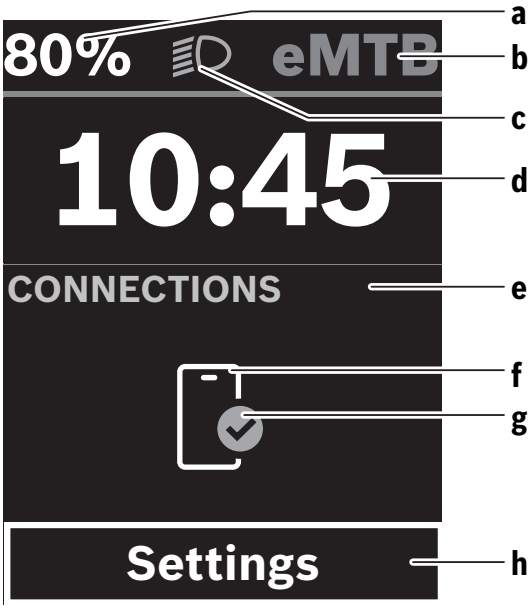

a State of charge of eBike battery (can be configured)
b Riding mode
c Bicycle lights
d Time
e Connection indicator
f Smartphone connection
g Connection status
h Settings menu

Accessing the Settings Menu

You can access the settings menu from this page.



Briefly press the select button ▣ to call up the settings menu.



Press and hold the select button ▣ > 1 s to call up the settings menu.

Note: The settings menu cannot be accessed while riding.

The **<Settings>** settings menu contains the following menu items:

– **<My eBike>**
You can find the following menu items here.
▪ **<Range reset>**
The value for the range can be reset here.
▪ **<Auto trip reset>**
The trip meter reset time can be set here.
▪ **<Wheel circumf.>**
The value of the rear wheel circumference can be adjusted or reset to the standard setting here.
▪ **<Service>**
The next service date is shown here, provided that it has been set by the bicycle dealer.
▪ **<Components>**
The components used with their version numbers are displayed here.

– **<App connect>**
The connection status of the **eBike Flow** app is displayed here.

– **<My Kiox>**
You can find the following menu items here.
▪ **<Statusbar>**
You can choose between the **<Battery>**, **<Time>** or **<Speed>** displays here.
Note: This function is not available for eBikes with a support level up to **28 mph**.
▪ **<Volume>** (only **Kiox 500**)
You can adjust the volume to **<High>**, **<Medium>**, **<Low>**, or switch off the buzzer completely with **<Off>**.
▪ **<Shift recommendation>**
You can activate or deactivate the gear change recommendation here.
▪ **<Trip summary>**
You can activate or deactivate the summary of all ride information when switching off here.
▪ **<Trick Check>**
You can switch the trick check on and off here.
▪ **<Time>**
You can set the time here.

- **<Time format>**
  You can select one of the two time formats (12 h/24 h) here.
- **<Brightness>**
  You can set the on-board computer brightness here.
- **<Language>**
  Here you can select a preferred language from the following languages:
  English, German, French, Dutch, Italian, Spanish, Portuguese, Danish, Swedish, Norwegian, Polish, Czech, Japanese, Traditional Chinese for Taiwan, Korean.
- **<Units>**
  You can choose between metric or imperial units here.
- **<Settings reset>**
  You can reset all of the system settings to the default values here.

– **<Information>**
You can find the following menu items here:

- **<Contact>**
  You can find contact details for Bosch eBike Systems here.
- **<Certificates>**
  You can find certificates and eLabels here.

Leaving the Settings Menu



Press the ▣ button to save the settings and leave the settings menu.

Press and hold the ▣ or ◁ button for more than one second to leave the settings menu without saving the settings.



Press the ▣ button to save the settings and leave the settings menu.

Press and hold the ▣ button for more than one second to leave the settings menu without saving the settings.

Quick menu

Selected settings are displayed on the quick menu. These settings can also be changed while riding.

You can access the quick menu by pressing and holding (> 1 s) the select button ▣.

It cannot be accessed from the status page.

The following settings can be changed via the quick menu:

– **<Ride>**
  All data on the journey so far is reset to zero.
– **<eShift>** (optional)
  The settings vary depending on the gearing in question. For example, you can set your cadence here, provided that the gearing supports this function.
– **<Navigation>**
  You can select your recent destinations as a new destination and/or end the running navigation.

Note: Depending on the configuration of your eBike, additional functions may be available.

Start page

If you did not select another page before the last time you switched off, you will be shown this page when you switch on the eBike.

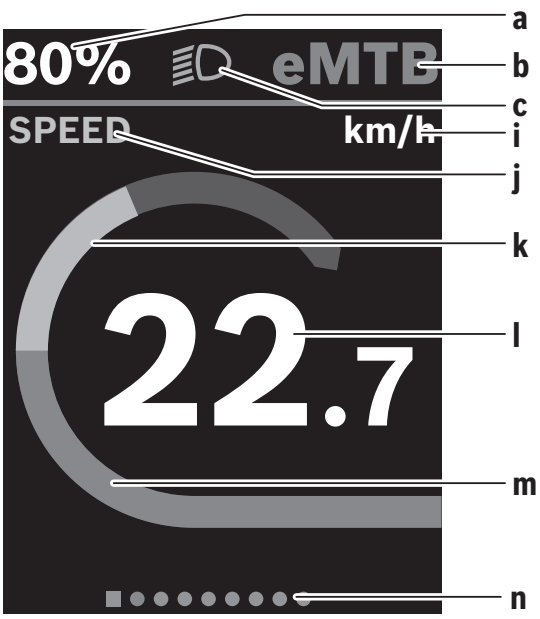

a State of charge of eBike battery (can be configured)
b Riding mode
c Bicycle lights
i Unit of speed indicator
j Indicator name
k Your performance
l Speed
m Drive power
n Navigation bar

The indicators **a** to **c** form the statusbar and are shown on every page.

The navigation bar **n** briefly indicates which page you are on.

You can access additional pages from the start page. The statistical data, eBike battery range and average values are displayed on these pages.

If you are on a different page to the start page when the eBike is switched off, the most recently displayed page will appear again when the eBike is switched on.



Press the ◁ button or ▷ button to scroll through the pages.



Briefly press the select button ▣ to scroll through the pages.

<Display configuration>

You can find **<Display configuration>** in the **eBike Flow** app, under **<Settings>** → **<My eBike>**. For this, the eBike must be switched on and the smartphone connected.

You can personalize the display of your on-board computer by going to **<Display configuration>**:

– change the order of the individual screens
– add new screens
– edit and delete (some) existing content
– add new screen content after update

More information on **<Display configuration>** can be found at any time in the **eBike Flow** app.

Navigation

The navigation function on the **Kiox 300/Kiox 500** assists you when exploring unfamiliar areas. You can start navigation on your smartphone in the **eBike Flow** app. You need the latest software version in order to use navigation. To do this, keep your **eBike Flow** app and your eBike up to date.

The route guidance and navigation information (e.g. turn-by-turn instructions) are shown on the on-board computer.

eBike Lock

<eBike Lock> can be set up for each eBike via the **eBike Flow** app under **<Settings>** → **<My eBike>** → **<Lock & Alarm>**. The smartphone and **Kiox 300/Kiox 500** on-board computer(s) can be set as digital keys for unlocking the eBike.

How it works

In combination with the **<eBike Lock>**, the smartphone and the on-board computer work like a key for the drive unit. The **<eBike Lock>** is activated by switching off the eBike. When switching on, the eBike checks if any pre-set key is available. This is indicated by a white LED flashing on the **LED Remote/System Controller** operating unit and by a lock symbol on both the **Purion 200** operating unit and the on-board computer.

When the eBike is switched off, the drive unit will emit a "Lock" sound (i.e. an audio signal that is played **once**) to indicate that the assistance from the drive unit is switched off.

When the eBike is switched on, the drive unit will emit two "Unlock" sounds (i.e. an audio signal that is played **twice**) to indicate that the assistance from the drive unit is enabled again.

More information about this can be found in the **eBike Flow** app or in the Bosch eBike Help Center on the website www.bosch-ebike.com/help-center.

Maintenance and servicing

Maintenance and cleaning

Do not clean any of the components with pressurized water.

Keep the display of your on-board computer clean.

Clean your on-board computer using a soft cloth dampened only with water. Do not use cleaning products of any kind.

Note: The **Kiox 300/Kiox 500** on-board computer may fog up under certain temperature and humidity conditions. This is not an error. Put the on-board computer in a heated room and leave it to dry.

Have your eBike checked by an expert at least once a year (including mechanical parts, up-to-dateness of system software).

In addition, the bicycle dealer may enter the service date based on the distance traveled and/or on a period of time. In this case, the on-board computer displays a message telling you when the service date is due each time it is switched on.

Please have your eBike serviced and repaired by an authorized bicycle dealer.

- ▸ **Only have repairs performed by a certified bicycle dealer.**

Note: If you are handing in your eBike to a bicycle dealer for maintenance, it is recommended that you deactivate **<Lock & Alarm>**.

After-sales service and advice on using products

If you have any questions about the eBike and its components, contact an authorized bicycle retailer.

For contact details of authorized bike dealerships, please visit www.bosch-ebike.com.

More information about the eBike components and their functions can be found in the Bosch eBike Help Center.

Transport

- ▸ **If you transport your eBike attached to the outside of your car, e.g. on a bike rack, remove the on-board computer and the eBike battery (except fixed mount battery) to avoid damaging them.**

Battery Recycling Program

The drive unit, on-board computer incl. operating unit, eBike battery, speed sensor, accessories and packaging should be disposed of in an environmentally correct manner.

Do not dispose of eBikes and their components with household waste.

You may recycle your Bosch battery pack by calling 1.800.822.8837.

Robert Bosch GmbH
72757 Reutlingen
Germany

www.bosch-ebike.com

0 275 U07 3BK (2024.03) T / 50

Owner’s Manual
LED Remote

BRC3600



en Original operating instructions

This manual contains important safety, performance and service information. Read and understand it along with the information provided to you by your bicycle manufacturer before using the product, and keep it for reference.

Table of contents

Introduction 2
About Warnings 2
General Warnings 2
Using your Manual 3
Operating the Control Unit 4
Safety instructions 4
Product description and specifications 7
Operation 9
Establishing a smartphone connection 12
Troubleshooting 14
Maintenance and Service 15
Maintenance/cleaning 15
After-sales service and advice on using products 15
Battery Recycling Program 15

Introduction

About Warnings

This manual contains many **DANGER**, **WARNING**, and **CAUTION** indicators concerning the consequences of failure to use, assemble, maintain, store, inspect and dispose of a Bosch-equipped eBike in a safe manner.

– The combination of the safety alert symbol and the word **DANGER** indicates a hazardous situation that, if not avoided, will result in death or serious injury.
– The combination of the safety alert symbol and the word **WARNING** indicates a hazardous situation that, if not avoided, could result in death or serious injury.
– The combination of the safety alert symbol and the word **CAUTION** indicates a hazardous situation that, if not avoided, could result in minor or moderate injury.

General Warnings



Read all safety warnings and all instructions. Failure to follow the warnings and instructions may result in death or serious injury.

Save all safety warnings and instructions for future reference.

The term **eBike battery** used in these operating instructions refers to all original Bosch eBike batteries from the system generation **the smart system**.

▶ **Read ALL accompanying manuals before riding the bike for the first time.** Your Bosch Drive System comes with additional manuals and documents provided by the manufacturer of the bicycle and other components. Failure to read and understand safety information can result in death or serious injury.

⚠ WARNING

▶ **This manual contains important safety, performance and service information.** Read it before you take the first ride on your new bicycle, and keep it for reference. The manual can also be found online at www.bosch-ebike.com.

▶ **This manual is intended to be read together with the separate user manual provided with your bicycle.** Be sure to read all provided documents including labels on the product before your first ride.

▶ **Take responsibility for your own SAFETY.** If you have any questions or do not understand something, consult with your dealer or the bicycle or component manufacturer.

▶ **Some eBike accessories may present a choking hazard to small children.** Keep these accessories away from children.

⚠ CAUTION

▶ **The Bosch Drive System adds weight to your bicycle which you may not be used to lift.** Avoid injury, use proper lifting techniques.

Using your Manual

In addition to the functions outlined here, changes to software relating to troubleshooting and functional modifications may be introduced at any time.

Graphics

The bicycle shown in this manual may differ slightly from your bicycle, but will be similar enough to help you understand our instructions.

RIGHT-HAND and LEFT-HAND sides are determined by facing in the direction the bicycle will travel when going forward. When you see a broken line (------), the item referred to is hidden from view.

Operating the Control Unit

Safety instructions



Read all the safety and general instructions. Failure to follow the warnings and instructions may result in electric shock, fire and/or serious injury.

Save all safety warnings and instructions for future reference.

The term **eBike battery** used in these operating instructions refers to all original Bosch eBike batteries from the system generation **the smart system**.

The terms **drive** and **drive unit** used in these operating instructions refer to all original Bosch drive units from the system generation **the smart system**.

- ▶ **Read and observe the safety warnings and instructions in all operating instructions of the eBike components and your eBike.**
- ▶ **Do not allow yourself to be distracted by the operating unit's display, particularly by text overlays shown according to the situation.** The display of riding information does not absolve the rider of the need to exercise due caution. If you do not focus exclusively on the traffic, you risk being involved in an accident. If you want to change settings on your operating unit, beyond just changing the riding mode, stop cycling to do so.
- ▶ **Do not attempt to attach the on-board computer or the operating unit while riding!**
- ▶ **Do not enter information or make selections while riding.** Interacting with the display or remote control while riding can lead to accidents causing serious injury or death. You must observe road and traffic conditions, and comply with traffic laws at all times.
- ▶ **Do not activate push assistance function while riding on the bike.** Only use push assitance function when pushing the eBike.
- ▶ **The push assistance function must only be used when pushing the eBike.** There is a risk of injury if the wheels of the eBike are not in contact with the ground while using the push assistance.
- ▶ **When the push assistance is activated, the pedals may turn at the same time.** When the push assistance function is activated, make sure that there is enough space between your legs and the turning pedals to avoid the risk of injury.
- ▶ **When using the push assistance, ensure that you can always control the eBike and hold it securely.** The push assistance can be suspended under certain conditions (e.g. obstacle on the pedal or accidentally slipping off the button of the operating unit). The eBike can suddenly move backwards towards you or start to tip. This poses a particular risk for the user if there is an additional load. When using the push assistance on the eBike, do not place the eBike in situations in which you cannot hold the eBike by yourself.
- ▶ **Do not stand your eBike upside down on its handlebars and saddle if the operating unit or its holder protrude from the handlebars.** This may irreparably damage the operating unit or the holder.
- ▶ **Do not connect a charger to the eBike battery if the display of the operating unit or the on-board computer indicates that a critical error has occurred.** This may result in damage to your eBike battery. The eBike battery may catch fire, thereby resulting in serious burns and other injuries.
- ▶ **The control unit features a wireless interface. Local operating restrictions, e.g. in airplanes or hospitals, must be adhered to.**
- ▶ **Caution!** When using the operating unit with *Bluetooth*®, this may cause interference that affects other devices and systems, airplanes and medical devices (e.g. pacemakers, hearing aids). Similarly, the possibility that this may cause damage to humans and animals in the immediate vicinity cannot

be completely excluded. Do not use the operating unit with *Bluetooth*® in the vicinity of medical devices, gas stations, chemical plants, areas with a potentially explosive atmosphere or on blast sites. Do not use the operating unit with *Bluetooth*® in airplanes. Avoid using the device in close proximity to your body over an extended period of time.

- The *Bluetooth*® wordmark and its logos are the registered trademarks and property of Bluetooth SIG, Inc. Any use of this wordmark/these logos by Robert Bosch GmbH, Bosch eBike Systems is under license.
- **Observe all national regulations which set out the approved use of eBikes.**

Safety warnings for charging the battery inside the remote control

- **Only charge the remote control with USB power source (5 V, 600 mA max) and USB cable rated at least 600 mA.** Using USB power source or USB cable not appropriately rated for the application may result in fire, explosion or personal injury.
- **Charge the remote control in temperatures above +32 degrees F (0 degrees C) and below +104 degrees F (40 degrees C). Store remote control in locations where temperatures will not exceed 104 degrees F (40 degrees C).** This is important to prevent serious damage to the battery in the remote control.
- **Do not expose remote control to fire or excessive temperature.** Exposure to fire or temperature above 212 °F (100 °C) may cause explosion.
- **Do not recharge the remote control (via USB port) in damp or wet environment.** Water entering remote control may result in electric shock or fire.
- **Never submerge remote control in fluid of any kind or allow fluid to enter them.** Corrosive or conductive fluid (such as seawater or industrial chemical or bleach containing products, etc.) can cause short circuit which may result in fire, personal injury and property damage.
- **Battery leakage may occur under extreme usage or temperature conditions. Avoid contact with skin and eyes.** The battery liquid is caustic and could cause chemical burns to tissues. If liquid comes in contact with skin, wash quickly with soap and water. If the liquid contacts your eyes, immediately flush eyes with water for a minimum of 15 minutes and seek medical attention.
- **Before each use, check the remote control, cable and plug.** If damage is detected, do not use the remote control. Damaged remote control, charging cables and plugs increase the risk of a fire, explosion and personal injury.
- **Do not disassemble remote control.** No user serviceable part inside. Incorrect reassembly or damage may result in fire or explosion.

NOTICE: This device complies with part 15 of the FCC Rules. Operation is subject to the following two conditions:

1. This device must not cause harmful interference, and
2. this device must accept any interference received, including interference that may cause undesired operation.

NOTICE: Changes or modifications made to this equipment not expressly approved by the Robert Bosch GmbH may void the FCC authorization to operate this equipment.

NOTE: This equipment has been tested and found to comply with the limits for a Class B digital device, pursuant to Part 15 of the FCC Rules. These limits are designed to provide reasonable protection against harmful interference in a residential installation. This equipment generates, uses and can radiate radio frequency energy and, if not installed and used in accordance with the instructions, may cause harmful interference to radio communications. However, there is no guarantee that interference will not occur in a particular installation. If this equipment does cause harmful interference to radio or television reception, which can be determined by turning the equipment off and on, the user is encouraged to try to correct the

interference by one or more of the following measures:
- Reorient or relocate the receiving antenna.
- Increase the separation between the equipment and receiver.
- Connect the equipment into an outlet on a circuit different from that to which the receiver is connected.
- Consult the dealer or an experienced radio/TV technician for help.

Radiofrequency radiation exposure Information:
The radiated output power of the device is far below the FCC radio frequency exposure limits. Nevertheless, the device shall be used in such a manner that the potential for human contact during normal operation is minimized.

This equipment complies with FCC radiation exposure limits set forth for an uncontrolled environment. This transmitter must not be co-located or operating in conjunction with any other antenna or transmitter.

ISED Notice (Canada)

This device contains licence-exempt transmitter(s)/ receiver(s) that comply with Innovation, Science and Economic Development Canada's licence-exempt RSS(s). Operation is subject to the following two conditions:

1. this device may not cause interference, and
2. this device must accept any interference, including interference that may cause undesired operation of the device.

This equipment complies with Canada radiation exposure limits set forth for an uncontrolled environment. This transmitter must not be co-located or operating in conjunction with any other antenna or transmitter.

Privacy notice

When connecting the eBike to the **Bosch Diagnostic-Tool 3** or when exchanging eBike components, technical information about your eBike (e.g. manufacturer, model, bike ID, configuration data) as well as regarding the use of the eBike (e.g. total travel time, energy consumption, temperature) is transmitted to Bosch eBike Systems (Robert Bosch GmbH) for processing your request, in service cases and for the purposes of product improvement. More information on data processing can be found at www.bosch-ebike.com/privacy-full.

Product description and specifications

Product Features

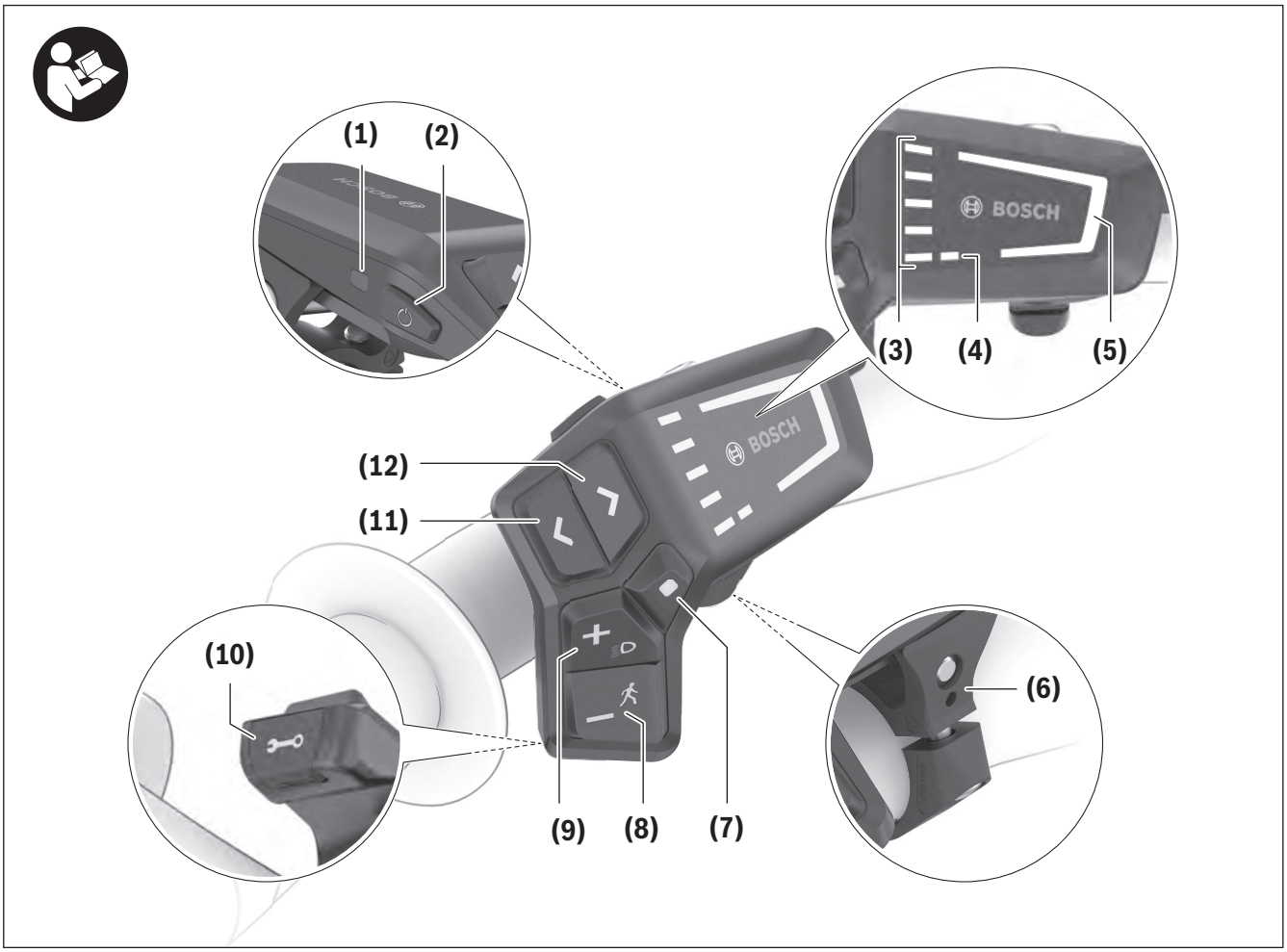

All illustrations of bike parts except for the drive unit, on-board computer including operating unit, speed sensor and the corresponding holders are schematic and may differ on your eBike.

(1) Ambient light sensor
(2) On/off button
(3) Charge indicator of the eBike battery
(4) ABS LED (optional)
(5) Riding mode LED
(6) Holder
(7) Select button
(8) Button for reducing the assistance level **–**/ walk assistance
(9) Button for increasing the assistance level **+**/ bicycle lights
(10) Diagnostics connection (for servicing purposes only)
(11) Button to reduce brightness/ go back
(12) Button to increase brightness/ go forward

Intended use

The **LED Remote** operating unit is designed for controlling an eBike/on-board computer from the system generation **the smart system**. You can also use them to control the **eBike Flow** app.

In order to be able to use the control unit to its fullest extent, a compatible smartphone with the **eBike Flow** app is required.

You can connect the **LED Remote** operating unit with your smartphone via *Bluetooth*®.

Depending on the operating system of the smartphone, the **eBike Flow** app can be downloaded free of charge from the Apple App Store or Google Play Store.

Scan the code with your smartphone to download the **eBike Flow** app.

Technical data

Control unit		LED Remote
Product code		BRC3600
Max. charging current of USB port[A)]	mA	600
USB port charging voltage[A)]	V	5
USB charging cable[B)]		USB Type-C®[C)]
Charging temperature	°F	32 to 104
Operating temperature	°F	23 to 104
Storage temperature	°F	50 to 104
Diagnostic interface		USB Type-C®[C)]
Internal lithium-ion battery	V mAh	3.7 75
Protection rating		IP55
Dimensions (without fastening)	mm	74 × 53 × 35
Weight	oz	1
Bluetooth® Low Energy 5.0		
– Frequency	MHz	2400–2480
– Transmission power	mW	1

A) Information for charging the **LED Remote** operating unit; external devices cannot be charged.

B) Not included with the product as standard

C) USB Type-C® and USB-C® are trademarks of USB Implementers Forum.

The license information for the product is available at the following Internet address: www.bosch-ebike.com/licences

Operation

Requirements

The eBike can then only be switched on when the following requirements are met:

- A sufficiently charged eBike battery is inserted (see operating instructions for the eBike battery from the system generation **the smart system**).
- The speed sensor is connected properly (see operating instructions for the drive unit from the system generation **the smart system**).

Before setting off, make sure that you can easily reach the buttons on the operating unit. It is recommended to align the plus/minus buttons level so that it is almost perpendicular to the ground.

Note: All screenshots showing the display and text are from the approved software version. The display, text and/or functions may change following a software update.

Control unit power supply

If a sufficiently charged eBike battery is inserted into the eBike and the eBike is switched on, the internal battery of the operating unit is powered and charged.

If the state of charge of the internal battery of the operating unit is very low, you can charge it via the diagnostics connection **(10)** with a USB Type-C® cable using a power bank or another suitable power source (charging voltage **5 V**; charging current max. **600 mA**).

Always close the flap of the diagnostics connection **(10)** so that no dust or moisture can enter.

Switching the eBike on/off

To **switch on** the eBike, briefly press the on/off button **(2)**. After the starting animation, the state of charge of the eBike battery is displayed in color with the battery charge indicator **(3)** and the set riding mode with the **(5)** display. The eBike is ready to ride.

The display brightness is controlled by the ambient light sensor **(1)**. Therefore, do not cover the ambient light sensor **(1)**.

The drive is activated as soon as you start pedaling (except in the **OFF** riding mode). The drive power varies depending on the riding mode set.

As soon as you stop pedaling when in normal operation, or as soon as you have reached a speed of **20/28 mph**, the drive switches off the assistance. The drive is automatically re-activated as soon you start pedaling again and the speed is below **20/28 mph**.

To **switch off** the eBike, briefly press the on/off button **(2)** (< 3 s). The battery charge indicator of the eBike battery **(3)** and the riding mode LED **(5)** go out.

If no power is requested from the drive for approx. **10** minutes (e.g. due to the eBike being stationary) and no button is pressed, the eBike switches off automatically.

Battery charge indicator of the eBike battery

In the battery charge indicator of the eBike battery **(3)**, each ice-blue bar represents 20 % capacity and each white bar represents 10 % capacity. The topmost bar shows the maximum capacity.

Example: Four ice-blue bars and one white bar are displayed. The state of charge is between 81 % and 90 %.

If capacity is low, both of the lower displays change color:

Bar	Capacity
2 × orange	30 % to 21 %
1 × orange	20 % to 11 %
1 × red	10 % to reserve
1 × red flashing	Reserve to empty

If the eBike battery is being charged, the topmost bar on the battery charge indicator of the eBike battery **(3)** flashes.

Outside of the eBike, the eBike battery's state of charge is indicated by the LEDs on the eBike battery.

Selecting the Riding Mode

You can set how much the eBike drive assists you while pedaling on the operating unit using the reduce assistance level **– (8)** and increase assistance level **+ (9)** buttons. The riding mode can be changed even while cycling, and is displayed in color.

Riding mode	Notes
OFF	Drive assistance is switched off. The eBike can just be moved by pedaling, as with a normal bicycle.
ECO	Effective assistance with maximum efficiency, for maximum range
ECO+	Range-optimized riding mode that only switches on the drive assistance above a certain rider performance; for for normal riding and for a maximum range
TOUR	Steady assistance, long range for touring
TOUR+	Dynamic assistance for normal riding and biking sports
eMTB	Optimal assistance whatever the terrain, rapid acceleration when starting from a standstill, improved dynamics and top performance
SPORT	Powerful assistance, for mountain biking and for cycling in urban traffic
TURBO	Maximum assistance even at a high cadence, for biking sports
AUTO	The assistance is dynamically adapted to the riding situation.
RACE	Maximum assistance on the eMTB racetrack; very direct response and maximum "Extended Boost" for the best possible performance in competitive situations
CARGO	Steady, powerful assistance for safely transporting heavy weights
SPRINT	Dynamic assistance according to cadence – for athletic eGravel and eRoad cycling with rapid sprints and frequent ascents

The designations and configuration of the riding modes can be preconfigured by the manufacturer and selected by the bicycle retailer.

Note: The available riding modes depend on the respective drive unit.

Adjusting the Riding Mode

The riding modes can be adapted within certain limits using the **eBike Flow** app. This gives you the option of adjusting your eBike to your personal requirements.

It is not possible to create a completely new riding mode. You can only adjust the riding modes that have been enabled by the manufacturer or dealer on your system. This may be fewer than four riding modes.

In addition, restrictions in your country may mean that it is not possible to adjust a particular riding mode.

The following parameters are available for making adjustments:

- Assistance in relation to the base value of the riding mode (within the legal requirements)
- Drive response
- Top limit speed (within the legal requirements)
- Maximum torque (within the limits of the drive)

Note: Please ensure that your modified riding mode retains the position, name and color on all on-board computers and controls.

Interaction of the drive unit with the gear-shifting

You should shift through gears on an eBike in the same manner as when using a normal bicycle (observe the operating instructions of your eBike with regard to this point).

Irrespective of the type of gear shifting, it is advisable that you briefly reduce the pressure on the pedals

when changing gear. This will aid gear shifting and reduce wear on the powertrain.

By selecting the correct gear, you can increase your speed and range while applying the same amount of force.

Therefore, follow the gear-shifting recommendations that are displayed to you on your on-board computer.

Switching bike lights on/off

Before starting each journey, check that your bike lights are working correctly.

To **switch on** the bicycle lights, press the bicycle lights button **(9)** for more than 1 s.

You can use the "Reduce brightness" **(11)** and "Increase brightness" **(12)** buttons to control the brightness of the LEDs on the operating unit.

Switching the push assistance on/off

The push assistance aids you when pushing your eBike. The maximum speed of the push assistance is **2.5 mph**. The manufacturer's default setting can be lower and may need to be adjusted by the bicycle retailer.

- ▶ **The push assistance function must only be used when pushing the eBike.** There is a risk of injury if the wheels of the eBike are not in contact with the ground while using the push assistance.
- ▶ **If the selected gear is too high, the drive unit may not be able to move the eBike or activate the roll-away lock.**

To **start** push assistance, press and hold the push assistance button **(8)** for more than 1 s. The battery charge indicator of the eBike battery **(3)** goes out and a white moving light in the direction of travel shows that it is ready.

To **activate** walk assistance, one of the following actions must occur within the next 10 s:

- – Push the eBike forward.
- – Push the eBike backward.
- – Perform a sideways tilting movement with the eBike.

After activation, the drive begins to push and the continuously filling white bars change color to ice-blue.

If you release the walk assistance **(8)** button, walk assistance is stopped. You can reactivate walk assistance within 10 s by pressing the walk assistance **(8)** button.

If you do not reactivate walk assistance within 10 s, walk assistance automatically switches off.

Walk assistance is always ended if:

- – The rear wheel jams,
- – The bicycle cannot move over ridges,
- – A body part is blocking the bike crank,
- – An obstacle continues to turn the crank,
- – You start pedaling,
- – The increase assistance level **+**/bicycle lights **(9)** button or on/off button **(2)** is pressed.

Walk assistance has a roll-away lock, i.e. even after walk assistance has been used, rolling backwards is actively curbed by the drive for a few seconds, and you cannot push the eBike backwards or can only do so with difficulty.

The roll-away lock is immediately deactivated by pressing the increase assistance level **+**/bicycle lights **(9)** button.

The push assistance function is subject to local regulations; the way it works may therefore differ from the description above. It can also be deactivated.

ABS – Anti-lock braking system (optional)

If the eBike is equipped with a Bosch eBike ABS from the system generation **the smart system**, the ABS LED **(4)** lights up when the eBike system starts.

After moving off, the ABS internally checks its functionality and the ABS LED goes off.

In the event of a fault, the ABS LED **(4)** lights up, together with the orange flashing riding mode LED **(5)**. You can acknowledge the error with the select button **(7)** and the flashing riding mode LED **(5)** will go out. While the ABS LED **(4)** is lit up, the ABS is not in operation.

For details on the ABS and how it works, please refer to the ABS operating instructions.

Establishing a smartphone connection

In order to be able to use the following eBike functions, a smartphone with the **eBike Flow** app is required.

Connection to the app occurs via a *Bluetooth*® connection.

Switch on the eBike and wait for the starting animation. Do not ride the eBike.

Begin *Bluetooth*® pairing by pressing and holding (> 3 s) the on/off button **(2)**. Release the on/off button **(2)** as soon as the topmost bar on the battery charge indicator of the eBike battery **(3)** indicates the pairing process by flashing blue.

Confirm the connection request in the app.

Activity tracking

In order to record activities, it is necessary to register and log into the **eBike Flow** app.

To record activities, you must consent to the storage of your location data in the app. Without this, your activities cannot be recorded in the app. For location data to be recorded, you must be logged in as the user.

eBike Lock

<eBike Lock> can be set up for each eBike via the **eBike Flow** app under **<Settings>** → **<My eBike>** → **<Lock & Alarm>**. In the process, a key for unlocking the eBike is saved on the smartphone and/or the **Kiox 300/Kiox 500** on-board computer.

The **<eBike Lock>** is automatically enabled in the following cases:

– The eBike is switched off via the operating unit
– The eBike is switched off automatically

If the eBike is switched on and the smartphone is connected to the eBike via *Bluetooth*®, or the pre-set on-board computer is fitted in the holder, the eBike will be unlocked.

<eBike Lock> is connected to your **user account**.

Should you lose your smartphone, you can log in via another smartphone using the **eBike Flow** app, and unlock your user account and the eBike.

If the on-board computer is lost, you can reset all digital keys in the **<Lock & Alarm>** menu item of the **eBike Flow**app.

Warning! If you select a setting in the app that leads to disadvantages for the **<eBike Lock>** (e.g. deletion of your eBike or user account), then you will first be shown warning messages. **Please read through these thoroughly and adhere to the warnings that are issued (e.g. before deleting your eBike or user account).**

Setting up <eBike Lock>

In order to be able to set up the **<eBike Lock>**, the following conditions must be fulfilled:

– The **eBike Flow** app has been installed.
– A user account has been created.
– No update is currently being carried out on the eBike.
– The eBike is connected to the smartphone via *Bluetooth*®.
– The eBike is stationary.
– The smartphone is connected to the Internet.
– The eBike battery is sufficiently charged, and the charging cable is not connected.

You can set up **<eBike Lock>** in the **eBike Flow** app under the **<Lock & Alarm>** menu item.

The eBike drive only provides support if, when the eBike is switched on, the smartphone is connected to the eBike via *Bluetooth*® or the on-board computer is fitted in the holder. If the smartphone is used as a key, your smartphone must have *Bluetooth*® switched on, and the **eBike Flow** app must be active in the background. If **<eBike Lock>** is activated, you can also use your eBike without support from the drive unit.

Compatibility

The **<eBike Lock>** is compatible with all Bosch drive units from the system generation **the smart system**.

How it works

In combination with the **<eBike Lock>**, the smartphone and the on-board computer work like a key for the drive unit. The **<eBike Lock>** is activated by switching off the eBike. When switching on, the eBike checks if any pre-set key is available. A white LED flashes on the **LED Remote** operating unit, and a lock symbol is displayed on the on-board computer.

Note: The **<eBike Lock>** alone does not provide adequate theft protection; it is simply a supplement to a mechanical lock. The **<eBike Lock>** does not provide any form of mechanical lock for the eBike. Only the assistance from the drive unit is deactivated. The drive unit will be unlocked for as long as the smartphone is connected to the eBike via *Bluetooth*® or the on-board computer is placed in the holder.

If you want to give third parties temporary or permanent access to your eBike, share one of the preset digital keys (on-board computer/smartphone). As a result, the <eBike Lock> is still active. If you want to take your eBike to a service, the <eBike Lock> can be deactivated in the eBike Flow app in the menu item<Settings>. If you wish to sell your eBike, you will also need to delete the eBike from your user account in the **eBike Flow** app in the **<Settings>** menu item.

When the eBike is switched off, the drive unit will emit a "Lock" sound (i.e. an audio signal that is played **once**) to indicate that the assistance from the drive unit is switched off.

When the eBike is switched on, the drive unit will emit two "Unlock" sounds (i.e. an audio signal that is played **twice**) to indicate that the assistance from the drive unit is enabled again.

The "Lock" sound will help you determine whether or not the **<eBike Lock>** on your eBike is active. The audio signal is activated by default, but it can be deactivated in the **eBike Flow** app in the **<Locking sound>** menu item by selecting the lock symbol under your eBike.

Note: If you can no longer set up or switch off the **<eBike Lock>**, please contact your bicycle dealer.

Replacing eBike components and <eBike Lock>

Replacing the smartphone

1. Install the **eBike Flow** app on the new smartphone.
2. Log in using **the same** account with which you activated **<eBike Lock>**.
3. **<eBike Lock>** is displayed as set up in the **eBike Flow** app.

More information about this can be found in the **eBike Flow** app or in the Bosch eBike Help Center on the website www.bosch-ebike.com/help-center.

Software updates

Software updates must be started manually in the **eBike Flow** app.

Software updates are transferred from the app to the operating unit in the background as soon as it is connected to the app. During the update process, the green flashing of the battery charge indicator of the eBike battery **(3)** indicates the progress. The eBike is then restarted.

You can control the software updates via the **eBike Flow** app.

Troubleshooting

The operating unit shows whether critical errors or less critical errors occur on the eBike.

The error messages generated by the eBike can be read via the **eBike Flow** app or by your bicycle retailer.

Via a link in the **eBike Flow** app, information about the error and support for rectifying the error can be displayed.

Less critical errors

Less critical errors are shown by orange flashing, followed by the riding mode LED **(5)** lighting up continuously. Pressing the select button **(7)** confirms the error and the riding mode LED **(5)** once again continuously shows the color of the set riding mode.

You can use the following table to rectify the errors yourself if necessary. Otherwise, please contact your bicycle retailer.

Number	Troubleshooting
523005 **514001** **514002** **514003** **514006**	The indicated error numbers show that there is interference when the sensors detect the magnetic field. See whether you have lost the magnet while riding. If you are using a magnet sensor, check that the sensor and magnet have been properly installed. Make sure too that the cable to the sensor is not damaged. If you are using a rim magnet, make sure that you do not have any magnetic field interference in the vicinity of the drive unit.
680007 **680009** **680012** **680014** **680016** **680017**	The indicated error numbers show that the eBike battery is outside of the permissible operating temperature. The charging of the eBike battery is interrupted. As soon as the operating temperature returns to the permissible range, the charging process will start again.

Critical errors

Critical errors are shown by the riding mode LED **(5)** and the battery charge indicator of the eBike battery **(3)** flashing red and then lighting up continuously. Follow the instructions in the table below if a critical error occurs.

Number	Handling instructions
6A0004	Remove the PowerMore battery and restart your eBike. If the problem persists, please contact your specialist retailer.
890000	– Acknowledge the error code. – Restart the eBike system. If the problem persists: – Acknowledge the error code. – Perform the software update. – Restart the eBike system. If the problem persists: – Please contact a Bosch eBike systems specialist retailer.

Maintenance and Service

Maintenance/cleaning

⚠ WARNING

- ▶ **Do not open any of the components. Service should only be carried out at an authorized Bosch eBike dealer.** Failure to follow above warning can cause death or serious injury. Refer to your bicycle manual or component manual for all non-Bosch drive system components.
- ▶ **Do not submerge your eBike components in water, or wash with pressurized hose.** Your Bosch drive unit is designed to be water tight to rain water or non-pressure hose washing.
- ▶ **Do not paint any components of the Bosch drive system as they may cause premature failure of the component.**

The operating unit must not be cleaned with pressurized water.

Keep the operating unit clean. Dirt can cause faulty brightness detection.

Clean your operating unit using a soft cloth dampened only with water. Do not use cleaning products of any kind.

- ▶ **Only have repairs performed by a certified bicycle dealer.**

Note: If you are handing in your eBike to a bicycle dealer for maintenance, it is recommended that you deactivate **<Lock & Alarm>**.

Note: If you do not use the **LED Remote** operating unit for a long time, charge it in accordance with (see "Control unit power supply", page English – 9).

After-sales service and advice on using products

If you have any questions about the eBike and its components, contact an authorized bicycle retailer. For contact details of authorized bike dealerships, please visit www.bosch-ebike.com.

More information about the eBike components and their functions can be found in the Bosch eBike Help Center.

Battery Recycling Program

The drive unit, on-board computer incl. operating unit, eBike battery, speed sensor, accessories and packaging should be disposed of in an environmentally correct manner.

Do not dispose of eBikes and their components with household waste.

You may recycle your Bosch battery pack by calling 1.800.822.8837.

Robert Bosch GmbH
72757 Reutlingen
Germany

www.bosch-ebike.com

0 275 U07 3RL (2024.03) T / 52

Owner’s Manual
Display Mount

BDS3210 | BDS3250 | BDS3620 | BDS3630



en Original operating instructions

This manual contains important safety, performance and service information. Read and understand it along with the information provided to you by your bicycle manufacturer before using the product, and keep it for reference.

Table of contents

Introduction 2
About Warnings 2
General Warnings 2
Using your Manual 3
Operating your Bosch Display Holder 4
Safety instructions 4
Product description and specifications 5
Fitting 6
Maintenance and servicing 8
Maintenance and cleaning 8
After-sales service and advice on using products 8
Disposal 8

Introduction

About Warnings

This manual contains many **DANGER**, **WARNING**, and **CAUTION** indicators concerning the consequences of failure to use, assemble, maintain, store, inspect and dispose of a Bosch-equipped eBike in a safe manner.

– The combination of the safety alert symbol and the word **DANGER** indicates a hazardous situation that, if not avoided, will result in death or serious injury.
– The combination of the safety alert symbol and the word **WARNING** indicates a hazardous situation that, if not avoided, could result in death or serious injury.
– The combination of the safety alert symbol and the word **CAUTION** indicates a hazardous situation that, if not avoided, could result in minor or moderate injury.

General Warnings



Read all safety warnings and all instructions. Failure to follow the warnings and instructions may result in death or serious injury.

Save all safety warnings and instructions for future reference.

The term **eBike battery** used in these operating instructions refers to all original Bosch eBike batteries from the system generation **the smart system**.

▶ **Read ALL accompanying manuals before riding the bike for the first time.** Your Bosch Drive System comes with additional manuals and documents provided by the manufacturer of the bicycle and other components. Failure to read and understand safety information can result in death or serious injury.

⚠ WARNING

▶ **This manual contains important safety, performance and service information.** Read it before you take the first ride on your new bicycle, and keep it for reference. The manual can also be found online at www.bosch-ebike.com.

▶ **This manual is intended to be read together with the separate user manual provided with your bicycle.** Be sure to read all provided documents including labels on the product before your first ride.

▶ **Take responsibility for your own SAFETY.** If you have any questions or do not understand something, consult with your dealer or the bicycle or component manufacturer.

▶ **Some eBike accessories may present a choking hazard to small children.** Keep these accessories away from children.

⚠ CAUTION

▶ **The Bosch Drive System adds weight to your bicycle which you may not be used to lift.** Avoid injury, use proper lifting techniques.

Using your Manual

In addition to the functions outlined here, changes to software relating to troubleshooting and functional modifications may be introduced at any time.

Graphics

The bicycle shown in this manual may differ slightly from your bicycle, but will be similar enough to help you understand our instructions.

RIGHT-HAND and LEFT-HAND sides are determined by facing in the direction the bicycle will travel when going forward. When you see a broken line (------), the item referred to is hidden from view.

Operating your Bosch Display Holder

Safety instructions



Read all the safety information and instructions. Failure to observe the safety information and follow instructions may result in electric shock, fire and/or serious injury.

Save all safety warnings and instructions for future reference.

- ▸ **Read and observe the safety warnings and instructions in all operating instructions of the eBike components and your eBike.**
- ▸ **The contact surfaces of the display holder may become very hot (> 140 °F). Allow the contact surfaces to adjust to the ambient temperature before you touch them.** This is particularly important when using a SmartphoneGrip.
- ▸ **Keep swallowable small parts away from small children.** There is a risk of serious injury.
- ▸ **Never short-circuit the pins.** The display holder may be irreparably damaged and must then be replaced.
- ▸ **Ensure that the contacts are free of dirt.** By doing this, you prevent malfunctions or damage.
- ▸ **After a fall, check the display holder for sharp edges.** Replace it if required.
- ▸ **Do not stand your eBike upside down on its saddle and handlebars if the on-board computer or its holder protrude from the handlebars.** This may irreparably damage the on-board computer or the holder. Also remove the on-board computer before placing the eBike on a wall mount to ensure that the on-board computer does not fall off or become damaged.
- ▸ **Observe all national regulations which set out the approved use of eBikes.**

Product description and specifications

Product Features

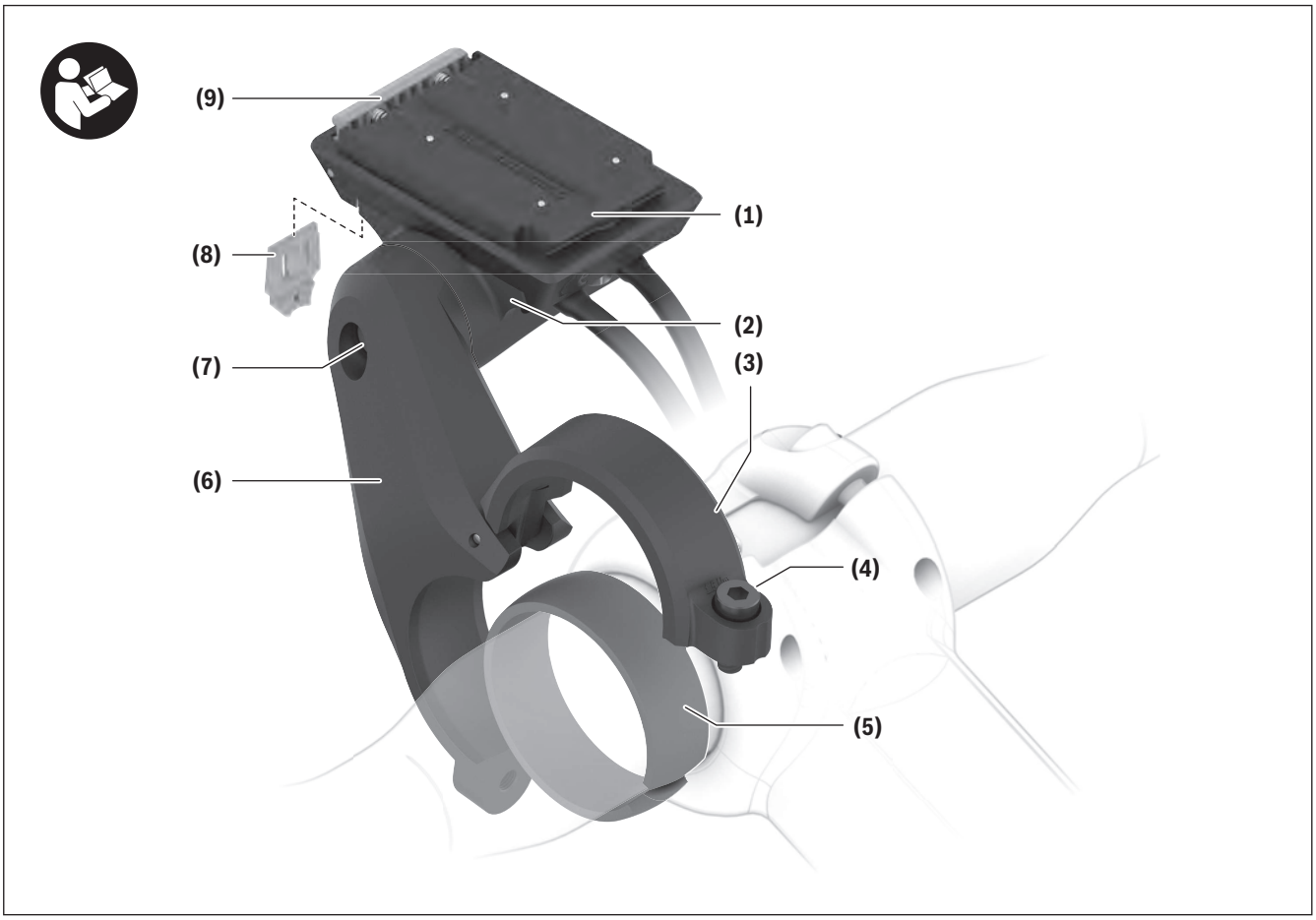

(1) Display mount
(2) Adapter tray
(3) Clamp for holder
(4) Clamp screw
(5) Round rubber spacer
(6) 1-arm socket
(7) Screw for adjusting tilt
(8) Removal blocker
(9) Snap-in hook
(10) Connection cables
(11) Fastening screws for display mount

The display mount **(1)** can also be embedded in the bicycle design.

Intended use

The display holder is intended to establish the mechanical and electrical connection to a display or onboard computer.

Only original Bosch eBike components from the system generation **the smart system** can be connected to the display holder.

A display holder is not required for an eBike to function.

Technical data

Display holder		Display Mount
Product code		BDS3210 BDS3250 BDS3620 BDS3630
Output voltage	V	4.75–5.4
Output current, max.	A	1.5
Operating temperature	°F	23 to 104
Storage temperature	°F	50 to 104
Protection rating		IP55

Fitting

Note: Do not use a ball end hex key on flat head hex screws.

Installation positions (see figure A)

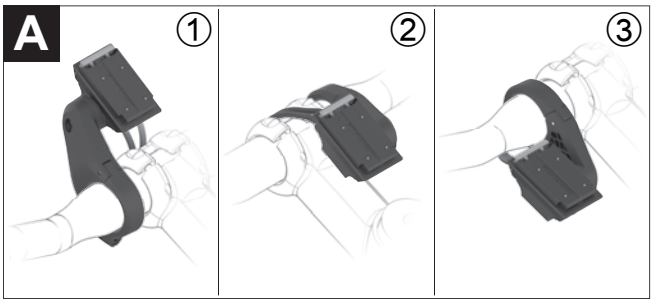

The 1-arm socket can be mounted at three different positions on the handlebars:

– In front of the handlebars ①
– Over the stem ②
– In the triangle between the stem and handlebar ③

Note: In order to ensure clean cable routing, the appropriate display mount must be used for each of the three different positions: The BDS3210 display mount for in front of the handlebars (electrical connections at the rear); the BDS3250 display mount for over the stem or in the triangle between the stem and handlebar (electrical connections at the front).

If you want to change the installation position and you have the correct display mount **(1)**, you must first remove the 1-arm socket **(6)** and re-mount it afterwards.

Note: Please be aware that there are two different handlebar diameters (31.8 mm and 35 mm). Your bicycle retailer will help you to select the correct components.

Mounting the display mount (see figure B)

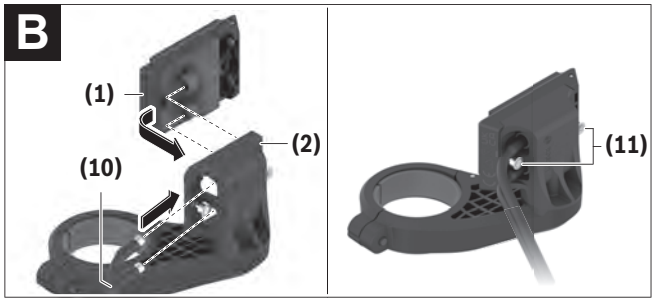

(1) Display mount
(2) Adapter tray
(10) Connection cables
(11) Fastening screw for display mount

Insert the display mount **(1)** into the adapter tray **(2)**. Ensure that it is in the required installation position. Secure the display mount **(1)** from below using the screws **(11)**. When doing so, be aware of the torque specified on the adapter tray **(2)**.

Connect the connection cables **(10)** that come out of the drive unit and the operating unit. It does not matter which cable is connected to which connection for the functions to work. When connecting the cables,

ensure that the markings on the connector and on the cable match.

Securing on the handlebars (see figure C)

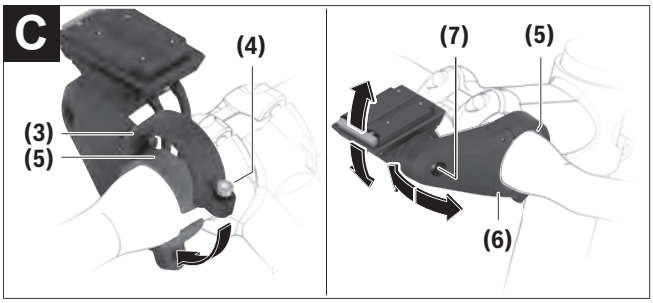

(3) Clamp for holder

(4) Clamp screw

(5) Round rubber spacer

(6) 1-arm socket

(7) Screw for adjusting tilt

Note: The display holder must only be secured in the cylindrical area of the handlebars and not in the tapered area. To align an on-board computer in the center, the handlebars must have a cylindrical area of at least 90 mm in width.

Open the clamp and bring the 1-arm socket **(6)**, together with the round rubber spacer **(5)**, into the required position. Gently tighten the clamp screw **(4)** so that the 1-arm socket **(6)** can still move.

Adjust the tilt for the display mount by loosening and tightening the screw **(7)**. Preferably adjust the tilt without the on-board computer.

In the connection between the 1-arm socket **(6)** and the adapter tray, there are interlocking teeth, which means that it is only possible to align the adapter tray in predefined positions. Before tightening the screw **(7)**, make sure that the teeth engage in one another correctly. In addition, be aware of the torque specified on the 1-arm socket **(6)**.

Bring the 1-arm socket **(6)** into its final position and tighten the clamp screw **(4)**. Be aware of the torque specified on the 1-arm socket **(6)** here too.

Thanks to the round rubber spacer **(5)**, it is possible to move the 1-arm socket **(6)** in all directions.

Removal blocker

A device attached to the display holder can be secured using the removal blocker **(8)**. Usage is described in the operating instructions for the respective device.

Maintenance and servicing

Maintenance and cleaning

The display holder must not be cleaned with pressurized water.

Use a soft cloth dampened only with water for cleaning. Do not use cleaning products of any kind.

- ▶ **Only have repairs performed by a certified bicycle dealer.**

After-sales service and advice on using products

If you have any questions about the eBike and its components, contact an authorized bicycle retailer.

For contact details of authorized bike dealerships, please visit www.bosch-ebike.com.

More information about the eBike components and their functions can be found in the Bosch eBike Help Center.

Disposal

Please return Bosch eBike components that are no longer usable, free of charge, to an authorized bicycle dealer or a recycling center.

Do not dispose of eBikes and their components with household waste.

Robert Bosch GmbH
72757 Reutlingen
Germany

www.bosch-ebike.com

0 275 U07 3S1 (2024.03) T / 26

Owner’s Manual
SmartphoneGrip

BSP3200



en Original operating instructions

This manual contains important safety, performance and service information. Read and understand it along with the information provided to you by your bicycle manufacturer before using the product, and keep it for reference.

Table of Contents

Introduction 2
About Warnings 2
General Warnings 2
Using your Manual 3
Operating your Bosch Drive System 4
Safety Instructions 4
Product description and specifications 7
Assembly 9
Operation 11
Maintenance and servicing 12
Maintenance and cleaning 12
After-sales service and advice on using products 12
Transport 12
Battery Recycling Program 12

Introduction

About Warnings

This manual contains many **DANGER**, **WARNING**, and **CAUTION** indicators concerning the consequences of failure to use, assemble, maintain, store, inspect and dispose of a Bosch-equipped eBike in a safe manner.

– The combination of the safety alert symbol and the word **DANGER** indicates a hazardous situation that, if not avoided, will result in death or serious injury.
– The combination of the safety alert symbol and the word **WARNING** indicates a hazardous situation that, if not avoided, could result in death or serious injury.
– The combination of the safety alert symbol and the word **CAUTION** indicates a hazardous situation that, if not avoided, could result in minor or moderate injury.

General Warnings



Read all safety warnings and all instructions. Failure to follow the warnings and instructions may result in death or serious injury.

Save all safety warnings and instructions for future reference.

The term **eBike battery** used in these operating instructions refers to all original Bosch eBike batteries from the system generation **the smart system**.

▶ **Read ALL accompanying manuals before riding the bike for the first time.** Your Bosch Drive System comes with additional manuals and documents provided by the manufacturer of the bicycle and other components. Failure to read and understand safety information can result in death or serious injury.

⚠ WARNING

▶ **This manual contains important safety, performance and service information.** Read it before you take the first ride on your new bicycle, and keep it for reference. The manual can also be found online at www.bosch-ebike.com.

▶ **This manual is intended to be read together with the separate user manual provided with your bicycle.** Be sure to read all provided documents including labels on the product before your first ride.

▶ **Take responsibility for your own SAFETY.** If you have any questions or do not understand something, consult with your dealer or the bicycle or component manufacturer.

▶ **Some eBike accessories may present a choking hazard to small children.** Keep these accessories away from children.

⚠ CAUTION

▶ **The Bosch Drive System adds weight to your bicycle which you may not be used to lift.** Avoid injury, use proper lifting techniques.

Using your Manual

In addition to the functions outlined here, changes to software relating to troubleshooting and functional modifications may be introduced at any time.

Graphics

The bicycle shown in this manual may differ slightly from your bicycle, but will be similar enough to help you understand our instructions.

RIGHT-HAND and LEFT-HAND sides are determined by facing in the direction the bicycle will travel when going forward. When you see a broken line (------), the item referred to is hidden from view.

Operating your Bosch Drive System

Safety Instructions



Read all the safety information and instructions. Failure to observe the safety information and follow instructions may result in electric shock, fire and/or serious injury.

Save all safety warnings and instructions for future reference.

The term **eBike battery** used in these operating instructions refers to all original Bosch eBike batteries from the system generation **the smart system**.

The terms **drive** and **drive unit** used in these operating instructions refer to all original Bosch drive units from the system generation **the smart system**.

- ▸ **Read and observe the safety warnings and instructions in all operating instructions of the eBike components and your eBike.**
- ▸ **Do not allow your attention to be diverted from surrounding traffic when using Bosch eBike components and always ride with both hands on the handlebars. Always observe the applicable legal provisions in your country for the permitted use of your eBike in road traffic. In particular, note that it is prohibited to pick up or hold your smartphone in your hand while cycling on public streets.**
- ▸ **Set the smartphone brightness so that you can adequately see important information such as speed and warning symbols.** Incorrectly set brightness may lead to dangerous situations.
- ▸ **The contact surfaces of the display holder may become very hot (> 140 °F). Allow the contact surfaces to adjust to the ambient temperature before you touch them.** This is particularly important when using a SmartphoneGrip.
- ▸ **Consult a doctor before using fitness app programs.** Fitness apps may cause people to overexert themselves physically.
- ▸ **Always observe local restrictions for using electronic devices.**
- ▸ **Avoid using the device in close proximity to your body over an extended period of time.**
- ▸ **Do not stand your eBike upside down on its saddle and handlebars if the SmartphoneGrip or its holder protrude from the handlebars.** This may irreparably damage the SmartphoneGrip or the holder.
- ▸ **Do not use the SmartphoneGrip as a handle.** Lifting the eBike up by the SmartphoneGrip can cause irreparable damage to the SmartphoneGrip.
- ▸ **Do not open the SmartphoneGrip.** Opening the SmartphoneGrip can result in irreparable damage and void your warranty.
- ▸ **Caution!** Using the SmartphoneGrip with *Bluetooth*® and/or Wi-Fi can interfere with the operation of other devices and systems, including airplanes and medical devices (e.g. pacemakers, hearing aids). Similarly, the possibility that this may cause damage to humans and animals in the immediate vicinity cannot be completely excluded. Do not use the SmartphoneGrip with *Bluetooth*® in the vicinity of medical devices, service stations, chemical plants, blasting areas or other areas where there is a risk of explosion. Do not use the SmartphoneGrip with *Bluetooth*® in airplanes. Avoid using the device in close proximity to your body over an extended period of time.
- ▸ The *Bluetooth*® wordmark and its logos are the registered trademarks and property of Bluetooth SIG, Inc. Any use of this wordmark/these logos by Robert Bosch GmbH, Bosch eBike Systems is under license.
- ▸ **Do not enter information or make selections while riding.** Interacting with the display or remote control while riding can lead to accidents causing serious injury or death. You must observe road and

traffic conditions, and comply with traffic laws at all times.

- **Using your mobile device while operating an eBike may be distracting. Distracted driving is a serious safety concern and can lead to accidents causing serious injury or death. In order to prevent distracted driving, most devices come equipped with a "Do Not Disturb" mode. The "Do Not Disturb" mode should be used while operating an eBike.** Please consult your device-specific instructions for more information. You, as the eBike operator, are fully responsible for ensuring that you pay attention to road conditions and comply with traffic laws at all times.
- Please note that certain State or local laws may require that class III eBikes must be equipped with a functioning speedometer that displays speed in miles per hour. Riders must be aware of any and all applicable rules and regulations related to the operation or use of class III eBikes in any applicable jurisdictions before operating or otherwise using this product.
- **Choose the USB charging cable length appropriately.** USB charging cable length must not be long enough to catch in handlebar or front wheel. This is important to prevent personal injury.

NOTICE: This device complies with part 15 of the FCC Rules. Operation is subject to the following two conditions:

1. This device must not cause harmful interference, and
2. this device must accept any interference received, including interference that may cause undesired operation.

NOTICE: Changes or modifications made to this equipment not expressly approved by the Robert Bosch GmbH may void the FCC authorization to operate this equipment.

NOTE: This equipment has been tested and found to comply with the limits for a Class B digital device, pursuant to Part 15 of the FCC Rules. These limits are designed to provide reasonable protection against harmful interference in a residential installation. This equipment generates, uses and can radiate radio frequency energy and, if not installed and used in accordance with the instructions, may cause harmful interference to radio communications. However, there is no guarantee that interference will not occur in a particular installation. If this equipment does cause harmful interference to radio or television reception, which can be determined by turning the equipment off and on, the user is encouraged to try to correct the interference by one or more of the following measures:

- Reorient or relocate the receiving antenna.
- Increase the separation between the equipment and receiver.
- Connect the equipment into an outlet on a circuit different from that to which the receiver is connected.
- Consult the dealer or an experienced radio/TV technician for help.

Radiofrequency radiation exposure Information:
The radiated output power of the device is far below the FCC radio frequency exposure limits. Nevertheless, the device shall be used in such a manner that the potential for human contact during normal operation is minimized.

This equipment complies with FCC radiation exposure limits set forth for an uncontrolled environment. This equipment should be installed and operated with minimum distance of 20 cm between the radiator and your body. This transmitter must not be co-located or operating in conjunction with any other antenna or transmitter.

ISED Notice (Canada)

This device contains licence-exempt transmitter(s)/ receiver(s) that comply with Innovation, Science and Economic Development Canada's licence-exempt RSS(s). Operation is subject to the following two conditions:

1. this device may not cause interference, and

2. this device must accept any interference, including interference that may cause undesired operation of the device.

This equipment complies with Canada radiation exposure limits set forth for an uncontrolled environment. This equipment should be installed and operated with minimum distance of 20 cm between the radiator and your body. This transmitter must not be co-located or operating in conjunction with any other antenna or transmitter.

Product description and specifications

Product Features

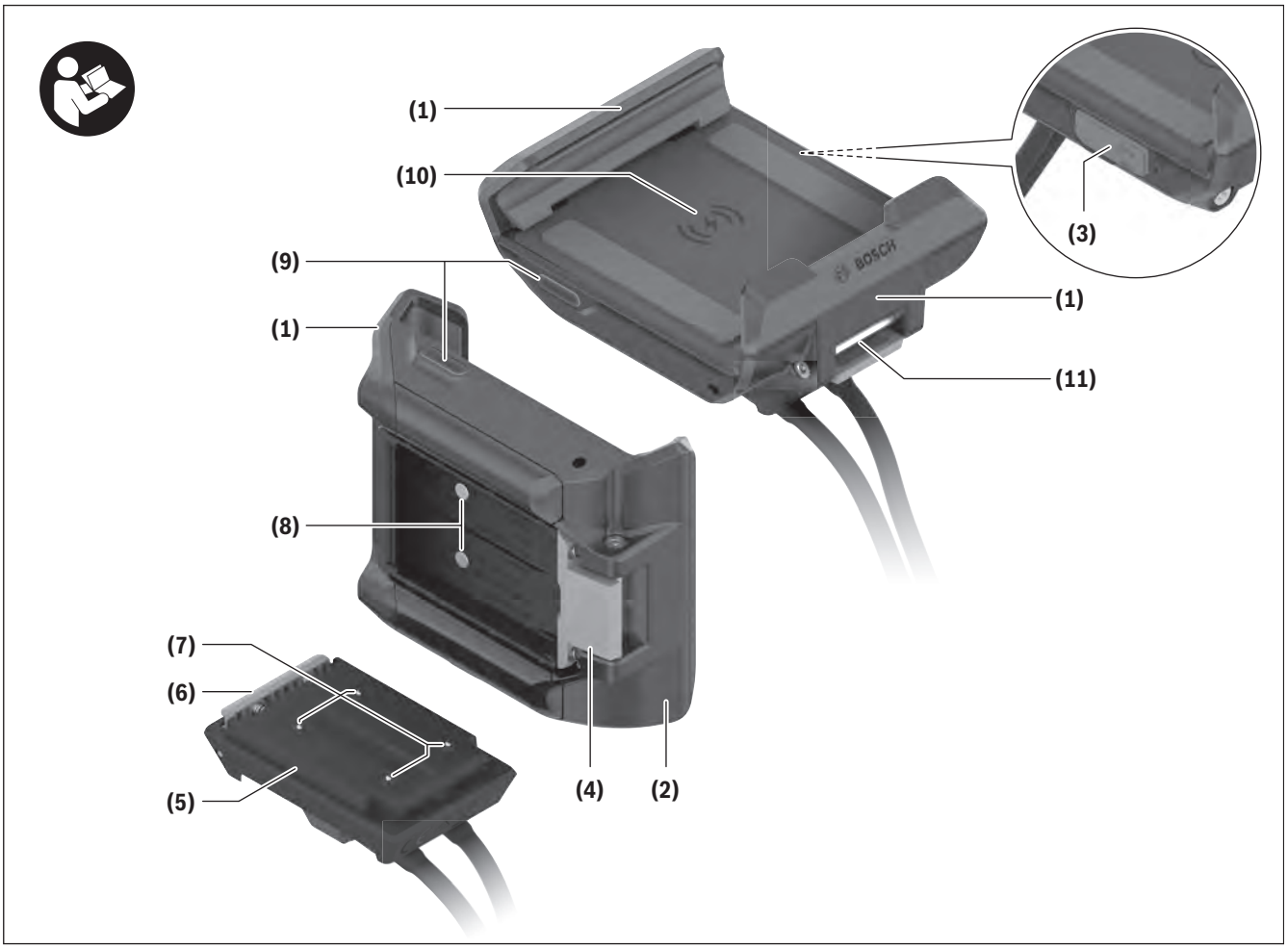

All illustrations of bike parts except for the drive unit, SmartphoneGrip including operating unit, speed sensor and the corresponding holders are schematic and may differ on your eBike.

(1) Front retraining bracket, movable
(2) Rear retaining bracket, fixed
(3) USB port with USB cap
(4) Release mechanism
(5) SmartphoneGrip mount
(6) Snap-in hook
(7) Socket contacts
(8) SmartphoneGrip contacts
(9) Status LED
(10) Inductive charging coil
(11) Keypad lock
(12) Hex key[a)]
(13) Smartphone[a)]

a) Not included in the scope of delivery

Intended Use

The Bosch SmartphoneGrip is designed to hold and charge a smartphone on the handlebars of a Bosch eBike from the system generation **the smart system**.

In addition to the functions outlined here, changes to software relating to troubleshooting and functional modifications may be introduced at any time.

The SmartphoneGrip is suitable for cycling on reinforced paths without jumps and with few ledges (< 15 cm) at average speeds of between 9 and 15 mph, for example on asphalt roads, country paths, paths reinforced with gravel or sand, and reinforced woodland paths.

In case of improper use, there is a risk of the smartphone coming loose from the SmartphoneGrip, falling down and becoming damaged as a result. There is also a considerable risk of an accident if the smartphone falls out.

Technical Data

Smartphone holder		SmartphoneGrip
Product code		BSP3200
Charging capacity via USB port	W	5 W (1 A at 5 V)
Inductive charging capacity	W	7.5 W (1,5 A at 5 V) Efficiency > 67 %
Operating temperature	°F	23 to 104
Storage temperature	°F	50 to 104
Protection rating		IP55
Weight, approx.	lb	0.2

Assembly

SmartphoneGrip Assembly

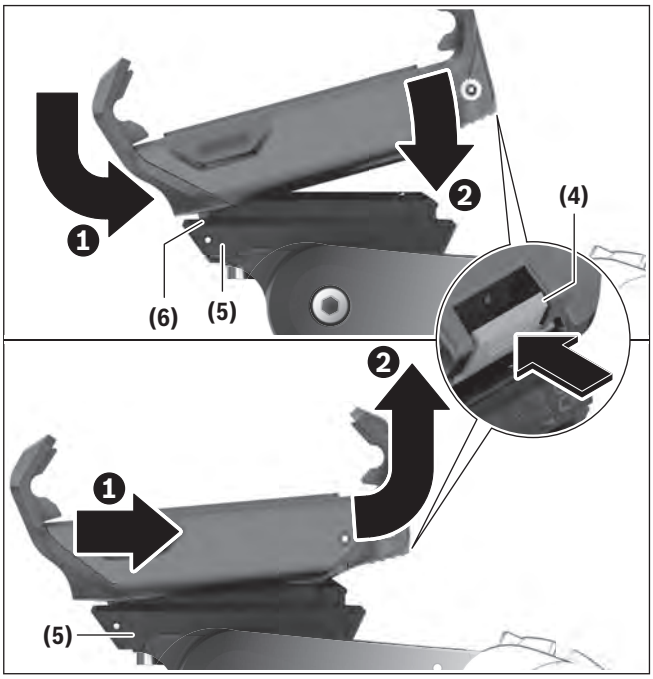

Press and hold the release mechanism **(4)** to **position** the SmartphoneGrip. Place the upper edge of the SmartphoneGrip next to the snap-in hook **(6)** of the SmartphoneGrip mount **(5)** ❶. Pull the SmartphoneGrip towards you and push the SmartphoneGrip onto the SmartphoneGrip mount ❷. Let go of the release mechanism **(4)**.

Press the release mechanism **(4)** while pulling it towards you ❶ to **remove** the SmartphoneGrip. Lift off the SmartphoneGrip and release the release mechanism **(4)** ❷.

Smartphone Assembly

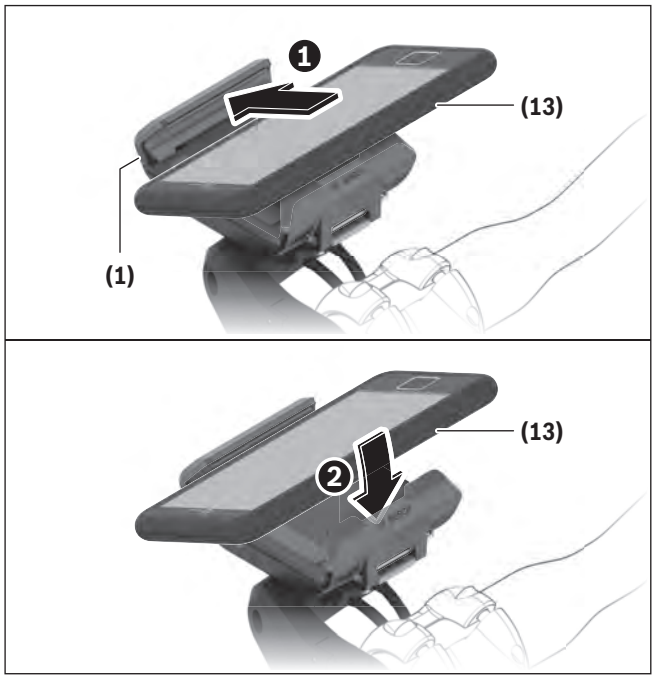

The SmartphoneGrip can hold smartphones in the following sizes:

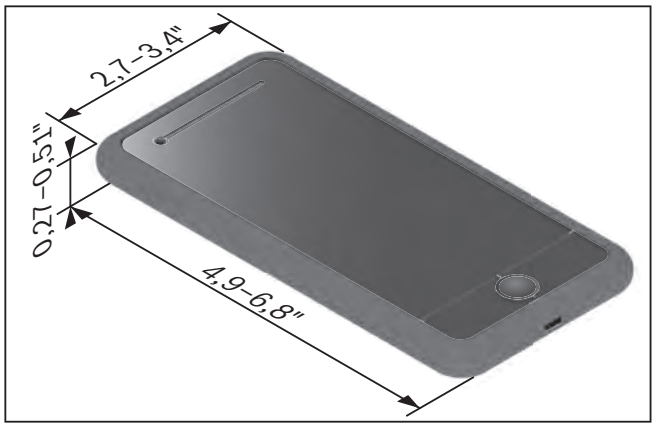

The specified dimensions include any phone cases. Smartphones with **folio and carrying cases** must not be used.

The total weight must not exceed 0.608 lbs.

Insert your smartphone **(13)** with the long side of the phone positioned at the center against the movable retaining bracket **(1)**. Press the smartphone **(13)** against the movable retaining bracket **(1)** with both

hands ❶ and place your smartphone **(13)** in the SmartphoneGrip ❷.

- ▶ Be careful not to pinch your fingers between the movable retaining bracket and the SmartphoneGrip when inserting your smartphone.

Once you have inserted your smartphone, check that the smartphone cannot come into contact with any hard parts on the bike even in case of vibrations, as this could cause lasting damage to the smartphone.

Keypad Lock Assembly

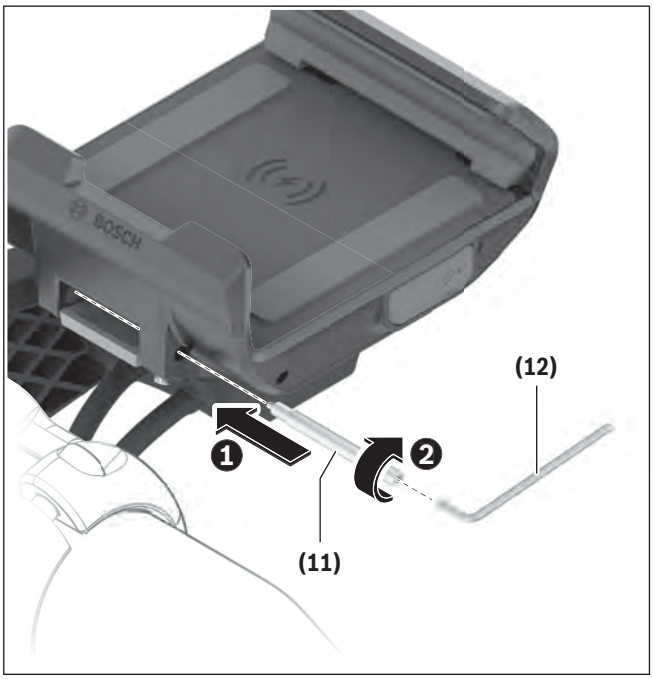

Note: Do not use a ball end hex key on flat head hex screws.

The keypad lock **(11)** supplied prevents the SmartphoneGrip from being quickly and easily removed by blocking the release mechanism **(4)**.

To **insert** the keypad lock **(11)**, slide the keypad lock **(11)** into the provided opening ❶ and carefully screw it into place with a hex key (1.5 mm) **(12)** ❷.

Note: The keypad lock is not an anti-theft device. The keypad lock prevents the SmartphoneGrip from being quickly removed from the holder. The keypad lock does not affect the smartphone in any way.

Note: Never leave your smartphone unattended in the SmartphoneGrip.

To **remove** the keypad lock **(11)**, unscrew it with a hex key (1.5 mm) **(12)** and remove the keypad lock **(11)**.

Operation

Start-up

Put the smartphone in the SmartphoneGrip.

Load the **eBike Flow** app to show your ride data.



Depending on the operating system of the smartphone, the **eBike Flow** app can be downloaded free of charge from the Apple App Store or Google Play Store.

Scan the code with your smartphone to download the **eBike Flow** app.

Charging the Smartphone

While the smartphone is in the SmartphoneGrip, it can be charged at the same time as displaying riding data. If your smartphone has an inductive charging function, you can charge the smartphone without needing a cable.

Inductive Charging

The charging process starts automatically when you place a smartphone with an inductive charging function in the SmartphoneGrip. The status LED **(9)** lights up yellow. When the smartphone is fully charged, the status LED **(9)** will light up green permanently.

The charging voltage is switched off when you remove the smartphone from the holder.

Charging via USB

If your smartphone does not have an inductive charging function, you can charge your smartphone via the USB port **(3)**. To do so, open the USB cap and connect a separate USB cable (not included in the scope of delivery) to the Micro-A/B USB port.

Pay attention to the type of plug required for your smartphone when purchasing the USB cable.

Note: If the eBike battery reaches a state of charge of 0 %, remove any loads that may be present (e.g. smartphone).

Status Indicators

The status LED **(9)** indicates the following statuses with different colors and lighting patterns.

Status	Behavior
Charging via USB	LED lights up blue.
Inductive charging starts	LED flashes yellow 3 times.
Inductive Charging	LED lights up yellow.
Fully charged	LED lights up green.
Error message	LED flashes red.

The following alarm states are detected and will lead to the inductive charging process being interrupted:

- Detection of foreign objects, e.g. coins, keys and other metallic objects
- Temperature alarm
  If the SmartphoneGrip is outside of the operating temperature range, the status LED **(9)** will light up red and the charging process is interrupted. The charging process will resume as soon as the SmartphoneGrip is back within the operating temperature range.
- Overvoltage alarm at voltages above 6 V
- Undervoltage alarm at voltages below 4.2 V

Maintenance and servicing

Maintenance and cleaning

Use a soft cloth dampened only with water for cleaning. Do not use cleaning products of any kind.

- **Only have repairs performed by a certified bicycle dealer.**

Do not clean any of the components with pressurized water.

After-sales service and advice on using products

If you have any questions about the eBike and its components, contact an authorized bicycle retailer.

For contact details of authorized bike dealerships, please visit www.bosch-ebike.com.

More information about the eBike components and their functions can be found in the Bosch eBike Help Center.

Transport

- **If you transport your eBike attached to the outside of your car, e.g. on a bike rack, remove the SmartphoneGrip and the eBike battery (exception: built-in eBike battery) to avoid damaging them.**

Battery Recycling Program



The drive unit, on-board computer incl. operating unit, eBike battery, speed sensor, accessories and packaging should be disposed of in an environmentally correct manner.

Do not dispose of eBikes and their components with household waste.



You may recycle your Bosch battery pack by calling 1.800.822.8837.

Robert Bosch GmbH
72757 Reutlingen
Germany

www.bosch-ebike.com

0 275 U08 3SG (2024.03) T / 38

Owner’s Manual
System Controller | Mini Remote | Mini Remote Dropbar

BRC3100 | BRC3300 | BRC3310



en Original operating instructions

This manual contains important safety, performance and service information. Read and understand it along with the information provided to you by your bicycle manufacturer before using the product, and keep it for reference.

Table of Contents

Introduction 2
About Warnings 2
General Warnings 2
Using your Manual 3
Operating the Control Unit 4
Safety Instructions 4
Product description and specifications 7
Operation 10
Establishing a Smartphone Connection with the System Controller 13
Connecting the System Controller to the Mini Remote/Mini Remote Dropbar 15
Troubleshooting 16
Maintenance and Service 17
Maintenance/cleaning 17
After-sales service and advice on using products 17
Battery Recycling Program 17

Introduction

About Warnings

This manual contains many **DANGER**, **WARNING**, and **CAUTION** indicators concerning the consequences of failure to use, assemble, maintain, store, inspect and dispose of a Bosch-equipped eBike in a safe manner.

– The combination of the safety alert symbol and the word **DANGER** indicates a hazardous situation that, if not avoided, will result in death or serious injury.
– The combination of the safety alert symbol and the word **WARNING** indicates a hazardous situation that, if not avoided, could result in death or serious injury.
– The combination of the safety alert symbol and the word **CAUTION** indicates a hazardous situation that, if not avoided, could result in minor or moderate injury.

General Warnings



Read all safety warnings and all instructions. Failure to follow the warnings and instructions may result in death or serious injury.

Save all safety warnings and instructions for future reference.

The term **eBike battery** used in these operating instructions refers to all original Bosch eBike batteries from the system generation **the smart system**.

▶ **Read ALL accompanying manuals before riding the bike for the first time.** Your Bosch Drive System comes with additional manuals and documents provided by the manufacturer of the bicycle and other components. Failure to read and understand safety information can result in death or serious injury.

⚠ WARNING

▶ **This manual contains important safety, performance and service information.** Read it before you take the first ride on your new bicycle, and keep it for reference. The manual can also be found online at www.bosch-ebike.com.

▶ **This manual is intended to be read together with the separate user manual provided with your bicycle.** Be sure to read all provided documents including labels on the product before your first ride.

▶ **Take responsibility for your own SAFETY.** If you have any questions or do not understand something, consult with your dealer or the bicycle or component manufacturer.

▶ **Some eBike accessories may present a choking hazard to small children.** Keep these accessories away from children.

⚠ CAUTION

▶ **The Bosch Drive System adds weight to your bicycle which you may not be used to lift.** Avoid injury, use proper lifting techniques.

Using your Manual

In addition to the functions outlined here, changes to software relating to troubleshooting and functional modifications may be introduced at any time.

Graphics

The bicycle shown in this manual may differ slightly from your bicycle, but will be similar enough to help you understand our instructions.

RIGHT-HAND and LEFT-HAND sides are determined by facing in the direction the bicycle will travel when going forward. When you see a broken line (------), the item referred to is hidden from view.

Operating the Control Unit

Safety Instructions



Read all the safety and general instructions. Failure to follow the warnings and instructions may result in electric shock, fire and/or serious injury.

Save all safety warnings and instructions for future reference.

The term **eBike battery** used in these operating instructions refers to all original Bosch eBike batteries from the system generation **the smart system**.

The terms **drive** and **drive unit** used in these operating instructions refer to all original Bosch drive units from the system generation **the smart system**.

- ▶ **Read and observe the safety warnings and instructions in all operating instructions of the eBike components and your eBike.**
- ▶ **Do not allow yourself to be distracted by the operating unit's display, particularly by text overlays shown according to the situation.** The display of riding information does not absolve the rider of the need to exercise due caution. If you do not focus exclusively on the traffic, you risk being involved in an accident. If you want to change settings on your operating unit, beyond just changing the riding mode, stop cycling to do so.
- ▶ **Do not attempt to attach the on-board computer or the operating unit while riding!**
- ▶ **Do not enter information or make selections while riding.** Interacting with the display or remote control while riding can lead to accidents causing serious injury or death. You must observe road and traffic conditions, and comply with traffic laws at all times.
- ▶ **The push assistance function must only be used when pushing the eBike.** There is a risk of injury if the wheels of the eBike are not in contact with the ground while using the push assistance.
- ▶ **When the push assistance is activated, the pedals may turn at the same time.** When the push assistance function is activated, make sure that there is enough space between your legs and the turning pedals to avoid the risk of injury.
- ▶ **When using the push assistance, ensure that you can always control the eBike and hold it securely.** The push assistance can be suspended under certain conditions (e.g. obstacle on the pedal or accidentally slipping off the button of the operating unit). The eBike can suddenly move backwards towards you or start to tip. This poses a particular risk for the user if there is an additional load. When using the push assistance on the eBike, do not place the eBike in situations in which you cannot hold the eBike by yourself.
- ▶ **Do not stand your eBike upside down on its handlebars and saddle if the operating unit or its holder protrude from the handlebars.** This may irreparably damage the operating unit or the holder.
- ▶ **Do not connect a charger to the eBike battery if the display of the operating unit or the on-board computer indicates that a critical error has occurred.** This may result in damage to your eBike battery. The eBike battery may catch fire, thereby resulting in serious burns and other injuries.
- ▶ **The control unit features a wireless interface. Local operating restrictions, e.g. in airplanes or hospitals, must be adhered to.**
- ▶ **Caution!** When using the operating unit with *Bluetooth*®, this may cause interference that affects other devices and systems, airplanes and medical devices (e.g. pacemakers, hearing aids). Similarly, the possibility that this may cause damage to humans and animals in the immediate vicinity cannot be completely excluded. Do not use the operating unit with *Bluetooth*® in the vicinity of medical de-

vices, gas stations, chemical plants, areas with a potentially explosive atmosphere or on blast sites. Do not use the operating unit with *Bluetooth*® in airplanes. Avoid using the device in close proximity to your body over an extended period of time.

- The *Bluetooth*® wordmark and its logos are the registered trademarks and property of Bluetooth SIG, Inc. Any use of this wordmark/these logos by Robert Bosch GmbH, Bosch eBike Systems is under license.
- Before using the System Controller while riding, make sure to familiarize yourself with System Controller controls and functions by reviewing the operating instructions in this user manual. Practice riding under traffic-free conditions and make sure that you are comfortable using the System Controller before using it in traffic.
- Do not use the System Controller while riding if you are not comfortable doing so. Do not allow yourself to be distracted by the System Controller. Please note that distracted riding can lead to serious injury, up to and including death. Riders must observe road and traffic conditions and comply with all applicable traffic laws at all times.
- Please note that certain State or local laws may require that class III eBikes must be equipped with a functioning speedometer that displays speed in miles per hour. Riders must be aware of any and all applicable rules and regulations related to the operation or use of class III eBikes in any applicable jurisdictions before operating or otherwise using this product.

Safety instructions for button/coin cells



⚠ WARNING

INGESTION HAZARD:
This product contains a button cell or coin battery.
DEATH or serious injury can occur if ingested.
A swallowed button cell or coin battery can cause **Internal Chemical Burns** in as little as **2 hours**.
KEEP new and used batteries **OUT OF REACH of CHILDREN**.
Seek immediate medical attention if a battery is suspected to be swallowed or inserted inside any part of the body.
Remove and immediately recycle or dispose of used batteries according to local regulations and keep away from children. Do NOT dispose of batteries in household trash or incinerate.
Even used batteries may cause severe injury or death. Call a local poison control center for treatment information.
Non-rechargeable batteries are not to be recharged. Do not force discharge, recharge, disassemble, heat above 104 °F (40 °C) or incinerate. Doing so may result in injury due to venting, leakage or explosion resulting in chemical burns.
Ensure the batteries are installed correctly according to polarity (+ and −).
Do not mix old and new batteries, different brands or types of batteries, such as alkaline, carbon-zinc, or rechargeable batteries.
Remove and immediately recycle or dispose of batteries from equipment not used for an extended period of time according to local regulations.
Always completely secure the battery compartment. If the battery compartment does not close securely, stop using the product, remove the batteries, and keep them away from children.

- **Only use the button/coin cells listed in this operating manual.** Do not use any other button/coin cells or other forms of electrical power supply.
- **Do not damage the button/coin cell and or take the button/coin cell apart.** The button/coin cell may leak, explode, catch fire and cause personal injury.
- **Do not allow damaged button/coin cells to come into contact with water.** Leaking lithium may mix with water to create hydrogen, which could cause a fire, an explosion, or personal injury.

NOTICE: This device complies with part 15 of the FCC Rules. Operation is subject to the following two conditions:

1. This device must not cause harmful interference, and
2. this device must accept any interference received, including interference that may cause undesired operation.

NOTICE: Changes or modifications made to this equipment not expressly approved by the Robert Bosch GmbH may void the FCC authorization to operate this equipment.

NOTE: This equipment has been tested and found to comply with the limits for a Class B digital device, pursuant to Part 15 of the FCC Rules. These limits are designed to provide reasonable protection against harmful interference in a residential installation. This equipment generates, uses and can radiate radio frequency energy and, if not installed and used in accordance with the instructions, may cause harmful interference to radio communications. However, there is no guarantee that interference will not occur in a particular installation. If this equipment does cause harmful interference to radio or television reception, which can be determined by turning the equipment off and on, the user is encouraged to try to correct the interference by one or more of the following measures:

– Reorient or relocate the receiving antenna.
– Increase the separation between the equipment and receiver.
– Connect the equipment into an outlet on a circuit different from that to which the receiver is connected.
– Consult the dealer or an experienced radio/TV technician for help.

Radiofrequency radiation exposure Information:
The radiated output power of the device is far below the FCC radio frequency exposure limits. Nevertheless, the device shall be used in such a manner that the potential for human contact during normal operation is minimized.

This equipment complies with FCC radiation exposure limits set forth for an uncontrolled environment. This transmitter must not be co-located or operating in conjunction with any other antenna or transmitter.

ISED Notice (Canada)

This device contains licence-exempt transmitter(s)/ receiver(s) that comply with Innovation, Science and Economic Development Canada's licence-exempt RSS(s). Operation is subject to the following two conditions:

1. this device may not cause interference, and
2. this device must accept any interference, including interference that may cause undesired operation of the device.

This equipment complies with Canada radiation exposure limits set forth for an uncontrolled environment. This transmitter must not be co-located or operating in conjunction with any other antenna or transmitter.

Privacy notice

When connecting the eBike to the **Bosch Diagnostic-Tool 3** or when exchanging eBike components, technical information about your eBike (e.g. manufacturer, model, bike ID, configuration data) as well as regarding the use of the eBike (e.g. total travel time, energy consumption, temperature) is transmitted to Bosch eBike Systems (Robert Bosch GmbH) for processing your request, in service cases and for the purposes of product improvement. More information on data processing can be found at www.bosch-ebike.com/privacy-full.

Product description and specifications

Product Features

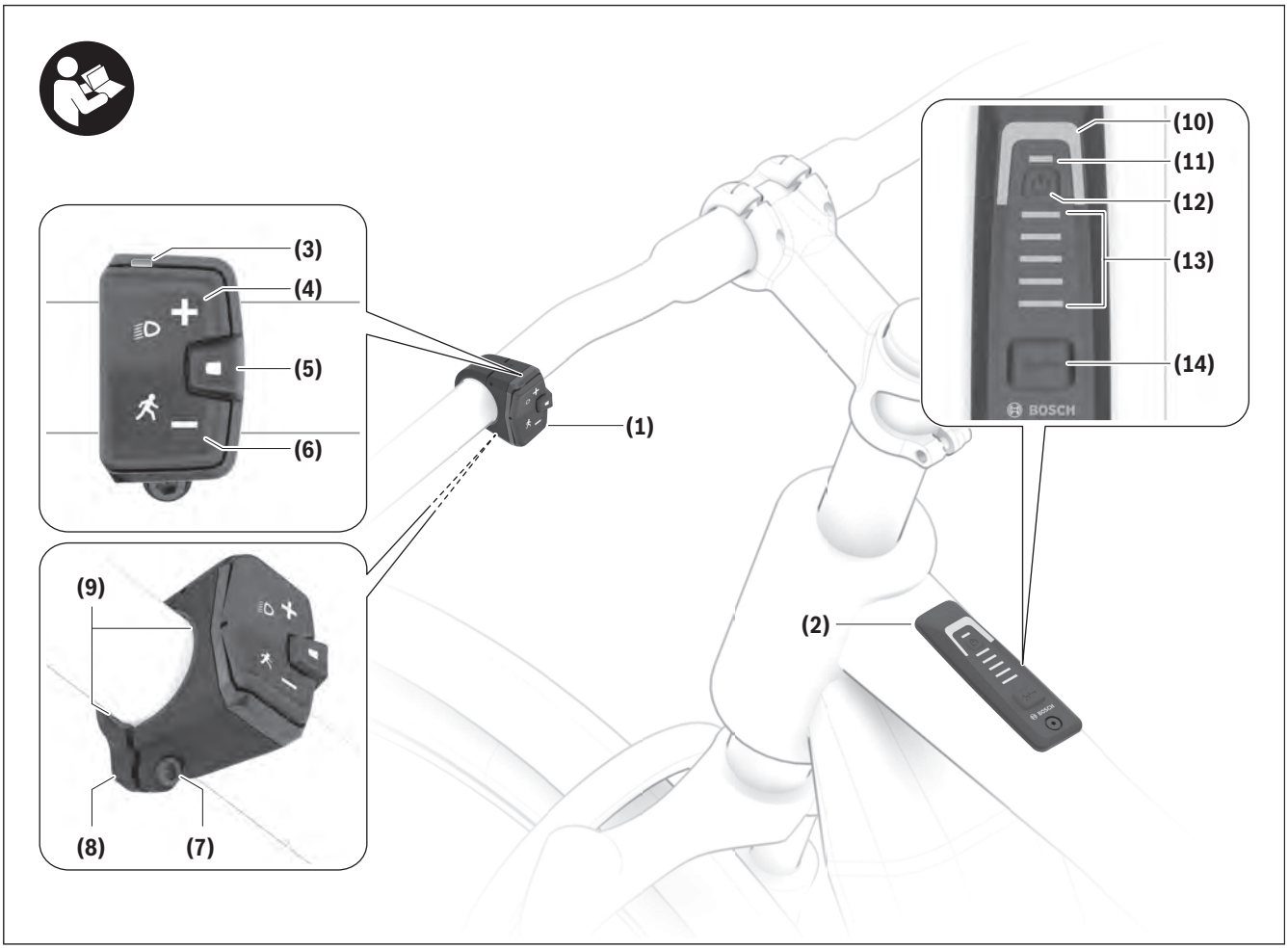

All illustrations of bike parts except for the drive unit, on-board computer including operating unit, speed sensor and the corresponding holders are schematic and may differ on your eBike.

(1) Operating unit **Mini Remote/Mini Remote Dropbar**

(2) Operating unit **System Controller**

(3) LED indicator lamp

(4) Button for increasing the assistance level **+**/ bicycle lights

(5) Select button

(6) Button for reducing the assistance level **–**/ walk assistance

(7) Fastening screw for holder

(8) Holder

(9) Rubber insert/battery holder

(10) Riding mode LED

(11) ABS LED (optional)/ambient light sensor

(12) On/off button

(13) Battery charge indicator of eBike battery

(14) Mode button

Intended Use

The **System Controller** and **Mini Remote/Mini Remote Dropbar** operating units are designed for controlling an eBike/on-board computer from the system generation **the smart system**. You can also use them to control the **eBike Flow** app.

In order to be able to use the control unit to its fullest extent, a compatible smartphone with the **eBike Flow** app is required.

Using the **eBike Flow** app, a *Bluetooth*® connection can be established between the smartphone and the eBike, between the smartphone and **System Controller**, and between **System Controller** and **Mini Remote/Mini Remote Dropbar**.



Depending on the operating system of the smartphone, the **eBike Flow** app can be downloaded free of charge from the Apple App Store or Google Play Store.

Scan the code with your smartphone to download the **eBike Flow** app.

Technical Data

Control unit		System Controller
Product code		BRC3100
Operating temperature	°F	23 to 104
Storage temperature	°F	50 to 104
Protection rating		IP55
Dimensions	in	3.5 × 1.1 × 1.1
Weight	lb	0.08
Bluetooth® Low Energy 5.0		
– Frequency	MHz	2400–2480
– Transmission power	mW	≤ 1

Control unit		Mini Remote	Mini Remote Dropbar
Product code		BRC3300	BRC3310
Operating temperature	°F	23 to 104	23 to 104
Storage temperature	°F	50 to 104	50 to 104
Battery		3 V, 1× CR1620	3 V, 1× CR1620
Protection rating		IP55	IP55
Dimensions	in	1.6 × 1.5 × 0.9	2.0 × 1.8 × 0.9
Weight	lb	0.08	0.04
Bluetooth® Low Energy 5.0			
– Frequency	MHz	2400–2480	2400–2480
– Transmission power	mW	≤ 1.9	≤ 1.9

The license information for the product is available at the following Internet address: www.bosch-ebike.com/licences

FCC ID: 2AWRC-BRC3300
IC: 26294-BRC3300
HVIN: BRC3300/BRC3310

Operation

Requirements

The eBike can then only be switched on when the following requirements are met:

– A sufficiently charged eBike battery is inserted (see operating instructions for the eBike battery from the system generation **the smart system**).
– The speed sensor is connected properly (see operating instructions for the drive unit from the system generation **the smart system**).

Note: All screenshots showing the display and text are from the approved software version. The display, text and/or functions may change following a software update.

Operating unit power supply (System Controller)

If a sufficiently charged eBike battery is inserted into the eBike and the eBike is switched on, the internal battery of the operating unit is powered and charged.

Please contact your bicycle dealer if the internal battery of the operating unit is defective.

Operating Unit (Mini Remote/Mini Remote Dropbar) Power Supply

The **Mini Remote/Mini Remote Dropbar** operating unit is supplied with energy by a CR1620 coin cell.

Replacing the Coin Cell (Mini Remote/Mini Remote Dropbar)

If the coin cell in the **Mini Remote/Mini Remote Dropbar (1)** operating unit is low, the LED indicator light **(3)** flashes orange.

To replace the coin cell, remove the **Mini Remote/Mini Remote Dropbar** operating unit from the handlebars. Remove the rubber insert **(9)**. Remove the used coin cell and insert a new CR1620 battery in the battery holder. Close the battery compartment by the rubber insert **(9)**. Check that the rubber insert **(9)** is correctly inserted to ensure the battery compartment is fully sealed. If the coin cell is correctly inserted, the LED indicator light **(3)** flashes green. Then secure the **Mini Remote/Mini Remote Dropbar** operating unit back onto the handlebars.

Note: Carefully tighten the fastening screw **(7)** (0.6 Nm).

Note: The connection to the **System Controller** is not interrupted when the coin cell is replaced.

You can obtain the coin cells recommended by Bosch from your bicycle retailer.

Switching the eBike on/off

To **switch on** the eBike, briefly press the on/off button **(12)**. After the starting animation, the state of charge of the eBike battery is displayed in color with the battery charge indicator **(13)** and the set riding mode with the **(10)** display. The eBike is ready to ride.

The display brightness is controlled by the ambient light sensor **(11)**. Therefore, do not cover the ambient light sensor **(11)**.

The drive is activated as soon as you start pedaling (except in the **OFF** riding mode). The drive power varies depending on the riding mode set.

As soon as you stop pedaling when in normal operation, or as soon as you have reached a speed of **20/28 mph**, the drive switches off the assistance. The drive is automatically re-activated as soon you start pedaling again and the speed is below **20/28 mph**.

To **switch off** the eBike, briefly press the on/off button **(12)** (< 3 s). The battery charge indicator of the eBike battery **(13)** and the riding mode LED **(10)** go out.

If no power is requested from the drive for approx. **10** minutes (e.g. due to the eBike being stationary) and no button is pressed, the eBike switches off automatically.

Battery charge indicator of the eBike battery

In the battery charge indicator of the eBike battery **(13)**, each ice-blue bar represents 20 % capacity

and each white bar represents 10 % capacity. The topmost bar shows the maximum capacity.

Example: Four ice-blue bars and one white bar are displayed. The state of charge is between 81 % and 90 %.

If capacity is low, both of the lower displays change color:

Bar	Capacity
2 × orange	30 % to 21 %
1 × orange	20 % to 11 %
1 × red	10 % to reserve
1 × red flashing	Reserve to empty

If the eBike battery is being charged, the topmost bar on the battery charge indicator of the eBike battery **(13)** flashes.

Outside of the eBike, the eBike battery's state of charge is indicated by the LEDs on the eBike battery.

Selecting the Riding Mode

On the operating unit, you can set the level of assistance you want the drive to provide you with while pedaling.

Mini Remote/Mini Remote Dropbar: Briefly press (< 1 s) the buttons to increase the assistance level **+ (4)** or to decrease the assistance level **– (6)** in order to increase or decrease the assistance accordingly.

System Controller: Briefly press (< 1 s) the mode button **(14)** to increase the assistance.

Press the mode button **(14)** for longer than 1 s to decrease the assistance.

The riding mode can be changed even while cycling, and is displayed in color.

Riding mode	Notes
OFF	Drive assistance is switched off. The eBike can just be moved by pedaling, as with a normal bicycle.
ECO	Effective assistance with maximum efficiency, for maximum range
ECO+	Range-optimized riding mode that only switches on the drive assistance above a certain rider performance; for normal riding and for a maximum range
TOUR	Steady assistance, long range for touring
TOUR+	Dynamic assistance for normal riding and biking sports
eMTB	Optimal assistance whatever the terrain, rapid acceleration when starting from a standstill, improved dynamics and top performance
SPORT	Powerful assistance, for mountain biking and for cycling in urban traffic
TURBO	Maximum assistance even at a high cadence, for biking sports
AUTO	The assistance is dynamically adapted to the riding situation.
RACE	Maximum assistance on the eMTB racetrack; very direct response and maximum "Extended Boost" for the best possible performance in competitive situations
CARGO	Steady, powerful assistance for safely transporting heavy weights
SPRINT	Dynamic assistance according to cadence – for athletic eGravel and eRoad cycling with rapid sprints and frequent ascents

The designations and configuration of the riding modes can be preconfigured by the manufacturer and selected by the bicycle retailer.

Note: The available riding modes depend on the respective drive unit.

Adjusting the Riding Mode

The riding modes can be adapted within certain limits using the **eBike Flow** app. This gives you the option of adjusting your eBike to your personal requirements.

It is not possible to create a completely new riding mode. You can only adjust the riding modes that have

been enabled by the manufacturer or dealer on your system. This may be fewer than four riding modes.

In addition, restrictions in your country may mean that it is not possible to adjust a particular riding mode.

The following parameters are available for making adjustments:

– Assistance in relation to the base value of the riding mode (within the legal requirements)
– Drive response
– Top limit speed (within the legal requirements)
– Maximum torque (within the limits of the drive)

Note: Please ensure that your modified riding mode retains the position, name and color on all on-board computers and controls.

Interaction of the drive unit with the gear-shifting

You should shift through gears on an eBike in the same manner as when using a normal bicycle (observe the operating instructions of your eBike with regard to this point).

Irrespective of the type of gear shifting, it is advisable that you briefly reduce the pressure on the pedals when changing gear. This will aid gear shifting and reduce wear on the powertrain.

By selecting the correct gear, you can increase your speed and range while applying the same amount of force.

Switching Bicycle Lights On and Off (Mini Remote/Mini Remote Dropbar only)

Before starting each journey, check that your bike lights are working correctly.

To **switch on/off** the bike lights, press and hold the bicycle lights **(4)** button for more than 1 s.

Switching the push assistance on/off

The push assistance aids you when pushing your eBike. The maximum speed of the push assistance is **2.5 mph**. The manufacturer's default setting can be lower and may need to be adjusted by the bicycle retailer.

▶ **The push assistance function must only be used when pushing the eBike.** There is a risk of injury if the wheels of the eBike are not in contact with the ground while using the push assistance.

▶ **If the selected gear is too high, the drive unit may not be able to move the eBike or activate the roll-away lock.**

To **start** push assistance, press and hold the push assistance button **(6)** for more than 1 s. The battery charge indicator of the eBike battery **(13)** goes out and a white moving light in the direction of travel shows that it is ready.

To **activate** walk assistance, one of the following actions must occur within the next 10 s:

– Push the eBike forward.
– Push the eBike backward.
– Perform a sideways tilting movement with the eBike.

After activation, the drive begins to push and the continuously filling white bars change color to ice-blue.

If you release the walk assistance **(6)** button, walk assistance is stopped. You can reactivate walk assistance within 10 s by pressing the walk assistance **(6)** button.

If you do not reactivate walk assistance within 10 s, walk assistance automatically switches off.

Walk assistance is always ended if:

– The rear wheel jams,
– The bicycle cannot move over ridges,
– A body part is blocking the bike crank,
– An obstacle continues to turn the crank,
– You start pedaling,
– The increase assistance level **+**/bicycle lights **(4)** button or on/off button **(12)** is pressed.

Walk assistance has a roll-away lock, i.e. even after walk assistance has been used, rolling backwards is actively curbed by the drive for a few seconds, and you cannot push the eBike backwards or can only do so with difficulty.

The roll-away lock is immediately deactivated by pressing the increase assistance level **+**/bicycle lights **(4)** button.

The push assistance function is subject to local regulations; the way it works may therefore differ from the description above. It can also be deactivated.

ABS – Anti-lock braking system (optional)

If the eBike is equipped with a Bosch eBike ABS from the system generation **the smart system**, the ABS LED **(11)** lights up when the eBike system starts.

After moving off, the ABS internally checks its functionality and the ABS LED **(11)** goes off.

In the event of a fault, the ABS LED **(11)** lights up, together with the orange flashing riding mode LED **(10)**. You can acknowledge the fault using the select button **(5)** on the **Mini Remote/Mini Remote Dropbar (1)** operating unit or with the mode button **(14)** on the **System Controller (2)** operating unit. The flashing riding mode LED **(10)** will go out. While the ABS LED **(11)** is lit up, the ABS is not in operation.

For details on the ABS and how it works, please refer to the ABS operating instructions.

Establishing a Smartphone Connection with the System Controller

In order to be able to use the following eBike functions, a smartphone with the **eBike Flow** app is required.

Connection to the app occurs via a *Bluetooth*® connection.

Switch on the eBike and wait for the starting animation. Do not ride the eBike.

Begin *Bluetooth*® pairing by pressing and holding (> 3 s) the on/off button **(12)**. Release the on/off button **(12)** as soon as the topmost bar on the battery charge indicator of the eBike battery **(13)** indicates the pairing process by flashing blue.

Confirm the connection request in the app.

Activity tracking

In order to record activities, it is necessary to register and log into the **eBike Flow** app.

To record activities, you must consent to the storage of your location data in the app. Without this, your activities cannot be recorded in the app. For location data to be recorded, you must be logged in as the user.

eBike Lock

<eBike Lock> can be set up for each eBike via the **eBike Flow** app under **<Settings>** → **<My eBike>** → **<Lock & Alarm>**. In the process, a key for unlocking the eBike is saved on the smartphone and/or the **Kiox 300/Kiox 500** on-board computer.

The **<eBike Lock>** is automatically enabled in the following cases:

– The eBike is switched off via the operating unit
– The eBike is switched off automatically

If the eBike is switched on and the smartphone is connected to the eBike via *Bluetooth*®, or the pre-set on-board computer is fitted in the holder, the eBike will be unlocked.

<eBike Lock> is connected to your **user account**.

Should you lose your smartphone, you can log in via another smartphone using the **eBike Flow** app, and unlock your user account and the eBike.

If the on-board computer is lost, you can reset all digital keys in the **<Lock & Alarm>** menu item of the **eBike Flow** app.

Warning! If you select a setting in the app that leads to disadvantages for the **<eBike Lock>** (e.g. deletion of your eBike or user account), then you will first be shown warning messages. **Please read through these thoroughly and adhere to the warnings that are issued (e.g. before deleting your eBike or user account).**

Setting up <eBike Lock>

In order to be able to set up the **<eBike Lock>**, the following conditions must be fulfilled:

- The **eBike Flow** app has been installed.
- A user account has been created.
- No update is currently being carried out on the eBike.
- The eBike is connected to the smartphone via *Bluetooth*®.
- The eBike is stationary.
- The smartphone is connected to the Internet.
- The eBike battery is sufficiently charged, and the charging cable is not connected.

You can set up **<eBike Lock>** in the **eBike Flow** app under the **<Lock & Alarm>** menu item.

The eBike drive only provides support if, when the eBike is switched on, the smartphone is connected to the eBike via *Bluetooth*® or the on-board computer is fitted in the holder. If the smartphone is used as a key, your smartphone must have *Bluetooth*® switched on, and the **eBike Flow** app must be active in the background. If **<eBike Lock>** is activated, you can also use your eBike without support from the drive unit.

Compatibility

The **<eBike Lock>** is compatible with all Bosch drive units from the system generation **the smart system**.

How it works

In combination with the **<eBike Lock>**, the smartphone and the on-board computer work like a key for the drive unit. The **<eBike Lock>** is activated by switching off the eBike. When switching on, the eBike checks if any pre-set key is available. A white LED flashes on the **System Controller** operating unit, and a lock symbol is displayed on the on-board computer.

Note: The **<eBike Lock>** alone does not provide adequate theft protection; it is simply a supplement to a mechanical lock. The **<eBike Lock>** does not provide any form of mechanical lock for the eBike. Only the assistance from the drive unit is deactivated. The drive unit will be unlocked for as long as the smartphone is connected to the eBike via *Bluetooth*® or the on-board computer is placed in the holder.

If you want to give third parties temporary or permanent access to your eBike, share one of the preset digital keys (on-board computer/smartphone). As a result, the <eBike Lock> is still active. If you want to take your eBike to a service, the <eBike Lock> can be deactivated in the eBike Flow app in the menu item <Settings>. If you wish to sell your eBike, you will also need to delete the eBike from your user account in the **eBike Flow** app in the **<Settings>** menu item.

When the eBike is switched off, the drive unit will emit a "Lock" sound (i.e. an audio signal that is played **once**) to indicate that the assistance from the drive unit is switched off.

When the eBike is switched on, the drive unit will emit two "Unlock" sounds (i.e. an audio signal that is played **twice**) to indicate that the assistance from the drive unit is enabled again.

The "Lock" sound will help you determine whether or not the **<eBike Lock>** on your eBike is active. The audio signal is activated by default, but it can be deactivated in the **eBike Flow** app in the **<Locking sound>** menu item by selecting the lock symbol under your eBike.

Note: If you can no longer set up or switch off the **<eBike Lock>**, please contact your bicycle dealer.

Replacing eBike components and <eBike Lock>

Replacing the smartphone

1. Install the **eBike Flow** app on the new smartphone.
2. Log in using **the same** account with which you activated **<eBike Lock>**.
3. **<eBike Lock>** is displayed as set up in the **eBike Flow** app.

More information about this can be found in the **eBike Flow** app or in the Bosch eBike Help Center on the website www.bosch-ebike.com/help-center.

Software updates

Software updates must be started manually in the **eBike Flow** app.

Software updates are transferred from the app to the operating unit in the background as soon as it is connected to the app. During the update process, the green flashing of the battery charge indicator of the eBike battery **(13)** indicates the progress. The eBike is then restarted.

You can control the software updates via the **eBike Flow** app.

Connecting the System Controller to the Mini Remote/ Mini Remote Dropbar

The **System Controller** and **Mini Remote/Mini Remote Dropbar** operating units are connected via *Bluetooth*®.

Switch the eBike on and do not ride.

If the **Mini Remote/Mini Remote Dropbar** operating unit has not already been connected to the **System Controller** operating unit by the bicycle dealer, proceed as follows:

1. First connect your smartphone to the **System Controller** via the **eBike Flow** app (see "Establishing a Smartphone Connection with the System Controller", page English – 13).
2. Select **eBike Flow <Settings>** → **<My eBike>** → **<eBike pass>** → **<Components>** → **<Add new device>** in the app. Then select **<Mini Remote/Mini Remote Dropbar>**.
3. **Mini Remote/Mini Remote Dropbar**: Start the pairing process by pressing any button until the pairing process is shown by the LED indicator light **(3)** flashing blue.
4. Follow the instructions in the **eBike Flow** app.

If pairing is successful, this is shown within 30 s on the **Mini Remote/Mini Remote Dropbar** operating unit by the LED indicator light **(3)** flashing green three times.

If the connection cannot be established, this is shown by the LED indicator light **(3)** flashing red three times. Repeat the connection process.

If you want to connect the **Mini Remote/Mini Remote Dropbar** operating unit to a **System Controller** on another eBike, the following steps must be carried out:

1. First connect your smartphone to the System Controller via the **eBike Flow** app (see "Establishing a Smartphone Connection with the System Controller", page English – 13).
2. Select **eBike Flow <Settings>** → **<My eBike>** → **<eBike pass>** → **<Components>** → **<Add new device>** in the app. Then select **<Mini Remote/Mini Remote Dropbar>**.
3. **Mini Remote/Mini Remote Dropbar**: Remove the coin cell from the **Mini Remote/Mini Remote Dropbar** operating unit and wait for at least 30 s. Reinsert the coin cell and wait until the LED indicator light **(3)** flashes green.
4. Within the next 10 s, press and hold the decrease assistance level **–**/walk assistance **(6)** button for 5 s.
   The pairing process is shown by the LED indicator light **(3)** flashing blue for 30 s.
5. Follow the instructions in the **eBike Flow** app.
   If pairing is successful, this is shown within 30 s on the **Mini Remote/Mini Remote Dropbar** operating unit by the LED indicator light **(3)** flashing green three times. If the connection cannot be established, this is shown by the LED indicator light **(3)** flashing red three times. Repeat the connection process.

Troubleshooting

The operating unit shows whether critical errors or less critical errors occur on the eBike.

The error messages generated by the eBike can be read via the **eBike Flow** app or by your bicycle retailer.

Via a link in the **eBike Flow** app, information about the error and support for rectifying the error can be displayed.

Less critical errors

Less critical errors are shown by orange flashing, followed by the riding mode LED **(10)** lighting up continuously. To acknowledge the fault, press the select button **(5)** on the **Mini Remote/Mini Remote Dropbar (1)** operating unit or the mode button **(14)** on the **System Controller (2)** operating unit. The riding mode LED **(10)** once again continuously shows the color of the set riding mode.

You can use the following table to rectify the errors yourself if necessary. Otherwise, please contact your bicycle retailer.

Number	Troubleshooting
523005 **514001** **514002** **514003** **514006**	The indicated error numbers show that there is interference when the sensors detect the magnetic field. See whether you have lost the magnet while riding. If you are using a magnet sensor, check that the sensor and magnet have been properly installed. Make sure too that the cable to the sensor is not damaged. If you are using a rim magnet, make sure that you do not have any magnetic field interference in the vicinity of the drive unit.
680007 **680009** **680012** **680014** **680016**	The indicated error numbers show that the eBike battery is outside of the permissible operating temperature. The charging of the eBike battery is interrupted.
680017	As soon as the operating temperature returns to the permissible range, the charging process will start again.

Critical errors

Critical errors are shown by the riding mode LED **(10)** and the battery charge indicator of the eBike battery **(13)** flashing red and then lighting up continuously. Follow the instructions in the table below if a critical error occurs.

Number	Handling instructions
6A0004	Remove the PowerMore battery and restart your eBike. If the problem persists, please contact your specialist retailer.
890000	– Acknowledge the error code. – Restart the eBike system. If the problem persists: – Acknowledge the error code. – Perform the software update. – Restart the eBike system. If the problem persists: – Please contact a Bosch eBike systems specialist retailer.

Maintenance and Service

Maintenance/cleaning

⚠ WARNING

- ▶ **Do not open any of the components. Service should only be carried out at an authorized Bosch eBike dealer.** Failure to follow above warning can cause death or serious injury. Refer to your bicycle manual or component manual for all non-Bosch drive system components.
- ▶ **Do not submerge your eBike components in water, or wash with pressurized hose.** Your Bosch drive unit is designed to be water tight to rain water or non-pressure hose washing.
- ▶ **Do not paint any components of the Bosch drive system as they may cause premature failure of the component.**

The operating unit must not be cleaned with pressurized water.

Keep the operating unit clean. Dirt can cause faulty brightness detection.

Clean your operating unit using a soft cloth dampened only with water. Do not use cleaning products of any kind.

- ▶ **Only have repairs performed by a certified bicycle dealer.**

Note: If you are handing in your eBike to a bicycle dealer for maintenance, it is recommended that you deactivate **<Lock & Alarm>**.

After-sales service and advice on using products

If you have any questions about the eBike and its components, contact an authorized bicycle retailer.

For contact details of authorized bike dealerships, please visit www.bosch-ebike.com.

More information about the eBike components and their functions can be found in the Bosch eBike Help Center.

Battery Recycling Program

The drive unit, on-board computer incl. operating unit, eBike battery, speed sensor, accessories and packaging should be disposed of in an environmentally correct manner.

Do not dispose of eBikes and their components with household waste.

You may recycle your Bosch battery pack by calling 1.800.822.8837.

Robert Bosch GmbH
72757 Reutlingen
Germany

www.bosch-ebike.com

0 275 U07 3RC (2024.03) T / 59

Owner’s Manual
Drive Unit

BDU3142 | BDU3143 | BDU3144 | BDU3145 | BDU3182 | BDU3183 | BDU3184 | BDU3185



en Original operating instructions

This manual contains important safety, performance and service information. Read and understand it along with the information provided to you by your bicycle manufacturer before using the product, and keep it for reference.

Performance Line SX | Performance Line Sprint

Table of Contents

Introduction 2
About Warnings 2
General Warnings 2
Using your Manual 3
Operating your Bosch Drive Unit 4
Safety instructions 4
Product description and specifications 6
Assembly 7
Operation 8
Maintenance/Cleaning 9
Cleaning 10
Taking care of your eBike 10
After-sales service and advice on using products 10
Disposal 10

Introduction

Some content is published under license from the **PeopleForBikes Coalition, LTD**.

About Warnings

This manual contains many **DANGER**, **WARNING** and **CAUTION** indicators concerning the consequences of failure to use, assemble, maintain, store, inspect and dispose of a Bosch-equipped eBike in a safe manner.

– The combination of the safety alert symbol and the word **DANGER** indicates a hazardous situation that, if not avoided, will result in death or serious injury.
– The combination of the safety alert symbol and the word **WARNING** indicates a hazardous situation that, if not avoided, could result in death or serious injury.
– The combination of the safety alert symbol and the word **CAUTION** indicates a hazardous situation that, if not avoided, could result in minor or moderate injury.

General Warnings



Read all safety warnings and all instructions. Failure to follow the warnings and instructions may result in death, property damage or serious injury.

Save all safety warnings and instructions for future reference.

The term **eBike battery** used in these operating instructions refers to all original Bosch eBike batteries from the system generation **the smart system**.

▶ **Read ALL accompanying manuals before riding the bike for the first time.** Your Bosch Drive System comes with additional manuals and documents provided by the manufacturer of the bicycle and other components. Failure to read and understand safety information can result in death or serious injury.

⚠ WARNING

▶ **This manual contains important safety, performance and service information.** Read it before you take the first ride on your new bicycle, and keep it for reference. The manual can also be found online at www.bosch-ebike.com.

▶ **This manual is intended to be read together with the separate user manual provided with your bicycle.** Be sure to read all provided documents including labels on the product before your first ride.

▶ **Take responsibility for your own SAFETY.** If you have any questions or do not understand something, consult with your dealer or the bicycle or component manufacturer.

▶ **Some eBike accessories may present a choking hazard to small children.** Keep these accessories away from children.

⚠ CAUTION

▶ **The Bosch Drive System adds weight to your bicycle which you may not be used to lift.** Avoid injury, use proper lifting techniques.

Using your Manual

In addition to the functions outlined here, changes to software relating to troubleshooting and functional modifications may be introduced at any time.

Graphics

The bicycle shown in this manual may differ slightly from your bicycle, but will be similar enough to help you understand our instructions.

RIGHT-HAND and LEFT-HAND sides are determined by facing in the direction the bicycle will travel when going forward. When you see a broken line (------), the item referred to is hidden from view.

Operating your Bosch Drive Unit

Safety instructions



Read and understand all safety warnings and instructions. Failure to follow the below warnings could result in death or serious injury.

Save all safety warnings and instructions for future reference.

The term **eBike battery** used in these operating instructions refers to all original Bosch eBike batteries from the system generation **the smart system**.

The terms **drive** and **drive unit** used in these operating instructions refer to all original Bosch drive units from the system generation **the smart system**.

- ▶ **Read and observe the safety warnings and instructions in all operating instructions of the eBike components and your eBike.**
- ▶ **It is recommended that you periodically review this information to ensure you are following all recommendations for safe use of this product.**
- ▶ **Do not make any kind of modifications to the drive. Do not use any products to increase the performance and/or top speed of the eBike.** Modifying an eBike to increase its performance or speed may be unlawful and can result in component failure or a loss of control, leading to a crash resulting in serious injury or death. A modified eBike may no longer be regulated as an eBike, placing the operator at risk of personal liability and criminal prosecution in the event of a crash. In addition, doing so will generally reduce the service life of the eBike components. The drive unit and eBike may be damaged and guarantee and warranty claims on the eBike you have purchased may consequently be voided.
- ▶ **Do not open the drive unit. The drive unit must be repaired using only original spare parts and only by an authorized bicycle retailer.** This will ensure that the eBike remains safe to use. Unauthorized opening of the drive unit may render warranty claims null and void.
- ▶ **Remove the eBike battery from the eBike before beginning work (e.g. inspection, repair, assembly, maintenance, work on the chain, etc.) on the eBike. When working on permanently installed eBike batteries, take particular care to ensure that the eBike cannot be switched on.** Unintentional activation of the eBike poses a risk of injury.
- ▶ **The eBike can be switched on by pushing the eBike backwards or by turning the pedals backwards.**
- ▶ **Do not remove permanently installed eBike batteries yourself. Permanently installed eBike batteries must only be installed and removed by authorized bicycle retailers.**



Under extreme conditions, such as continuously high loads at low speed when riding up hills or carrying loads, parts of the drive unit can reach temperatures in excess of 140 °F.

- ▶ **After a ride, do not allow your unprotected hands or legs to come into contact with the housing of the drive unit.** Under extreme conditions, such as continuously high torques at low travel speeds, or when riding up hills or carrying loads, very high temperatures may be reached on the housing. Contact with hot components can result in burns if touched.

  The temperatures that may be reached on the drive unit housing are influenced by the following factors:
  – Ambient temperature
  – Ride profile (route/gradient)
  – Ride duration
  – Riding modes
  – User behavior (personal effort)
  – Total weight (rider, eBike, luggage)

– Motor cover on the drive unit
– Heat dissipation properties of the bicycle frame
– Type of drive unit and type of gear-shifting

▶ **Use only original Bosch eBike batteries from the system generation the smart system that the manufacturer has approved for your eBike.** Using other eBike batteries can lead to injuries and pose a fire hazard. Bosch accepts no liability if other eBike batteries are used.

Safety instructions for the rim magnet

The following safety instructions must be observed when handling the rim magnet:

▶ **Warning of very strong magnetic fields: The rim magnet generates a very strong magnetic field that may influence the magnetic storage media (e.g. credit card) and electronic devices (e.g. clock). There is a risk of data loss and damage to devices.** Do not move any media or devices sensitive to magnetic fields into the immediate vicinity of the rim magnet.

▶ **Warning of hand injuries caused by parts attracted to the magnet: There is a risk of injury if your fingers or hands get caught between the magnet and the objects attracted to it. This may cause skin injuries (e.g. if metal chips are attracted), crushing injuries, contusions or fractures.** You can avoid these by being vigilant and wearing suitable protective clothing.

▶ **Danger to persons with implants and other medical devices, e.g. pacemakers, defribrillators or insulin pumps:**
Keep these away from the immediate vicinity of the rim magnet.

– The magnet creates a field which can impair the function of implants and medical devices.
– To avoid impairments, the rim magnet should not be held directly in front of the chest.
– A minimum distance of 30 cm to the chest should be maintained.

▶ **Observe all national regulations which set out the approved use of eBikes.**

▶ **Please observe all local, state and federal regulations when registering and using eBikes.**

Privacy notice

When connecting the eBike to the **Bosch Diagnostic-Tool 3** or when exchanging eBike components, technical information about your eBike (e.g. manufacturer, model, bike ID, configuration data) as well as regarding the use of the eBike (e.g. total travel time, energy consumption, temperature) is transmitted to Bosch eBike Systems (Robert Bosch GmbH) for processing your request, in service cases and for the purposes of product improvement. More information on data processing can be found at www.bosch-ebike.com/privacy-full.

Product description and specifications

Intended use

The Bosch drive unit from the system generation **the smart system** is intended exclusively for driving your eBike and must not be used for any other purpose.

In addition to the functions outlined here, changes to software relating to troubleshooting and functional modifications may be introduced at any time.

Technical data

Drive unit		Drive Unit Performance Line SX Performance Line Sprint
Product code		BDU3142 BDU3143 BDU3144 BDU3145 BDU3182 BDU3183 BDU3184 BDU3185
Continuous rated power	W	250
Torque at drive, max.	Nm	55
Rated voltage	V	36
Operating temperature	°F	23 to 104
Storage temperature	°F	50 to 104
Protection rating		IP55
Weight, approx.	lbs	4.4

Bosch eBike Systems uses FreeRTOS (see www.freertos.org).

Bicycle lights[A)]		
Voltage approx.	V	12
Maximum power	W	18

A) Depends on legal regulations, not possible in all country-specific models via the eBike battery

Inserting a bulb incorrectly can cause it to blow.

Details on noise emissions on the drive unit

The A-rated emission sound pressure level for the drive unit is < 70 dB(A) in standard operating mode. If the eBike is moved without authorization, the drive unit generates an alarm tone as a key feature of the **<eBike Alarm>** service. This alarm tone may exceed the emission sound pressure level of 70 dB(A) and is 80 dB(A) two meters away from the drive unit. The alarm tone is only available after activating the **<eBike Alarm>** service and can be deactivated again via the **eBike Flow** app.

Assembly

Checking the speed sensor (see figure A)

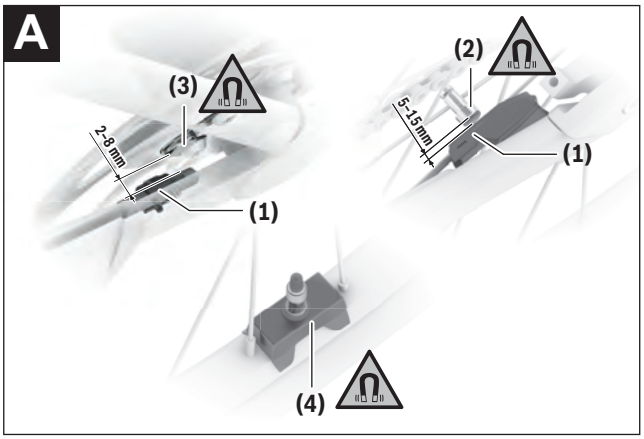

(1) Speed sensor [a)]

(2) Spoke magnet

(3) CenterLock magnet [b)]

(4) Rim magnet

a) Different sensor shape and installation position possible

b) a different installation position is possible

Speed Sensor (slim)

The speed sensor **(1)** and its CenterLock magnet **(3)** or spoke magnet **(2)** are mounted ex works in such a manner that the magnet, after a turn of the wheel, moves past the speed sensor with a clearance of at least 2 mm, yet no more than 15 mm.

The correct distance between the magnet and sensor must be maintained (see figure **A**) if design changes are made.

Notes: Ensure that you do not damage the sensor or sensor bracket when fitting or removing the rear wheel.

When changing a wheel, make sure that the sensor cable is routed so that it is not under tension and has no kinks.

The CenterLock magnet **(3)** can only be removed and reinserted up to five times.

Rim magnet

Note: The rim magnet's alignment with the rim must not be changed (see figure **A**).

If a rim magnet is installed, no sensor is required to detect a wheel turn. The drive unit itself detects when the magnet is close to it and calculates the speed and any other data required from the frequency of the emergence of the magnetic field.

Since the drive unit is sensitive to magnetic fields, avoid other magnetic fields in the vicinity of the drive unit (e.g. magnetic clipless pedals, magnetic cadence sensors, magnetic or magnetized tools, etc.) in order to prevent disruption to the drive unit.

Operation

Notes on cycling with your eBike

Note: The eBike system **always** starts in **OFF** mode for drive units with a maximum speed of more than **20 mph**.

When does the drive take effect?

The drive assists your cycling only when you are pedaling. If you do not pedal, the assistance will not work. The drive output always depends on the pedaling force and cadence that you apply.

With a lower force applied or a less frequent cadence, the assistance provided will be lower than that supplied at a higher force or a more frequent cadence. This applies irrespective of the riding mode.

The drive automatically switches off at speeds over **20/28 mph**. When the speed falls below **20/28 mph**, the drive automatically becomes available again.

An exception applies to the push assistance function, in which the eBike can be pushed at low speed without pedaling. The pedals may rotate when the push assistance is in use.

You can also use the eBike as a normal bicycle without assistance at any time, either by switching off the eBike or by setting the riding mode to **OFF**. The same applies when the eBike battery is drained.

Interaction of the drive unit with the gear-shifting

You should shift through gears on an eBike in the same manner as when using a normal bicycle (observe the operating instructions of your eBike with regard to this point).

Irrespective of the type of gear shifting, it is advisable that you briefly reduce the pressure on the pedals when changing gear. This will aid gear shifting and reduce wear on the powertrain.

By selecting the correct gear, you can increase your speed and range while applying the same amount of force.

Gaining initial experience

We recommend that you gain initial experience with the eBike away from busy roads.

Test the various riding modes. Start in a riding mode with a small amount of assistance. As soon as you feel confident, you can ride your eBike in traffic like any other bicycle.

Test the range of your eBike in different conditions before planning longer and more demanding trips.

Influences on range

It is not possible to calculate the range accurately before and during a trip because the range is affected by a number of factors.

Enter the factors in the Range Assistant in order to better assess the effects on the range.


Scan the code provided to open the Range Assistant.

Maintenance/Cleaning

⚠ WARNING

- **Do not open any of the components. Service should only be carried out at an authorized Bosch eBike dealer.** Failure to follow above warning can cause death or serious injury. Refer to your bicycle manual or component manual for all non-Bosch drive system components.
- **Always remove the battery pack before performing any bicycle inspection, maintenance or repair.** Failure to remove the battery pack before performing bicycle inspection, maintenance or repair can lead to serious injury.
- **If you suspect that something is loose, do not ride your bike.** See your Bosch eBike dealer, only a qualified service provider should perform work on your Bosch Drive System. All nuts, bolts, screws require the correct tightening force. Too little force and the fastener may not hold securely. Too much force and the fastener can strip threads, stretch, deform or break. Either way, incorrect tightening force can result in component failure, which can cause you to lose control and fall.
- **If replacing your battery, buy only a genuine Bosch battery pack from an approved source. See your Bosch eBike dealer for original Bosch parts.**
- **Always switch the battery pack off, when inserting or removing it from the holder.** Never attempt to insert or remove the battery pack while riding the bike.
- **Do not charge or use your eBike in any area with a potentially explosive atmosphere, such as at a fueling area, or in areas where the air contains chemicals or particles (such as grain, dust, or metal powders).** Obey all signs and instructions.
- **Do not submerge your eBike components in water, or wash with pressurized hose.** Your Bosch drive unit is designed to be water tight to rain water or non-pressure hose washing.
- **Note down the manufacturer and the number of the key.** In case of loss of the keys, please refer to an authorised Bosch eBike dealer. Please provide the name of the manufacturer and the number of the key.
- **Do not apply any cleaning agents, paint or chemicals to any components of the Bosch drive system as they may cause premature failure of the component.**

When changing the bulbs, ensure that they are compatible with the Bosch eBike system of the generation **the smart system** (ask your bicycle retailer) and are suitable for the specified voltage. Bulbs must only be replaced with bulbs of the same voltage.

All components fitted to the drive unit and all other components of the drive (e.g. chainring, chainring receptacle, pedals, cranks) must only be replaced with identical components or components that have been specifically approved by the manufacturer for your eBike. This will protect the drive unit from overloading and becoming damaged.

Keep the drive unit clean and avoid contact with aggressive substances and fuels, e.g. diesel. Take care when cleaning the drive unit.

Cleaning

- **Do not submerge your eBike components in water, or wash with pressurized hose.** Your Bosch drive unit is designed to be water tight to rain water or non-pressure hose washing.

Keep all components of your eBike clean, especially the battery pack contacts and corresponding holder contacts. All components including the drive unit may not be immersed in water or cleaned with a high-pressure cleaner. Clean them carefully with a soft, damp cloth (using only mild soap and water).

Taking care of your eBike

Please observe the operating and storage temperatures of the eBike components. Protect the drive unit, on-board computer and eBike battery against extreme temperatures (e.g. from intense sunlight without adequate ventilation). Extreme temperatures can cause the components (especially the eBike battery) to become damaged.

Have your eBike checked by an expert at least once a year (including mechanical parts, up-to-dateness of system software).

Please have your eBike serviced and repaired by an authorized bicycle dealer.

After-sales service and advice on using products

If you have any questions about the eBike and its components, contact an authorized bicycle retailer.

For contact details of authorized bike dealerships, please visit www.bosch-ebike.com.

More information about the eBike components and their functions can be found in the Bosch eBike Help Center.

Disposal



The drive unit, on-board computer incl. operating unit, eBike battery, speed sensor, accessories and packaging should be disposed of in an environmentally correct manner.

Do not dispose of eBikes and their components with household waste.

Please return Bosch eBike components that are no longer usable, free of charge, to an authorized bicycle dealer or a recycling center.

Subject to change without notice.

Robert Bosch GmbH
72757 Reutlingen
Germany

www.bosch-ebike.com

0 275 U07 3D3 (2024.03) T / 32

Owner’s Manual
Drive Unit

BDU3320 | BDU3340 | BDU3360 | BDU3380



en Original operating instructions

This manual contains important safety, performance and service information. Read and understand it along with the information provided to you by your bicycle manufacturer before using the product, and keep it for reference.

Active Line | Active Line Plus | Performance Line | Performance Line Sport

Table of Contents

Introduction 2
About Warnings 2
General Warnings 2
Using your Manual 3
Operating your Bosch Drive Unit 4
Safety instructions 4
Product description and specifications 6
Assembly 7
Operation 8
Maintenance/Cleaning 9
Cleaning 10
Taking care of your eBike 10
After-sales service and advice on using products 10
Disposal 10

Introduction

Some content is published under license from the **PeopleForBikes Coalition, LTD**.

About Warnings

This manual contains many **DANGER**, **WARNING** and **CAUTION** indicators concerning the consequences of failure to use, assemble, maintain, store, inspect and dispose of a Bosch-equipped eBike in a safe manner.

– The combination of the safety alert symbol and the word **DANGER** indicates a hazardous situation that, if not avoided, will result in death or serious injury.
– The combination of the safety alert symbol and the word **WARNING** indicates a hazardous situation that, if not avoided, could result in death or serious injury.
– The combination of the safety alert symbol and the word **CAUTION** indicates a hazardous situation that, if not avoided, could result in minor or moderate injury.

General Warnings



Read all safety warnings and all instructions. Failure to follow the warnings and instructions may result in death, property damage or serious injury.

Save all safety warnings and instructions for future reference.

The term **eBike battery** used in these operating instructions refers to all original Bosch eBike batteries from the system generation **the smart system**.

▶ **Read ALL accompanying manuals before riding the bike for the first time.** Your Bosch Drive System comes with additional manuals and documents provided by the manufacturer of the bicycle and other components. Failure to read and understand safety information can result in death or serious injury.

⚠ WARNING

▶ **This manual contains important safety, performance and service information.** Read it before you take the first ride on your new bicycle, and keep it for reference. The manual can also be found online at www.bosch-ebike.com.

▶ **This manual is intended to be read together with the separate user manual provided with your bicycle.** Be sure to read all provided documents including labels on the product before your first ride.

▶ **Take responsibility for your own SAFETY.** If you have any questions or do not understand something, consult with your dealer or the bicycle or component manufacturer.

▶ **Some eBike accessories may present a choking hazard to small children.** Keep these accessories away from children.

⚠ CAUTION

▶ **The Bosch Drive System adds weight to your bicycle which you may not be used to lift.** Avoid injury, use proper lifting techniques.

Using your Manual

In addition to the functions outlined here, changes to software relating to troubleshooting and functional modifications may be introduced at any time.

Graphics

The bicycle shown in this manual may differ slightly from your bicycle, but will be similar enough to help you understand our instructions.

RIGHT-HAND and LEFT-HAND sides are determined by facing in the direction the bicycle will travel when going forward. When you see a broken line (------), the item referred to is hidden from view.

Operating your Bosch Drive Unit

Safety instructions



Read and understand all safety warnings and instructions. Failure to follow the below warnings could result in death or serious injury.

Save all safety warnings and instructions for future reference.

The term **eBike battery** used in these operating instructions refers to all original Bosch eBike batteries from the system generation **the smart system**.

The terms **drive** and **drive unit** used in these operating instructions refer to all original Bosch drive units from the system generation **the smart system**.

- ▶ **Read and observe the safety warnings and instructions in all operating instructions of the eBike components and your eBike.**
- ▶ **It is recommended that you periodically review this information to ensure you are following all recommendations for safe use of this product.**
- ▶ **Do not make any kind of modifications to the drive. Do not use any products to increase the performance and/or top speed of the eBike.** Modifying an eBike to increase its performance or speed may be unlawful and can result in component failure or a loss of control, leading to a crash resulting in serious injury or death. A modified eBike may no longer be regulated as an eBike, placing the operator at risk of personal liability and criminal prosecution in the event of a crash. In addition, doing so will generally reduce the service life of the eBike components. The drive unit and eBike may be damaged and guarantee and warranty claims on the eBike you have purchased may consequently be voided.
- ▶ **Do not open the drive unit. The drive unit must be repaired using only original spare parts and only by an authorized bicycle retailer.** This will ensure that the eBike remains safe to use. Unauthorized opening of the drive unit may render warranty claims null and void.
- ▶ **Remove the eBike battery from the eBike before beginning work (e.g. inspection, repair, assembly, maintenance, work on the chain, etc.) on the eBike. When working on permanently installed eBike batteries, take particular care to ensure that the eBike cannot be switched on.** Unintentional activation of the eBike poses a risk of injury.
- ▶ **The eBike can be switched on by pushing the eBike backwards or by turning the pedals backwards.**
- ▶ **Do not remove permanently installed eBike batteries yourself. Permanently installed eBike batteries must only be installed and removed by authorized bicycle retailers.**



Under extreme conditions, such as continuously high loads at low speed when riding up hills or carrying loads, parts of the drive unit can reach temperatures in excess of 140 °F.

- ▶ **After a ride, do not allow your unprotected hands or legs to come into contact with the housing of the drive unit.** Under extreme conditions, such as continuously high torques at low travel speeds, or when riding up hills or carrying loads, very high temperatures may be reached on the housing. Contact with hot components can result in burns if touched.

  The temperatures that may be reached on the drive unit housing are influenced by the following factors:
  – Ambient temperature
  – Ride profile (route/gradient)
  – Ride duration
  – Riding modes
  – User behavior (personal effort)
  – Total weight (rider, eBike, luggage)

– Motor cover on the drive unit
– Heat dissipation properties of the bicycle frame
– Type of drive unit and type of gear-shifting

▶ **Use only original Bosch eBike batteries from the system generation the smart system that the manufacturer has approved for your eBike.** Using other eBike batteries can lead to injuries and pose a fire hazard. Bosch accepts no liability if other eBike batteries are used.

Safety instructions for the rim magnet

The following safety instructions must be observed when handling the rim magnet:

▶ **Warning of very strong magnetic fields: The rim magnet generates a very strong magnetic field that may influence the magnetic storage media (e.g. credit card) and electronic devices (e.g. clock). There is a risk of data loss and damage to devices.** Do not move any media or devices sensitive to magnetic fields into the immediate vicinity of the rim magnet.

▶ **Warning of hand injuries caused by parts attracted to the magnet: There is a risk of injury if your fingers or hands get caught between the magnet and the objects attracted to it. This may cause skin injuries (e.g. if metal chips are attracted), crushing injuries, contusions or fractures.** You can avoid these by being vigilant and wearing suitable protective clothing.

▶ **Danger to persons with implants and other medical devices, e.g. pacemakers, defribrillators or insulin pumps:**
Keep these away from the immediate vicinity of the rim magnet.

– The magnet creates a field which can impair the function of implants and medical devices.
– To avoid impairments, the rim magnet should not be held directly in front of the chest.
– A minimum distance of 30 cm to the chest should be maintained.

▶ **Observe all national regulations which set out the approved use of eBikes.**

▶ **Please observe all local, state and federal regulations when registering and using eBikes.**

Privacy notice

When connecting the eBike to the **Bosch Diagnostic-Tool 3** or when exchanging eBike components, technical information about your eBike (e.g. manufacturer, model, bike ID, configuration data) as well as regarding the use of the eBike (e.g. total travel time, energy consumption, temperature) is transmitted to Bosch eBike Systems (Robert Bosch GmbH) for processing your request, in service cases and for the purposes of product improvement. More information on data processing can be found at www.bosch-ebike.com/privacy-full.

Product description and specifications

Intended use

The Bosch drive unit from the system generation **the smart system** is intended exclusively for driving your eBike and must not be used for any other purpose.

In addition to the functions outlined here, changes to software relating to troubleshooting and functional modifications may be introduced at any time.

Technical data

Drive unit		Drive Unit Active Line	Drive Unit Active Line Plus	Drive Unit Performance Line/ Performance Line Sport
Product code		BDU3320	BDU3340	BDU3360 BDU3380
Continuous rated power	W	250	250	250
Torque at drive, max.	Nm	40	50	75
Rated voltage	V	36	36	36
Operating temperature	°F	23 to 104	23 to 104	23 to 104
Storage temperature	°F	50 to 104	50 to 104	50 to 104
Protection rating		IP55	IP55	IP55
Weight, approx.	lbs	6.4	7.05	7.05

Bosch eBike Systems uses FreeRTOS (see www.freertos.org).

Bicycle lights[A)]		
Voltage approx.	V	12
Maximum power	W	18

A) Depends on legal regulations, not possible in all country-specific models via the eBike battery

Inserting a bulb incorrectly can cause it to blow.

Details on noise emissions on the drive unit

The A-rated emission sound pressure level for the drive unit is < 70 dB(A) in standard operating mode. If the eBike is moved without authorization, the drive unit generates an alarm tone as a key feature of the **<eBike Alarm>** service. This alarm tone may exceed the emission sound pressure level of 70 dB(A) and is 80 dB(A) two meters away from the drive unit. The alarm tone is only available after activating the **<eBike Alarm>** service and can be deactivated again via the **eBike Flow** app.

Assembly

Checking the speed sensor (see figure A)

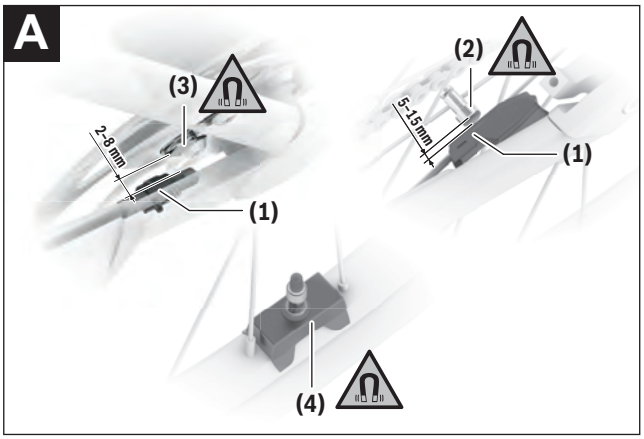

(1) Speed sensor [a)]

(2) Spoke magnet

(3) CenterLock magnet [b)]

(4) Rim magnet

a) Different sensor shape and installation position possible

b) a different installation position is possible

Speed Sensor (slim)

The speed sensor **(1)** and its CenterLock magnet **(3)** or spoke magnet **(2)** are mounted ex works in such a manner that the magnet, after a turn of the wheel, moves past the speed sensor with a clearance of at least 2 mm, yet no more than 15 mm.

The correct distance between the magnet and sensor must be maintained (see figure **A**) if design changes are made.

Notes: Ensure that you do not damage the sensor or sensor bracket when fitting or removing the rear wheel.

When changing a wheel, make sure that the sensor cable is routed so that it is not under tension and has no kinks.

The CenterLock magnet **(3)** can only be removed and reinserted up to five times.

Rim magnet

Note: The rim magnet's alignment with the rim must not be changed (see figure **A**).

If a rim magnet is installed, no sensor is required to detect a wheel turn. The drive unit itself detects when the magnet is close to it and calculates the speed and any other data required from the frequency of the emergence of the magnetic field.

Since the drive unit is sensitive to magnetic fields, avoid other magnetic fields in the vicinity of the drive unit (e.g. magnetic clipless pedals, magnetic cadence sensors, magnetic or magnetized tools, etc.) in order to prevent disruption to the drive unit.

Operation

An operating unit from the system generation **the smart system** is required for starting operation of the eBike. Observe the operating instructions for the operating unit and additional components from the system generation **the smart system** where necessary.

Notes on cycling with your eBike

When does the drive take effect?

The drive assists your cycling only when you are pedaling. If you do not pedal, the assistance will not work. The drive output always depends on the pedaling force and cadence that you apply.

With a lower force applied or a less frequent cadence, the assistance provided will be lower than that supplied at a higher force or a more frequent cadence. This applies irrespective of the riding mode.

The drive automatically switches off at speeds over **20/28 mph**. When the speed falls below **20/28 mph**, the drive automatically becomes available again.

An exception applies to the push assistance function, in which the eBike can be pushed at low speed without pedaling. The pedals may rotate when the push assistance is in use.

You can also use the eBike as a normal bicycle without assistance at any time, either by switching off the eBike or by setting the riding mode to **OFF**. The same applies when the eBike battery is drained.

Interaction of the drive unit with the gear-shifting

You should shift through gears on an eBike in the same manner as when using a normal bicycle (observe the operating instructions of your eBike with regard to this point).

Irrespective of the type of gear shifting, it is advisable that you briefly reduce the pressure on the pedals when changing gear. This will aid gear shifting and reduce wear on the powertrain.

By selecting the correct gear, you can increase your speed and range while applying the same amount of force.

Gaining initial experience

We recommend that you gain initial experience with the eBike away from busy roads.

Test the various riding modes. Start in a riding mode with a small amount of assistance. As soon as you feel confident, you can ride your eBike in traffic like any other bicycle.

Test the range of your eBike in different conditions before planning longer and more demanding trips.

Influences on range

It is not possible to calculate the range accurately before and during a trip because the range is affected by a number of factors.

Enter the factors in the Range Assistant in order to better assess the effects on the range.

Scan the code provided to open the Range Assistant.

Maintenance/Cleaning

⚠ WARNING

- **Do not open any of the components. Service should only be carried out at an authorized Bosch eBike dealer.** Failure to follow above warning can cause death or serious injury. Refer to your bicycle manual or component manual for all non-Bosch drive system components.
- **Always remove the battery pack before performing any bicycle inspection, maintenance or repair.** Failure to remove the battery pack before performing bicycle inspection, maintenance or repair can lead to serious injury.
- **If you suspect that something is loose, do not ride your bike.** See your Bosch eBike dealer, only a qualified service provider should perform work on your Bosch Drive System. All nuts, bolts, screws require the correct tightening force. Too little force and the fastener may not hold securely. Too much force and the fastener can strip threads, stretch, deform or break. Either way, incorrect tightening force can result in component failure, which can cause you to lose control and fall.
- **If replacing your battery, buy only a genuine Bosch battery pack from an approved source. See your Bosch eBike dealer for original Bosch parts.**
- **Always switch the battery pack off, when inserting or removing it from the holder.** Never attempt to insert or remove the battery pack while riding the bike.
- **Do not charge or use your eBike in any area with a potentially explosive atmosphere, such as at a fueling area, or in areas where the air contains chemicals or particles (such as grain, dust, or metal powders).** Obey all signs and instructions.
- **Do not submerge your eBike components in water, or wash with pressurized hose.** Your Bosch drive unit is designed to be water tight to rain water or non-pressure hose washing.
- **Note down the manufacturer and the number of the key.** In case of loss of the keys, please refer to an authorised Bosch eBike dealer. Please provide the name of the manufacturer and the number of the key.
- **Do not apply any cleaning agents, paint or chemicals to any components of the Bosch drive system as they may cause premature failure of the component.**

When changing the bulbs, ensure that they are compatible with the Bosch eBike system of the generation **the smart system** (ask your bicycle retailer) and are suitable for the specified voltage. Bulbs must only be replaced with bulbs of the same voltage.

All components fitted to the drive unit and all other components of the drive (e.g. chainring, chainring receptacle, pedals, cranks) must only be replaced with identical components or components that have been specifically approved by the manufacturer for your eBike. This will protect the drive unit from overloading and becoming damaged.

Keep the drive unit clean and avoid contact with aggressive substances and fuels, e.g. diesel. Take care when cleaning the drive unit.

Cleaning

- **Do not submerge your eBike components in water, or wash with pressurized hose.** Your Bosch drive unit is designed to be water tight to rain water or non-pressure hose washing.

Keep all components of your eBike clean, especially the battery pack contacts and corresponding holder contacts. All components including the drive unit may not be immersed in water or cleaned with a high-pressure cleaner. Clean them carefully with a soft, damp cloth (using only mild soap and water).

Taking care of your eBike

Please observe the operating and storage temperatures of the eBike components. Protect the drive unit, on-board computer and eBike battery against extreme temperatures (e.g. from intense sunlight without adequate ventilation). Extreme temperatures can cause the components (especially the eBike battery) to become damaged.

Have your eBike checked by an expert at least once a year (including mechanical parts, up-to-dateness of system software).

Please have your eBike serviced and repaired by an authorized bicycle dealer.

After-sales service and advice on using products

If you have any questions about the eBike and its components, contact an authorized bicycle retailer.

For contact details of authorized bike dealerships, please visit www.bosch-ebike.com.

More information about the eBike components and their functions can be found in the Bosch eBike Help Center.

Disposal



The drive unit, on-board computer incl. operating unit, eBike battery, speed sensor, accessories and packaging should be disposed of in an environmentally correct manner.

Do not dispose of eBikes and their components with household waste.

Please return Bosch eBike components that are no longer usable, free of charge, to an authorized bicycle dealer or a recycling center.

Subject to change without notice.

Robert Bosch GmbH
72757 Reutlingen
Germany

www.bosch-ebike.com

0 275 U07 3D2 (2024.03) T / 32

Active Line | Active Line Plus | Performance Line | Performance Line Sport

Owner's Manual
Drive Unit

BDU3740 | BDU3741 | BDU3742 | BDU3743 | BDU3760 | BDU3761 | BDU3780 | BDU3781



en Original operating instructions

This manual contains important safety, performance and service information. Read and understand it along with the information provided to you by your bicycle manufacturer before using the product, and keep it for reference.

Performance Line CX | CX Race Limited Edition | Performance Line Speed | Cargo Line

Table of Contents

Introduction 2
About Warnings 2
General Warnings 2
Using your Manual 3
Operating your Bosch Drive Unit 4
Safety instructions 4
Product description and specifications 6
Assembly 7
Operation 8
Maintenance/Cleaning 9
Cleaning 10
Taking care of your eBike 10
After-sales service and advice on using products 10
Disposal 10

Introduction

Some content is published under license from the **PeopleForBikes Coalition, LTD**.

About Warnings

This manual contains many **DANGER**, **WARNING** and **CAUTION** indicators concerning the consequences of failure to use, assemble, maintain, store, inspect and dispose of a Bosch-equipped eBike in a safe manner.

– The combination of the safety alert symbol and the word **DANGER** indicates a hazardous situation that, if not avoided, will result in death or serious injury.
– The combination of the safety alert symbol and the word **WARNING** indicates a hazardous situation that, if not avoided, could result in death or serious injury.
– The combination of the safety alert symbol and the word **CAUTION** indicates a hazardous situation that, if not avoided, could result in minor or moderate injury.

General Warnings



Read all safety warnings and all instructions. Failure to follow the warnings and instructions may result in death, property damage or serious injury.

Save all safety warnings and instructions for future reference.

The term **eBike battery** used in these operating instructions refers to all original Bosch eBike batteries from the system generation **the smart system**.

▶ **Read ALL accompanying manuals before riding the bike for the first time.** Your Bosch Drive System comes with additional manuals and documents provided by the manufacturer of the bicycle and other components. Failure to read and understand safety information can result in death or serious injury.

⚠ WARNING

▶ **This manual contains important safety, performance and service information.** Read it before you take the first ride on your new bicycle, and keep it for reference. The manual can also be found online at www.bosch-ebike.com.

▶ **This manual is intended to be read together with the separate user manual provided with your bicycle.** Be sure to read all provided documents including labels on the product before your first ride.

▶ **Take responsibility for your own SAFETY.** If you have any questions or do not understand something, consult with your dealer or the bicycle or component manufacturer.

▶ **Some eBike accessories may present a choking hazard to small children.** Keep these accessories away from children.

⚠ CAUTION

▶ **The Bosch Drive System adds weight to your bicycle which you may not be used to lift.** Avoid injury, use proper lifting techniques.

Using your Manual

In addition to the functions outlined here, changes to software relating to troubleshooting and functional modifications may be introduced at any time.

Graphics

The bicycle shown in this manual may differ slightly from your bicycle, but will be similar enough to help you understand our instructions.

RIGHT-HAND and LEFT-HAND sides are determined by facing in the direction the bicycle will travel when going forward. When you see a broken line (------), the item referred to is hidden from view.

Operating your Bosch Drive Unit

Safety instructions



Read and understand all safety warnings and instructions. Failure to follow the below warnings could result in death or serious injury.

Save all safety warnings and instructions for future reference.

The term **eBike battery** used in these operating instructions refers to all original Bosch eBike batteries from the system generation **the smart system**.

The terms **drive** and **drive unit** used in these operating instructions refer to all original Bosch drive units from the system generation **the smart system**.

- ▶ **Read and observe the safety warnings and instructions in all operating instructions of the eBike components and your eBike.**
- ▶ **It is recommended that you periodically review this information to ensure you are following all recommendations for safe use of this product.**
- ▶ **Do not make any kind of modifications to the drive. Do not use any products to increase the performance and/or top speed of the eBike.** Modifying an eBike to increase its performance or speed may be unlawful and can result in component failure or a loss of control, leading to a crash resulting in serious injury or death. A modified eBike may no longer be regulated as an eBike, placing the operator at risk of personal liability and criminal prosecution in the event of a crash. In addition, doing so will generally reduce the service life of the eBike components. The drive unit and eBike may be damaged and guarantee and warranty claims on the eBike you have purchased may consequently be voided.
- ▶ **Do not open the drive unit. The drive unit must be repaired using only original spare parts and only by an authorized bicycle retailer.** This will ensure that the eBike remains safe to use. Unauthorized opening of the drive unit may render warranty claims null and void.
- ▶ **Remove the eBike battery from the eBike before beginning work (e.g. inspection, repair, assembly, maintenance, work on the chain, etc.) on the eBike. When working on permanently installed eBike batteries, take particular care to ensure that the eBike cannot be switched on.** Unintentional activation of the eBike poses a risk of injury.
- ▶ **The eBike can be switched on by pushing the eBike backwards or by turning the pedals backwards.**
- ▶ **Do not remove permanently installed eBike batteries yourself. Permanently installed eBike batteries must only be installed and removed by authorized bicycle retailers.**



Under extreme conditions, such as continuously high loads at low speed when riding up hills or carrying loads, parts of the drive unit can reach temperatures in excess of 140 °F.

- ▶ **After a ride, do not allow your unprotected hands or legs to come into contact with the housing of the drive unit.** Under extreme conditions, such as continuously high torques at low travel speeds, or when riding up hills or carrying loads, very high temperatures may be reached on the housing. Contact with hot components can result in burns if touched.

  The temperatures that may be reached on the drive unit housing are influenced by the following factors:
  – Ambient temperature
  – Ride profile (route/gradient)
  – Ride duration
  – Riding modes
  – User behavior (personal effort)
  – Total weight (rider, eBike, luggage)

– Motor cover on the drive unit
– Heat dissipation properties of the bicycle frame
– Type of drive unit and type of gear-shifting

▶ **Use only original Bosch eBike batteries from the system generation the smart system that the manufacturer has approved for your eBike.** Using other eBike batteries can lead to injuries and pose a fire hazard. Bosch accepts no liability if other eBike batteries are used.

Safety instructions for the rim magnet

The following safety instructions must be observed when handling the rim magnet:

▶ **Warning of very strong magnetic fields: The rim magnet generates a very strong magnetic field that may influence the magnetic storage media (e.g. credit card) and electronic devices (e.g. clock). There is a risk of data loss and damage to devices.** Do not move any media or devices sensitive to magnetic fields into the immediate vicinity of the rim magnet.

▶ **Warning of hand injuries caused by parts attracted to the magnet: There is a risk of injury if your fingers or hands get caught between the magnet and the objects attracted to it. This may cause skin injuries (e.g. if metal chips are attracted), crushing injuries, contusions or fractures.** You can avoid these by being vigilant and wearing suitable protective clothing.

▶ **Danger to persons with implants and other medical devices, e.g. pacemakers, defribrillators or insulin pumps:**
Keep these away from the immediate vicinity of the rim magnet.

– The magnet creates a field which can impair the function of implants and medical devices.
– To avoid impairments, the rim magnet should not be held directly in front of the chest.
– A minimum distance of 30 cm to the chest should be maintained.

▶ **Observe all national regulations which set out the approved use of eBikes.**

▶ **Please observe all local, state and federal regulations when registering and using eBikes.**

Privacy notice

When connecting the eBike to the **Bosch Diagnostic-Tool 3** or when exchanging eBike components, technical information about your eBike (e.g. manufacturer, model, bike ID, configuration data) as well as regarding the use of the eBike (e.g. total travel time, energy consumption, temperature) is transmitted to Bosch eBike Systems (Robert Bosch GmbH) for processing your request, in service cases and for the purposes of product improvement. More information on data processing can be found at www.bosch-ebike.com/privacy-full.

Product description and specifications

Intended use

The Bosch drive unit from the system generation **the smart system** is intended exclusively for driving your eBike and must not be used for any other purpose.

In addition to the functions outlined here, changes to software relating to troubleshooting and functional modifications may be introduced at any time.

Technical data

Drive unit		Drive Unit Performance Line CX/Cargo/ CX Race Edition/Speed
Product code		BDU3740 BDU3741 BDU3742[A)] BDU3743[A)] BDU3760 BDU3761 BDU3780 BDU3781
Continuous rated power	W	250
Torque at drive, max.	Nm	85
Rated voltage	V	36
Operating temperature	°F	23 to 104
Storage temperature	°F	50 to 104
Protection rating		IP54
Weight, approx.	lbs	6.6

A) Not compatible with the rim magnet

Bosch eBike Systems uses FreeRTOS (see www.freertos.org).

Bicycle lights[A)]		
Voltage approx.	V	12
Maximum power	W	18

A) Depends on legal regulations, not possible in all country-specific models via the eBike battery

Inserting a bulb incorrectly can cause it to blow.

Details on noise emissions on the drive unit

The A-rated emission sound pressure level for the drive unit is < 70 dB(A) in standard operating mode. If the eBike is moved without authorization, the drive unit generates an alarm tone as a key feature of the **<eBike Alarm>** service. This alarm tone may exceed the emission sound pressure level of 70 dB(A) and is 80 dB(A) two meters away from the drive unit. The alarm tone is only available after activating the **<eBike Alarm>** service and can be deactivated again via the **eBike Flow** app.

Assembly

Checking the speed sensor (see figure A)

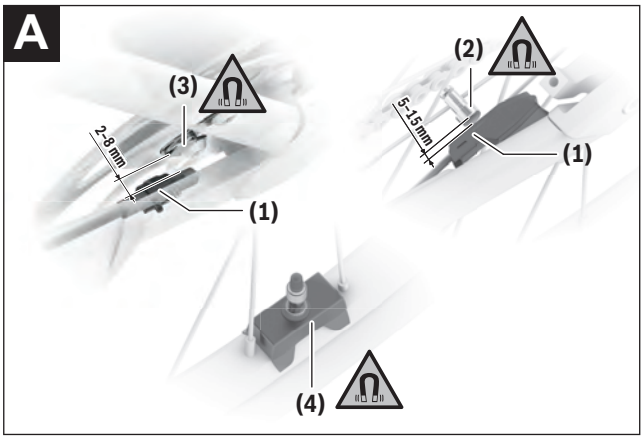

(1) Speed sensor [a)]

(2) Spoke magnet

(3) CenterLock magnet [b)]

(4) Rim magnet

a) Different sensor shape and installation position possible

b) a different installation position is possible

Speed Sensor (slim)

The speed sensor **(1)** and its CenterLock magnet **(3)** or spoke magnet **(2)** are mounted ex works in such a manner that the magnet, after a turn of the wheel, moves past the speed sensor with a clearance of at least 2 mm, yet no more than 15 mm.

The correct distance between the magnet and sensor must be maintained (see figure **A**) if design changes are made.

Notes: Ensure that you do not damage the sensor or sensor bracket when fitting or removing the rear wheel.

When changing a wheel, make sure that the sensor cable is routed so that it is not under tension and has no kinks.

The CenterLock magnet **(3)** can only be removed and reinserted up to five times.

Rim magnet

Note: The rim magnet's alignment with the rim must not be changed (see figure **A**).

If a rim magnet is installed, no sensor is required to detect a wheel turn. The drive unit itself detects when the magnet is close to it and calculates the speed and any other data required from the frequency of the emergence of the magnetic field.

Since the drive unit is sensitive to magnetic fields, avoid other magnetic fields in the vicinity of the drive unit (e.g. magnetic clipless pedals, magnetic cadence sensors, magnetic or magnetized tools, etc.) in order to prevent disruption to the drive unit.

Operation

An operating unit from the system generation **the smart system** is required for starting operation of the eBike. Observe the operating instructions for the operating unit and additional components from the system generation **the smart system** where necessary.

Notes on cycling with your eBike

Note: The eBike system **always** starts in **OFF** mode for drive units with a maximum speed of more than **20 mph**.

When does the drive take effect?

The drive assists your cycling only when you are pedaling. If you do not pedal, the assistance will not work. The drive output always depends on the pedaling force and cadence that you apply.

With a lower force applied or a less frequent cadence, the assistance provided will be lower than that supplied at a higher force or a more frequent cadence. This applies irrespective of the riding mode.

The drive automatically switches off at speeds over **20/28 mph**. When the speed falls below **20/28 mph**, the drive automatically becomes available again.

An exception applies to the push assistance function, in which the eBike can be pushed at low speed without pedaling. The pedals may rotate when the push assistance is in use.

You can also use the eBike as a normal bicycle without assistance at any time, either by switching off the eBike or by setting the riding mode to **OFF**. The same applies when the eBike battery is drained.

Interaction of the drive unit with the gear-shifting

You should shift through gears on an eBike in the same manner as when using a normal bicycle (observe the operating instructions of your eBike with regard to this point).

Irrespective of the type of gear shifting, it is advisable that you briefly reduce the pressure on the pedals when changing gear. This will aid gear shifting and reduce wear on the powertrain.

By selecting the correct gear, you can increase your speed and range while applying the same amount of force.

Gaining initial experience

We recommend that you gain initial experience with the eBike away from busy roads.

Test the various riding modes. Start in a riding mode with a small amount of assistance. As soon as you feel confident, you can ride your eBike in traffic like any other bicycle.

Test the range of your eBike in different conditions before planning longer and more demanding trips.

Influences on range

It is not possible to calculate the range accurately before and during a trip because the range is affected by a number of factors.

Enter the factors in the Range Assistant in order to better assess the effects on the range.

Scan the code provided to open the Range Assistant.

Maintenance/Cleaning

⚠ WARNING

- **Do not open any of the components. Service should only be carried out at an authorized Bosch eBike dealer.** Failure to follow above warning can cause death or serious injury. Refer to your bicycle manual or component manual for all non-Bosch drive system components.
- **Always remove the battery pack before performing any bicycle inspection, maintenance or repair.** Failure to remove the battery pack before performing bicycle inspection, maintenance or repair can lead to serious injury.
- **If you suspect that something is loose, do not ride your bike.** See your Bosch eBike dealer, only a qualified service provider should perform work on your Bosch Drive System. All nuts, bolts, screws require the correct tightening force. Too little force and the fastener may not hold securely. Too much force and the fastener can strip threads, stretch, deform or break. Either way, incorrect tightening force can result in component failure, which can cause you to lose control and fall.
- **If replacing your battery, buy only a genuine Bosch battery pack from an approved source. See your Bosch eBike dealer for original Bosch parts.**
- **Always switch the battery pack off, when inserting or removing it from the holder.** Never attempt to insert or remove the battery pack while riding the bike.
- **Do not charge or use your eBike in any area with a potentially explosive atmosphere, such as at a fueling area, or in areas where the air contains chemicals or particles (such as grain, dust, or metal powders).** Obey all signs and instructions.
- **Do not submerge your eBike components in water, or wash with pressurized hose.** Your Bosch drive unit is designed to be water tight to rain water or non-pressure hose washing.
- **Note down the manufacturer and the number of the key.** In case of loss of the keys, please refer to an authorised Bosch eBike dealer. Please provide the name of the manufacturer and the number of the key.
- **Do not apply any cleaning agents, paint or chemicals to any components of the Bosch drive system as they may cause premature failure of the component.**

When changing the bulbs, ensure that they are compatible with the Bosch eBike system of the generation **the smart system** (ask your bicycle retailer) and are suitable for the specified voltage. Bulbs must only be replaced with bulbs of the same voltage.

All components fitted to the drive unit and all other components of the drive (e.g. chainring, chainring receptacle, pedals, cranks) must only be replaced with identical components or components that have been specifically approved by the manufacturer for your eBike. This will protect the drive unit from overloading and becoming damaged.

Keep the drive unit clean and avoid contact with aggressive substances and fuels, e.g. diesel. Take care when cleaning the drive unit.

Cleaning

▶ **Do not submerge your eBike components in water, or wash with pressurized hose.** Your Bosch drive unit is designed to be water tight to rain water or non-pressure hose washing.

Keep all components of your eBike clean, especially the battery pack contacts and corresponding holder contacts. All components including the drive unit may not be immersed in water or cleaned with a high-pressure cleaner. Clean them carefully with a soft, damp cloth (using only mild soap and water).

Taking care of your eBike

Please observe the operating and storage temperatures of the eBike components. Protect the drive unit, on-board computer and eBike battery against extreme temperatures (e.g. from intense sunlight without adequate ventilation). Extreme temperatures can cause the components (especially the eBike battery) to become damaged.

Have your eBike checked by an expert at least once a year (including mechanical parts, up-to-dateness of system software).

Please have your eBike serviced and repaired by an authorized bicycle dealer.

After-sales service and advice on using products

If you have any questions about the eBike and its components, contact an authorized bicycle retailer.

For contact details of authorized bike dealerships, please visit www.bosch-ebike.com.

More information about the eBike components and their functions can be found in the Bosch eBike Help Center.

Disposal



The drive unit, on-board computer incl. operating unit, eBike battery, speed sensor, accessories and packaging should be disposed of in an environmentally correct manner.

Do not dispose of eBikes and their components with household waste.

Please return Bosch eBike components that are no longer usable, free of charge, to an authorized bicycle dealer or a recycling center.

Subject to change without notice.

Robert Bosch GmbH
72757 Reutlingen
Germany

www.bosch-ebike.com

0 275 U07 3D1 (2024.03) T / 32

Performance Line CX | CX Race Limited Edition | Performance Line Speed | Cargo Line

Owner's Manual
Drive Unit

BDU3840 | BDU3880



en Original operating instructions

This manual contains important safety, performance and service information. Read and understand it along with the information provided to you by your bicycle manufacturer before using the product, and keep it for reference.

Performance Line CX | Performance Line Speed

Table of Contents

Introduction 2
About Warnings 2
General Warnings 2
Using your Manual 3
Operating your Bosch Drive Unit 4
Safety instructions 4
Product description and specifications 6
Assembly 7
Operation 8
Maintenance/Cleaning 9
Cleaning 10
Taking care of your eBike 10
After-sales service and advice on using products 10
Disposal 10

Introduction

Some content is published under license from the **PeopleForBikes Coalition, LTD**.

About Warnings

This manual contains many **DANGER**, **WARNING** and **CAUTION** indicators concerning the consequences of failure to use, assemble, maintain, store, inspect and dispose of a Bosch-equipped eBike in a safe manner.

– The combination of the safety alert symbol and the word **DANGER** indicates a hazardous situation that, if not avoided, will result in death or serious injury.
– The combination of the safety alert symbol and the word **WARNING** indicates a hazardous situation that, if not avoided, could result in death or serious injury.
– The combination of the safety alert symbol and the word **CAUTION** indicates a hazardous situation that, if not avoided, could result in minor or moderate injury.

General Warnings



Read all safety warnings and all instructions. Failure to follow the warnings and instructions may result in death, property damage or serious injury.

Save all safety warnings and instructions for future reference.

The term **eBike battery** used in these operating instructions refers to all original Bosch eBike batteries from the system generation **the smart system**.

▶ **Read ALL accompanying manuals before riding the bike for the first time.** Your Bosch Drive System comes with additional manuals and documents provided by the manufacturer of the bicycle and other components. Failure to read and understand safety information can result in death or serious injury.

⚠ WARNING

▶ **This manual contains important safety, performance and service information.** Read it before you take the first ride on your new bicycle, and keep it for reference. The manual can also be found online at www.bosch-ebike.com.

▶ **This manual is intended to be read together with the separate user manual provided with your bicycle.** Be sure to read all provided documents including labels on the product before your first ride.

▶ **Take responsibility for your own SAFETY.** If you have any questions or do not understand something, consult with your dealer or the bicycle or component manufacturer.

▶ **Some eBike accessories may present a choking hazard to small children.** Keep these accessories away from children.

⚠ CAUTION

▶ **The Bosch Drive System adds weight to your bicycle which you may not be used to lift.** Avoid injury, use proper lifting techniques.

Using your Manual

In addition to the functions outlined here, changes to software relating to troubleshooting and functional modifications may be introduced at any time.

Graphics

The bicycle shown in this manual may differ slightly from your bicycle, but will be similar enough to help you understand our instructions.

RIGHT-HAND and LEFT-HAND sides are determined by facing in the direction the bicycle will travel when going forward. When you see a broken line (------), the item referred to is hidden from view.

Operating your Bosch Drive Unit

Safety instructions



Read and understand all safety warnings and instructions. Failure to follow the below warnings could result in death or serious injury.

Save all safety warnings and instructions for future reference.

The term **eBike battery** used in these operating instructions refers to all original Bosch eBike batteries from the system generation **the smart system**.

The terms **drive** and **drive unit** used in these operating instructions refer to all original Bosch drive units from the system generation **the smart system**.

- ▶ **Read and observe the safety warnings and instructions in all operating instructions of the eBike components and your eBike.**
- ▶ **It is recommended that you periodically review this information to ensure you are following all recommendations for safe use of this product.**
- ▶ **Do not make any kind of modifications to the drive. Do not use any products to increase the performance and/or top speed of the eBike.** Modifying an eBike to increase its performance or speed may be unlawful and can result in component failure or a loss of control, leading to a crash resulting in serious injury or death. A modified eBike may no longer be regulated as an eBike, placing the operator at risk of personal liability and criminal prosecution in the event of a crash. In addition, doing so will generally reduce the service life of the eBike components. The drive unit and eBike may be damaged and guarantee and warranty claims on the eBike you have purchased may consequently be voided.
- ▶ **Do not open the drive unit. The drive unit must be repaired using only original spare parts and only by an authorized bicycle retailer.** This will ensure that the eBike remains safe to use. Unauthorized opening of the drive unit may render warranty claims null and void.
- ▶ **Remove the eBike battery from the eBike before beginning work (e.g. inspection, repair, assembly, maintenance, work on the chain, etc.) on the eBike. When working on permanently installed eBike batteries, take particular care to ensure that the eBike cannot be switched on.** Unintentional activation of the eBike poses a risk of injury.
- ▶ **The eBike can be switched on by pushing the eBike backwards or by turning the pedals backwards.**
- ▶ **Do not remove permanently installed eBike batteries yourself. Permanently installed eBike batteries must only be installed and removed by authorized bicycle retailers.**



Under extreme conditions, such as continuously high loads at low speed when riding up hills or carrying loads, parts of the drive unit can reach temperatures in excess of 140 °F.

- ▶ **After a ride, do not allow your unprotected hands or legs to come into contact with the housing of the drive unit.** Under extreme conditions, such as continuously high torques at low travel speeds, or when riding up hills or carrying loads, very high temperatures may be reached on the housing. Contact with hot components can result in burns if touched.

  The temperatures that may be reached on the drive unit housing are influenced by the following factors:
  – Ambient temperature
  – Ride profile (route/gradient)
  – Ride duration
  – Riding modes
  – User behavior (personal effort)
  – Total weight (rider, eBike, luggage)

– Motor cover on the drive unit
– Heat dissipation properties of the bicycle frame
– Type of drive unit and type of gear-shifting

▶ **Use only original Bosch eBike batteries from the system generation the smart system that the manufacturer has approved for your eBike.** Using other eBike batteries can lead to injuries and pose a fire hazard. Bosch accepts no liability if other eBike batteries are used.

Safety instructions for the rim magnet

The following safety instructions must be observed when handling the rim magnet:

▶ **Warning of very strong magnetic fields: The rim magnet generates a very strong magnetic field that may influence the magnetic storage media (e.g. credit card) and electronic devices (e.g. clock). There is a risk of data loss and damage to devices.** Do not move any media or devices sensitive to magnetic fields into the immediate vicinity of the rim magnet.

▶ **Warning of hand injuries caused by parts attracted to the magnet: There is a risk of injury if your fingers or hands get caught between the magnet and the objects attracted to it. This may cause skin injuries (e.g. if metal chips are attracted), crushing injuries, contusions or fractures.** You can avoid these by being vigilant and wearing suitable protective clothing.

▶ **Danger to persons with implants and other medical devices, e.g. pacemakers, defribrillators or insulin pumps:**
Keep these away from the immediate vicinity of the rim magnet.

– The magnet creates a field which can impair the function of implants and medical devices.
– To avoid impairments, the rim magnet should not be held directly in front of the chest.
– A minimum distance of 30 cm to the chest should be maintained.

▶ **Observe all national regulations which set out the approved use of eBikes.**

▶ **Please observe all local, state and federal regulations when registering and using eBikes.**

Privacy notice

When connecting the eBike to the **Bosch Diagnostic-Tool 3** or when exchanging eBike components, technical information about your eBike (e.g. manufacturer, model, bike ID, configuration data) as well as regarding the use of the eBike (e.g. total travel time, energy consumption, temperature) is transmitted to Bosch eBike Systems (Robert Bosch GmbH) for processing your request, in service cases and for the purposes of product improvement. More information on data processing can be found at www.bosch-ebike.com/privacy-full.

Product description and specifications

Intended use

The Bosch drive unit from the system generation **the smart system** is intended exclusively for driving your eBike and must not be used for any other purpose.

In addition to the functions outlined here, changes to software relating to troubleshooting and functional modifications may be introduced at any time.

Technical data

Drive unit		**Drive Unit Performance Line CX/Speed**
Product code		BDU3840 BDU3880
Continuous rated power	W	250
Torque at drive, max.	Nm	85
Rated voltage	V	36
Operating temperature	°F	23 to 104
Storage temperature	°F	50 to 104
Protection rating		IP55
Weight, approx.	lbs	6.2

Bosch eBike Systems uses FreeRTOS (see www.freertos.org).

Bicycle lights[A)]		
Voltage approx.	V	12
Maximum power	W	18

A) Depends on legal regulations, not possible in all country-specific models via the eBike battery

Inserting a bulb incorrectly can cause it to blow.

Details on noise emissions on the drive unit

The A-rated emission sound pressure level for the drive unit is < 70 dB(A) in standard operating mode. If the eBike is moved without authorization, the drive unit generates an alarm tone as a key feature of the **<eBike Alarm>** service. This alarm tone may exceed the emission sound pressure level of 70 dB(A) and is 80 dB(A) two meters away from the drive unit. The alarm tone is only available after activating the **<eBike Alarm>** service and can be deactivated again via the **eBike Flow** app.

Assembly

Checking the speed sensor (see figure A)

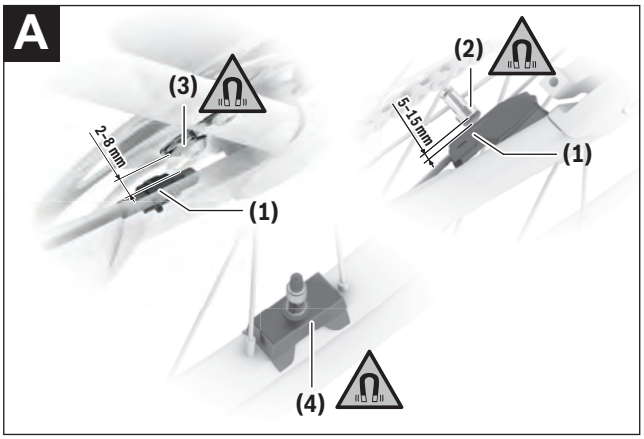

(1) Speed sensor [a)]

(2) Spoke magnet

(3) CenterLock magnet [b)]

(4) Rim magnet

a) Different sensor shape and installation position possible

b) a different installation position is possible

Speed Sensor (slim)

The speed sensor **(1)** and its CenterLock magnet **(3)** or spoke magnet **(2)** are mounted ex works in such a manner that the magnet, after a turn of the wheel, moves past the speed sensor with a clearance of at least 2 mm, yet no more than 15 mm.

The correct distance between the magnet and sensor must be maintained (see figure **A**) if design changes are made.

Notes: Ensure that you do not damage the sensor or sensor bracket when fitting or removing the rear wheel.

When changing a wheel, make sure that the sensor cable is routed so that it is not under tension and has no kinks.

The CenterLock magnet **(3)** can only be removed and reinserted up to five times.

Rim magnet

Note: The rim magnet's alignment with the rim must not be changed (see figure **A**).

If a rim magnet is installed, no sensor is required to detect a wheel turn. The drive unit itself detects when the magnet is close to it and calculates the speed and any other data required from the frequency of the emergence of the magnetic field.

Since the drive unit is sensitive to magnetic fields, avoid other magnetic fields in the vicinity of the drive unit (e.g. magnetic clipless pedals, magnetic cadence sensors, magnetic or magnetized tools, etc.) in order to prevent disruption to the drive unit.

Operation

An operating unit from the system generation **the smart system** is required for starting operation of the eBike. Observe the operating instructions for the operating unit and additional components from the system generation **the smart system** where necessary.

Notes on cycling with your eBike

Note: The eBike system **always** starts in **OFF** mode for drive units with a maximum speed of more than **20 mph**.

When does the drive take effect?

The drive assists your cycling only when you are pedaling. If you do not pedal, the assistance will not work. The drive output always depends on the pedaling force and cadence that you apply.

With a lower force applied or a less frequent cadence, the assistance provided will be lower than that supplied at a higher force or a more frequent cadence. This applies irrespective of the riding mode.

The drive automatically switches off at speeds over **20/28 mph**. When the speed falls below **20/28 mph**, the drive automatically becomes available again.

An exception applies to the push assistance function, in which the eBike can be pushed at low speed without pedaling. The pedals may rotate when the push assistance is in use.

You can also use the eBike as a normal bicycle without assistance at any time, either by switching off the eBike or by setting the riding mode to **OFF**. The same applies when the eBike battery is drained.

Interaction of the drive unit with the gear-shifting

You should shift through gears on an eBike in the same manner as when using a normal bicycle (observe the operating instructions of your eBike with regard to this point).

Irrespective of the type of gear shifting, it is advisable that you briefly reduce the pressure on the pedals when changing gear. This will aid gear shifting and reduce wear on the powertrain.

By selecting the correct gear, you can increase your speed and range while applying the same amount of force.

Gaining initial experience

We recommend that you gain initial experience with the eBike away from busy roads.

Test the various riding modes. Start in a riding mode with a small amount of assistance. As soon as you feel confident, you can ride your eBike in traffic like any other bicycle.

Test the range of your eBike in different conditions before planning longer and more demanding trips.

Influences on range

It is not possible to calculate the range accurately before and during a trip because the range is affected by a number of factors.

Enter the factors in the Range Assistant in order to better assess the effects on the range.

Scan the code provided to open the Range Assistant.

Maintenance/Cleaning

⚠ WARNING

- **Do not open any of the components. Service should only be carried out at an authorized Bosch eBike dealer.** Failure to follow above warning can cause death or serious injury. Refer to your bicycle manual or component manual for all non-Bosch drive system components.
- **Always remove the battery pack before performing any bicycle inspection, maintenance or repair.** Failure to remove the battery pack before performing bicycle inspection, maintenance or repair can lead to serious injury.
- **If you suspect that something is loose, do not ride your bike.** See your Bosch eBike dealer, only a qualified service provider should perform work on your Bosch Drive System. All nuts, bolts, screws require the correct tightening force. Too little force and the fastener may not hold securely. Too much force and the fastener can strip threads, stretch, deform or break. Either way, incorrect tightening force can result in component failure, which can cause you to lose control and fall.
- **If replacing your battery, buy only a genuine Bosch battery pack from an approved source. See your Bosch eBike dealer for original Bosch parts.**
- **Always switch the battery pack off, when inserting or removing it from the holder.** Never attempt to insert or remove the battery pack while riding the bike.
- **Do not charge or use your eBike in any area with a potentially explosive atmosphere, such as at a fueling area, or in areas where the air contains chemicals or particles (such as grain, dust, or metal powders).** Obey all signs and instructions.
- **Do not submerge your eBike components in water, or wash with pressurized hose.** Your Bosch drive unit is designed to be water tight to rain water or non-pressure hose washing.
- **Note down the manufacturer and the number of the key.** In case of loss of the keys, please refer to an authorised Bosch eBike dealer. Please provide the name of the manufacturer and the number of the key.
- **Do not apply any cleaning agents, paint or chemicals to any components of the Bosch drive system as they may cause premature failure of the component.**

When changing the bulbs, ensure that they are compatible with the Bosch eBike system of the generation **the smart system** (ask your bicycle retailer) and are suitable for the specified voltage. Bulbs must only be replaced with bulbs of the same voltage.

All components fitted to the drive unit and all other components of the drive (e.g. chainring, chainring receptacle, pedals, cranks) must only be replaced with identical components or components that have been specifically approved by the manufacturer for your eBike. This will protect the drive unit from overloading and becoming damaged.

Keep the drive unit clean and avoid contact with aggressive substances and fuels, e.g. diesel. Take care when cleaning the drive unit.

Cleaning

- **Do not submerge your eBike components in water, or wash with pressurized hose.** Your Bosch drive unit is designed to be water tight to rain water or non-pressure hose washing.

Keep all components of your eBike clean, especially the battery pack contacts and corresponding holder contacts. All components including the drive unit may not be immersed in water or cleaned with a high-pressure cleaner. Clean them carefully with a soft, damp cloth (using only mild soap and water).

Taking care of your eBike

Please observe the operating and storage temperatures of the eBike components. Protect the drive unit, on-board computer and eBike battery against extreme temperatures (e.g. from intense sunlight without adequate ventilation). Extreme temperatures can cause the components (especially the eBike battery) to become damaged.

Have your eBike checked by an expert at least once a year (including mechanical parts, up-to-dateness of system software).

Please have your eBike serviced and repaired by an authorized bicycle dealer.

After-sales service and advice on using products

If you have any questions about the eBike and its components, contact an authorized bicycle retailer.

For contact details of authorized bike dealerships, please visit www.bosch-ebike.com.

More information about the eBike components and their functions can be found in the Bosch eBike Help Center.

Disposal



The drive unit, on-board computer incl. operating unit, eBike battery, speed sensor, accessories and packaging should be disposed of in an environmentally correct manner.

Do not dispose of eBikes and their components with household waste.

Please return Bosch eBike components that are no longer usable, free of charge, to an authorized bicycle dealer or a recycling center.

Subject to change without notice.

Robert Bosch GmbH
72757 Reutlingen
Germany

www.bosch-ebike.com

0 275 U07 3D4 (2024.03) T / 32

Performance Line CX | Performance Line Speed

Owner’s Manual

CompactTube 400
PowerTube 500 | 600 | 625 | 750 | 800
PowerPack Rack 400 | 500
PowerPack Frame 400 | 545 | 725 | 800



en Original operating instructions

This manual contains important safety, performance and service information. Read and understand it along with the information provided to you by your bicycle manufacturer before using the product, and keep it for reference.

CompactTube

BBP3245
BBP3246
BBP3247

PowerTube

BBP3755
BBP3756
BBP3765
BBP3766
BBP3775
BBP3776
BBP3865
BBP3885
BBP3886

PowerPack Rack

BBP3345
BBP3355

PowerPack Frame

BBP3545
BBP3556
BBP3575
BBP3585

Table of contents

Introduction 2
About Warnings 2
General Warnings 2
Using your Manual 3
On-product warning labels 4
Handling the lithium-ion battery pack 7
Safety warnings for Bosch eBike batteries 7
Product description and specifications 10
Fitting 19
Operation 26
Transport 26
Maintenance/cleaning 27
Storing 28
Troubleshooting 29
Battery Recycling Program 30

Introduction

Some content is published under license from the **PeopleForBikes Coalition, LTD**.

About Warnings

This manual contains many **DANGER**, **WARNING** and **CAUTION** indicators concerning the consequences of failure to use, assemble, maintain, store, inspect and dispose of a Bosch-equipped eBike in a safe manner.

– The combination of the safety alert symbol and the word **DANGER** indicates a hazardous situation that, if not avoided, will result in death or serious injury.
– The combination of the safety alert symbol and the word **WARNING** indicates a hazardous situation that, if not avoided, could result in death or serious injury.
– The combination of the safety alert symbol and the word **CAUTION** indicates a hazardous situation that, if not avoided, could result in minor or moderate injury.

General Warnings



Read all safety warnings and all instructions. Failure to follow the warnings and instructions may result in death, property damage or serious injury.

Save all safety warnings and instructions for future reference.

The term **eBike battery** used in these operating instructions refers to all original Bosch eBike batteries from the system generation **the smart system**.

▶ **Read ALL accompanying manuals before riding the bike for the first time.** Your Bosch Drive System comes with additional manuals and documents provided by the manufacturer of the bicycle and other components. Failure to read and understand safety information can result in death or serious injury.

⚠ WARNING

▶ **This manual contains important safety, performance and service information.** Read it before you take the first ride on your new bicycle, and keep it for reference. The manual can also be found online at www.bosch-ebike.com.

▶ **This manual is intended to be read together with the separate user manual provided with your bicycle.** Be sure to read all provided documents including labels on the product before your first ride.

▶ **Take responsibility for your own SAFETY.** If you have any questions or do not understand something, consult with your dealer or the bicycle or component manufacturer.

▶ **Some eBike accessories may present a choking hazard to small children.** Keep these accessories away from children.

⚠ CAUTION

▶ **The Bosch Drive System adds weight to your bicycle which you may not be used to lift.** Avoid injury, use proper lifting techniques.

Using your Manual

In addition to the functions outlined here, changes to software relating to troubleshooting and functional modifications may be introduced at any time.

Graphics

The bicycle shown in this manual may differ slightly from your bicycle, but will be similar enough to help you understand our instructions.

RIGHT-HAND and LEFT-HAND sides are determined by facing in the direction the bicycle will travel when going forward. When you see a broken line (------), the item referred to is hidden from view.

On-product warning labels

A



B



C



D

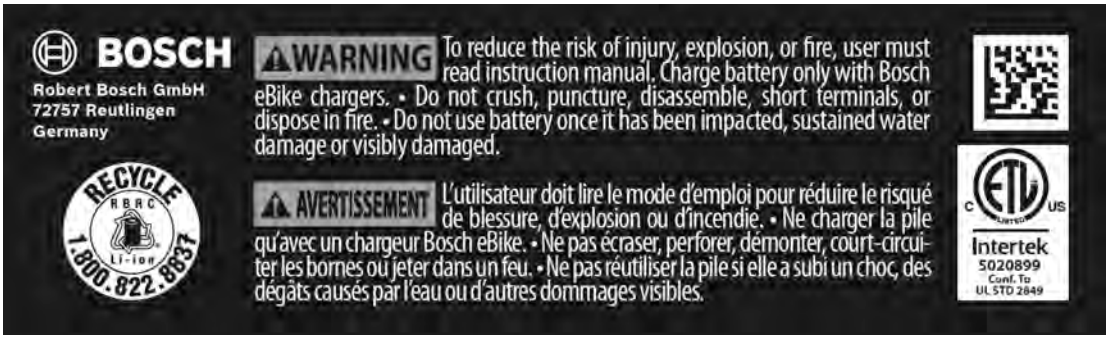
BOSCH
Robert Bosch GmbH
72757 Reutlingen
Germany
RECYCLE
RBRC
Li-ion
1.800.822.8837
WARNING To reduce the risk of injury, explosion, or fire, user must read instruction manual. Charge battery only with Bosch eBike chargers. • Do not crush, puncture, disassemble, short terminals, or dispose in fire. • Do not use battery once it has been impacted, sustained water damage or visibly damaged.
AVERTISSEMENT L'utilisateur doit lire le mode d'emploi pour réduire le risqué de blessure, d'explosion ou d'incendie. • Ne charger la pile qu'avec un chargeur Bosch eBike. • Ne pas écraser, perforer, démonter, court-circuiter les bornes ou jeter dans un feu. • Ne pas réutiliser la pile si elle a subi un choc, des dégâts causés par l'eau ou d'autres dommages visibles.
Intertek
5020899
Conf. To
UL STD 2849

E


BOSCH
Robert Bosch GmbH
72757 Reutlingen
Germany
www.bosch-ebike.com
CE
UK
CA
Li-ion
max.50°C


BOSCH
Robert Bosch GmbH
D-72757 Reutlingen
www.bosch-ebike.com
Intertek
5020899
Conf. To
UL STD 2849
RECYCLE
RBRC
Li-ion
1.800.822.8837
PS
E
Li-ion 20


BOSCH
Robert Bosch GmbH
D-72757 Reutlingen
www.bosch-ebike.com
Intertek
5020899
Conf. To
UL STD 2849
RECYCLE
RBRC
Li-ion
1.800.822.8837
PS
E
Li-ion 20
R3A232
可充電之二次鋰電池組


WARNING To reduce the risk of injury, explosion, or fire, user must read instruction manual. · Do not crush, puncture, dissassemble, short terminals, or dispose in fire. · Do not use battery once it has been impacted, sustained water damage or visibly damaged. · Charge battery only with Bosch eBike chargers.
AVERTISSEMENT L'utilisateur do it lire le mode d`emploi pour réduire le risque de blessure, explosion ou d'incendie. · Ne pas écraser, perforer, démonter, court-circuiter les bornes ou jeter dans un feu. · Ne pas réutiliser la pile si elle a subi una choc, des dégâts causés par l'eau ou d'autres dommages visibles. · Ne charger la pile qu'avec un chargeur Bosch eBike.


警告
使用前に取扱説明書を読むこと
分解、改造、端子の短絡、火気への投入禁止
故障が疑われる時は使用を停止すること
専用充電器を使用すること
경고,警告
주의사항1.사용전반드시사용설명서를읽어주시기바랍니다.
2.비오는날이나가연성폭발물근처에서는사용하지마세요.
可充電之二次鋰電池組 依照說明書指示使用電池，使用專用充電器，廢電池請回收

F



A–C Safety instructions for PowerPack Frame
Note: The depicted labels may differ from the labels on the product.

D Safety instructions for PowerPack Rack

E Safety instructions for PowerTube

F Safety Instructions for CompactTube

▶ **Warning labels have been placed on the Bosch eBike System for your protection. Read and follow the instructions of the labels on the product carefully. If a label becomes illegible or comes off, contact your Bosch bicycle dealer to obtain a replacement.** Replacement safety labels are provided by Bosch at no charge.

Handling the lithium-ion battery pack

Safety warnings for Bosch eBike batteries




Read and understand all safety warnings and instructions. Failure to follow the below warnings could result in death or serious injury.

Save all safety warnings and instructions for future reference.

The term **eBike battery** used in these operating instructions refers to all original Bosch eBike batteries from the system generation **the smart system**.

The terms **drive** and **drive unit** used in these operating instructions refer to all original Bosch drive units from the system generation **the smart system**.

The term **charger** is used in these instructions to mean all original Bosch chargers from the system generation **the smart system**.

- ▶ **Read and observe the safety warnings and instructions in all operating instructions of the eBike components and your eBike.**
- ▶ **It is recommended that you periodically review this information to ensure you are following all recommendations for safe use of this product.** Improper use, storage or charging of the battery can cause thermal runaway leading to a sudden and severe fire resulting in property damage, serious injury or death.
- ▶ **Remove the eBike battery from the eBike before beginning work (e.g. inspection, repair, assembly, maintenance, work on the chain, etc.) on the eBike. When working on permanently installed eBike batteries, take particular care to ensure that the eBike cannot be switched on.** Unintentional activation of the eBike poses a risk of injury.
- ▶ **Do not remove permanently installed eBike batteries yourself. Permanently installed eBike batteries must only be installed and removed by authorized bicycle retailers.**

⚠ DANGER

- ▶ **Do not puncture or crush the battery pack. Do not impact or drop the battery pack or modify it in any way.** Do not use the battery pack if it shows visible damage. Danger of fire or explosion which can cause death or serious injury.



Protect the battery pack against heat (e.g., temperature > 140 °F), fire and immersing into water. Danger of explosion.

⚠ WARNING

- ▶ **Use only original Bosch battery packs approved for your eBike by the manufacturer and purchased from a credible source.** Use of non-approved or counterfeit battery packs can lead to death or serious injury.
- ▶ **Do not open the eBike battery.** There is a risk of short-circuiting.
- ▶ **When the eBike battery is not in use, keep it away from paper clips, coins, keys, nails, screws or other small metal objects that could make a connection from one terminal to another.** A short circuit between the terminals may cause burns or a fire.
- ▶ **Avoid mechanical loads and exposure to high temperatures.** These can damage the battery cells and cause the flammable contents to leak out.
- ▶ **Do not place the charger or the eBike battery near flammable materials. Ensure the eBike battery is completely dry and kept on a clean, dry, flat and non-flammable surface.** There is a risk of fire due to the heat generated during charging. Keep the battery and the charge port connectors (terminals or pins) dry, clean and free of debris.

Make sure the battery and charger have no items covering or placed on top of them.

- ▶ **The eBike battery must not be left unattended while charging, especially overnight.** Once the battery is fully charged, disconnect the charger from the battery. Do not leave the battery connected to the charger for an extended period of time after it has reached full charge.
- ▶ **If used incorrectly, the eBike battery may leak fluid; avoid contact. If contact occurs, rinse off with water. If the liquid comes into contact with your eyes, seek additional medical attention.** Fluid ejected from the battery may cause skin irritation or burns.
- ▶ **eBike batteries must not be subjected to mechanical shock, excessive vibration or excessive weight from objects placed on the battery.** There is a risk of the eBike battery being damaged.
- ▶ **The eBike battery may give off fumes if it becomes damaged or is used incorrectly. Ensure the area is well ventilated and seek medical attention should you experience any adverse effects.** The fumes may irritate the respiratory system.
- ▶ **Do not charge or use your eBike in any area with a potentially explosive atmosphere, such as at a fueling area, or in areas where the air contains chemicals or particles (such as grain, dust, or metal powders).** Obey all signs and instructions.
- ▶ **Only charge the eBike battery using an original Bosch charger from the system generation the smart system.** When using chargers made by other manufacturers, the risk of fire cannot be excluded.
- ▶ **Do not charge or use eBike batteries if they are damaged.** Contact an authorized bicycle dealer.
- ▶ **Use the eBike battery only in conjunction with eBikes from the system generation the smart system.** This is the only way in which you can protect the eBike battery against dangerous overload.
- ▶ **Use only original Bosch eBike batteries from the system generation the smart system that the manufacturer has approved for your eBike.** Using other eBike batteries can lead to injuries and pose a fire hazard. Bosch accepts no liability or warranty claims if other eBike batteries are used.
- ▶ **Keep the battery and charger away from children and animals. Unless supervised or instructed on proper/responsible use, children or people who lack the necessary experience or understanding to operate the battery and charger safely should not be left unattended with the battery and charger.** There is a significant risk of personal injury and/or damage.

The safety of both our customers and our products is important to us. Our eBike batteries are lithium-ion batteries which have been developed and manufactured in accordance with the latest technology. We comply with or exceed the requirements of all relevant safety standards. When damaged, improperly charged or misused, Lithium-Ion batteries are susceptible to an uncontrollable energy release resulting in a sudden and severe fire. A Lithium-Ion battery fire generally cannot be put out until the energy contained therein is exhausted. Therefore, proper use, charging, discharging, care, maintenance, storage and transportation are all critical to the long-term use of the battery and the safety of the user and others.

- ▶ **Do not use the rack-mounted battery as a handle.** Lifting the eBike up by the battery can damage the battery.
- ▶ **Do not touch severely corroded battery terminals. Do not apply solder to the terminals.**
- ▶ **Keep the battery and the charge port connectors (terminals or pins) dry, clean and free of debris. Ensure the battery and charger have no items covering or placed on top of them.**
- ▶ **The battery charge port terminals and/or the charger plug can get contaminated. Repeatedly connecting contaminated terminals can result in worn and damaged terminals.** Clean thoroughly before connecting the charger.

- **Do not touch the terminals of the battery or charger during an electrical storm in case of a lightning strike.**
- **Always follow charger and battery operating, charging and storage temperature.**
- **Do not use a power inverter to charge the battery from a 12-volt automobile auxiliary power outlet in a vehicle.** Incorrect or excessive voltage can result in overheating, which can damage the battery and reduce the battery's lifespan or cause a sudden and severe fire.
- **If the battery becomes too hot, starts to emit smoke, flame or a strong odor, shows any signs of deformation/bulging/leaks or otherwise presents unusual characteristics, discontinue use of the battery.** If a battery exhibits any of these symptoms and is failing catastrophically, evacuate the area immediately and call fire authorities. Only if possible to do so safely and quickly should you attempt to move the battery outdoors and away from people and flammable materials.

Privacy notice

When connecting the eBike to the **Bosch Diagnostic-Tool 3** or when exchanging eBike components, technical information about your eBike (e.g. manufacturer, model, bike ID, configuration data) as well as regarding the use of the eBike (e.g. total travel time, energy consumption, temperature) is transmitted to Bosch eBike Systems (Robert Bosch GmbH) for processing your request, in service cases and for the purposes of product improvement. More information on data processing can be found at www.bosch-ebike.com/privacy-full.

Product description and specifications

Product Features PowerTube 500/625/750

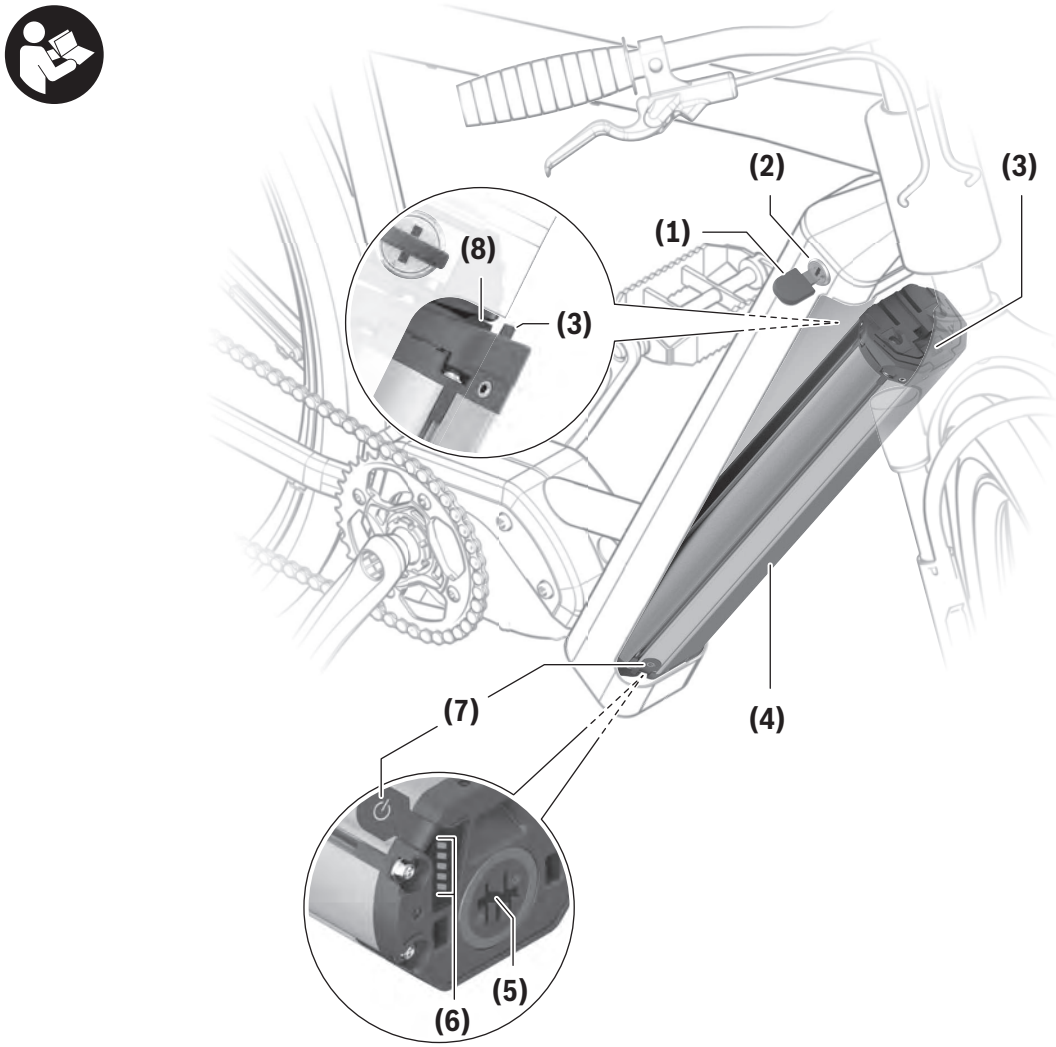

All representations of bike components are schematic and can deviate from your eBike.

(1) Key for the battery lock
(2) Battery lock
(3) PowerTube battery safety hook
(4) PowerTube battery (pivot)
(5) Socket for charging connector
(6) Operation/battery charge indicator
(7) On/off button
(8) PowerTube battery safety restraint

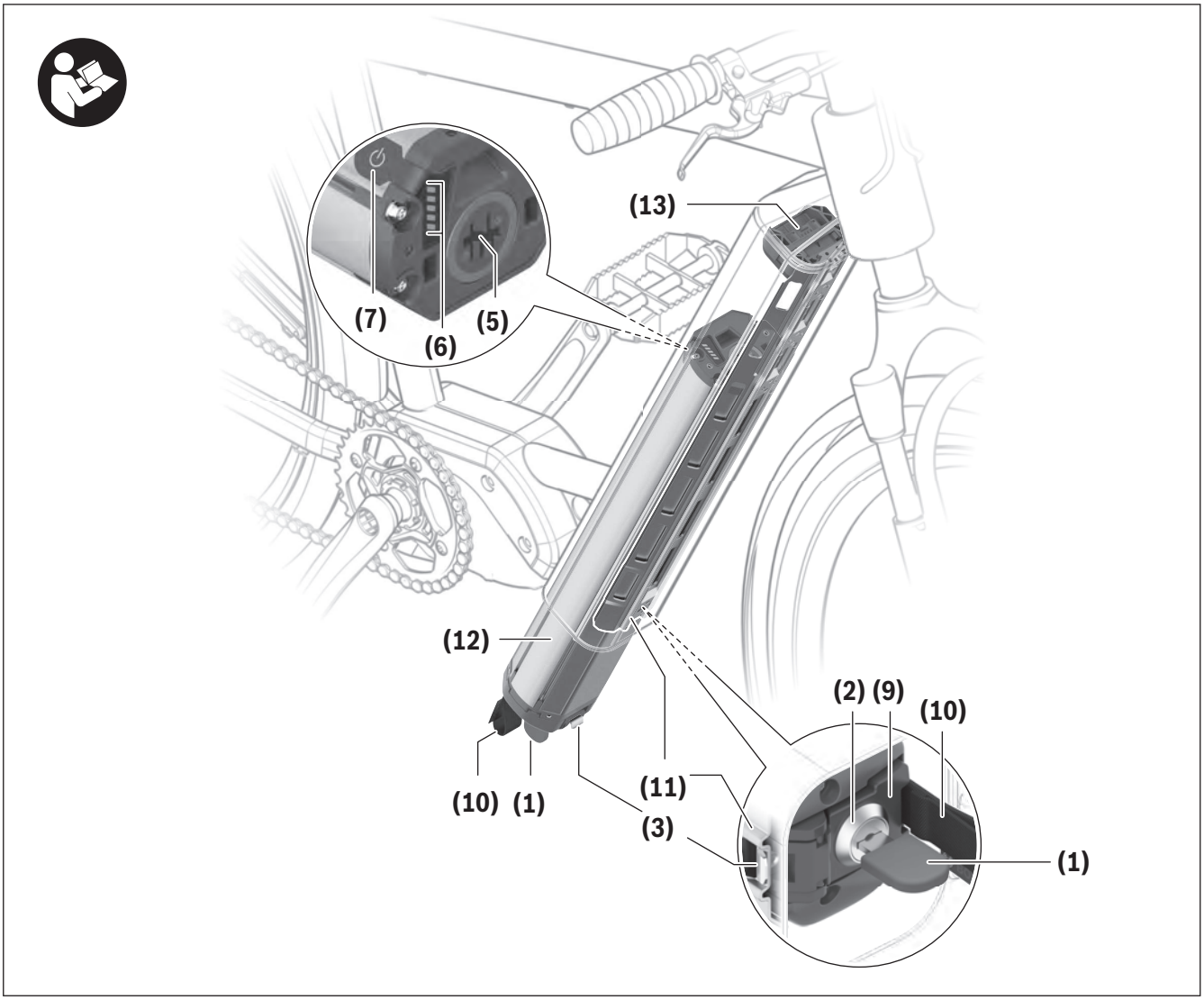

All representations of bike components are schematic and can deviate from your eBike.

(1) Key for the battery lock
(2) Battery lock
(3) PowerTube battery safety hook
(5) Socket for charging connector
(6) Operation/battery charge indicator
(7) On/off button
(9) Locking mechanism
(10) Pull strap
(11) Axial rail
(12) PowerTube battery (axial)
(13) Upper axial PowerTube holder

Product Features PowerTube 600/800

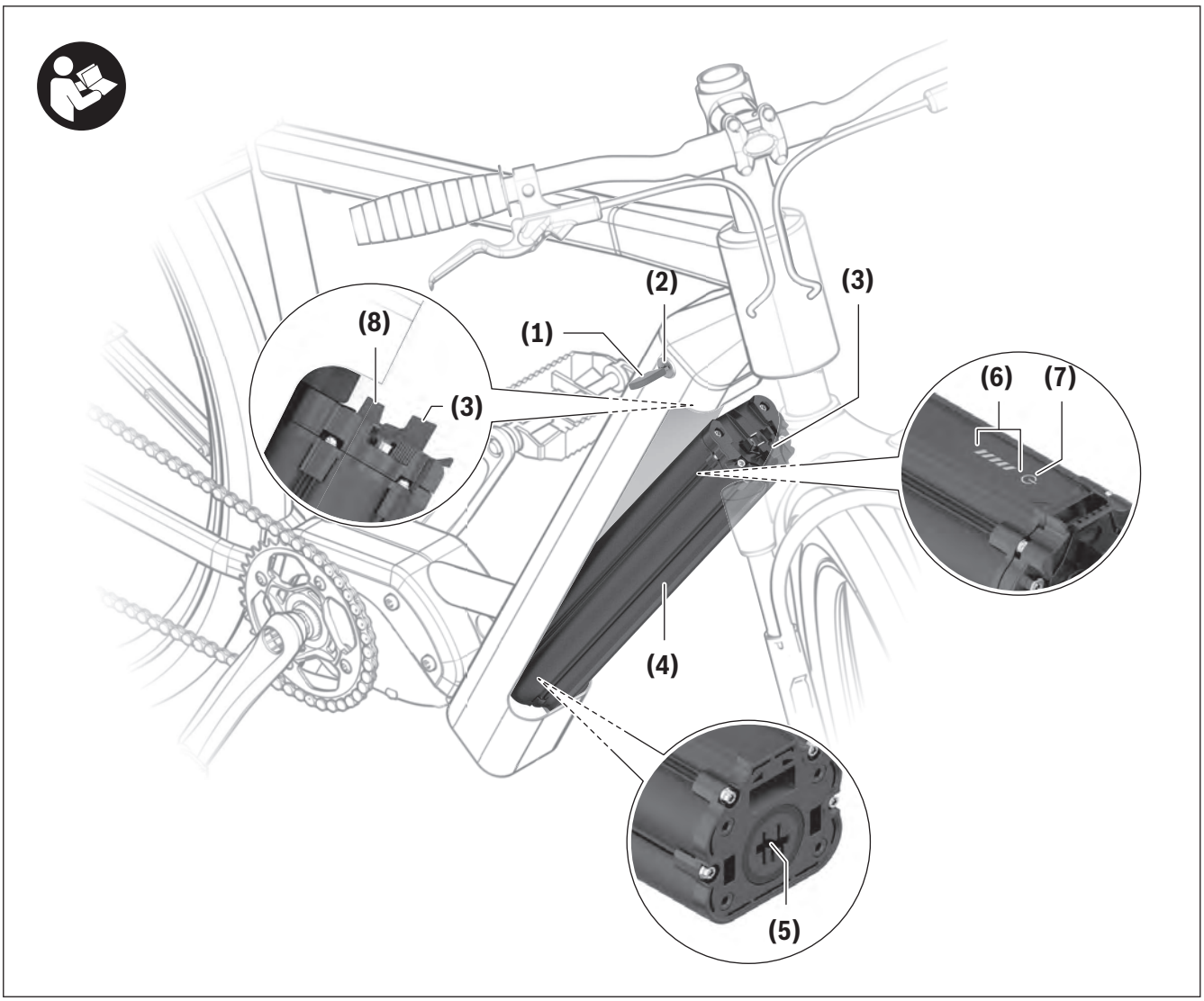

All representations of bike components are schematic and can deviate from your eBike.

(1) Key for the battery lock
(2) Battery lock
(3) PowerTube battery safety hook
(4) PowerTube battery (pivot)
(5) Socket for charging connector
(6) Operation/battery charge indicator
(7) On/off button
(8) PowerTube battery safety restraint

Product Features CompactTube

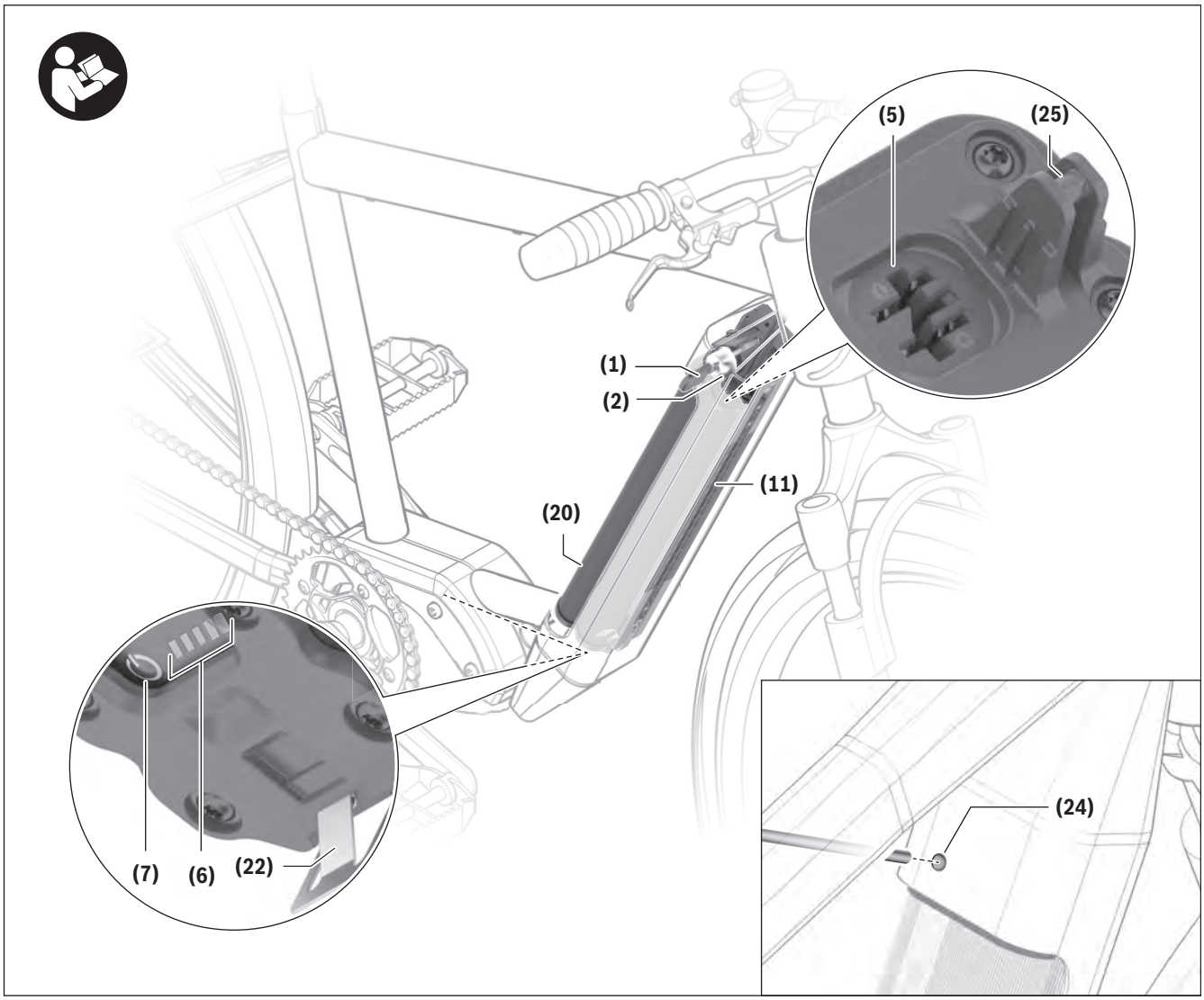

All representations of bike components are schematic and can deviate from your eBike.

(1) Key for the battery lock
(2) Battery lock
(5) Socket for charging connector
(6) Operation/battery charge indicator
(7) On/off button
(9) Locking mechanism
(11) Axial rail
(20) CompactTube battery (pivot)
(22) Safety restraint for CompactTube battery (pivot)
(24) CompactTube unlocking element[a)]
(25) CompactTube holding element

a) Designs may vary

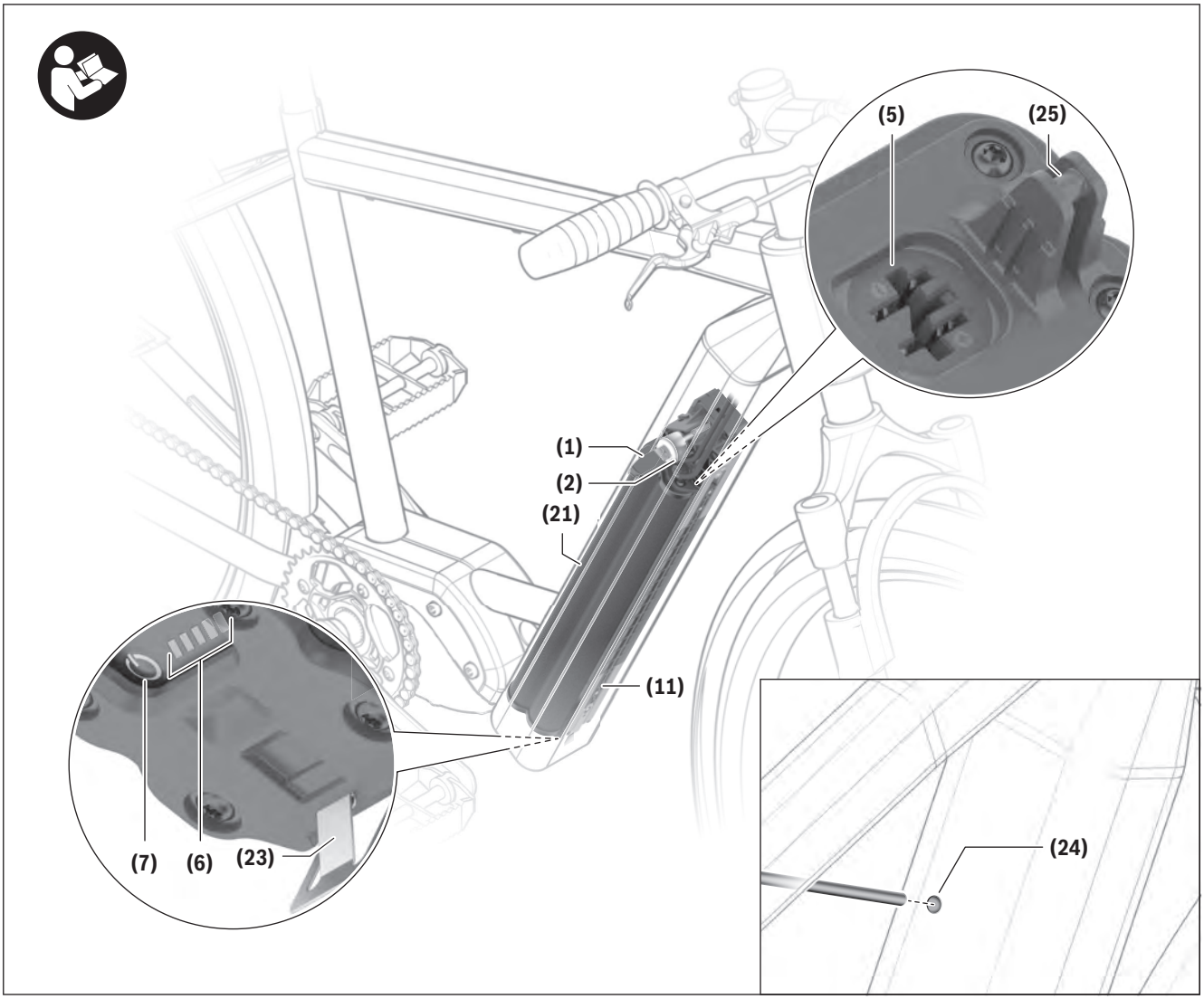

All representations of bike components are schematic and can deviate from your eBike.

(1) Key for the battery lock
(2) Battery lock
(5) Socket for charging connector
(6) Operation/battery charge indicator
(7) On/off button
(9) Locking mechanism
(11) Axial rail
(21) CompactTube battery (axial)
(23) Safety restraint for CompactTube battery (axial)
(24) CompactTube unlocking element[a)]
(25) CompactTube holding element

a) Designs may vary

Product Feature PowerPack Frame

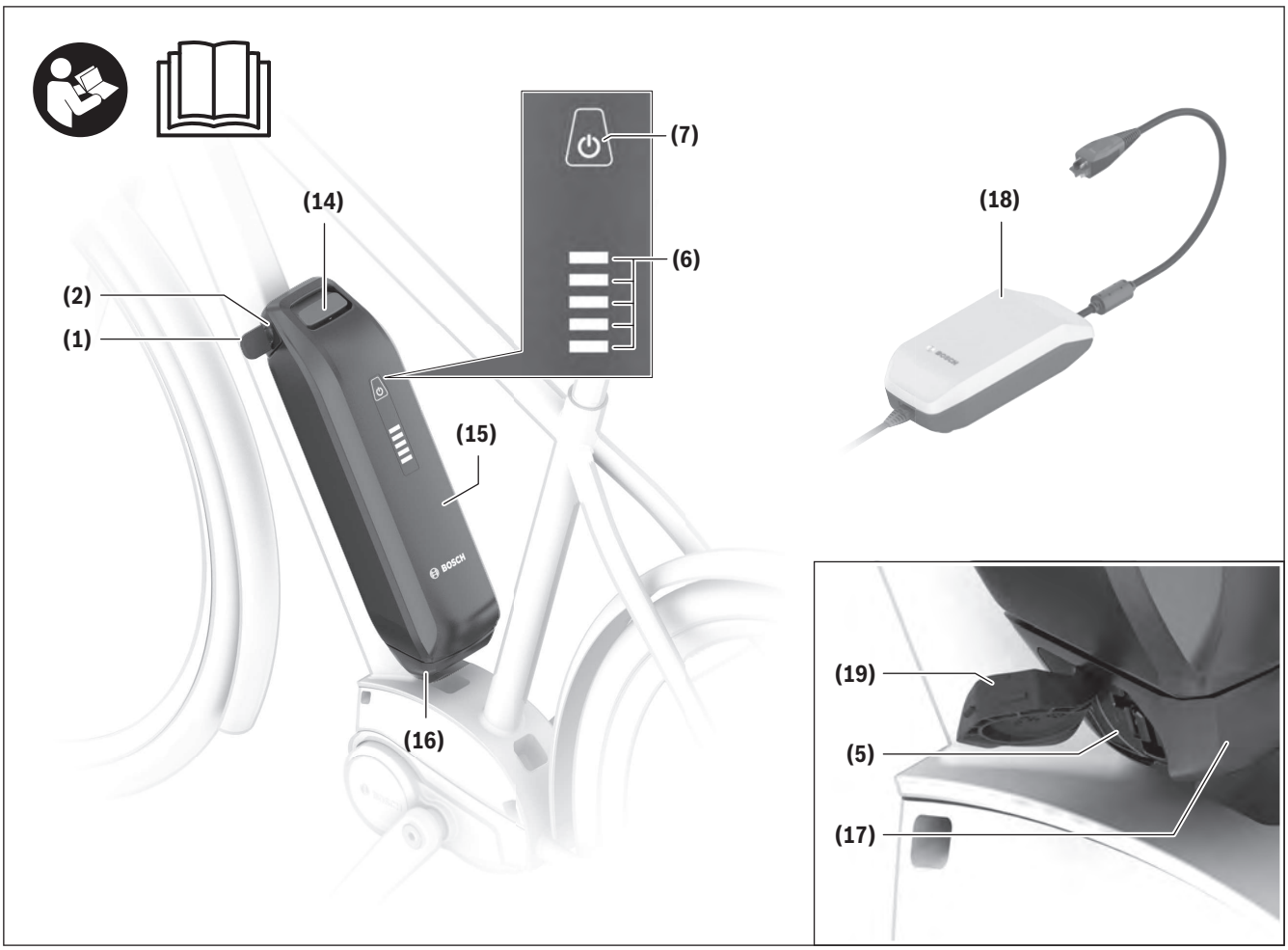

All representations of bike components are schematic and can deviate from your eBike.

(1) Key for the battery lock
(2) Battery lock
(5) Socket for charging connector
(6) Operation/battery charge indicator
(7) On/off button
(14) Upper holder for PowerPack battery
(15) PowerPack battery
(16) Lower holder for PowerPack battery (socket without charging option)
(17) Lower holder for PowerPack battery (socket with charging option)
(18) Charger
(19) Charging socket cover

Product Features PowerPack Rack

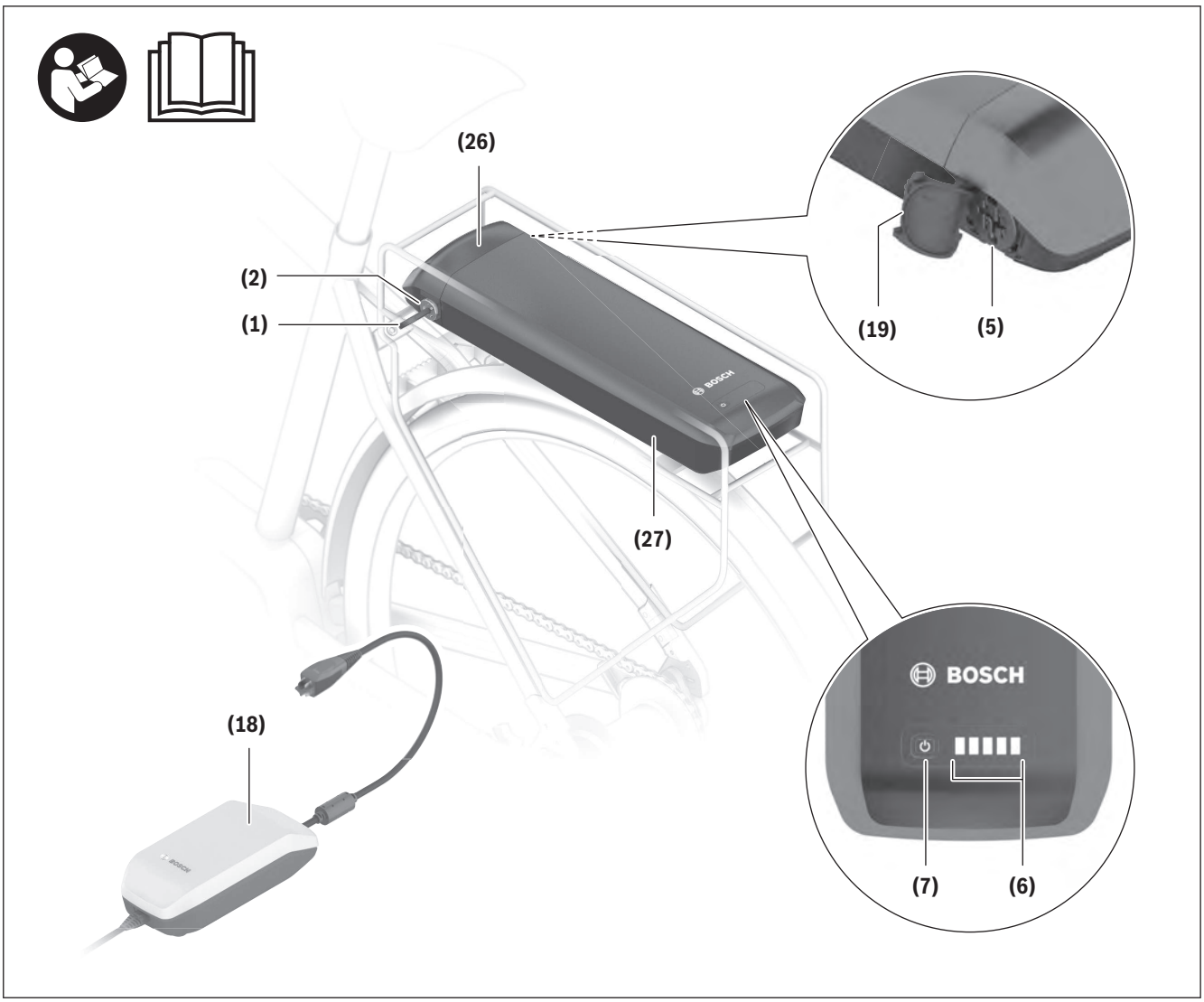

All representations of bike components are schematic and can deviate from your eBike.

(1) Key for the battery lock
(2) Battery lock
(5) Socket for charging connector
(6) Operation/battery charge indicator
(7) On/off button
(18) Charger
(19) Charging socket cover
(26) Rack-mounted battery holder
(27) Rack-mounted battery

Intended Use

The Bosch eBike batteries from the system generation **the smart system** are intended exclusively for the power supply of your drive unit from the system generation **the smart system** and must not be used for any other purpose.

Technical data

Li-ion battery		CompactTube 400	PowerTube 500	PowerTube 600
Product code	Horizontal	BBP3245 BBP3247	BBP3755	BBP3865
Product code	Vertical	BBP3246 BBP3247	BBP3756	–
Rated voltage	V	36	36	36
Nominal capacity	Ah	11.1	13.4	16.7
Energy	Wh	400[A)]	500[A)]	600[A)]
Operating temperature	°F	23 to 104	23 to 104	23 to 104
Storage temperature	°F	50 to 104	50 to 104	50 to 104
Permitted charging temperature range	°F	32 to 104	32 to 104	32 to 104
Weight, approx.	lbs	4.4	6.6	6.6
Protection rating		IP55	IP55	IP55

A) Advertised battery energy capacity is an approximation. Due to manufacturing tolerances measured capacity may not always match the advertised capacity.

Li-ion battery		PowerTube 625	PowerTube 750	PowerTube 800
Product code	Horizontal	BBP3765	BBP3775	BBP3885
Product code	Vertical	BBP3766	BBP3776	BBP3886
Rated voltage	V	36	36	36
Nominal capacity	Ah	16.7	20.1	22.2
Energy	Wh	625[A)]	750[A)]	800[A)]
Operating temperature	°F	23 to 104	23 to 104	23 to 104
Storage temperature	°F	50 to 104	50 to 104	50 to 104
Permitted charging temperature range	°F	32 to 104	32 to 104	32 to 104
Weight, approx.	lbs	7.9	9.6	8.6

Li-ion battery		PowerTube 625	PowerTube 750	PowerTube 800
Protection rating		IP55	IP55	IP55

A) Advertised battery energy capacity is an approximation. Due to manufacturing tolerances measured capacity may not always match the advertised capacity.

Li-ion battery		PowerPack Frame 400	PowerPack Frame 545	PowerPack Frame 725	PowerPack Frame 800
Product code		BBP3545	BBP3556	BBP3575	BBP3585
Rated voltage	V	36	36	36	36
Nominal capacity	Ah	11.1	14.4	19.2	22.2
Energy	Wh	400[A)]	545[A)]	725[A)]	800[A)]
Operating temperature	°F	23 to 104	23 to 104	23 to 104	23 to 104
Storage temperature	°F	50 to 104	50 to 104	50 to 104	50 to 104
Permitted charging temperature range	°F	32 to 104	32 to 104	32 to 104	32 to 104
Weight, approx.	lbs	4.8	6.6	8.4	8.6
Protection rating		IP55	IP55	IP55	IP55

A) Advertised battery energy capacity is an approximation. Due to manufacturing tolerances measured capacity may not always match the advertised capacity.

Li-ion battery		PowerPack Rack 400	PowerPack Rack 500
Product code		BBP3345	BBP3355
Rated voltage	V	36	36
Nominal capacity	Ah	10.8	13.6
Energy	Wh	400[A)]	500[A)]
Operating temperature	°F	23 to 104	23 to 104
Storage temperature	°F	50 to 104	50 to 104
Permitted charging temperature range	°F	32 to 104	32 to 104
Weight, approx.	lbs	5.9	6.1
Protection rating		IP55	IP55

A) Advertised battery energy capacity is an approximation. Due to manufacturing tolerances measured capacity may not always match the advertised capacity.

Fitting

▶ **Ensure the eBike battery is placed on clean surfaces only.** Avoid getting dirt, e.g. sand or soil, in the charging socket and contacts in particular.

Charging the eBike Battery

▶ **A Bosch eBike battery from the system generation the smart system must only be charged using an original Bosch charger from the system generation the smart system.**

Note: The eBike battery is supplied partially charged. To ensure full capacity of the eBike battery, fully charge the battery in the charger before using it for the first time.

To charge the eBike battery, read and follow the instructions in the operating manual for the charger.

The eBike battery can be charged at any state of charge. Interrupting the charging process does not damage the eBike battery.

The eBike battery has a temperature monitoring function that only allows it to be charged within a temperature range of **32 °F** to **104 °F**.



If the temperature of the eBike battery is outside this charging range, three of the LEDs on the battery charge indicator **(6)** will flash. Disconnect the eBike battery from the charger and let it reach the correct temperature range.

⚠ CAUTION

▶ **Do not connect the battery pack to the charger until it has reached the allowable charging temperature.**

Note: If your eBike has a permanently installed eBike battery, you can receive the messages about the status of the eBike battery on the operating unit or on the on-board computer. To do this, read and follow the operating instructions for the operating unit/on-board computer.

Note: At temperatures of around **32 °F**, the start of the charging process for the eBike battery can be delayed by approximately **5** min, once the plug of the charger has been connected to the charging socket on the eBike.

Battery charge indicator outside of the eBike

Note: The eBike battery charge indicator **(6)** switches back off as soon as the eBike battery is switched on.

The five LEDs on the battery charge indicator **(6)** indicate the battery's state of charge when the eBike battery is switched on.

Each LED represents approximately 20 % of the charging capacity. When the eBike battery is fully charged, all five LEDs will be lit.

The eBike battery's state of charge when switched on is also shown on the display of the on-board computer. Read and follow the instructions in the operating instructions for the drive unit and on-board computer.

If the eBike battery's capacity is less than 10 %, the last remaining LED will flash.

Once charging is complete, disconnect the eBike battery from the charger and the charger from the mains.

Inserting and Removing the eBike Battery

▶ **When inserting the battery into the holder or removing it from the holder, always switch off the eBike battery and the eBike beforehand.**

▶ **Once you have inserted the eBike battery, check that it is correctly positioned and secure in all directions.**

▶ **Do not remove the battery from the eBike during the charging process.** If the battery has to be removed, first end the charging process before removing the battery from the eBike, then once the battery is in a proper state for charging, restart the charging process.

Removing the PowerTube Battery (pivot)

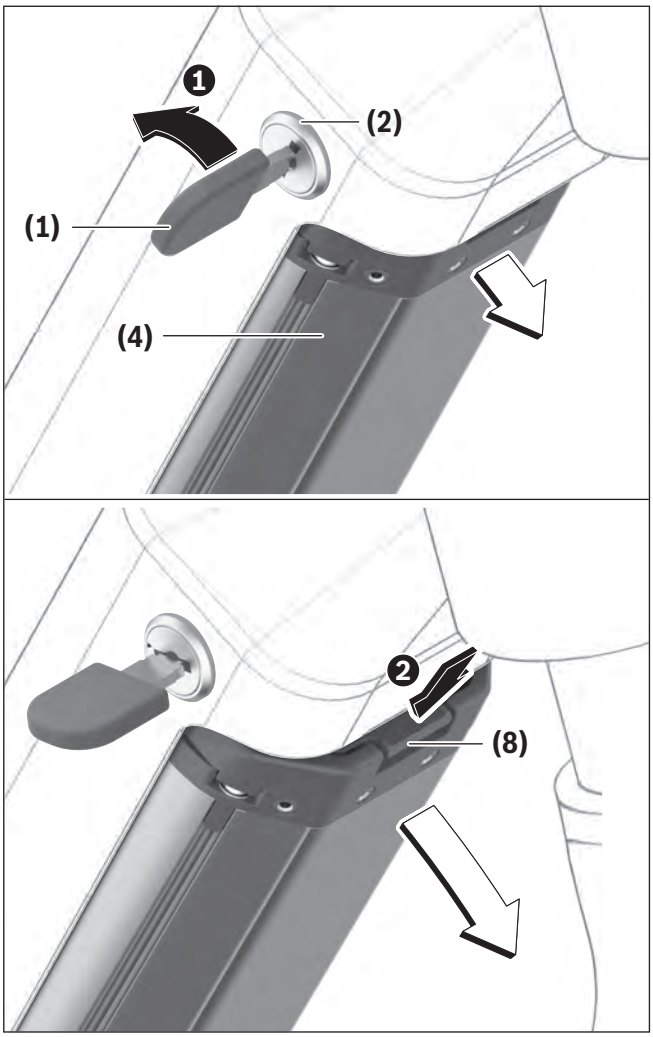

❶ To remove the PowerTube battery **(4)**, open the battery lock **(2)** using the key **(1)**. The battery will be unlocked and fall into the safety restraint **(8)**.

Note: When removing the eBike battery, hold it firmly in your hand.

❷ Hold the battery firmly and press on the safety restraint **(8)** from above. The battery will be unlocked completely and fall into your hand. Then pull the battery out of the frame.

Note: As a result of **varying** designs, the battery may need to be inserted and removed using a different method. Read the eBike manufacturer's operating instructions.

Inserting the PowerTube Battery (pivot) (PT500/625/750)

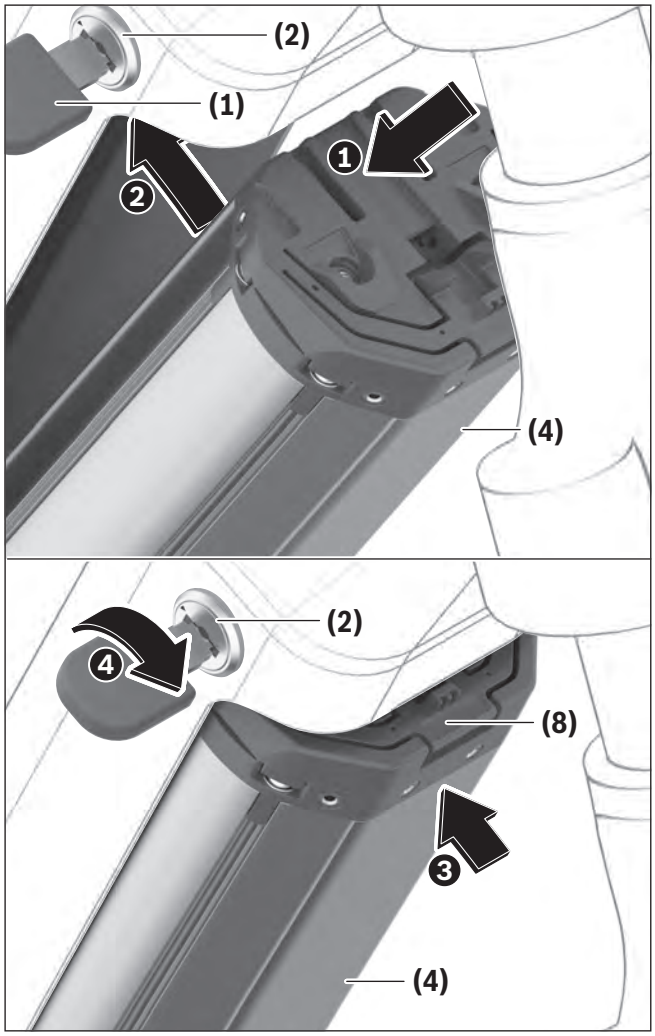

In order for the battery to be inserted, the key **(1)** must be inserted into the battery lock **(2)** and the battery lock must be open.

❶ To insert the PowerTube battery **(4)**, place it so that its contacts are in the lower holder of the frame.

❷ Hold the battery lock open with the key and swivel the battery upwards until it is held by the safety restraint **(8)**.

❸ Release the key and push the battery upwards until it audibly clicks into place.

❹ Always secure the battery by closing the battery lock **(2)** – otherwise the battery lock may open and the battery may fall out of the holder.

Always remove the key **(1)** from the battery lock **(2)** after locking it. This prevents both the key from falling out and the eBike battery from being removed by unauthorized third parties when the eBike is not in use.

Inserting the PowerTube Battery (pivot) (PT600/800)

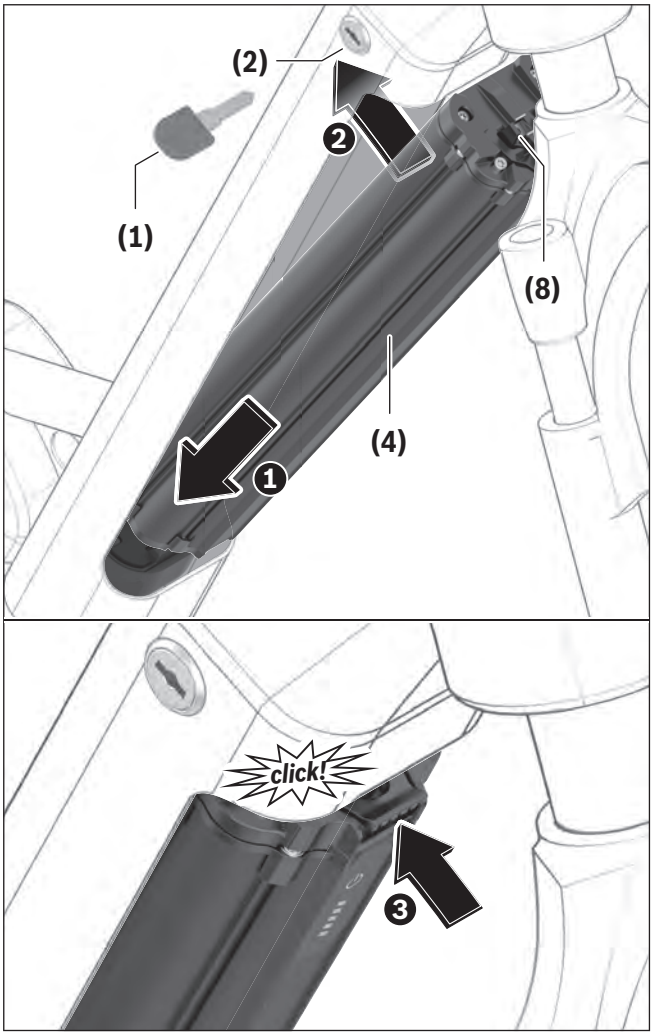

In order for the battery to be inserted, the key **(1)** must be removed from the battery lock **(2)**.

❶ To insert the PowerTube battery **(4)**, place it so that its contacts are in the lower holder of the frame.

❷ Swivel the battery upwards until it audibly clicks into place and is held by the safety restraint **(8)**.

❸ Then push the battery fully into the holder until it audibly clicks into place.

Note: As a result of **varying** designs, the battery may need to be inserted and removed using a different method. Read the eBike manufacturer's operating instructions.

Removing the PowerTube Battery (axial) (PT500/625/750 only)

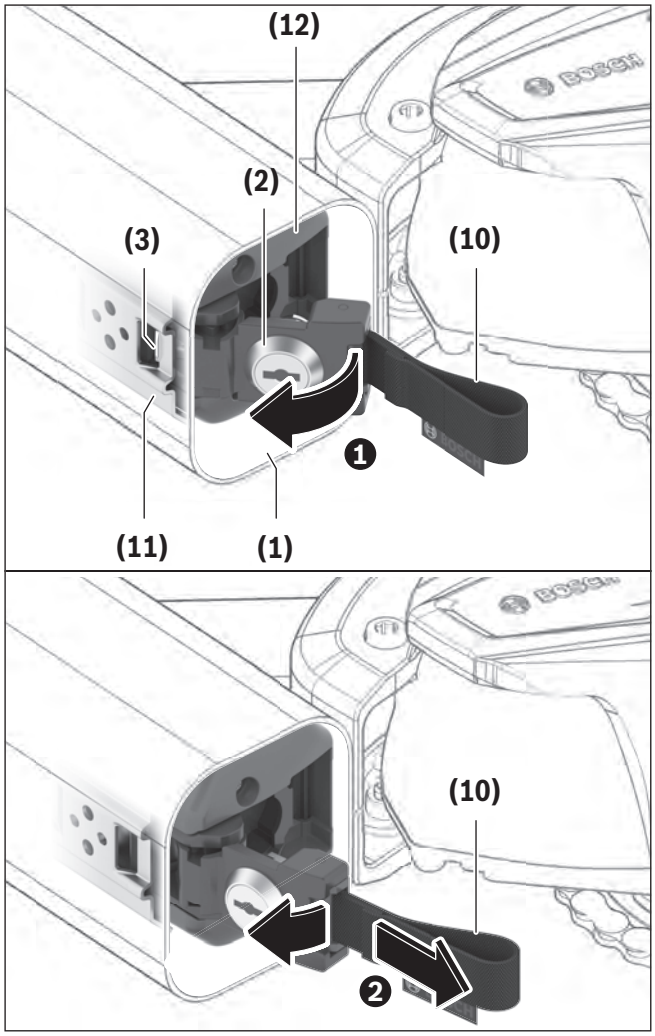

❶ To remove the PowerTube battery **(12)**, open the battery lock **(2)** using the key **(1)** and pull out the key **(1)**.

❷ Use the pull strap **(10)** to pull the battery **(12)** out of the frame and keep hold of it so that it does not fall out of the frame.

Note: As a result of **varying** designs, the battery may need to be inserted and removed using a different method. Read the eBike manufacturer's operating instructions.

Inserting the PowerTube Battery (axial) (PT500/625/750 only)

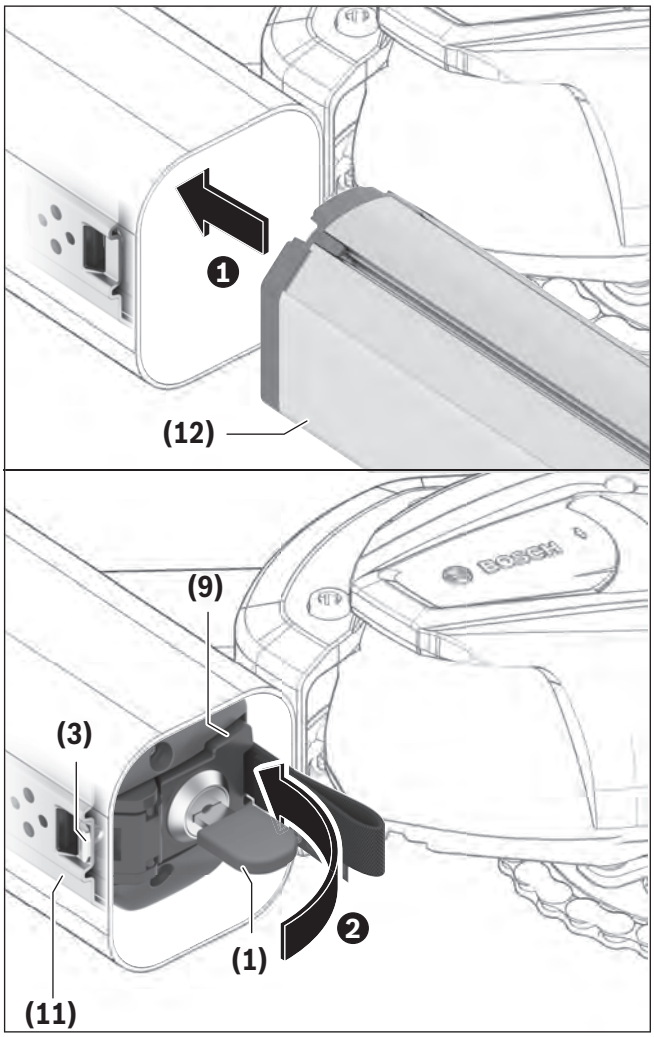

In order for the battery to be inserted, the locking mechanism **(9)** must be folded to the side. At this point, the key **(1)** must not be inserted in the battery lock **(2)**.

❶ To insert the PowerTube battery, insert it into the frame with the socket for the charging connector **(5)** facing upwards until the battery clicks into place. Ensure that the battery is aligned correctly.

❷ Close the locking mechanism **(9)**, insert the key **(1)** into the battery lock **(2)** and lock the battery. Make sure that the safety hook **(3)** is correctly hooked in at the opening of the guide rail **(11)**. Otherwise, there is a risk of the battery falling out while riding.

Always remove the key **(1)** from the battery lock **(2)** after locking it. This prevents both the key from falling out and the eBike battery from being removed by unauthorized third parties when the eBike is not in use.

CompactTube Battery (built-in)

The eBike batteries built-in to the bicycle frame must only be removed in the event of a fault. Contact an authorized bicycle dealer if this happens.

Removing the CompactTube Battery (pivot)

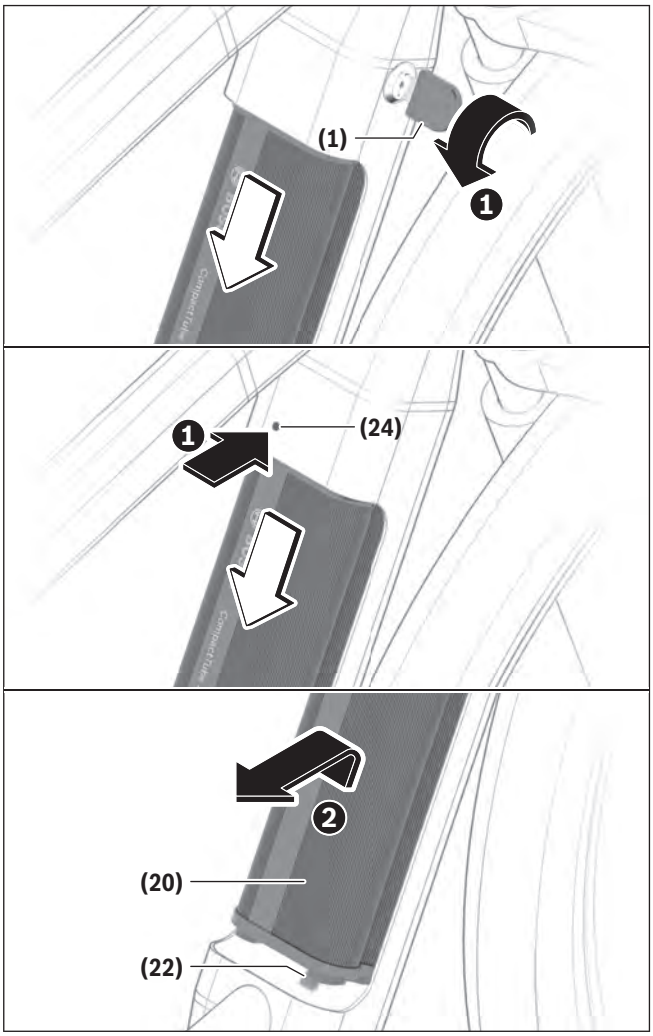

❶ To remove the CompactTube battery **(20)**, open the battery lock **(2)** with the key **(1)** or press on the unlocking element **(24)** with a suitable, non-pointed tool (e.g. a hex key). The battery will be unlocked and fall into the safety restraint **(22)**.

Note: When removing the eBike battery, hold it firmly in your hand.

❷ Hold the battery firmly, gently slide the battery towards the battery lock **(2)** and remove it from the safety restraint **(22)**.

Note: The unlocking element may vary from the image and may be a manufacturer-specific solution.

Read the eBike manufacturer's operating instructions.

Note: As a result of **varying** designs, the battery may need to be inserted and removed using a different method. Read the eBike manufacturer's operating instructions.

Inserting the CompactTube Battery (pivot)

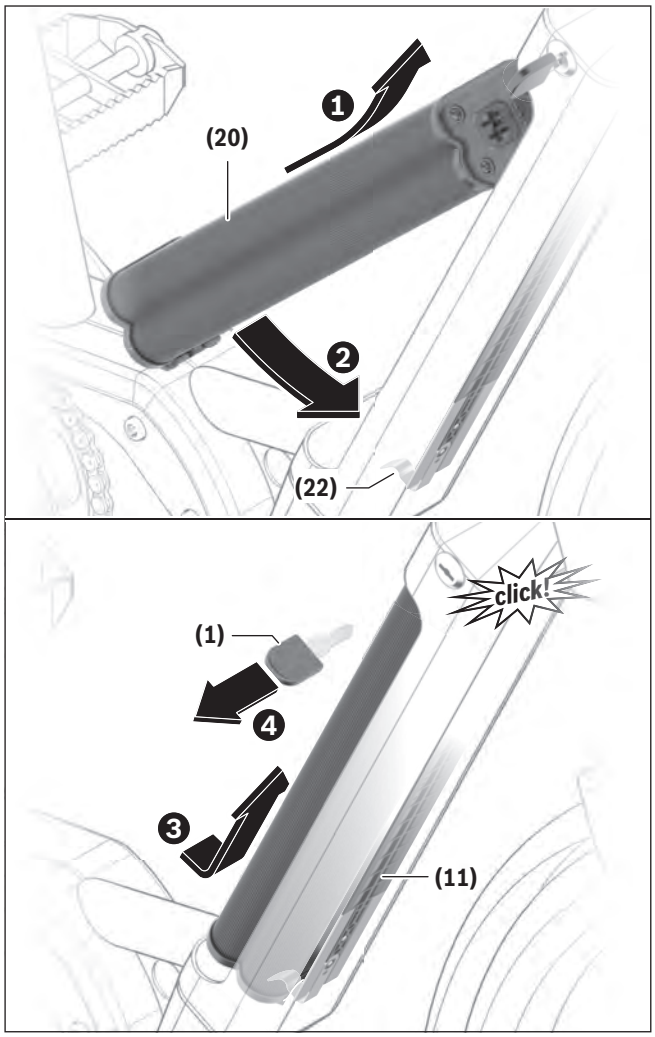

❶ To insert the CompactTube battery **(20)**, place it so that its contacts are in the upper holder of the frame.

❷ Twist the battery in the bicycle frame until it is held by the safety restraint **(22)**.

❸ Push the battery into the guide rail **(11)** and slide it towards the battery lock **(2)** until it audibly clicks into place.

❹ Then remove the key **(1)** from the battery lock **(2)**.

Always remove the key **(1)** from the battery lock **(2)** after locking it. This prevents both the key from falling out and the eBike battery from being removed by unauthorized third parties when the eBike is not in use.

Removing the CompactTube Battery (axial)

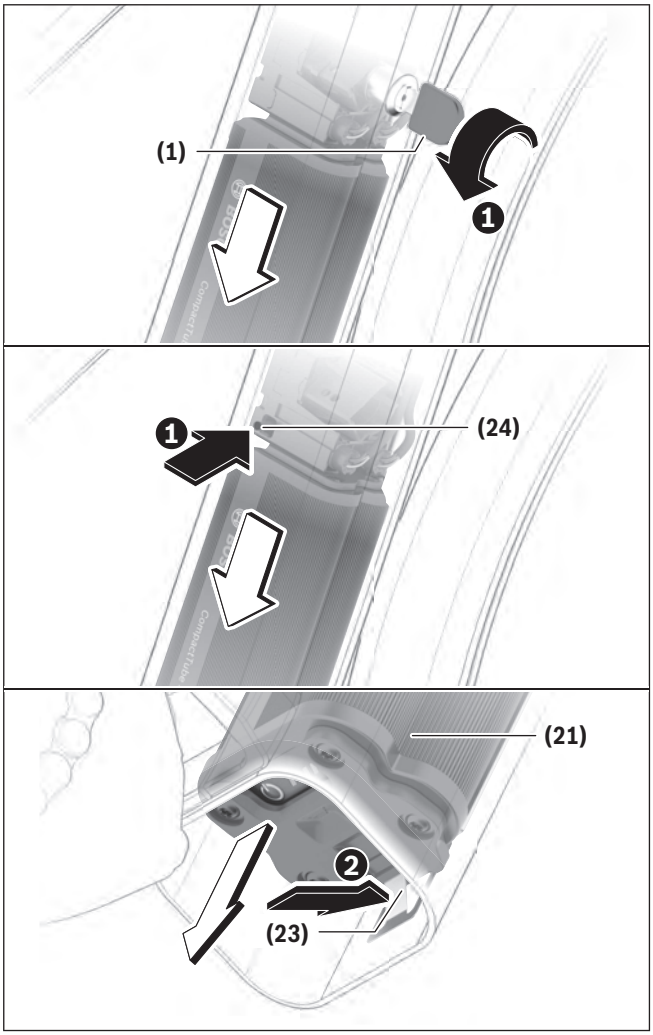

❶ To remove the CompactTube battery **(21)**, open the battery lock **(2)** with the key **(1)** or press on the unlocking element **(24)** with a suitable, non-pointed tool (e.g. a hex key). The battery will be unlocked and fall into the safety restraint **(23)**.

Note: When removing the eBike battery, hold it firmly in your hand.

❷ Press the safety restraint **(23)**. Hold the battery firmly in place if the battery is sliding out of the bicycle frame. Then remove the battery.

Note: The unlocking element may vary from the image and may be a manufacturer-specific solution. Read the eBike manufacturer's operating instructions.

Note: As a result of **varying** designs, the battery may need to be inserted and removed using a different method. Read the eBike manufacturer's operating instructions.

Inserting the CompactTube Battery (axial)

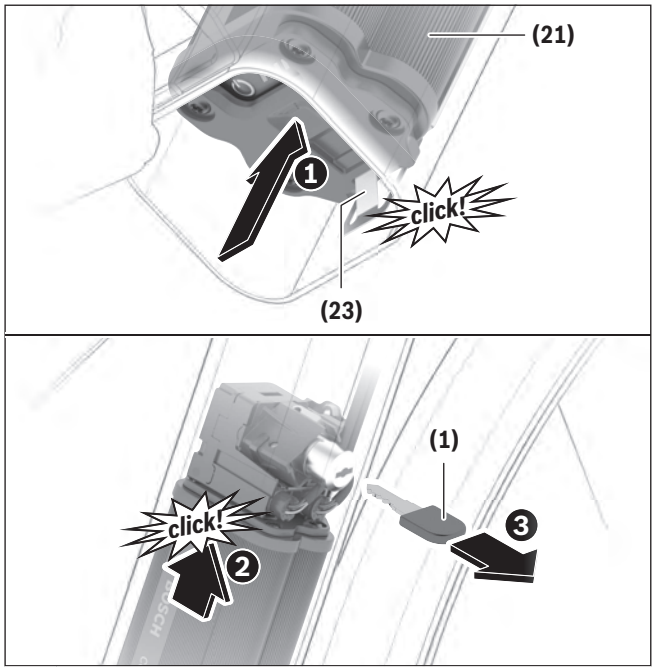

❶ To insert the CompactTube battery **(21)**, insert it into the frame with the socket for the charging connector **(5)** facing upwards until you hear the battery click into place in the safety restraint **(23)**. Ensure that the battery is aligned correctly.

❷ Slide the battery into the battery lock **(2)** until you hear it click into place in the battery lock **(2)**.

❸ Then remove the key **(1)** from the battery lock **(2)**.

Always remove the key **(1)** from the battery lock **(2)** after locking it. This prevents both the key from falling out and the eBike battery from being removed by unauthorized third parties when the eBike is not in use.

Inserting and Removing the PowerPack battery

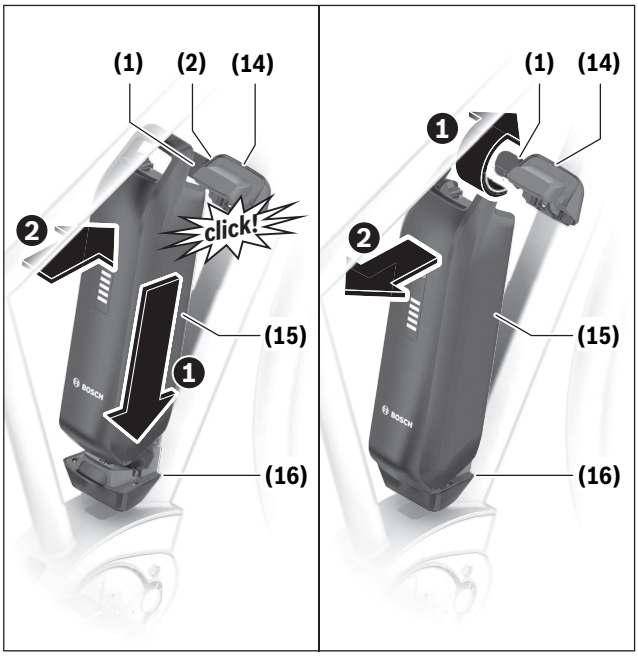

In order to insert the battery, the key **(1)** must not be inserted in the battery lock **(2)**.

❶ To **insert** the PowerPack battery **(15)**, place it so that its contacts are in the lower holder **(16)** on the eBike.

❷ Twist it into the upper holder **(14)** as far as possible until you hear it click into place.

❶ To **remove** the PowerPack battery **(15)**, switch it off and open the battery lock **(2)** using the key **(1)**.

❷ Twist the battery out of the upper holder **(14)** and pull it out of the lower holder **(16)**.

Inserting and Removing the Rack-Mounted Battery

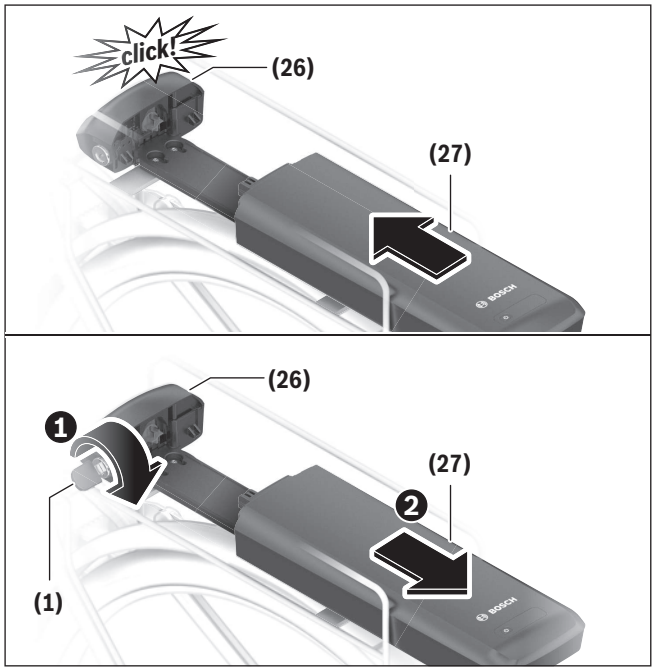

In order for the battery to be inserted, the battery lock **(2)** must be locked. The key **(1)** must not be inserted in the battery lock **(2)**.

To **insert** the battery **(27)**, slide its contacts into the holder **(26)** until you hear it click into place.

To **remove** the battery **(27)**, switch it off and open the battery lock using the key **(1)** ❶.

Pull the battery out of the holder **(26)** ❷.

Operation

Start-up

Switching on/off

Switching on the eBike battery is one way to switch on the eBike (does not apply to permanently installed eBike batteries). To do this, read and follow the instructions in the operating instructions for the drive unit and operating unit.

Before switching on the eBike battery, i.e. the eBike, make sure that the battery lock **(2)** is locked.

To **switch on** the eBike battery, press the on/off button **(7)**. Do not use sharp or pointed objects to press the button.

Note: The eBike battery charge indicator **(6)** switches back off as soon as the eBike battery is switched on.

- ▸ **Always check that the battery pack is locked in place.** To do this, pull on the battery pack (after the key has been removed).

To **switch off** the eBike battery, press the on/off button **(7)** again. This will also switch the eBike off.

If no drive assistance is requested for about **10** minutes (e.g. because the eBike is not moving) and no button is pressed on the on-board computer or the operating unit of the eBike, the eBike will switch off automatically.

The eBike battery is protected against deep discharge, overloading, overheating and short-circuiting by the Battery Management System (BMS). In the event of danger, a protective circuit switches the eBike battery off automatically.



If a fault is detected in the eBike battery, two of the LEDs on the battery charge indicator **(6)** will flash. Contact an authorized bicycle dealer if this happens.

Behavior in the event of a fault

The eBike battery must not be opened, not even for repairs. There is a risk of the eBike battery catching fire, e.g. as a result of a short circuit. This risk continues to apply for any Bosch eBike battery that has **ever** been opened, even at a later point in time.

In the event of a fault, do not have your eBike battery repaired; instead, have your bicycle retailer replace it with an original Bosch eBike battery from the system generation **the smart system**.

Transport

- ▸ **If you transport your eBike attached to the outside of your car, e.g. on a bike rack, remove the on-board computer and the eBike battery (except fixed mount battery) to avoid damaging them.**

The eBike batteries are subject to legislation on the transport of dangerous goods.

When batteries are transported by commercial users or third parties (e.g. air transport or forwarding agency), special requirements on packaging and labeling (e.g. ADR regulations) must be met. When preparing items for shipping, a dangerous goods expert can be consulted as required.

Do not ship or transport a damaged battery or attempt to circumvent laws regarding shipping of Lithium-Ion batteries. Failure to follow this warning may lead to a fire during the transportation process, resulting in serious personal injury or death to transportation workers or the public, and damage to vehicles or transportation facilities for which you may be held civilly and criminally responsible. Use only the original Bosch eBike battery packaging when transporting the eBike battery. Apply tape over exposed contacts and pack the eBike battery such that it cannot move around inside the packaging. Inform your parcel service that the package contains dangerous

goods. Always check state and federal regulations before attempting to ship your battery.

- ▸ **Always use an approved and compatible bicycle rack when transporting your eBike. The Bosch drive system adds weight to the bicycle.** Refer to your bicycle rack manual to be sure your eBike is compatible. Overloading a bike rack can result in death or serious injury.
- ▸ **Use proper lifting techniques as electric bikes are generally heavier than bicycles.**

If you have any questions about transporting the eBike batteries, contact an authorized bicycle dealer.

Maintenance/cleaning

- ▸ **Always switch the battery pack off, when inserting or removing it from the holder.** Never attempt to insert or remove the battery pack while riding the bike.
- ▸ **Do not open or deform the battery housing and/or perform any modifications or service to the battery. There are no user-serviceable components in the battery pack.** Opening a Lithium- Ion battery may result in a hazardous condition.
- ▸ **Do not submerge your eBike components in water, or wash with pressurized hose.** Your Bosch battery pack is designed to be water tight to rain water or non-pressure hose washing.
- ▸ **Note down the manufacturer and the number of the key.** In case of loss of the keys, please refer to an authorised Bosch eBike dealer. Please provide the name of the manufacturer and the number of the key.
- ▸ **Do not apply any cleaning agents, paint or chemicals any components of the Bosch drive system as they may cause premature failure of the component.**

Cleaning

- ▸ **Do not submerge your eBike components in water, or wash with pressurized hose.** Your Bosch battery pack is designed to be water tight to rain water or non-pressure hose washing.

Keep all components of your eBike clean, especially the battery pack contacts and corresponding holder contacts. All components including the drive unit may not be immersed in water or cleaned with a high-pressure cleaner. Clean them carefully with a soft, damp cloth (using only mild soap and water).

Keep the eBike battery clean and avoid contact with skincare products, sun cream and insect repellent. Clean it carefully with a soft, damp cloth.

Clean and lightly grease the connector pins occasionally. Use medical or technical Vaseline for this purpose.

Please contact an authorized bicycle dealer if the eBike battery is no longer working.

After-sales service and advice on using products

If you have any questions about the eBike batteries, contact an authorized bicycle dealer.

- ▸ **Note down the key manufacturer and number on the key (1).** Contact an authorized bicycle dealer if you lose the key. Give them the name of the key manufacturer and the number on the key.

For contact details of authorized bike dealerships, please visit www.bosch-ebike.com.



More information about the eBike components and their functions can be found in the Bosch eBike Help Center.

Storing

The service life of the eBike battery can be extended if it is looked after well and especially if it is stored at the correct temperature.

As it ages, however, the capacity of the eBike battery will diminish, even with good care.

A significantly reduced operating period after charging indicates that the eBike battery pack is worn out and must be replaced. You can replace it yourself by purchasing a genuine Bosch PowerPack from an authorized Bosch eBike dealer.

Recharging the eBike Battery Before and During Storage

When you are not going to use the eBike battery for an extended period (> 3 months), store it at a state of charge of around 30 % to 60 % (when 2 to 3 of the LEDs on the battery charge indicator **(6)** are lit).

Check the state of charge after 6 months. If the state of charge is below 30 %, recharge the eBike battery to between approximately 30 % and 60 %.

Check the state of charge of the permanently installed eBike battery on the operating unit or on the on-board computer.

Note: If the eBike battery is stored with no charge for an extended period of time, it may become damaged despite the low self-discharge, and the battery capacity could be significantly reduced.

Storage conditions

If possible, store the eBike battery in a dry, well-ventilated place. Protect it against moisture and water. When the weather conditions are bad, it is advisable to remove the eBike battery from the eBike and store it in a closed room, for example, until you use it next.

If the battery is integrated in the frame, the whole eBike should be stored indoors.

Do **not** store the eBike battery in the following locations:

– In areas without smoke alarms
– Near combustible or easily flammable objects
– Near space heaters and other heat sources
– In locked vehicles (especially in the summer)
– In direct sunlight

To ensure an optimum service life, store the eBike batteries at room temperature.

Never store them at temperatures below **14 °F** or above **140 °F**.

Make sure that the maximum storage temperature is not exceeded.

It is recommended not to leave the eBike battery on the eBike during storage (does not apply to permanently installed eBike batteries).

Troubleshooting

Note: For built-in eBike batteries, you can see the errors present on the **eBike Flow** app. Please adhere to the specifications stored on the **eBike Flow** app.

Cause	Corrective measures
 eBike battery defective	**Two LEDs flash on the eBike battery.** Contact an authorized bike dealership.
 eBike battery too warm or too cold	**Three LEDs flash on the eBike battery.** Disconnect the eBike battery from the charger until the charging temperature range has been reached. Do not reconnect the eBike battery to the charger until it has reached the correct charging temperature.
 The charger is not charging.	**No LEDs flashing (one or more LEDs will remain permanently lit depending on the state of charge of the eBike battery).** Contact an authorized bike dealership.
Charging not possible (no indicator on eBike battery)	
Connector not attached properly	Check all connections.
eBike battery contacts dirty	Carefully clean the eBike battery contacts.
Socket outlet, cable or charger defective	Check the mains voltage, have the charger checked over by a bike dealership.
eBike battery defective	Contact an authorized bike dealership.

Battery Recycling Program

eBike batteries, accessories and packaging should be disposed of in an environmentally correct manner.

Do not dispose of eBikes and their components with household waste.

Do not dispose of an eBike battery or any other Lithium- Ion battery in your regular household trash or a public trash receptacle. Batteries that enter the regular waste stream can be damaged, leading to a fire resulting in serious injury, death, property damage and environmental contamination.

Tape or mask off the contact surfaces of the battery pack's terminals with adhesive tape before disposing of battery packs.

Do not touch severely damaged eBike batteries with your bare hands – electrolyte may escape and cause skin irritation. Store the defective battery in a safe location outdoors. Cover the terminals if necessary and inform your dealer. They will help you to dispose of it properly.

You may recycle your Bosch battery pack by calling 1.800.822.8837.

Robert Bosch GmbH
72757 Reutlingen
Germany

www.bosch-ebike.com

0 275 U07 3PX (2024.03) T / 95

Owner’s Manual
PowerMore 250

BBP3625



en Original operating instructions

This manual contains important safety, performance and service information. Read and understand it along with the information provided to you by your bicycle manufacturer before using the product, and keep it for reference.

Table of Contents

Introduction 2
About Warnings 2
General Warnings 2
Using your Manual 3
On-product warning labels 4
Handling the Lithium-Ion Battery Pack 5
Safety warnings for Bosch eBike batteries 5
Product description and specifications 8
Fitting 10
Operation 13
Transport 14
Maintenance/cleaning 15
Troubleshooting 16
Battery Recycling Program 17

Introduction

Some content is published under license from the **PeopleForBikes Coalition, LTD**.

About Warnings

This manual contains many **DANGER**, **WARNING** and **CAUTION** indicators concerning the consequences of failure to use, assemble, maintain, store, inspect and dispose of a Bosch-equipped eBike in a safe manner.

– The combination of the safety alert symbol and the word **DANGER** indicates a hazardous situation that, if not avoided, will result in death or serious injury.
– The combination of the safety alert symbol and the word **WARNING** indicates a hazardous situation that, if not avoided, could result in death or serious injury.
– The combination of the safety alert symbol and the word **CAUTION** indicates a hazardous situation that, if not avoided, could result in minor or moderate injury.

General Warnings



Read all safety warnings and all instructions. Failure to follow the warnings and instructions may result in death, property damage or serious injury.

Save all safety warnings and instructions for future reference.

The term **eBike battery** used in these operating instructions refers to all original Bosch eBike batteries from the system generation **the smart system**.

▶ **Read ALL accompanying manuals before riding the bike for the first time.** Your Bosch Drive System comes with additional manuals and documents provided by the manufacturer of the bicycle and other components. Failure to read and understand safety information can result in death or serious injury.

⚠ WARNING

▶ **This manual contains important safety, performance and service information.** Read it before you take the first ride on your new bicycle, and keep it for reference. The manual can also be found online at www.bosch-ebike.com.

▶ **This manual is intended to be read together with the separate user manual provided with your bicycle.** Be sure to read all provided documents including labels on the product before your first ride.

▶ **Take responsibility for your own SAFETY.** If you have any questions or do not understand something, consult with your dealer or the bicycle or component manufacturer.

▶ **Some eBike accessories may present a choking hazard to small children.** Keep these accessories away from children.

⚠ CAUTION

▶ **The Bosch Drive System adds weight to your bicycle which you may not be used to lift.** Avoid injury, use proper lifting techniques.

Using your Manual

In addition to the functions outlined here, changes to software relating to troubleshooting and functional modifications may be introduced at any time.

Graphics

The bicycle shown in this manual may differ slightly from your bicycle, but will be similar enough to help you understand our instructions.

RIGHT-HAND and LEFT-HAND sides are determined by facing in the direction the bicycle will travel when going forward. When you see a broken line (------), the item referred to is hidden from view.

On-product warning labels

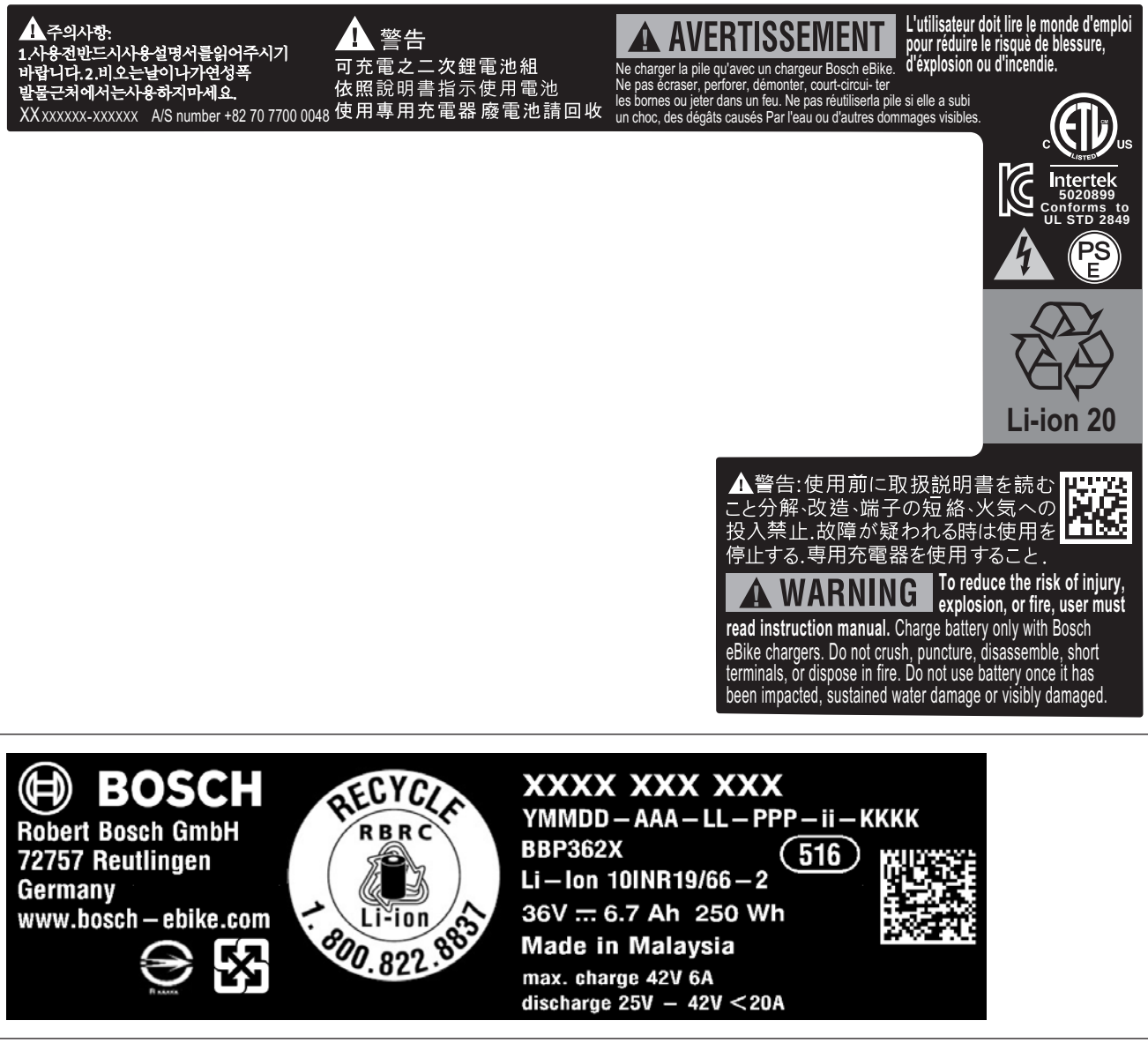

▶ **Warning labels have been placed on the Bosch eBike System for your protection. Read and follow the instructions of the labels on the product carefully. If a label becomes illegible or comes off, contact your Bosch bicycle dealer to obtain a replacement.** Replacement safety labels are provided by Bosch at no charge.

Handling the Lithium-Ion Battery Pack

Safety warnings for Bosch eBike batteries



Read and understand all safety warnings and instructions. Failure to follow the below warnings could result in death or serious injury.

Save all safety warnings and instructions for future reference.

The term **eBike battery** used in these operating instructions refers to all original Bosch eBike batteries from the system generation **the smart system**.

The terms **drive** and **drive unit** used in these operating instructions refer to all original Bosch drive units from the system generation **the smart system**.

The term **charger** is used in these instructions to mean all original Bosch chargers from the system generation **the smart system**.

- ▶ **Read and observe the safety warnings and instructions in all operating instructions of the eBike components and your eBike.**
- ▶ **It is recommended that you periodically review this information to ensure you are following all recommendations for safe use of this product.** Improper use, storage or charging of the battery can cause thermal runaway leading to a sudden and severe fire resulting in property damage, serious injury or death.

⚠ DANGER

- ▶ **Do not puncture or crush the battery pack. Do not impact or drop the battery pack or modify it in any way.** Do not use the battery pack if it shows visible damage. Danger of fire or explosion which can cause death or serious injury.



Protect the battery pack against heat (e.g., temperature > 140 °F), fire and immersing into water. Danger of explosion.

⚠ WARNING

- ▶ **Use only original Bosch battery packs approved for your eBike by the manufacturer and purchased from a credible source.** Use of non-approved or counterfeit battery packs can lead to death or serious injury.
- ▶ **Remove the eBike battery from the eBike before beginning work (e.g. inspection, repair, assembly, maintenance, work on the chain, etc.) on the eBike, transporting it by car or airplane, or storing it.** Unintentional activation of the eBike poses a risk of injury.
- ▶ **You must not remove fixed mount eBike batteries yourself. Have an authorized bicycle retailer install and remove fixed mount eBike batteries for you.**
- ▶ **Do not open the eBike battery.** There is a risk of short-circuiting.
- ▶ **When the eBike battery is not in use, keep it away from paper clips, coins, keys, nails, screws or other small metal objects that could make a connection from one terminal to another.** A short circuit between the terminals may cause burns or a fire.
- ▶ **Avoid mechanical loads and exposure to high temperatures.** These can damage the battery cells and cause the flammable contents to leak out.
- ▶ **Do not place the charger or the eBike battery near flammable materials. Ensure the eBike battery is completely dry and kept on a clean, dry, flat and non-flammable surface.** There is a risk of fire due to the heat generated during charging.
- ▶ **The eBike battery must not be left unattended while charging, especially overnight.** Once the battery is fully charged, disconnect the charger from the battery. Do not leave the battery con-

nected to the charger for an extended period of time after it has reached full charge.

- ▶ **Do not charge or use your eBike in any area with a potentially explosive atmosphere, such as at a fueling area, or in areas where the air contains chemicals or particles (such as grain, dust, or metal powders).** Obey all signs and instructions.
- ▶ **If used incorrectly, the eBike battery may leak fluid; avoid contact. If contact occurs, rinse off with water. If the liquid comes into contact with your eyes, seek additional medical attention.** Fluid ejected from the battery may cause skin irritation or burns.
- ▶ **eBike batteries must not be subjected to mechanical shock, excessive vibration or excessive weight from objects placed on the battery.** There is a risk of the eBike battery being damaged.
- ▶ **The eBike battery may give off fumes if it becomes damaged or is used incorrectly. Ensure the area is well ventilated and seek medical attention should you experience any adverse effects.** The fumes may irritate the respiratory system.
- ▶ **Only charge the eBike battery using an original Bosch charger from the system generation the smart system.** When using chargers made by other manufacturers, the risk of fire cannot be excluded.
- ▶ **Use the eBike battery only in conjunction with eBikes from the system generation the smart system.** This is the only way in which you can protect the eBike battery against dangerous overload.
- ▶ **Use only original Bosch eBike batteries from the system generation the smart system that the manufacturer has approved for your eBike.** Using other eBike batteries can lead to injuries and pose a fire hazard. Bosch accepts no liability or warranty claims if other eBike batteries are used.
- ▶ **When not in use, disconnect the cable from the PowerMore battery and from the charging socket on the eBike battery and store the cable away securely.** Failure to do so poses a serious risk of injury.
- ▶ **Keep the battery and charger away from children and animals. Unless supervised or instructed on proper/responsible use, children or people who lack the necessary experience or understanding to operate the battery and charger safely should not be left unattended with the battery and charger.** There is a significant risk of personal injury and/or damage.

The safety of both our customers and our products is important to us. Our eBike batteries are lithium-ion batteries which have been developed and manufactured in accordance with the latest technology. We comply with or exceed the requirements of all relevant safety standards. When damaged, improperly charged or misused, Lithium-Ion batteries are susceptible to an uncontrollable energy release resulting in a sudden and severe fire. A Lithium-Ion battery fire generally cannot be put out until the energy contained therein is exhausted. Therefore, proper use, charging, discharging, care, maintenance, storage and transportation are all critical to the long-term use of the battery and the safety of the user and others.

The manual can also be found online at www.bosch-ebike.com.

- ▶ **The battery charge port terminals and/or the charger plug can get contaminated. Repeatedly connecting contaminated terminals can result in worn and damaged terminals.** Clean thoroughly before connecting the charger.
- ▶ **Do not touch the terminals of the battery or charger during an electrical storm in case of a lightning strike.**
- ▶ **Always follow charger and battery operating, charging and storage temperature.**
- ▶ **Do not use a power inverter to charge the battery from a 12-volt automobile auxiliary power outlet in a vehicle.** Incorrect or excessive voltage can result in overheating, which can damage the

battery and reduce the battery's lifespan or cause a sudden and severe fire.

- ▶ **If the battery becomes too hot, starts to emit smoke, flame or a strong odor, shows any signs of deformation/bulging/leaks or otherwise presents unusual characteristics, discontinue use of the battery.** If a battery exhibits any of these symptoms and is failing catastrophically, evacuate the area immediately and call fire authorities. Only if possible to do so safely and quickly should you attempt to move the battery outdoors and away from people and flammable materials.

Privacy notice

When connecting the eBike to the **Bosch Diagnostic-Tool 3** or when exchanging eBike components, technical information about your eBike (e.g. manufacturer, model, bike ID, configuration data) as well as regarding the use of the eBike (e.g. total travel time, energy consumption, temperature) is transmitted to Bosch eBike Systems (Robert Bosch GmbH) for processing your request, in service cases and for the purposes of product improvement. More information on data processing can be found at www.bosch-ebike.com/privacy-full.

Product description and specifications

Product Features

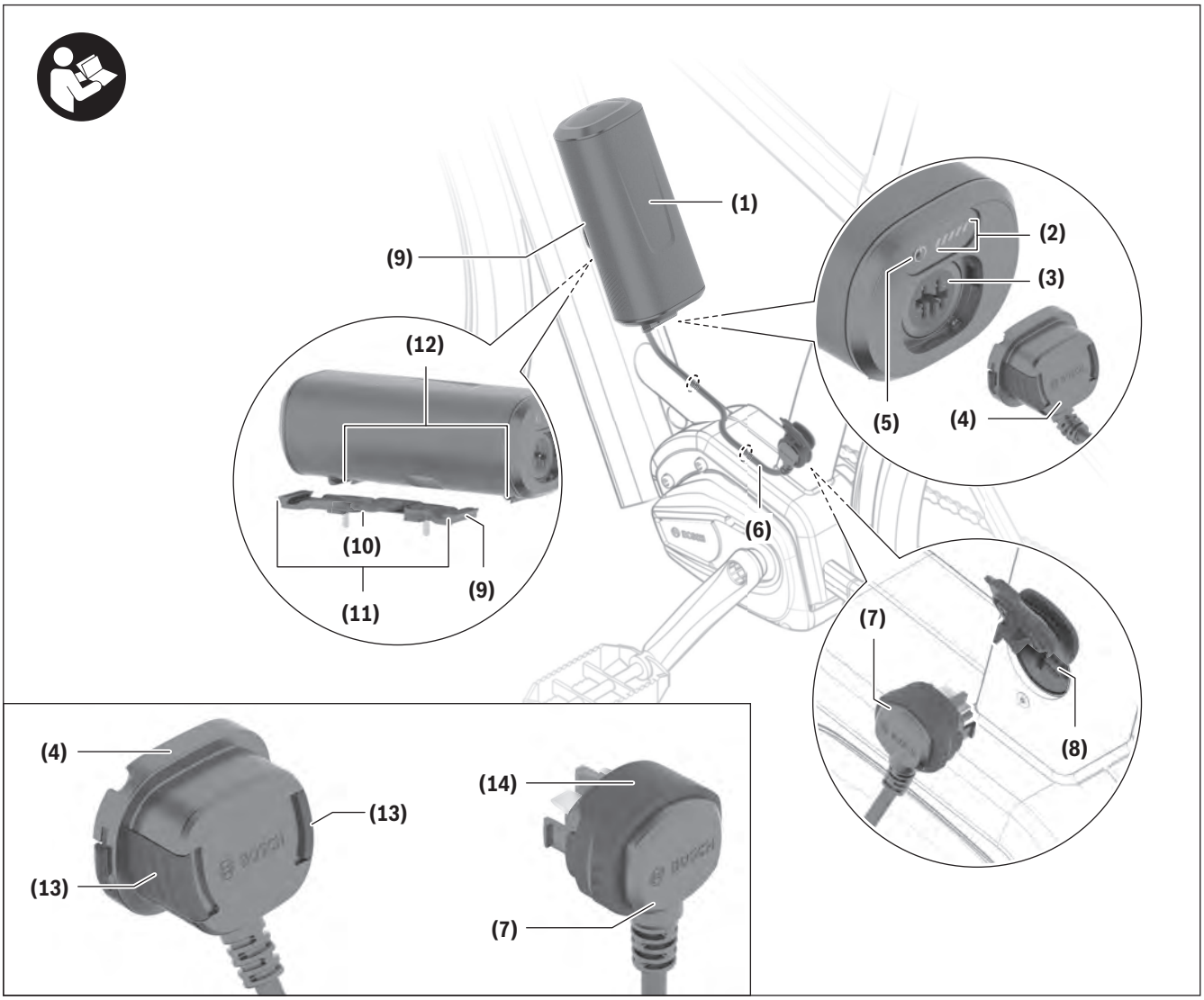

All representations of bike components are schematic and can deviate from your eBike.

(1) PowerMore battery
(2) Operation/battery charge indicator
(3) PowerMore battery connection socket
(4) PowerMore battery cable connector
(5) On/off button
(6) PowerMore battery cable
(7) eBike charging socket cable connector
(8) eBike charging socket
(9) PowerMore battery holder
(10) Release button for PowerMore battery holder
(11) Guide rail for PowerMore battery holder
(12) Guide grooves for PowerMore battery

(13) Release buttons for PowerMore battery cable connector

(14) Release mechanism for eBike charging socket cable connector

Intended Use

The Bosch eBike batteries from the system generation **the smart system** are intended exclusively for the power supply of your drive unit from the system generation **the smart system** and must not be used for any other purpose.

Only the manufacturer-approved cable may be used to connect the eBike battery.

Technical Data

Li-ion battery		PowerMore 250
Product code		BBP3625
Rated voltage	V	36
Nominal capacity	Ah	6.7
Energy	Wh	250[A)]
Operating temperature	°F	23 to 104
Storage temperature	°F	50 to 104
Permitted charging temperature range	°F	32 to 104
Weight, approx.	lbs	3.3
Protection rating		IP55

A) Advertised battery energy capacity is an approximation. Due to manufacturing tolerances measured capacity may not always match the advertised capacity.

Fitting

- ▸ **Ensure the eBike battery is placed on clean surfaces only.** Avoid getting dirt, e.g. sand or soil, in the charging socket and contacts in particular.
- ▸ **The PowerMore battery is only permitted for installation on eBikes that the manufacturer has designed specifically for such batteries.** Check whether your eBike is compatible for use with the PowerMore battery. Follow the operating instructions of the eBike manufacturer. If you have any questions or need further information, contact an authorized bike dealership.
- ▸ **The eBike battery may only be used in the battery holder on the eBike.**

Note: An eBike may also be fitted with two eBike batteries. Follow the operating instructions of the eBike manufacturer. If you have any questions or need further information, contact an authorized bike dealership.

Note: During installation, pay particular attention to the markings on the battery holder and on the PowerMore battery.

Note: The PowerMore battery is only permitted for installation on the guide rails provided. The guide rails are only permitted for use with the PowerMore battery and the compatible bottle holder. Observe the specifications of the eBike manufacturer.

Note: When laying the cable, follow the specifications of the eBike manufacturer. If you have any questions or need further information, contact an authorized bike dealership.

Testing the eBike Battery Before Use

Test the eBike battery before charging it for the first time or using it in your eBike.

To do this, press the on/off button **(5)** to switch the eBike battery on. If none of the LEDs on the battery charge indicator **(2)** lights up, the eBike battery may be damaged.

If at least one (but not all) of the LEDs on the battery charge indicator **(2)** lights up, the eBike battery will need to be fully charged before using it for the first time.

- ▸ **Do not charge or use eBike batteries if they are damaged.** Contact an authorized bicycle dealer.

Charging the eBike Battery

- ▸ **A Bosch eBike battery from the system generation the smart system must only be charged using an original Bosch charger from the system generation the smart system.**

Note: The eBike battery is supplied partially charged. To ensure full capacity of the eBike battery, fully charge the battery in the charger before using it for the first time.

To charge the eBike battery, read and follow the instructions in the operating manual for the charger.

The eBike battery can be charged at any state of charge. Interrupting the charging process does not damage the eBike battery.

The eBike battery has a temperature monitoring function that only allows it to be charged within a temperature range of **32 °F** to **104 °F**.



If the temperature of the eBike battery is outside this charging range, three of the LEDs on the battery charge indicator **(2)** will flash. Disconnect the eBike battery from the charger and let it reach the correct temperature range.

Do not reconnect the eBike battery to the charger until it has reached the correct charging temperature.

Battery charge indicator outside of the eBike

Note: The PowerMore battery charge indicator **(2)** switches back off as soon as the eBike battery is switched on.

The five LEDs on the battery charge indicator **(2)** indicate the battery's state of charge when the eBike battery is switched on.

Each LED represents approximately 20 % of the charging capacity. When the eBike battery is fully charged, all five LEDs will be lit.

The eBike battery's state of charge when switched on is also shown on the display of the on-board computer. Read and follow the instructions in the operating manuals for the drive unit and on-board computer.

If the eBike battery's capacity is less than 10 %, the last remaining LED will flash.

Once charging is complete, disconnect the eBike battery from the charger and the charger from the mains.

Laying the Cable on the PowerMore Battery Holder

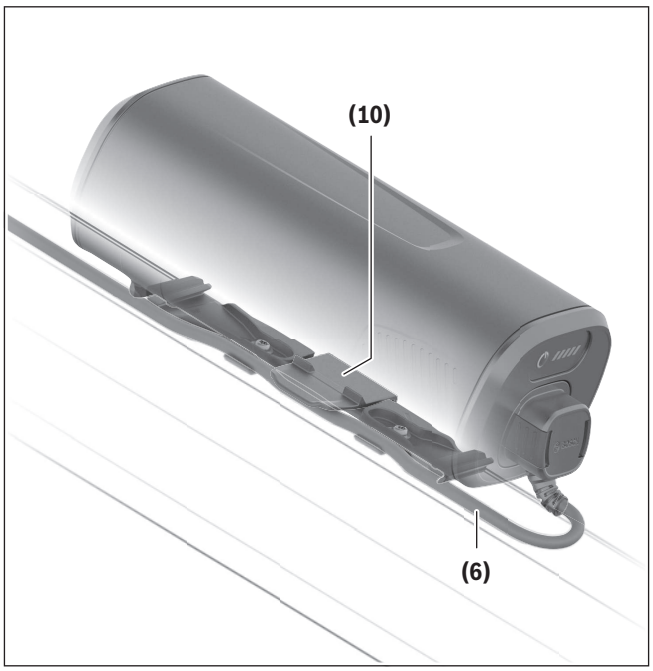

Note: When laying the cable **(6)**, make sure that the cable **(6)** is fed under the release button **(10)**. This prevents the release button **(10)** from being pressed accidentally and causing the PowerMore battery to be released.

Inserting and Removing the PowerMore Battery

- ▶ **When inserting the battery into the holder or removing it from the holder, always switch off the eBike battery and the eBike beforehand.**
- ▶ **Once you have inserted the eBike battery, check that it is correctly positioned and secure in all directions.**
- ▶ **Only leave the PowerMore battery with the cable connected to the eBike.**
- ▶ **Once the PowerMore battery is installed, the connection socket of the battery must not face upwards.**
- ▶ **Do not remove the battery from the eBike during the charging process.** If the battery has to be removed, first end the charging process before removing the battery from the eBike, then once the battery is in a proper state for charging, restart the charging process.

Inserting the PowerMore Battery

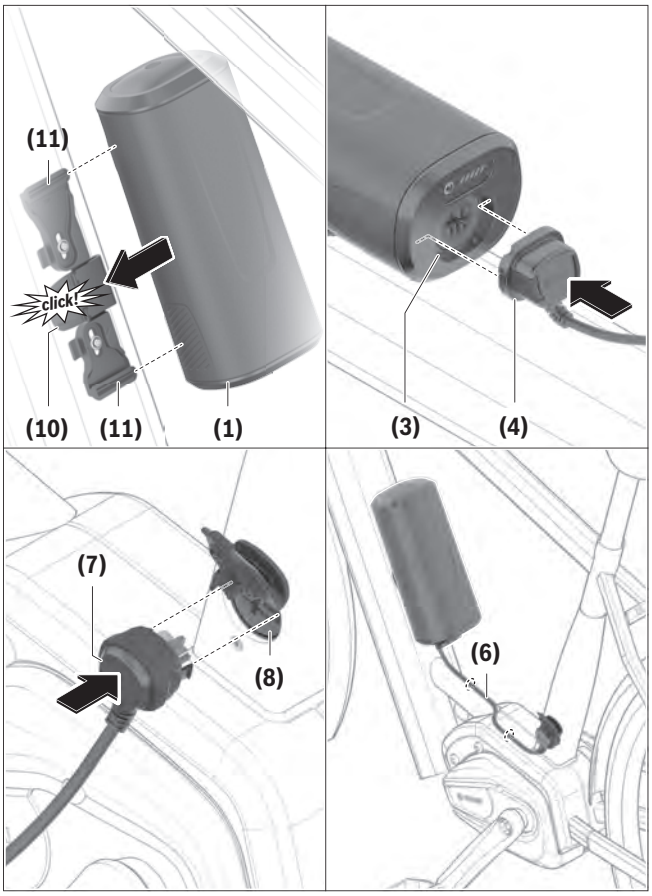

To **insert** the battery **(1)**, place its guide grooves **(12)** onto the guide rails **(11)**. Ensure that the battery is aligned correctly and that the battery is positioned in both guide rails. Slide the battery **(1)** into the holder **(9)** until it audibly clicks into place.

Insert the cable connector **(4)** into the connection socket **(3)**. Ensure that the cable connector **(4)** is aligned correctly.

Insert the cable connector **(7)** into the eBike charging socket **(8)**. Ensure that the cable connector **(7)** is aligned correctly.

Secure the cable **(6)** in place as directed by the eBike manufacturer (e.g. with cable clips).

Removing the PowerMore Battery

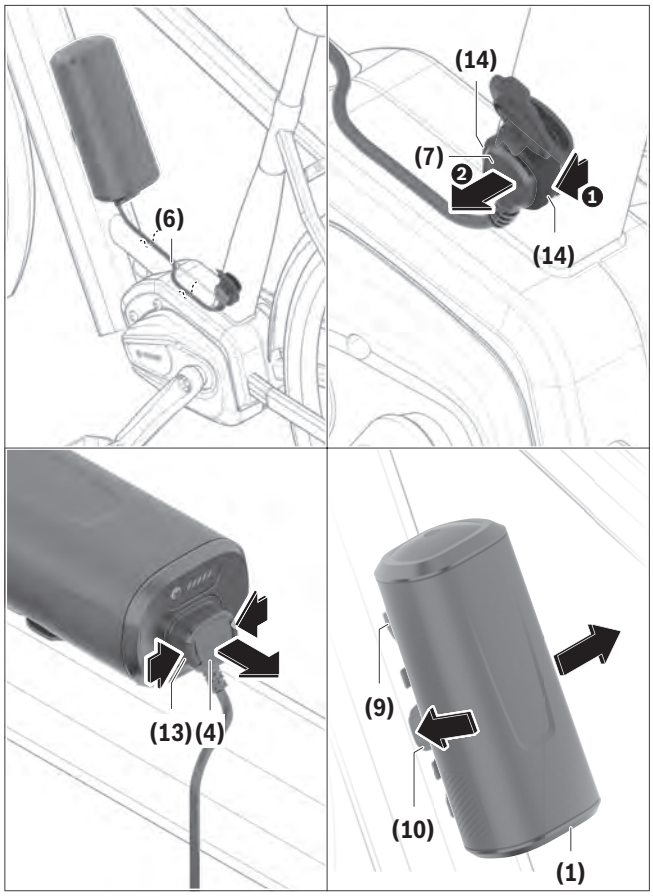

Firstly, disconnect the cable **(6)** by opening the cable lock as directed by the eBike manufacturer.

Pull the release mechanism **(14)** towards you ❶ and remove the cable connector **(7)** from the eBike charging socket ❷.

Press the release buttons **(13)** and remove the cable connector **(4)** from the connection socket.

To **remove** the battery **(1)**, press the release button **(10)** and pull the battery **(1)** sideways out of the holder **(9)**.

Note: As a result of **varying** designs, the PowerMore battery may need to be inserted and removed using a different method. Read the eBike manufacturer's operating instructions.

Operation

Start-up

Note: The PowerMore battery can be used as the sole battery on the eBike. Please note that, due to the reduced capacity, both the range and performance of the drive unit will be reduced.

Switching on/off

Switching on the eBike battery is one way to switch on the eBike. To do this, read and follow the instructions in the operating manuals for the drive unit and operating unit.

Once the PowerMore battery is connected to the eBike via the PowerMore cable, the eBike can be switched on/off via the on/off button **(5)**. Do not use sharp or pointed objects to press the button.

To **switch off** the eBike battery, press the on/off button **(5)** again. This will also switch the eBike off.

If no drive assistance is requested for about **10** minutes (e.g. because the eBike is not moving) and no button is pressed on the on-board computer or the operating unit of the eBike, the eBike will switch off automatically.

The eBike battery is protected against deep discharge, overloading, overheating and short-circuiting by the Battery Management System (BMS). In the event of danger, a protective circuit switches the eBike battery off automatically.



If a fault is detected in the eBike battery, two of the LEDs on the battery charge indicator **(2)** will flash. Contact an authorized bicycle dealer if this happens.

Recommendations for Optimal Handling of the eBike Battery

The service life of the eBike battery can be extended if it is looked after well and especially if it is stored at the correct temperature.

As it ages, however, the capacity of the eBike battery will diminish, even with good care.

A significantly reduced operating time after charging indicates that the eBike battery has deteriorated. The eBike battery should be replaced.

Recharging the eBike Battery Before and During Storage

When you are not going to use the eBike battery for an extended period (longer than three months), store it at a state of charge of around 30 % to 60 % (when two to three of the LEDs on the battery charge indicator **(2)** are lit).

Check the state of charge after six months. If only one of the LEDs on the battery charge indicator **(2)** is lit, charge the eBike battery back up to around 30 % to 60 %.

Note: If the eBike battery is stored with no charge for an extended period of time, it may become damaged despite the low self-discharge and the battery capacity could be significantly reduced.

Leaving the eBike battery permanently connected to the charger is not recommended.

Storage conditions

If possible, store the eBike battery in a dry, well-ventilated place. Protect it against moisture and water. When the weather conditions are bad, it is advisable to remove the eBike battery from the eBike and store it in a closed room, for example, until you use it next.

If the battery is integrated in the frame, the whole eBike should be stored indoors.

Do **not** store the eBike battery in the following locations:

- In areas without smoke alarms
- Near combustible or easily flammable objects
- Near space heaters and other heat sources
- In locked vehicles (especially in the summer)
- In direct sunlight

To ensure an optimum service life, store the eBike batteries at room temperature.

Never store them at temperatures below **14 °F** or above **140 °F**.

Make sure that the maximum storage temperature is not exceeded.

- ▸ **Keep the battery and the charge port connectors (terminals or pins) dry, clean and free of debris. Make sure the battery and charger have no items covering or placed on top of them.**

Behavior in the event of a fault

The eBike battery must not be opened, not even for repairs. There is a risk of the eBike battery catching fire, e.g. as a result of a short circuit. This risk continues to apply for any Bosch eBike battery that has **ever** been opened, even at a later point in time.

In the event of a fault, do not have your eBike battery repaired; instead, have your bicycle retailer replace it with an original Bosch eBike battery from the system generation **the smart system**.

Transport

- ▸ **If you transport your eBike attached to the outside of your car, e.g. on a bike rack, remove the on-board computer and the eBike battery (except fixed mount battery) to avoid damaging them.**

The eBike batteries are subject to legislation on the transport of dangerous goods.

When batteries are transported by commercial users or third parties (e.g. air transport or forwarding agency), special requirements on packaging and labeling (e.g. ADR regulations) must be met. When preparing items for shipping, a dangerous goods expert can be consulted as required.

Do not ship or transport a damaged battery or attempt to circumvent laws regarding shipping of Lithium- Ion batteries. Failure to follow this warning may lead to a fire during the transportation process, resulting in serious personal injury or death to transportation workers or the public, and damage to vehicles or transportation facilities for which you may be held civilly and criminally responsible. Use only the original Bosch eBike battery packaging when transporting the eBike battery. Apply tape over exposed contacts and pack the eBike battery such that it cannot move around inside the packaging. Inform your parcel service that the package contains dangerous goods. Always check state and federal regulations before attempting to ship your battery.

- ▸ **Always use an approved and compatible bicycle rack when transporting your eBike. The Bosch drive system adds weight to the bicycle.** Refer to your bicycle rack manual to be sure your eBike is compatible. Overloading a bike rack can result in death or serious injury.
- ▸ **Use proper lifting techniques as electric bikes are generally heavier than bicycles.**

If you have any questions about transporting the eBike batteries, contact an authorized bicycle dealer.

Maintenance/cleaning

- **Do not open or deform the battery housing and/or perform any modifications or service to the battery. There are no user-serviceable components in the battery pack.** Opening a Lithium- Ion battery may result in a hazardous condition.
- **Always switch the battery pack off, when inserting or removing it from the holder.** Never attempt to insert or remove the battery pack while riding the bike.
- **Do not submerge your eBike components in water, or wash with pressurized hose.** Your Bosch battery pack is designed to be water tight to rain water or non-pressure hose washing.
- **Note down the manufacturer and the number of the key.** In case of loss of the keys, please refer to an authorised Bosch eBike dealer. Please provide the name of the manufacturer and the number of the key.
- **Do not apply any cleaning agents, paint or chemicals any components of the Bosch drive system as they may cause premature failure of the component.**

Cleaning

- **Do not submerge your eBike components in water, or wash with pressurized hose.** Your Bosch battery pack is designed to be water tight to rain water or non-pressure hose washing.

Keep all components of your eBike clean, especially the battery pack contacts and corresponding holder contacts. All components including the drive unit may not be immersed in water or cleaned with a high-pressure cleaner. Clean them carefully with a soft, damp cloth (using only mild soap and water).

Keep the eBike battery clean and avoid contact with skincare products, sun cream and insect repellent. Clean it carefully with a soft, damp cloth.

Clean and lightly grease the connector pins occasionally. Use medical or technical Vaseline for this purpose.

Please contact an authorized bicycle dealer if the eBike battery is no longer working.

After-sales service and advice on using products

If you have any questions about the eBike batteries, contact an authorized bicycle dealer.

For contact details of authorized bike dealerships, please visit www.bosch-ebike.com.

More information about the eBike components and their functions can be found in the Bosch eBike Help Center.

Troubleshooting

Note: For built-in eBike batteries, you can see the errors present on the **eBike Flow** app. Please adhere to the specifications stored on the **eBike Flow** app.

Cause	Corrective measures
 eBike battery defective	**Two LEDs flash on the eBike battery.** Contact an authorized bike dealership.
 eBike battery too warm or too cold	**Three LEDs flash on the eBike battery.** Disconnect the eBike battery from the charger until the charging temperature range has been reached. Do not reconnect the eBike battery to the charger until it has reached the correct charging temperature.
 The charger is not charging.	**No LEDs flashing (one or more LEDs will remain permanently lit depending on the state of charge of the eBike battery).** Contact an authorized bike dealership.
Charging not possible (no indicator on eBike battery)	
Connector not attached properly	Check all connections.
eBike battery contacts dirty	Carefully clean the eBike battery contacts.
Socket outlet, cable or charger defective	Check the mains voltage, have the charger checked over by a bike dealership.
eBike battery defective	Contact an authorized bike dealership.

Battery Recycling Program



eBike batteries, accessories and packaging should be disposed of in an environmentally correct manner.

Do not dispose of eBikes and their components with household waste.

Do not dispose of an eBike battery or any other Lithium- Ion battery in your regular household trash or a public trash receptacle. Batteries that enter the regular waste stream can be damaged, leading to a fire resulting in serious injury, death, property damage and environmental contamination.

Tape or mask off the contact surfaces of the battery pack's terminals with adhesive tape before disposing of battery packs.

Do not touch severely damaged eBike batteries with your bare hands – electrolyte may escape and cause skin irritation. Store the defective battery in a safe location outdoors. Cover the terminals if necessary and inform your dealer. They will help you to dispose of it properly.



You may recycle your Bosch battery pack by calling 1.800.822.8837.

Robert Bosch GmbH
72757 Reutlingen
Germany

www.bosch-ebike.com

0 275 U07 3RE (2024.03) T / 55

Owner’s Manual
Charger

BPC3210 | BPC3410



en Original operating instructions

This manual contains important safety, performance and service information. Read and understand it along with the information provided to you by your bicycle manufacturer before using the product, and keep it for reference.

Table of Contents

Introduction 2
About Warnings 2
General Warnings 2
Using your Manual 3
On-Product Warning Labels Charger 4
Operating the Charger 5
Safety Instructions 5
Product Description and Specifications 8
Operation 10
Maintenance/cleaning 13
Troubleshooting 14
Battery Recycling Program 15

Introduction

Some content is published under license from the **PeopleForBikes Coalition, LTD**.

About Warnings

This manual contains many **DANGER**, **WARNING** and **CAUTION** indicators concerning the consequences of failure to use, assemble, maintain, store, inspect and dispose of a Bosch-equipped eBike in a safe manner.

– The combination of the safety alert symbol and the word **DANGER** indicates a hazardous situation that, if not avoided, will result in death or serious injury.
– The combination of the safety alert symbol and the word **WARNING** indicates a hazardous situation that, if not avoided, could result in death or serious injury.
– The combination of the safety alert symbol and the word **CAUTION** indicates a hazardous situation that, if not avoided, could result in minor or moderate injury.

General Warnings



Read all safety warnings and all instructions. Failure to follow the warnings and instructions may result in death, property damage or serious injury.

Save all safety warnings and instructions for future reference.

The term **eBike battery** used in these operating instructions refers to all original Bosch eBike batteries from the system generation **the smart system**.

▶ **Read ALL accompanying manuals before riding the bike for the first time.** Your Bosch Drive System comes with additional manuals and documents provided by the manufacturer of the bicycle and other components. Failure to read and understand safety information can result in death or serious injury.

⚠ WARNING

▶ **This manual contains important safety, performance and service information.** Read it before you take the first ride on your new bicycle, and keep it for reference. The manual can also be found online at www.bosch-ebike.com.

▶ **This manual is intended to be read together with the separate user manual provided with your bicycle.** Be sure to read all provided documents including labels on the product before your first ride.

▶ **Take responsibility for your own SAFETY.** If you have any questions or do not understand something, consult with your dealer or the bicycle or component manufacturer.

▶ **Some eBike accessories may present a choking hazard to small children.** Keep these accessories away from children.

⚠ CAUTION

▶ **The Bosch Drive System adds weight to your bicycle which you may not be used to lift.** Avoid injury, use proper lifting techniques.

Using your Manual

In addition to the functions outlined here, changes to software relating to troubleshooting and functional modifications may be introduced at any time.

Graphics

The bicycle shown in this manual may differ slightly from your bicycle, but will be similar enough to help you understand our instructions.

RIGHT-HAND and LEFT-HAND sides are determined by facing in the direction the bicycle will travel when going forward. When you see a broken line (------), the item referred to is hidden from view.

On-Product Warning Labels Charger

A

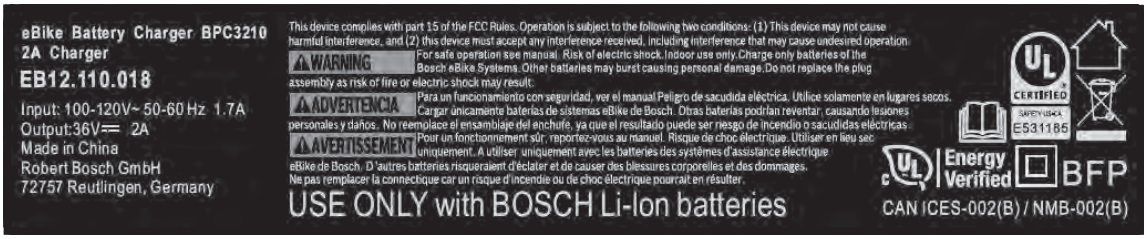

B

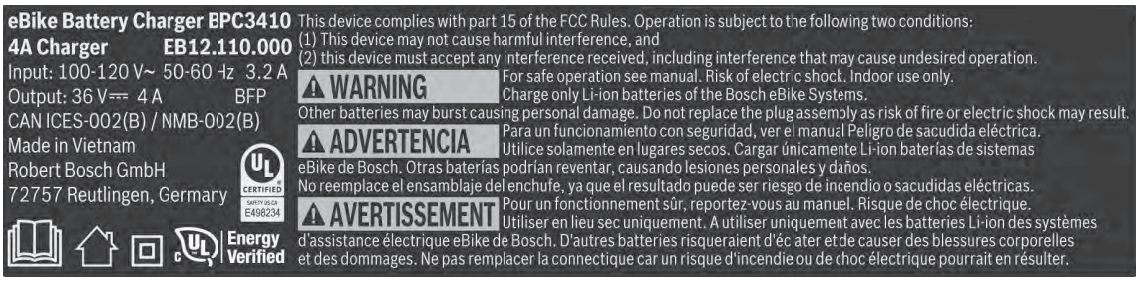

A 2A charger

B 4A charger

A short version of important safety warnings in English, French and Spanish with the following content can be found on the bottom side of the charger (marked with number **(4)** in the representation on the graphics page):

- For safe operation, see manual.
- Risk of electric shock
- Indoor use only
- Charge only batteries for the Bosch eBike Systems. Other batteries may burst causing personal damage.
- Do not replace the plug assembly as risk of fire or electric shock may result.

Operating the Charger

Safety Instructions

IMPORTANT SAFETY INSTRUCTIONS SAVE THESE INSTRUCTIONS –

This manual contains important safety and operating instructions for this battery charger.

- Before using battery charger, read all instructions and cautionary markings on battery charger, battery, and product using battery.

⚠ CAUTION

- **To reduce risk of injury, charge only batteries of the Bosch eBike Systems.** Other types of batteries may burst causing personal injury and damage.



- **Read and understand all safety warnings and instructions.** Failure to follow the below warnings could result in death or serious injury.

Save all safety warnings and instructions for future reference.

The term **charger** is used in these instructions to mean all original Bosch chargers from the system generation **the smart system**.

The term **eBike battery** used in these operating instructions refers to all original Bosch eBike batteries from the system generation **the smart system**.

- **Read and observe the safety warnings and instructions in all operating instructions of the eBike components and your eBike.**
- **It is recommended that you periodically review this information to ensure you are following all recommendations for safe use of this product.**

⚠ DANGER

- **Only charge Bosch eBike lithium-ion battery packs with approved Bosch eBike chargers. The battery pack voltage must match the battery pack charging voltage of the charger.** Otherwise, there is risk of fire and explosion.
- **Carefully cover the charging socket with the flap after charging the eBike.** This ensures that no dirt or water gets in.



Do not expose the charger to rain or wet conditions. If water enters a charger, there is a risk of electric shock.

⚠ WARNING

- **Use only the original Bosch battery charger supplied with your eBike or one approved for your eBike by the manufacturer and purchased from a trusted source.** Bypassing the battery charger or the use of a non-approved or counterfeit battery charger can lead to death or serious injury.
- **Do not charge or use your eBike in any area with a potentially explosive atmosphere, such as at a fueling area, or in areas where the air contains chemicals or particles (such as grain, dust, or metal powders).** Obey all signs and instructions.
- **Keep the battery charger clean.** Contamination can lead to the risk of an electric shock. Clean only with the use of a damp cloth (mild soap/water).
- **Always check the charger, cable and plug before use. Stop using the charger if you discover any damage. Do not open the charger.** Damaged chargers, cables and plugs increase the risk of electric shock.
- **Avoid excessive load on the device socket and the device connector**. This may result in the charger becoming unusable.
- **Do not operate the charger and the eBike battery on an easily ignited surface (e.g. paper, textiles, etc.) or in a flammable environment.** There is a risk of fire due to the charger heating up during operation.
- **The battery and charger housings can get hot while charging, especially when the ambient temperature is high.** Use caution when touching

the battery and charger while charging. Wear protective glove.

- ▶ **The eBike battery must not be left unattended while charging, especially overnight.** Once the battery is fully charged, disconnect the charger from the battery. Do not leave the battery connected to the charger for an extended period of time after it has reached full charge.
- ▶ **Keep the battery charger away from children.** This will ensure that children do not play with the charger.
- ▶ **Keep the battery and charger away from children and animals. Unless supervised or instructed on proper/responsible use, children or people who lack the necessary experience or understanding to operate the battery and charger safely should not be left unattended with the battery and charger.** There is a significant risk of personal injury and/or damage.
- ▶ **Persons who are not capable of safely operating the charger because of their physical, sensory or mental limitations, or because of their lack of experience or knowledge, may only use this charger under supervision or after having been instructed by a responsible person.** Otherwise, there is a risk of operating errors and injuries.
- ▶ **When charging, be aware of the location of the charger cable.** Tripping over the charger cable can result in a fall, leading to personal injury or cause the eBike to fall over.
- ▶ **Do not move the eBike or allow it to fall while it's charging.** Make sure the eBike is stable and cannot move easily.
- ▶ **Do not plug into a power strip or overload an outlet.** Plug directly into an electrical outlet for charging.
- ▶ **Do not use a power converter, for example to convert 220 volts to 110 volts.**
- ▶ **The battery charge port terminals and/or the charger plug can get contaminated. Repeatedly connecting contaminated terminals can result in worn and damaged terminals.** Clean thoroughly before connecting the charger.
- ▶ **Do not touch the terminals of the battery or charger during an electrical storm in case of a lightning strike.**
- ▶ **Handle the charger and power cables with care.** Do not tightly bundle, apply excessive tension (pull force) or carry by the cables.
- ▶ **Always follow charger and battery operating, charging and storage temperature.**
- ▶ **Ensure the charging area is protected from the elements, dry, well-ventilated, and has a smoke detector.**
- ▶ **Ensure the rated voltage capacity from the power source (electrical outlet) matches the charger.**

NOTICE: This device complies with part 15 of the FCC Rules. Operation is subject to the following two conditions:

1. This device must not cause harmful interference, and
2. this device must accept any interference received, including interference that may cause undesired operation.

NOTICE: Changes or modifications made to this equipment not expressly approved by the Robert Bosch GmbH may void the FCC authorization to operate this equipment.

NOTE: This equipment has been tested and found to comply with the limits for a Class B digital device, pursuant to Part 15 of the FCC Rules. These limits are designed to provide reasonable protection against harmful interference in a residential installation. This equipment generates, uses and can radiate radio frequency energy and, if not installed and used in accordance with the instructions, may cause harmful interference to radio communications. However, there is no guarantee that interference will not occur in a particular installation. If this equipment does cause harmful interference to radio or television reception, which can be determined by turning the equipment

off and on, the user is encouraged to try to correct the interference by one or more of the following measures:

- Reorient or relocate the receiving antenna.
- Increase the separation between the equipment and receiver.
- Connect the equipment into an outlet on a circuit different from that to which the receiver is connected.
- Consult the dealer or an experienced radio/TV technician for help.

Responsible party:
Bosch eBike Systems Americas
Robert Bosch LLC
27211 Burbank, Foothill Ranch, CA 92610, USA,
www.bosch-ebike.com/us/

Product Description and Specifications

Product Features

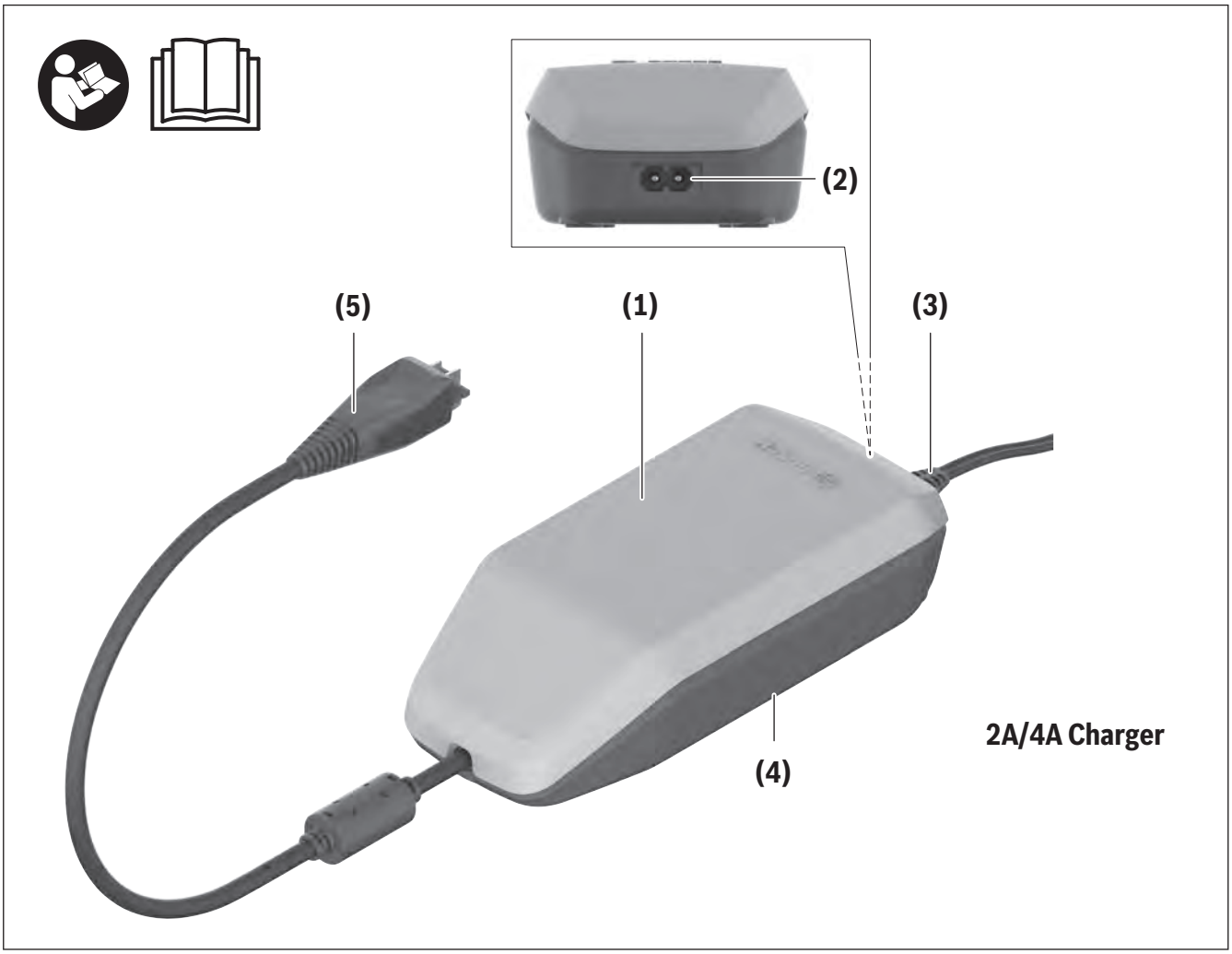

All representations of bike components are schematic and can deviate from your eBike.

(1) Charger
(2) Device socket
(3) Device connector
(4) Charger safety instructions
(5) Charging connector

Intended Use

In addition to the functions outlined here, changes to software relating to troubleshooting and functional modifications may be introduced at any time.

The Bosch eBike chargers are intended exclusively to charge eBike batteries and must not be used for any other purpose.

The Bosch eBike chargers depicted here are compatible with Bosch eBike batteries from the new system generation **the smart system**.

Technical data

Charger		2A charger	4A charger
Product code		BPC3210	BPC3410
Input voltage	V	100–120	100–120
Frequency	Hz	50–60	50–60
Rated voltage of the rechargeable battery	V	36	36
Charging current (max.)	A	2	4
Charging time for PowerPack 400, approx.[A)]	h	6	3.5
Charging time for PowerTube 625, approx.[A)]	h	9.3	5.4
Charging time for PowerTube 800, approx.[A)]	h	12.4	6.9
Operating temperature	°F	32 to 104	32 to 104
Storage temperature	°F	50 to 104	50 to 104
Weight, approx.	lb	1.2	1.5
Protection rating		IP40	IP40

A) You can find the charging times for additional eBike batteries at: www.bosch-ebike.com.

Power cable		
Article number		1 270 020 343
Rated voltage – cables	V	300
Rated voltage – connectors/plug-in connectors	V	125
Rated current – connectors/plug-in connectors	A	10
Material – cables		PVC
Safety standard – cables		UL 62
Safety standard – connectors/plug-in connectors		UL 817
Length, approx.	ft	6

With regard to electromagnetic compatibility (EMC), the charger is classified as a table-top device.

Operation

Start-up

Connecting the charger to the mains

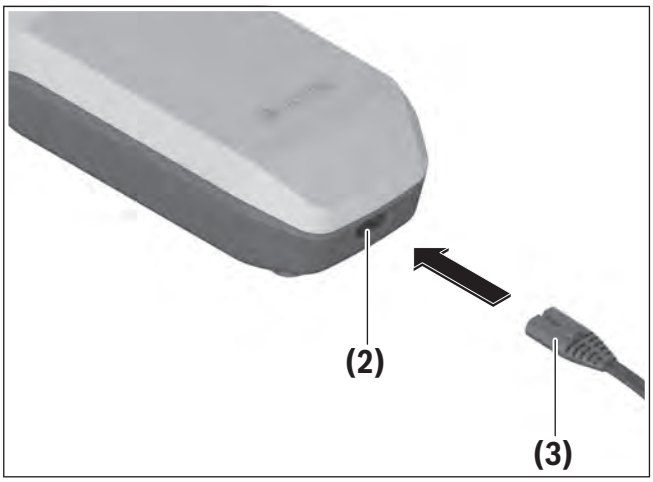

(2) Device socket

(3) Device connector

▶ **Note the household voltage!** The voltage of the power supply must correspond to the specifications given on the battery charger nameplate.

Plug the device connector **(3)** of the power cable into the device socket **(2)** on the charger.

Connect the power cable (country-specific) to the mains.

Use only the supplied input connection: standard AC power cord (**(3)** in the diagram) when connecting to the household electrical supply.

Charging the eBike Battery when Removed

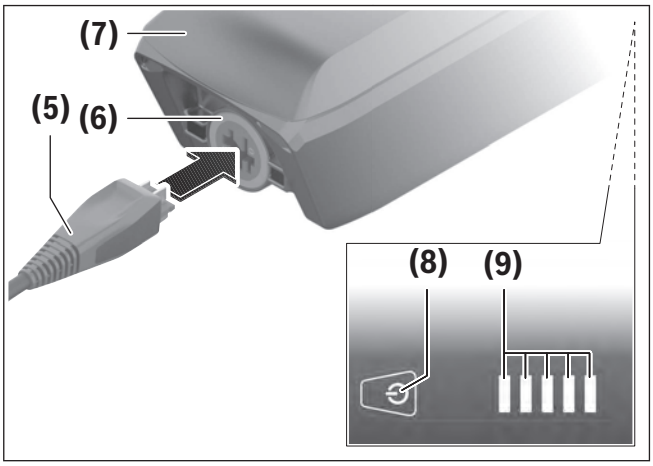

(5) Charging connector
(6) Socket for charging connector
(7) PowerPack
(8) eBike battery on/off button
(9) Operation/battery charge indicator

Switch the eBike battery off and remove it from its holder on the eBike. When doing so, read and observe the operating instructions of the eBike battery.

- ▸ **Ensure the eBike battery is placed on clean surfaces only.** Avoid getting moisture and dirt, e.g. sand or soil, in the charging socket and contacts.

Plug the charging connector **(5)** of the charger into the charging socket **(6)** on the eBike battery.

- ▸ **Ensure the charger's input plug and battery connector plug are both fully inserted into the electrical outlet and the battery's charge port.**

Charging the eBike Battery when Inserted in the eBike

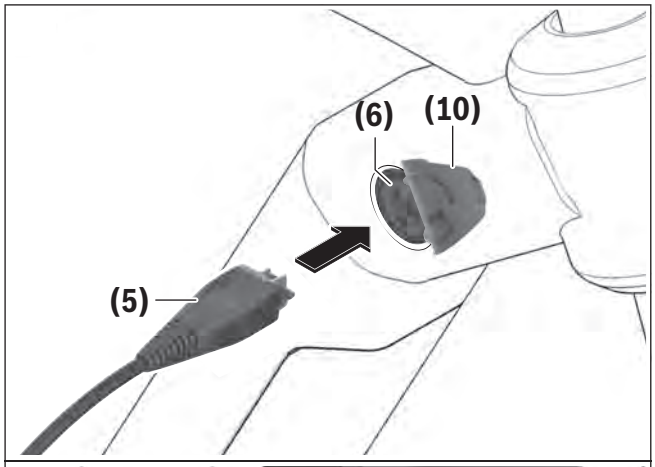

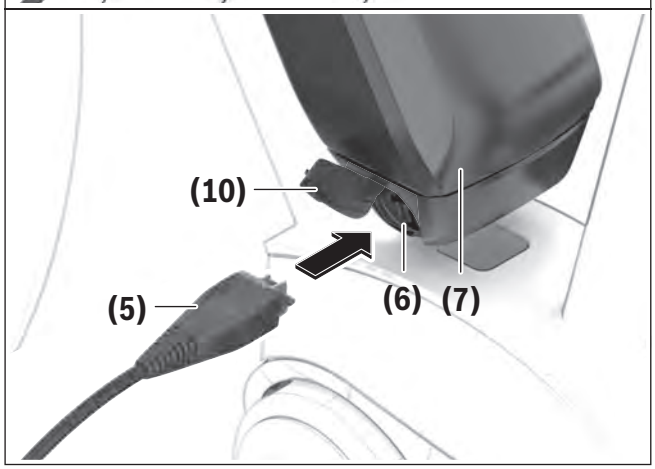

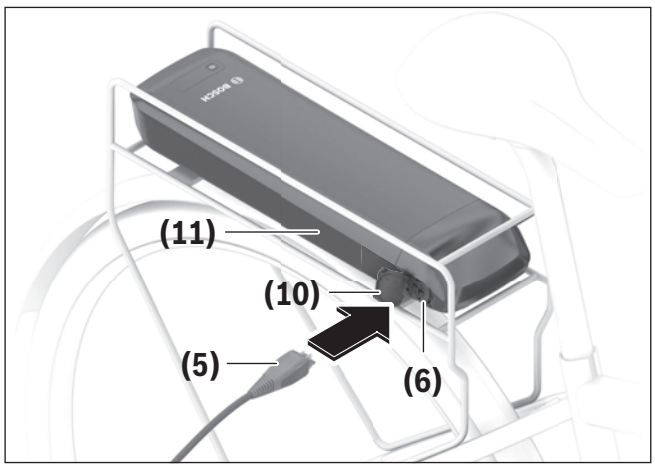

(5) Charging connector
(6) Socket for charging connector
(10) Charging socket cover

(7) PowerPack

(11) Rack-mounted battery

Clean the cover of the charging socket **(10)**. Avoid getting moisture and dirt, e.g. sand or soil, in the charging socket and contacts. This particularly applies to built-in eBike batteries.

Lift the cover of the charging socket **(10)** and plug the charging connector **(5)** into the charging socket **(6)**.

- ▶ **There is a risk of fire due to the charger heating up during charging. Ensure the eBike battery on the eBike is completely dry and placed on a fireproof surface before charging.** When doing so, read and observe the operating instructions of the eBike battery.

Using Two eBike Batteries for One eBike (optional)

The manufacturer can also equip an eBike with two eBike batteries.

If you want to use an eBike that is designed for two eBike batteries with only one eBike battery, cover the contacts of the unused socket using the cover, in order to protect the contacts from corrosion and dirt. If you have any questions or need further information, contact an authorized bike dealership.

Charging Process for Two eBike Batteries

If two eBike batteries are fitted to an eBike, you can charge both eBike batteries via the charging socket. First, the eBike battery that is more strongly discharged is charged to the level of the other battery. Both eBike batteries are then fully charged at the same time.

If you take the eBike batteries out of the holders, you can still charge each one individually (this does not apply to built-in eBike batteries).

When you install the PowerMore battery, the charging socket is occupied by the PowerMore battery cable. Charge the eBike batteries one after the other.

Charging process

The charging process begins as soon as the charger is connected to the eBike battery or charging socket on the eBike and to the mains.

Note: The charging process is only possible when the temperature of the eBike battery is within the permitted charging temperature range.

Note: The drive unit is deactivated during the charging process.

The eBike battery can be charged with and without the on-board computer. When charging without the on-board computer, the charging procedure can be observed on the battery charge indicator **(9)** and, where applicable, on the operating unit.

The state of charge is displayed by the battery charge indicator **(9)** on the eBike battery, the operating unit and, where applicable, the on-board computer.

The LEDs on the eBike battery charge indicator **(9)** flash during the charging process. Each solid illuminated LED represents approximately 20 % of the charging capacity. The flashing LED indicates the next 20 % currently charging.

Once the eBike battery is fully charged, the LEDs extinguish immediately and the on-board computer is switched off. The charging process is terminated. The state of charge can be displayed for **5** seconds by pressing the on/off button **(8)** on the eBike battery.

Disconnect the charger from the mains and the eBike battery or the eBike from the charger.

The eBike and eBike battery switch off automatically after being disconnected from the charger.

Note: If you have charged the battery on the eBike, carefully close the charging socket **(6)** with the cover **(10)** after charging, so that no dirt or water can get in.

If the charger is not disconnected from the eBike battery after charging, after a few hours the charger will switch itself back on, check the state of charge of the eBike battery and begin the charging procedure again if necessary.

Maintenance/cleaning

⚠ WARNING

- ▶ **Do not open any of the components. Service should only be carried out at an authorized Bosch eBike dealer.** Failure to follow above warning can cause death or serious injury. Refer to your bicycle manual or component manual for all non-Bosch drive system components.
- ▶ **Do not apply any cleaning agents, paint or chemicals to any components of the Bosch drive system as they may cause premature failure of the component.**

After-sales service and advice on using products

If you have any questions about the eBike and its components, contact an authorized bicycle retailer. For contact details of authorized bike dealerships, please visit www.bosch-ebike.com.



More information about the eBike components and their functions can be found in the Bosch eBike Help Center.

Troubleshooting

Note: For built-in eBike batteries, you can see the errors present on the **eBike Flow** app. Please adhere to the specifications stored on the **eBike Flow** app.

Cause	Corrective measures
 eBike battery defective	**Two LEDs flash on the eBike battery.** Contact an authorized bike dealership.
 eBike battery too warm or too cold	**Three LEDs flash on the eBike battery.** Disconnect the eBike battery from the charger until the charging temperature range has been reached. Do not reconnect the eBike battery to the charger until it has reached the correct charging temperature.
 The charger is not charging.	**No LEDs flashing (one or more LEDs will remain permanently lit depending on the state of charge of the eBike battery).** Contact an authorized bike dealership.
Charging not possible (no indicator on eBike battery)	
Connector not attached properly	Check all connections.
eBike battery contacts dirty	Carefully clean the eBike battery contacts.
Socket outlet, cable or charger defective	Check the mains voltage, have the charger checked over by a bike dealership.
eBike battery defective	Contact an authorized bike dealership.

Battery Recycling Program



The drive unit, on-board computer incl. operating unit, eBike battery, speed sensor, accessories and packaging should be disposed of in an environmentally correct manner.

Do not dispose of eBikes and their components with household waste.



You may recycle your Bosch battery pack by calling 1.800.822.8837.

Robert Bosch GmbH
72757 Reutlingen
Germany

www.bosch-ebike.com

0 275 U07 3CX (2024.03) T / 49

Owner’s Manual
ConnectModule

BCM3100



en Original operating instructions

This manual contains important safety, performance and service information. Read and understand it along with the information provided to you by your bicycle manufacturer before using the product, and keep it for reference.

Table of Contents

Introduction 2
About Warnings 2
General Warnings 2
Using your Manual 3
Operating your Bosch Drive System 4
Safety Instructions 4
Product description and specifications 5
Operation 6
Maintenance and Service 7
Maintenance and Cleaning 7
Transport 7
After-sales service and advice on using products 7
Battery Recycling Program 7

Introduction

About Warnings

This manual contains many **DANGER**, **WARNING**, and **CAUTION** indicators concerning the consequences of failure to use, assemble, maintain, store, inspect and dispose of a Bosch-equipped eBike in a safe manner.

– The combination of the safety alert symbol and the word **DANGER** indicates a hazardous situation that, if not avoided, will result in death or serious injury.
– The combination of the safety alert symbol and the word **WARNING** indicates a hazardous situation that, if not avoided, could result in death or serious injury.
– The combination of the safety alert symbol and the word **CAUTION** indicates a hazardous situation that, if not avoided, could result in minor or moderate injury.

General Warnings



Read all safety warnings and all instructions. Failure to follow the warnings and instructions may result in death or serious injury.

Save all safety warnings and instructions for future reference.

The term **eBike battery** used in these operating instructions refers to all original Bosch eBike batteries from the system generation **the smart system**.

▶ **Read ALL accompanying manuals before riding the bike for the first time.** Your Bosch Drive System comes with additional manuals and documents provided by the manufacturer of the bicycle and other components. Failure to read and understand safety information can result in death or serious injury.

⚠ WARNING

▶ **This manual contains important safety, performance and service information.** Read it before you take the first ride on your new bicycle, and keep it for reference. The manual can also be found online at www.bosch-ebike.com.

▶ **This manual is intended to be read together with the separate user manual provided with your bicycle.** Be sure to read all provided documents including labels on the product before your first ride.

▶ **Take responsibility for your own SAFETY.** If you have any questions or do not understand something, consult with your dealer or the bicycle or component manufacturer.

▶ **Some eBike accessories may present a choking hazard to small children.** Keep these accessories away from children.

⚠ CAUTION

▶ **The Bosch Drive System adds weight to your bicycle which you may not be used to lift.** Avoid injury, use proper lifting techniques.

Using your Manual

In addition to the functions outlined here, changes to software relating to troubleshooting and functional modifications may be introduced at any time.

Graphics

The bicycle shown in this manual may differ slightly from your bicycle, but will be similar enough to help you understand our instructions.

RIGHT-HAND and LEFT-HAND sides are determined by facing in the direction the bicycle will travel when going forward. When you see a broken line (------), the item referred to is hidden from view.

Operating your Bosch Drive System

Safety Instructions



Read all the safety and general instructions. Failure to follow the warnings and instructions may result in electric shock, fire and/or serious injury.

Save all safety warnings and instructions for future reference.

- ▶ **Read and observe the safety warnings and instructions in all operating instructions of the eBike components and your eBike.**
- ▶ **Only have the ConnectModule installed and repaired by a certified dealer.** This requires specialist expertise. If incorrectly installed, the ConnectModule, and therefore eBike, may no longer operate as required by law.
- ▶ **The ConnectModule features a wireless interface. There may therefore be operating restrictions in certain locations, e.g. in airplanes or hospitals.** Please also see the additional instructions below (see "Transport", page English – 7).
- ▶ Please note that certain State or local laws may require that class III eBikes must be equipped with a functioning speedometer that displays speed in miles per hour. Riders must be aware of any and all applicable rules and regulations related to the operation or use of class III eBikes in any applicable jurisdictions before operating or otherwise using this product.

NOTICE: This device complies with part 15 of the FCC Rules. Operation is subject to the following two conditions:

1. This device must not cause harmful interference, and
2. this device must accept any interference received, including interference that may cause undesired operation.

NOTICE: Changes or modifications made to this equipment not expressly approved by the Robert Bosch GmbH may void the FCC authorization to operate this equipment.

NOTE: This equipment has been tested and found to comply with the limits for a Class B digital device, pursuant to Part 15 of the FCC Rules. These limits are designed to provide reasonable protection against harmful interference in a residential installation. This equipment generates, uses and can radiate radio frequency energy and, if not installed and used in accordance with the instructions, may cause harmful interference to radio communications. However, there is no guarantee that interference will not occur in a particular installation. If this equipment does cause harmful interference to radio or television reception, which can be determined by turning the equipment off and on, the user is encouraged to try to correct the interference by one or more of the following measures:

- – Reorient or relocate the receiving antenna.
- – Increase the separation between the equipment and receiver.
- – Connect the equipment into an outlet on a circuit different from that to which the receiver is connected.
- – Consult the dealer or an experienced radio/TV technician for help.

Radiofrequency radiation exposure Information:

The device complies with FCC radiation exposure limits set forth for an uncontrolled environment. This equipment has been tested for compliance with SAR limits, the highest reported SAR value is 1.45 W/kg for Body-worn at 0 mm separation, and 0.62 W/kg for extremity at 0 mm separation.

ISED Notice (Canada)

This device contains licence-exempt transmitter(s)/ receiver(s) that comply with Innovation, Science and Economic Development Canada’s licence-exempt

RSS(s). Operation is subject to the following two conditions:

1. this device may not cause interference, and
2. this device must accept any interference, including interference that may cause undesired operation of the device.

This device has been tested for compliance with SAR limits, the highest reported SAR value is 1.45 W/kg for Body-worn at 0 mm separation, and 0.62 W/kg for extremity at 0 mm separation.

Product description and specifications

Intended Use

The ConnectModule is exclusively for use in combination with an eBike from the system generation **the smart system**, particularly for tracking eBikes in the event of theft.

The ConnectModule can only be used with the related features from the app **eBike Flow**. Consequently, to use ConnectModule, you must have a mobile device on which the app **eBike Flow** is downloaded and installed.

Depending on the operating system of the smartphone, the **eBike Flow** app can be downloaded free of charge from the Apple App Store or Google Play Store.

Scan the code with your smartphone to download the **eBike Flow** app.

Technical Data

		ConnectModule
Product code		BCM3100
Internal battery	V mAh	4.35 650
External battery connection	V	12
Frequency band LTE Cat-M1	MHz	B1 (2100 MHz) B2 (1900 MHz) B3 (1800 MHz) B4 (1700 MHz) B5 (850 MHz) B8 (900 MHz) B12 (700 MHz) B13 (700 MHz) B20 (800 MHz) B28 (700 MHz)
Transmission power	dBm	21
Weight, approx.	lb	0.1
Operating temperature	°F	23 to 104
Storage temperature	°F	50 to 104
Protection rating		IP55

Operation

The ConnectModule requires a working GPS and mobile data connection in order to function.

The ConnectModule has motion sensors, a global positioning system and mobile communications. These enable the ConnectModule to identify suspicious movements of the eBike, establish the location of the eBike and sound an alarm on the bicycle itself.

Position and movement data is displayed to the owner of the eBike through the app **eBike Flow**.

The ConnectModule thereby also facilitates other services, such as **<eBike Alarm>**, which is provided upon subscribing to **Flow+ subscription**. Fees may be payable for this.

Further information about the **Flow+ subscription**, as well as details about the individual services, can be found in the **eBike Flow** app or in the Bosch eBike Help Center.

Start-up

As soon as a ConnectModule is installed in an eBike, it can be activated once the **Flow+ subscription** subscription is confirmed.

Services such as **<eBike Alarm>** can be activated and used via the **eBike Flow** app.

The ConnectModule services can be deactivated at any time via the **eBike Flow** app and reactivated again when **Flow+ subscription** is running.

Deactivation of the ConnectModule itself is not provided.

Switching on/off

The ConnectModule does not have to be switched on or off separately.

As long as the ConnectModule is supplied with voltage and the relevant services are activated, it sends data to the eBike owner.

The ConnectModule has an internal battery so that it can provide the services independently of the eBike battery. The internal battery's state of charge can be viewed via the **eBike Flow** app. When the internal battery's state of charge is low, the transmission intervals for the position are reduced. If the internal battery's state of charge is critical, an eBike battery should be inserted and the Bosch eBike charger should be connected.

Switching On Whilst eBike Alarm is Active

If you move your eBike whilst the **<eBike Alarm>** is active, the alarm will not go off provided the predefined digital key (smartphone or on-board computer **Kiox 300/Kiox 500**) is present.

To set off on your eBike, press the on/off button on the operating unit.

For eBikes with assistance up to **28 mph**, you also need to actively select a mode after turning it on.

Maintenance and Service

Maintenance and Cleaning

The ConnectModule requires no maintenance. In the event of damage or fault, contact an authorized dealer directly.

If services are not functioning despite being activated, please get in direct contact with the bicycle dealer from whom you bought the ConnectModule.

Note: If you are handing in your eBike to a bicycle dealer for maintenance, it is recommended that you deactivate **<Lock & Alarm>**.

Transport

Whenever you transport your eBike (e.g. in a car trailer, on a train or plane, etc.), we recommend deactivating all the individual services or activating the **<Transport mode>**. This will then deactivate any communication from the ConnectModule. This will prevent alarms being falsely triggered.

After-sales service and advice on using products

If you have any questions about the eBike and its components, contact an authorized bicycle retailer.

For contact details of authorized bike dealerships, please visit www.bosch-ebike.com.

More information about the eBike components and their functions can be found in the Bosch eBike Help Center.

Battery Recycling Program

The drive unit, on-board computer incl. operating unit, eBike battery, speed sensor, accessories and packaging should be disposed of in an environmentally correct manner.

Do not dispose of eBikes and their components with household waste.

You may recycle your Bosch battery pack by calling 1.800.822.8837.

Robert Bosch GmbH
72757 Reutlingen
Germany

www.bosch-ebike.com

0 275 U08 3CM (2024.03) T / 25

CONTACT

Addres and telephone number:

Trek US
Customer Service
801 W Madison street,
Waterloo, Wisconsin 53594
USA

Telephone number: 920.478.4678
Internet: www.trekbikes.com

Limited warranty
Your bicycle is covered by a Lifetime Limited Warranty. Please visit our web site for details.
For Service and Warranty, please contact your local dealer.

Please refer to the website (Menu/Support) for the latest revision of this manual.
New features, as described in the latest manual, may not be applicable on your electric bike.

TK25 Bosch The Smart System EN-US (20 mph) Rev. 1
June 2024
© 2024 Trek Bicycle Corporation. All rights reserved.

TK25 Bosch The Smart System EN-US (20mph) Rev. 1
June 2024