

2023 Powerfly FS

Gen 3 FS 9 EQ, FS 7, FS 4 EQ, and FS 4

SERVICE MANUAL

Contents


Safety

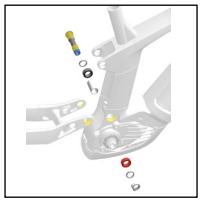
Main pivot and chainstay

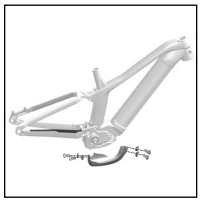
Frame guards

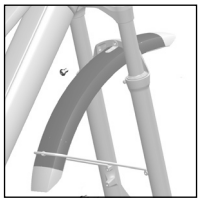
Front fender



Remote and displays


Speed sensor

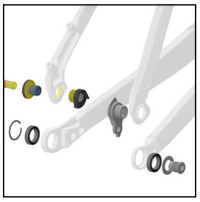
Active Braking Pivot (ABP)

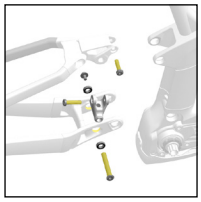
Shock mounts

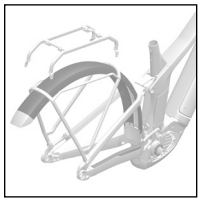
Full-size rear fender and rack


RIB — battery assembly

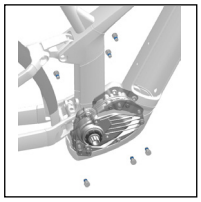
Drive unit and mounting bolts

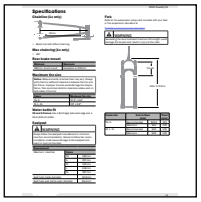
Specifications

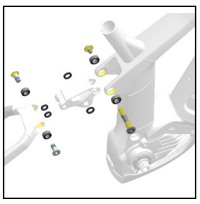
Rocker pivot and seat stay


Cable routing


Mini rear fender


RIB — docking assembly


Battery charge port cover

Safety

WARNING

Properly tighten hardware

Always tighten hardware to the specified torque. Over-tightening hardware could deform or break the hardware or components. Under-tightening hardware could cause hardware or components to become loose. Either situation could damage the bicycle and result in injury to the rider.

WARNING

Reapply threadlocker

All reused-fasteners with pre-applied threadlocker must be cleaned with isopropyl alcohol and have new thread-locker applied before re-assembly. If threadlocker is not applied, the fasteners may loosen which could damage the bicycle and result in injury to the rider.

Legend


Apply grease


Do not apply grease


Apply threadlocker

Nm — Torque


Hex tool size


Torx tool


Drift size


Zip tie

Copyright 2022 Trek Bicycle Corporation All Rights Reserved

Active Braking Pivot (ABP)

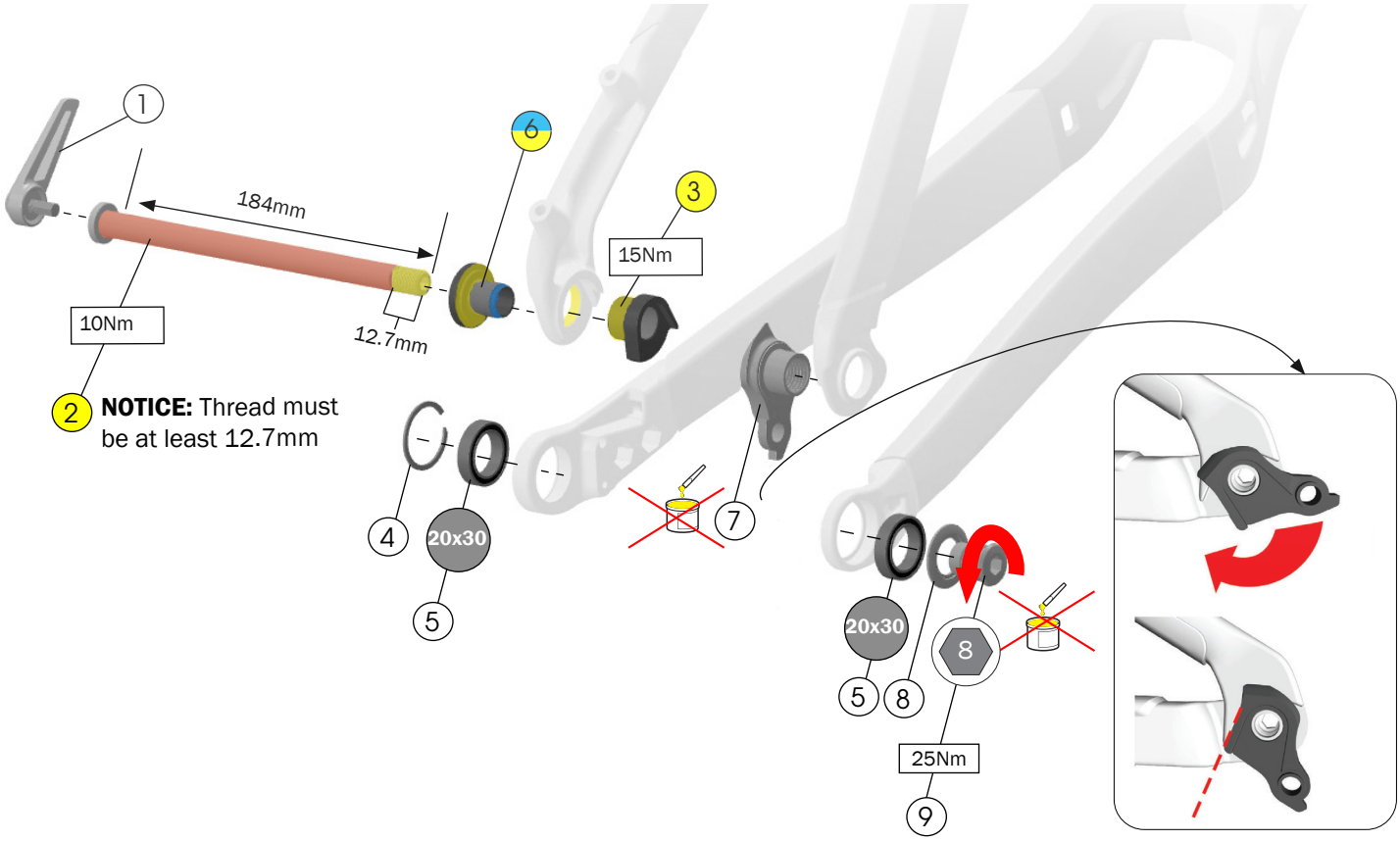

1. Switch lever — W573860
2. Thru axle — W583469
3. Non-driveside ABP dropout nut — W5269707
4. Retaining ring — W5251279
5. Bearings — W5256340
6. Non-driveside ABP bolt — W5251141

— W5272776

7. Derailleur hanger
8. Washer
9. Bolt (left-hand thread)

— W5271425

Tools

- Bearing press, 20x30 drift
- Cassette lockring tool
- Grease
- 8mm hex tool
- Torque wrench (left-hand thread) with 8mm hex bit

This bicycle frame is designed to use a Universal Derailleur Hanger (UDH).

WARNING

Do not apply grease to the derailleur hanger or bolt. Apply grease to only the thru axle.

NOTICE: The washer (8) is frame-specific. Install only the washer compatible with your frame.

NOTICE: Do not over-tighten (9). Over-tightening the bolt could cause the hanger to break.

For additional information about the UDH, refer to the SRAM user manual at www.sram.com.

Rocker pivot and seatstay

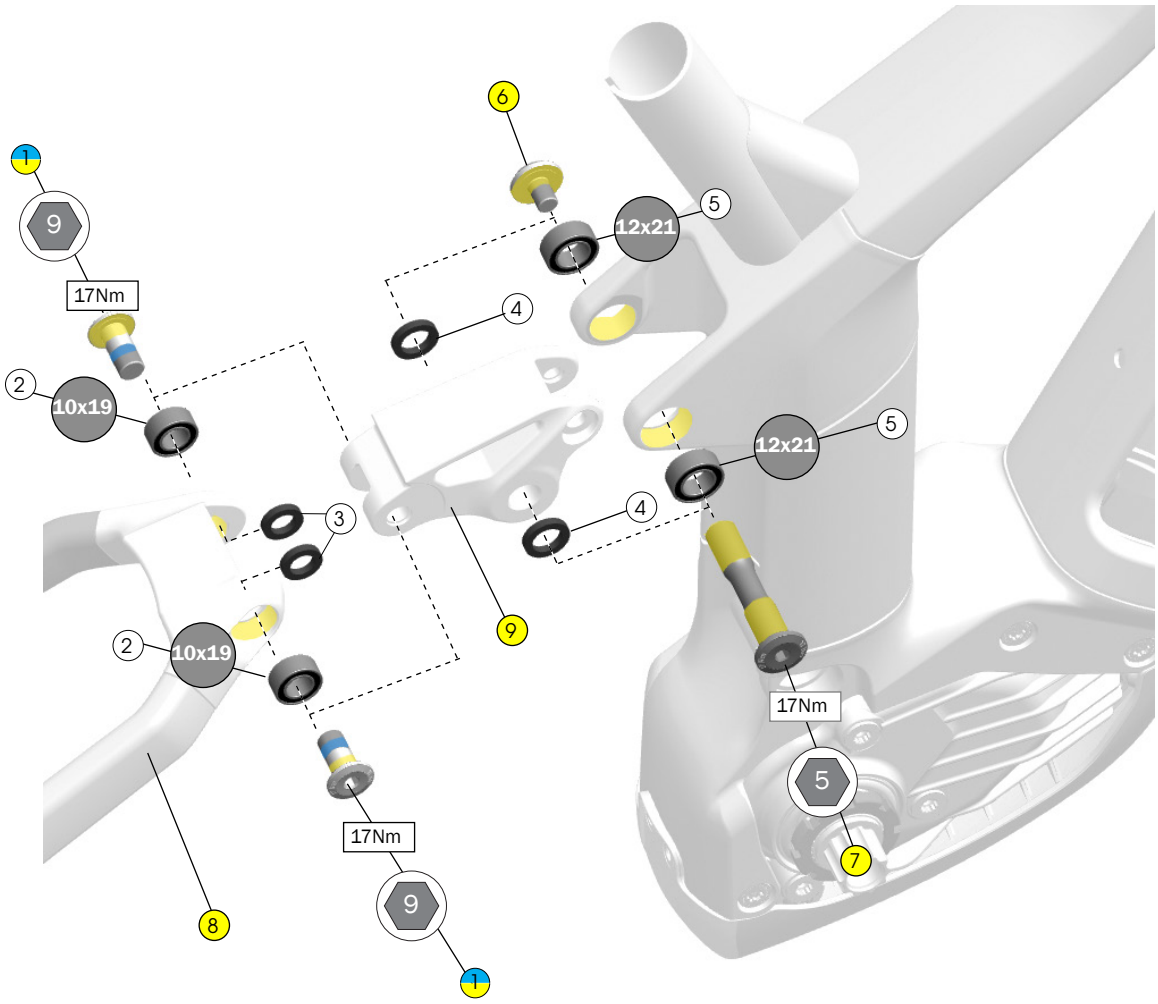

1. Seatstay bolts, M10 x 21mm — W1051358
2. Seatstay bearings, 10 x 19 x 8mm — W5256339
3. Spacers, 16 x 10 x 3mm — W529969
4. Spacers, 18 x 12 x 3mm — W574411
5. Rocker pivot bearings, 12 x 21 x 8mm — W5256341
6. Rocker pivot axle nut, M8 x 11mm
7. Rocker pivot axle, M16 x 83mm

— 5256640

8. Seatstay — 44376
   Search trekbikes.com to find the color-matched part for your bike.
9. Rocker link — 33983
   Search trekbikes.com to find the color-matched part for your bike.

Tools

- Bearing press, 10 x1 9 and 12 x 21 drifts
- 5mm and 9mm hex wrenches
- Torque wrench with 5mm and 9mm hex bits

Main pivot and chainstay

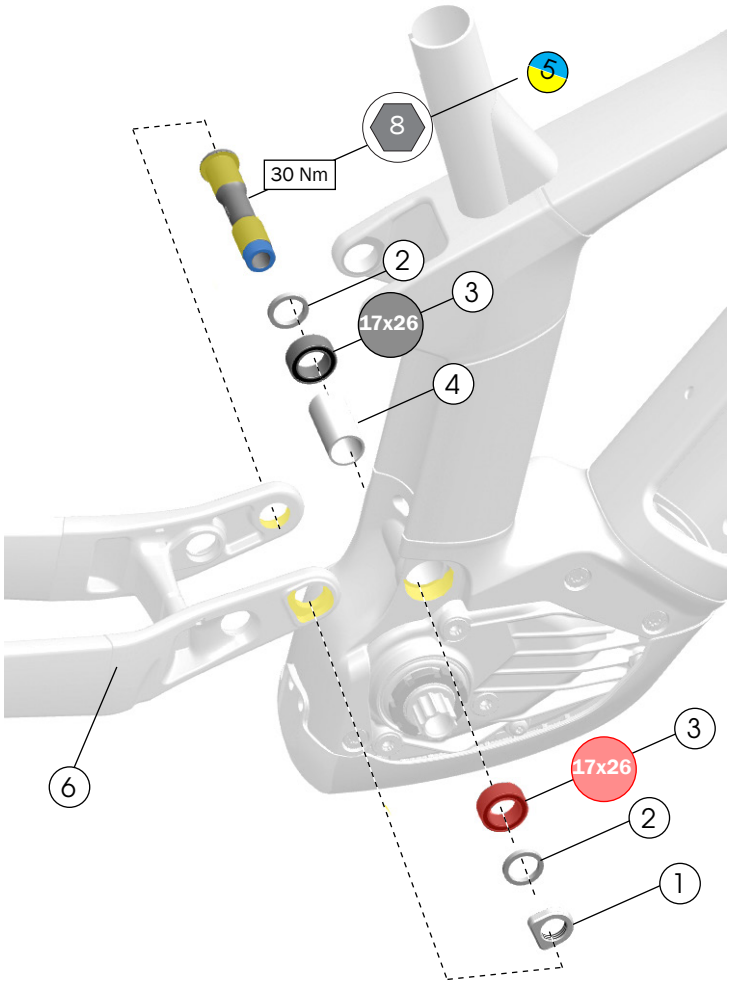

Important: Install driveside bearing first.

1. Nut, M16 x 1.5mm — W584134
2. Spacers, 22 x 17 x 3mm — W440921
3. Bearings, 17 x 26 x 10mm — W5256338
4. Main pivot sleeve — W500592
5. Main pivot axle, M8 x 62.5mm — W601376

— 5256639

6. Chainstay — 44377
   Search trekbikes.com to find the color-matched part for your bike.

Tools

- Bearing press, 17 x 26 drift
- 8mm hex tool
- Torque wrench with 8mm hex bit
- Grease

Shock mounts

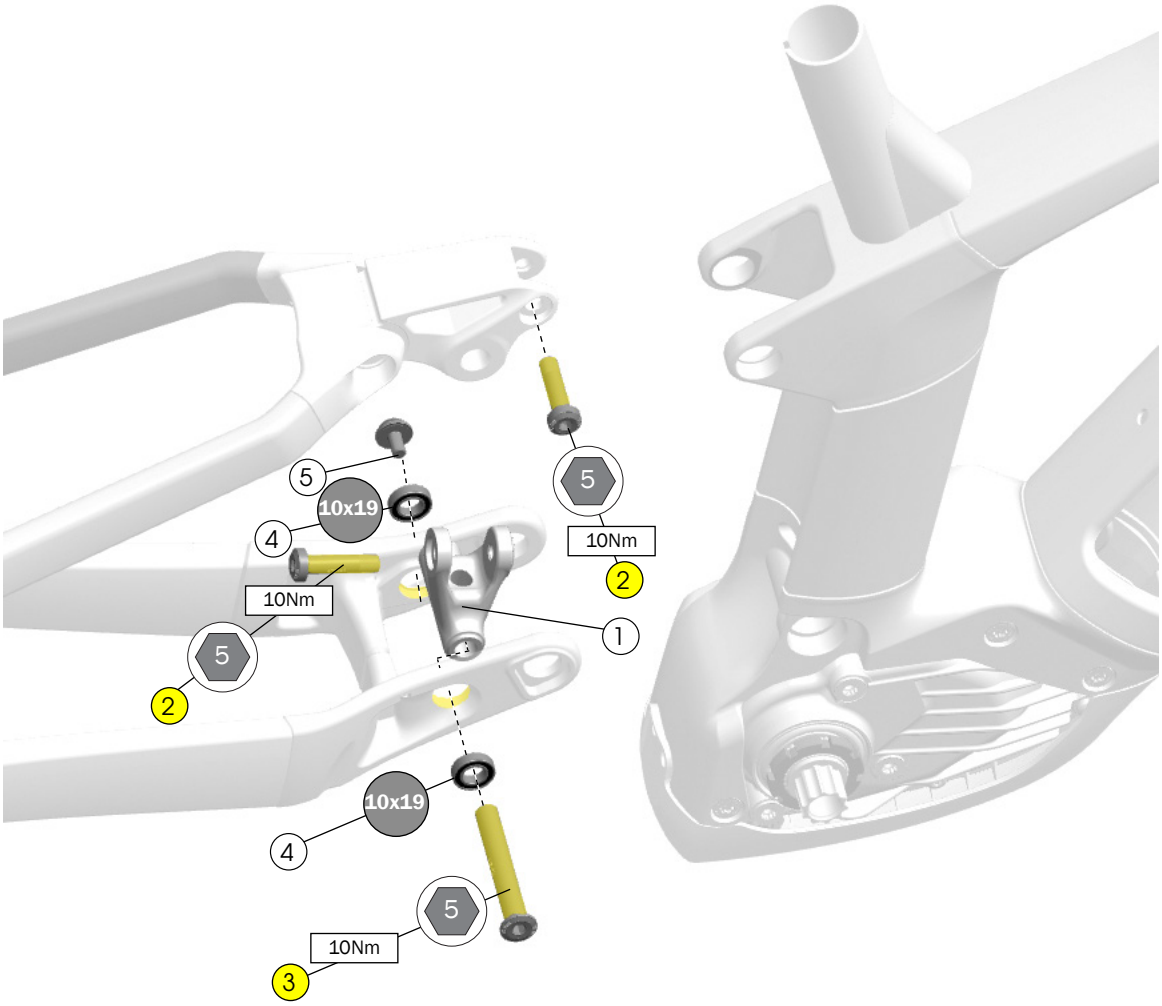

Tools

- Bearing press, 10 x1 9 drift
- 5mm hex tool
- Torque wrench with 5mm hex bit
- Grease

(1) Shock linkage — 5256637

(2) Upper shock bolt, M8 x 33mm — W600364

(3) Lower shock axle, M6 x 69mm — 5256638

(4) Bearings, 10 x 19 x 5mm — W5256337

(5) Lower shock bolt, M6 x 11mm — 5256638

Dimensions



Shock Dimensions
Eye-to Eye-length: 190mm

Stroke length: 45mm

Upper width: 20mm

Lower width: 20mm

Cable routing

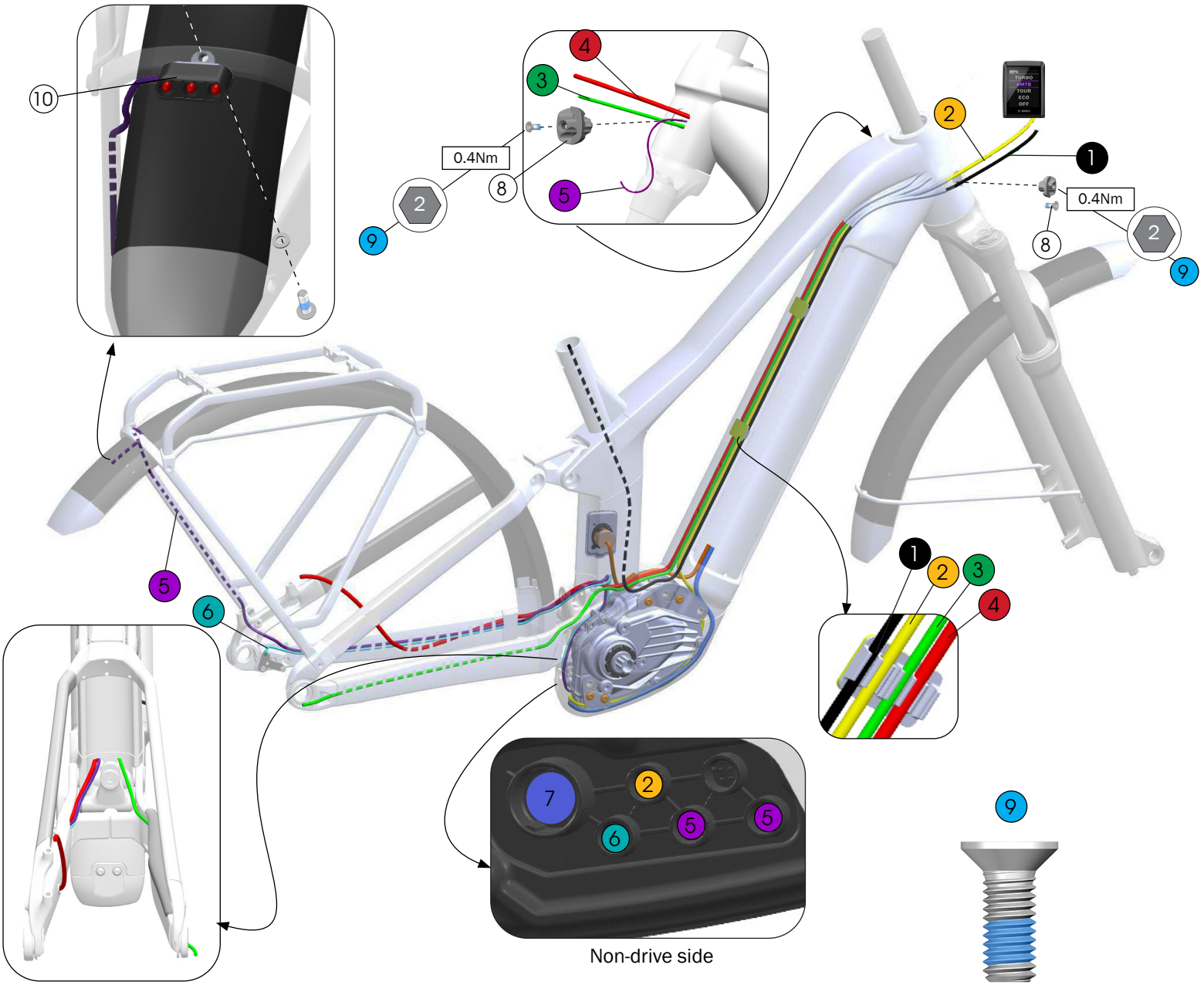

1. Dropper post cable
2. Display cable — EB12.120.005*
3. Derailleur housing
4. Rear brake hose
5. Light cables (Lights included only on Powerfly Equipped models)
6. Speed sensor cable
7. Battery power cable — EB12.120.04A*
8. Housing guides — W594006
9. Bolts, M3 x 10mm — W285213
10. Supernova Powerfly Cargo Rack E3 Tail Light 2 — W1047565

*Bosch part number. Not available on trekbikes.com.

Frame guards

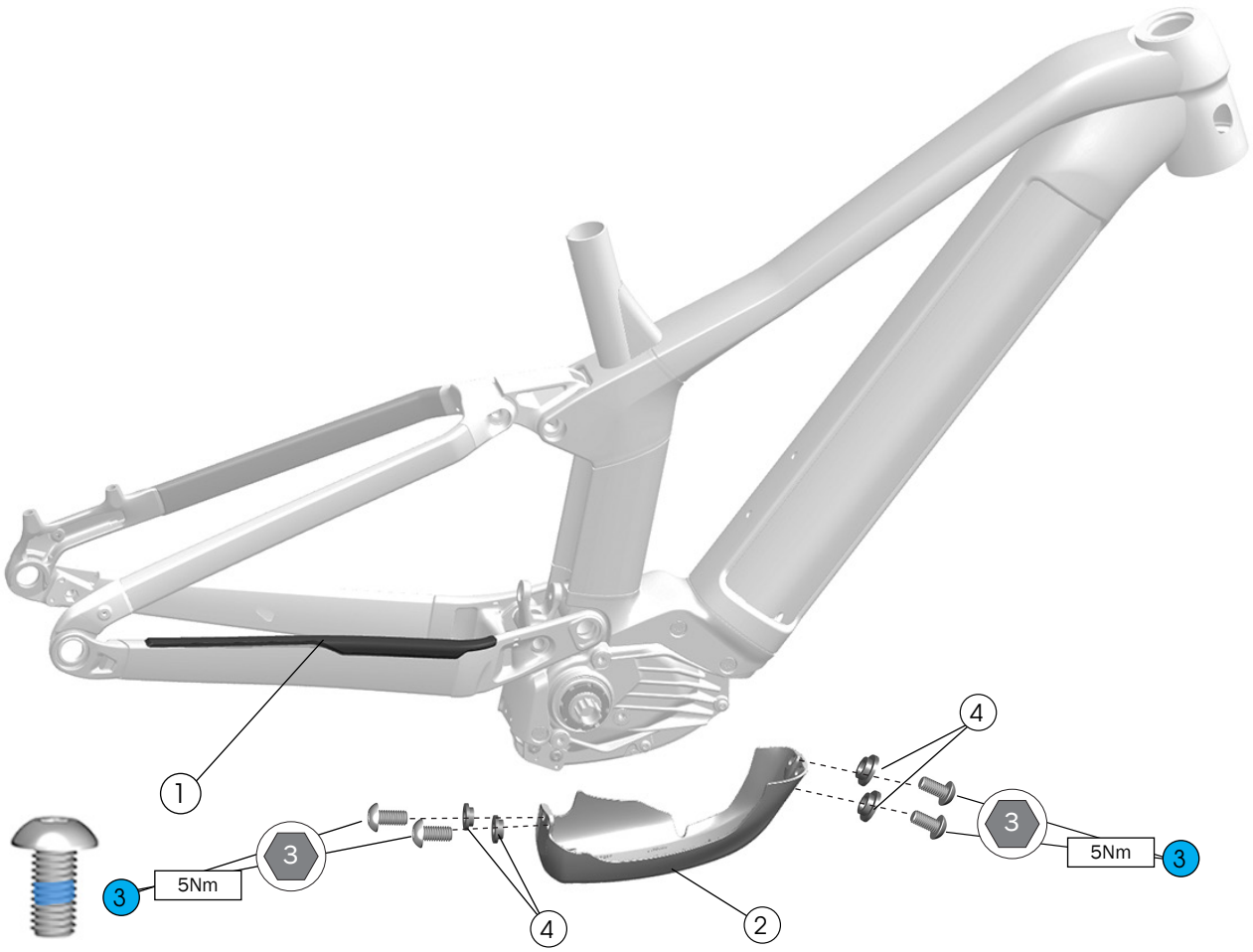

1. Chainstay guard — W587594
2. Drive unit guard — W5269899
3. Screws, stainless steel, M5xx10 — W549305
4. Top hat spacers — W5272256

Adhesive guards (1)

Use isopropyl alcohol to clean the frame surface where the guard attaches. Wait for the alcohol to dry before applying the guard.

Notice: Do not clean the entire frame with isopropyl alcohol. Isopropyl alcohol could damage the paint.

Full-size rear fender and rack

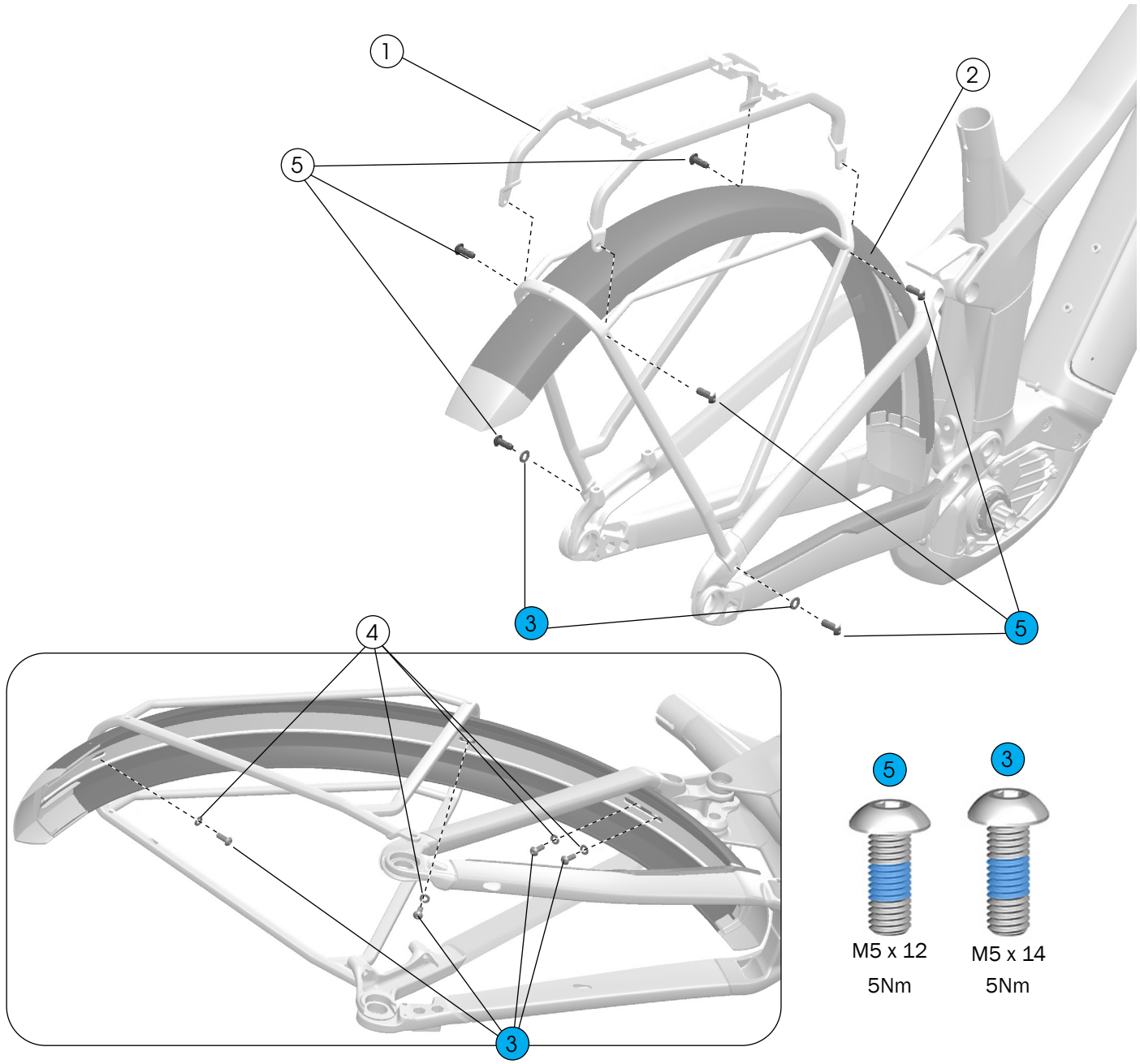

1. Rear rack — W5289962
2. Rear fender — W600725
3. Bolts, stainless steel , M5 x 14mm
4. Washers, stainless steel, M5 x 1mm

— 5251710

5. Bolts, stainless steel , M5 x 12mm — W584855

Mini rear fender

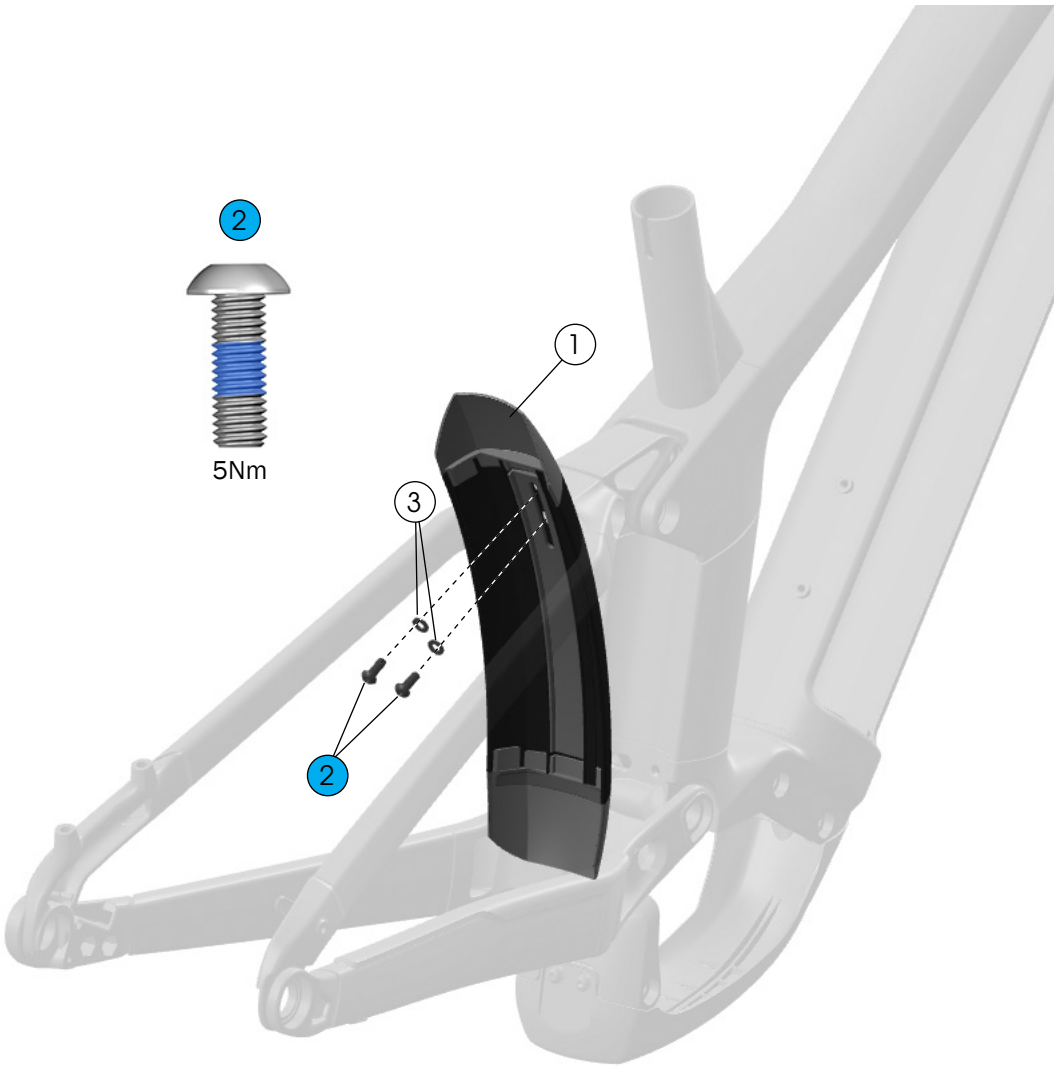

1. Mini fender — W1040072
2. Bolts, stainless steel, M5 x 14mm,
3. Washers, flat, stainless steel, M5 x 1mm

— 5251710

Front fender

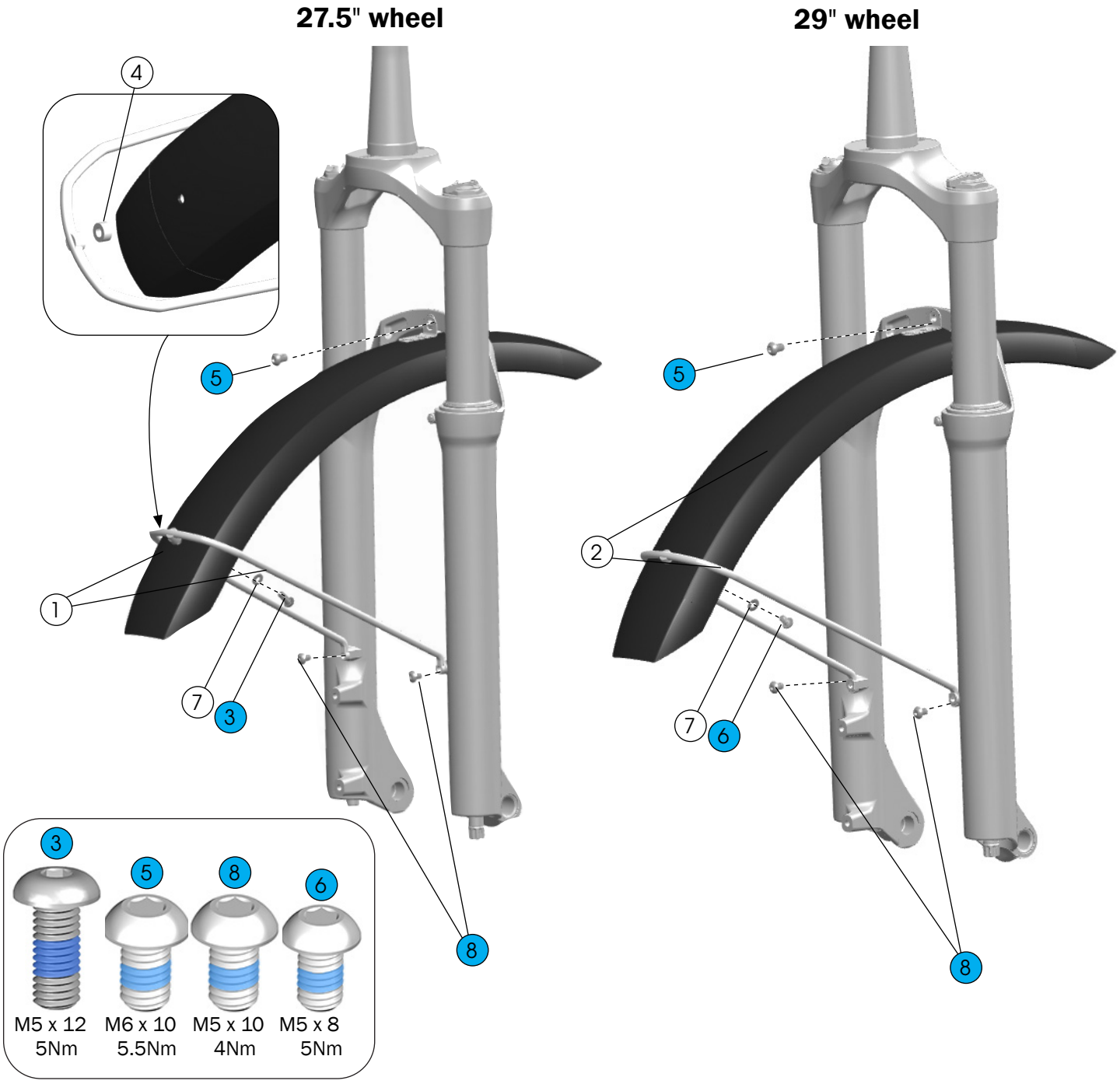

1. Front fender and strut, 27.5” — 601256
2. Front fender and strut, 29” — 601257
3. Screw, M5 x 12mm, stainless steel — W584855
4. Washer, nylon — W506324
5. Bolt, M6 x 10mm, stainless steel (Longer bolt may be required if using a light mounting bracket)
6. Bolt, M5 x 8mm, stainless steel
7. Washer, M5 x 1mm, stainless steel

— 601267

8. Bolts, M5 x 10mm, stainless steel — W549305

*Fender parts for 29 wheel are compatible with only the originally equipped SR SUNTOUR fork.

RIB — battery assembly

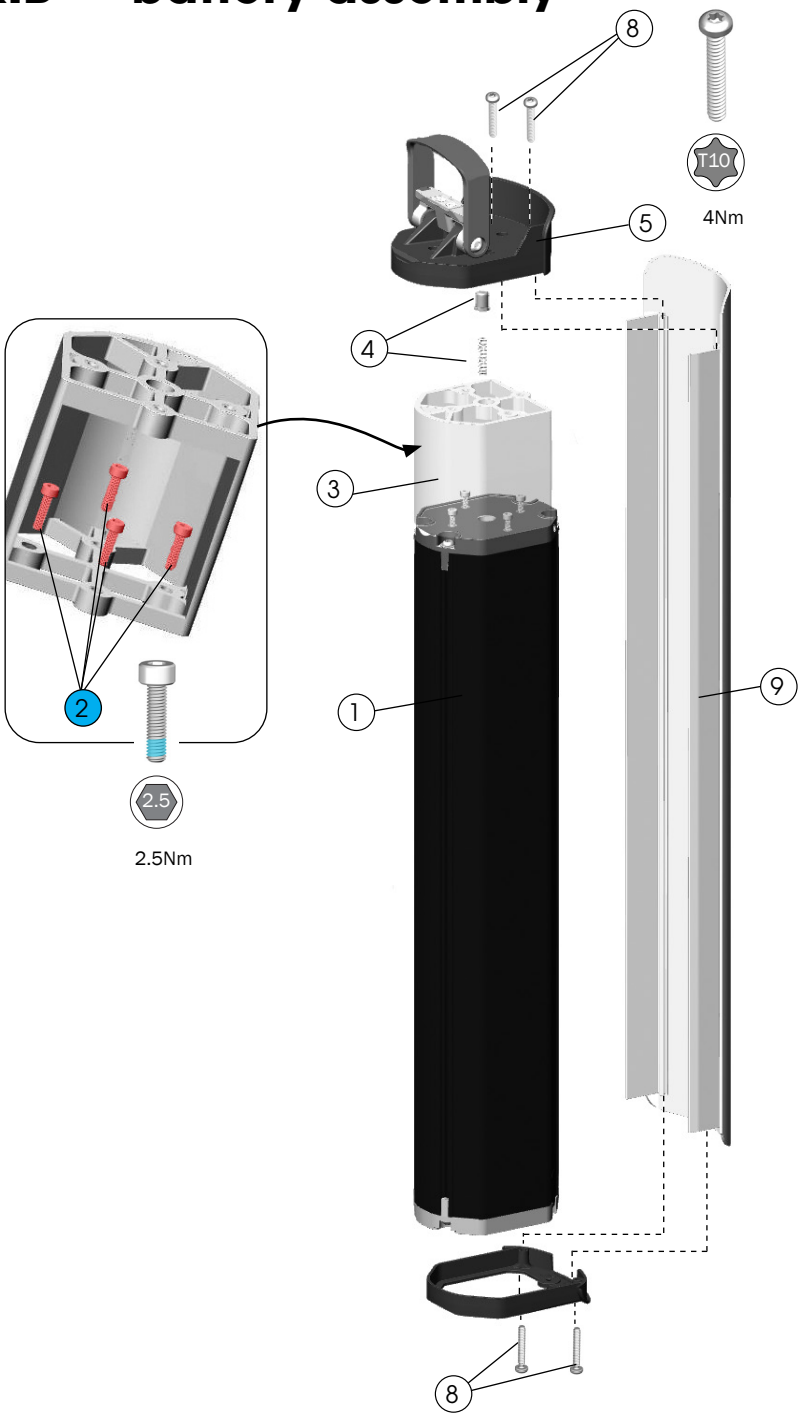

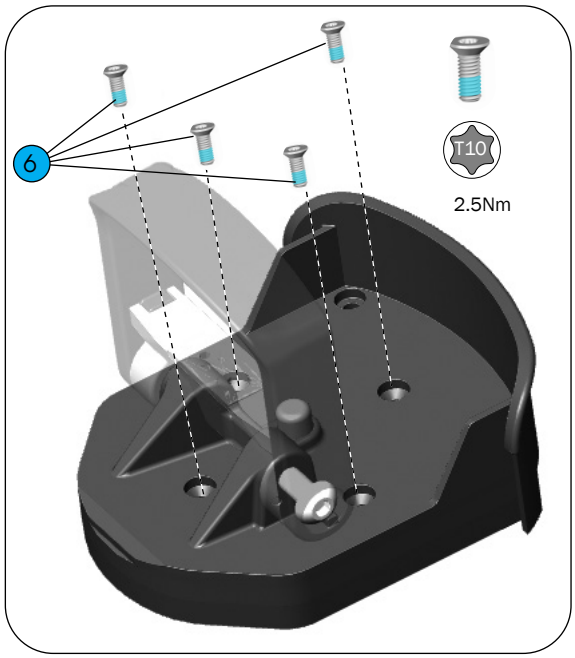

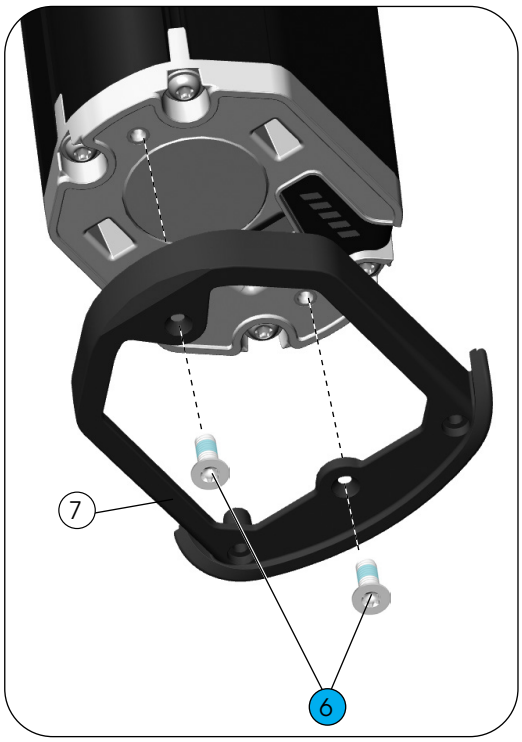

1. Battery, Vertical, Smart System,
   500Wh — EB12.100.018*
   625Wh — EB12.100.012*
2. Socket head screws, M3 x 12mm — W5257054
3. Spacer (for use with 500Wh battery) — W5252256
4. Push pin and spring — 5312675
5. Battery handle assembly — W5252236

*Bosch part number. Not available on trekbikes.com.

6. Bolts, M3 x 8mm — W5269016
7. Docking bracket — W5252240
8. Bolts, M3 x 20mm — W5254060
9. Cover — 44370
   Search trekbikes.com to find the color-matched part for your bike.

RIB — docking assembly

Lower assembly

Upper assembly

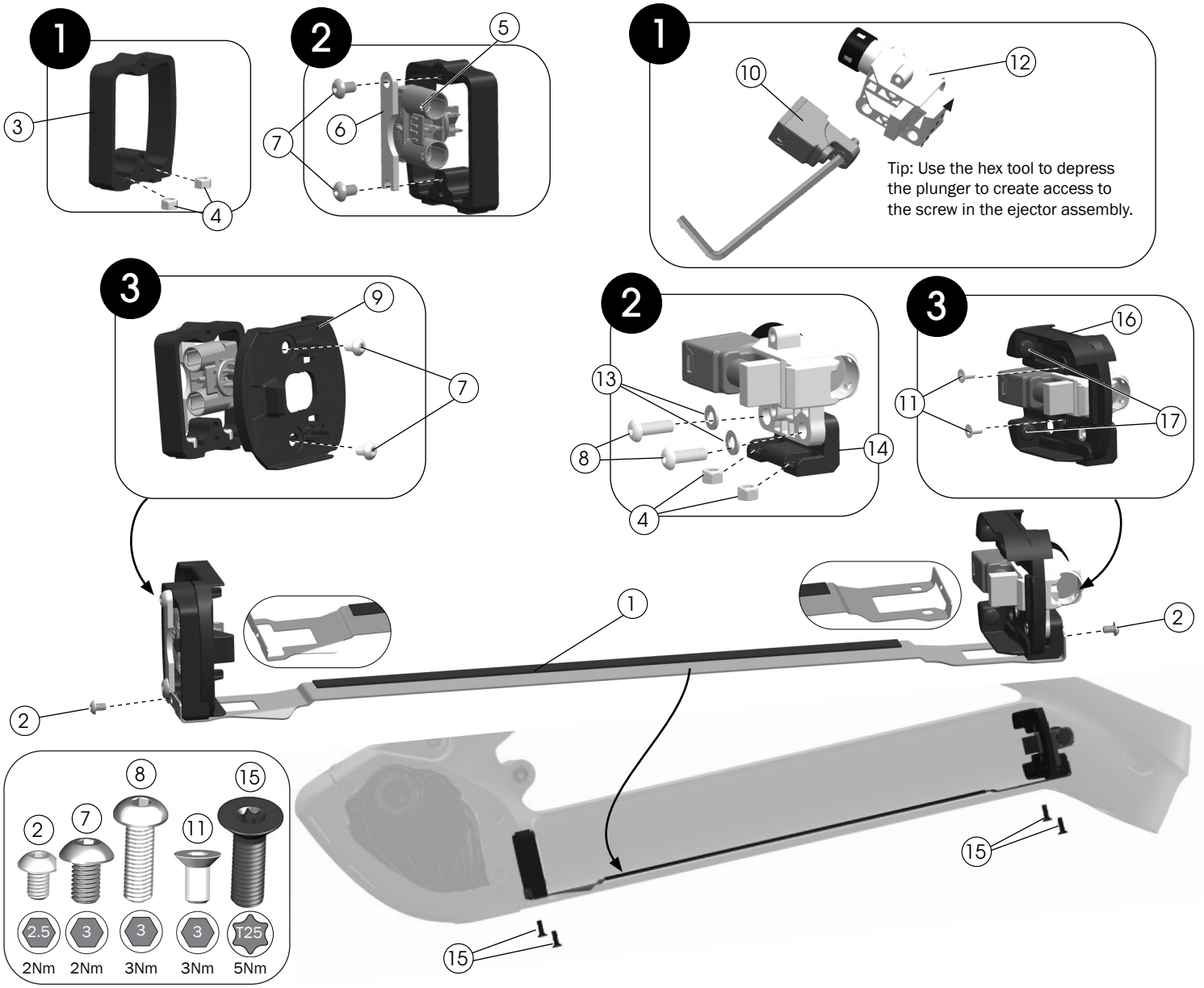

- 1 Alignment plate — W5252805
- 2 Screws
- 4 Locknuts
- 8 Screws
- 11 Countersunk bolts
- 15 T25 security screws
- 13 Washers

— 5257257

- 3 Lower docking bracket
- 14 Upper docking bracket

— 5277571

- 5 Battery connection plug — EB12.100.015*
- 6 Power connection retention bracket
- 7 Screws — W549307

— 5312122

- 9 Lower battery mounting plug — W5252293
- 16 Upper lock cover — W5252292
- 17 Bumpers — 579326
- 10 Ejector assembly — 579324
- 12 Lock assembly — W562311

*Bosch part number. Not available on trekbikes.com.

Remote and displays

LED remote

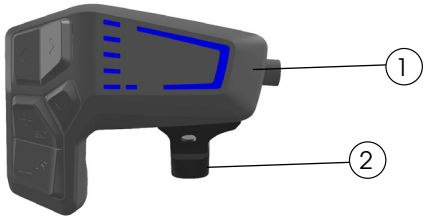

1. LED remote — 5288736
2. LED remote universal clamp — 5288743

Kiox 300



Kiox 300 — 5288735

Intuvia 100



Intuvia 100 — EB13.100.00F

*Bosch part number. Not available on trekbikes.com.

Drive system components

Drive unit and mounting bolts

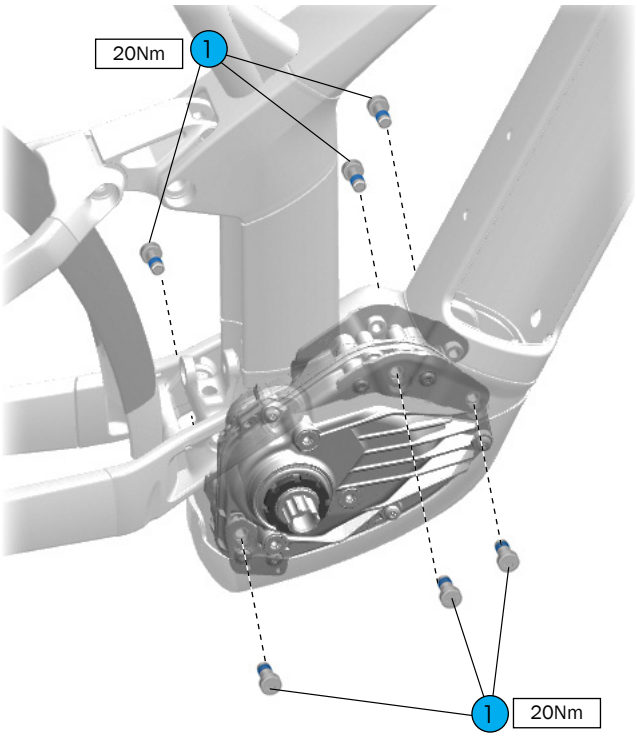

1 Mounting bolts, TP40 — 5265419

Speed sensor

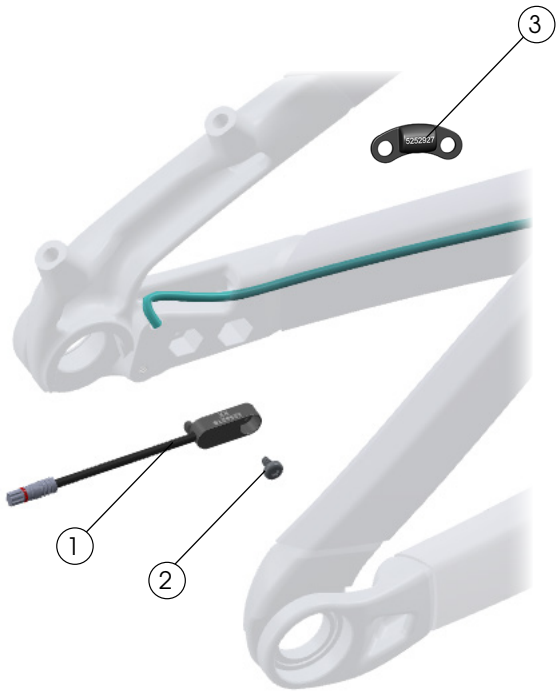

1 Speed sensor — 5284750

2 Bolt — W562831

3 Rotor mount speed sensor magnet — W5252927

Battery charge port cover

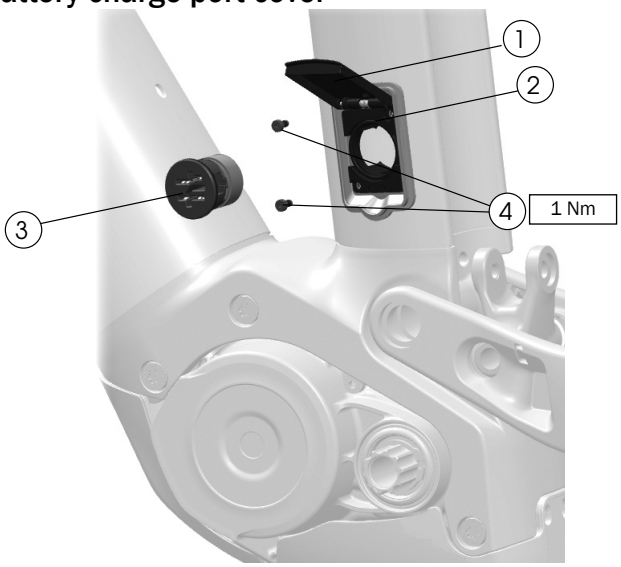

1 Charge port cover — 44373
Search trekbikes.com to find the color-matched part for your bike.

2 Base — W5251862

3 Charge socket — EB12.120.04A*

4 Bolts, M3 x 6mm — W5276241

*Bosch part number. Not available on trekbikes.com.

Specifications

Chainline (1x only)

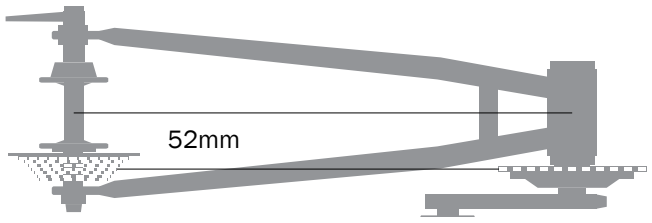

- Boost hub with offset chainring.

Max chainring (1x only)

- 46T

Rear brake mount

Minimum	Maximum
180mm, direct mount	Adaptable to 203mm

Maximum tire size

Notice: Measurements of actual tires may vary. Always verify there is sufficient clearance between the tire and the frame. Improper tire size could damage the bicycle frame. Trek recommends 6mm clearance above and on both sides of the tire.

Frame	Maximum tire size
XS, S	27.5" x 2.6"
M, L, XL	29" x 2.6"

Water bottle fit

XS and S frames: Use a Bontrager side-load cage and a 21oz (621ml) bottle.

Seatpost

WARNING

Always follow the seatpost manufacturer's minimum insertion recommendation. Failure to follow the recommendation could cause damage to the seatpost and result in injury to the rider.

Measurement		
Maximum insertion	Frame	
	XS	180mm
	S	207mm
	M	215mm
	L	246mm
	XL	297mm
Seat tube inside diameter		31.6mm
Seat tube post clamp outer diameter		36.4mm

Fork

Refer to the suspension setup card included with your bike or the suspension calculator at

Trekbikes.com/suspension-calculator.

WARNING

Exceeding the recommended maximum fork length could damage the bicycle and result in injury to the rider.

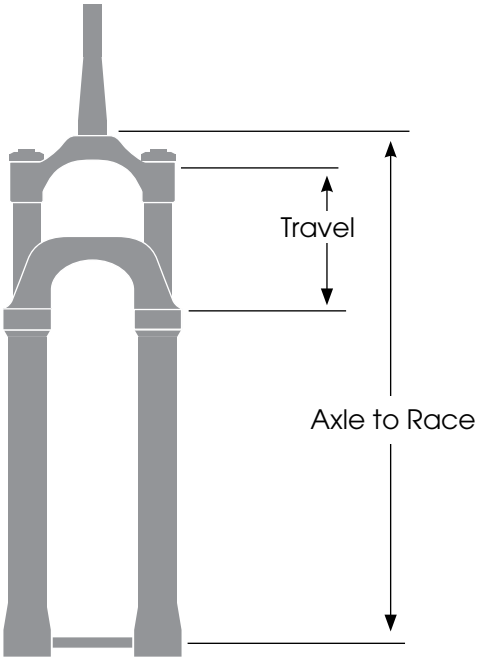

Frame size	Axle to Race (mm)		Travel (mm)
XS, S	Recommended	505.5	100
	Maximum	520	120
M, L, XL	Recommended	540	120
	Maximum	545	120