

2023 Farley
Carbon 9.6
SERVICE MANUAL

Contents

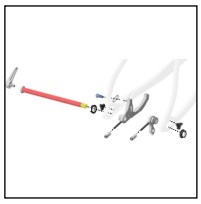
Front and rear dropouts


Frame guards

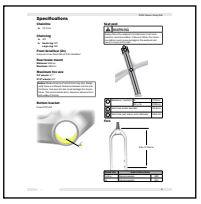
Specifications

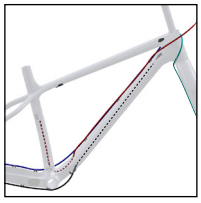
Routing — 1x


Fork and frame mounts

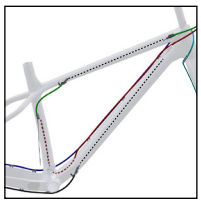
Routing — Optional 2x


Front rack (Available separately)

Safety

WARNING

Properly tighten hardware

Always tighten hardware to the specified torque. Over-tightening hardware could deform or break the hardware or components. Under-tightening hardware could cause hardware or components to become loose. Either situation could damage the bicycle and result in injury to the rider.

WARNING

Reapply threadlocker

All reused-fasteners with pre-applied threadlocker must be cleaned with isopropyl alcohol and have new thread-locker applied before re-assembly. If threadlocker is not applied, the fasteners may loosen which could damage the bicycle and result in injury to the rider.

Legend

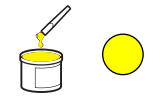
Apply grease


Do not apply grease

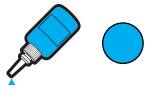
Apply threadlocker

Nm — Torque


Hex tool


Torx tool


Drift tool


Zip tie

Copyright 2023 Trek Bicycle Corporation All Rights Reserved

Front and rear dropouts

Sliding rear dropout

For information about adjusting the sliding drop out, watch the video *How To: Adjust Horizontal Sliding Dropouts* on Trek's YouTube channel.

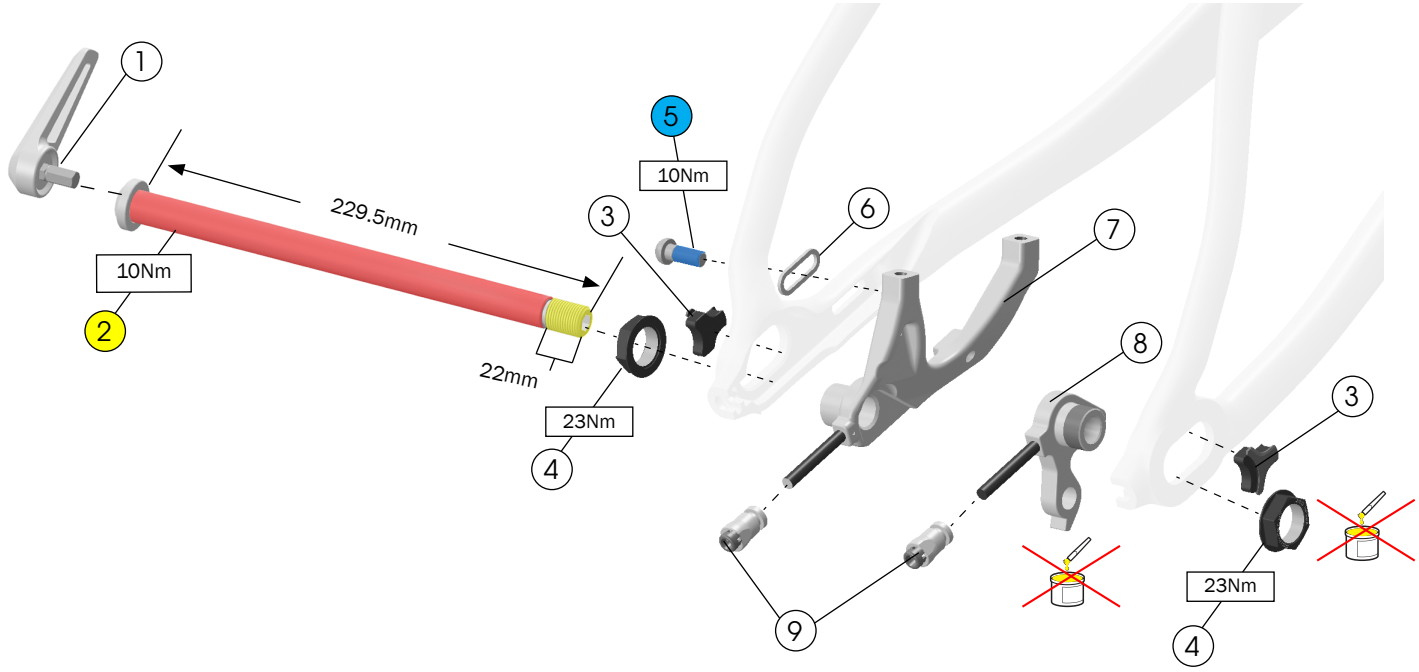

1. Switch lever — W573860
2. Rear thru axle, 12 x 229mm — W565795
3. Dropout inserts are original equipment only. No replacement part available. Dropout inserts move the rear axle backward to create proper tire clearance. If not using the dropout inserts , ensure the sliding dropout hardware (4) is positioned to create proper tire clearance.
4. Closed convert hardtail and horizontal sliding dropout hardware, M12 x 1mm — W318004
5. Bolt, M6 x 16mm
6. Washer, stainless steel
7. Non-driveside drop out
8. Driveside slider with derailleur hanger — W504671
9. Slider retention nuts

— 517009

10. Carbon fork — 5311796
11. Front thru axle, 15 x 198.5mm — W565810

Front dropout

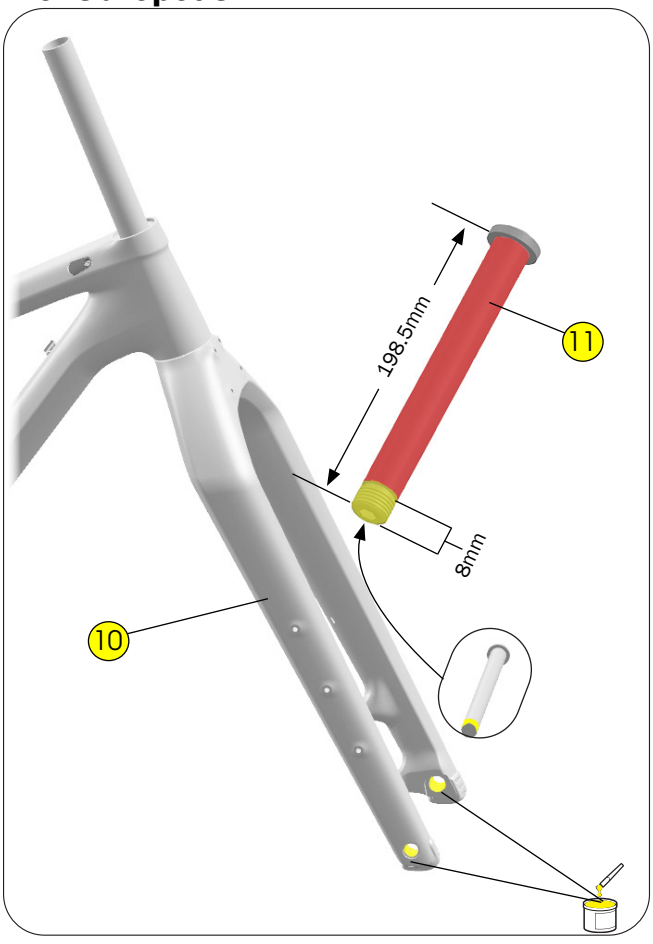

Routing — 1x

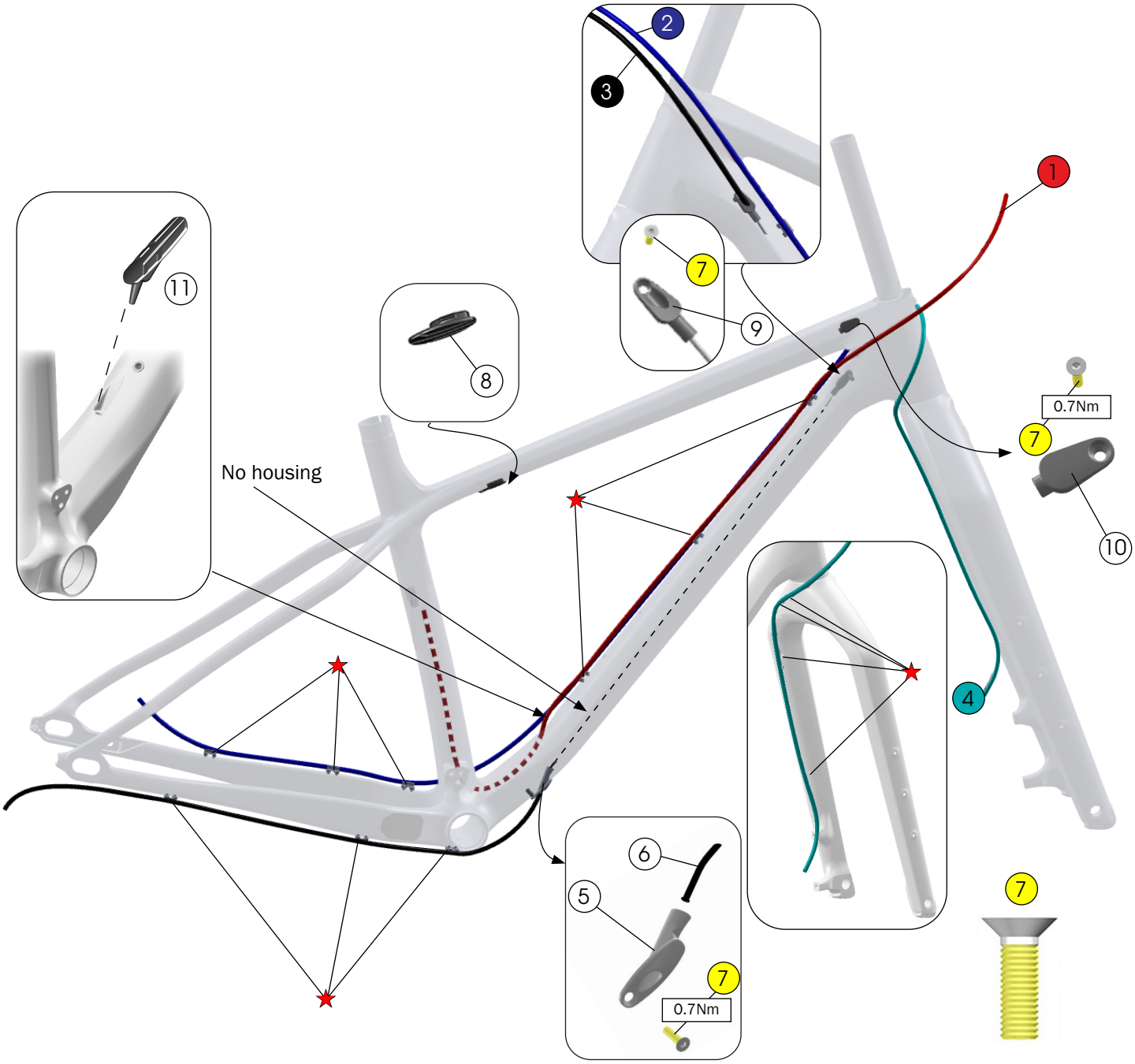

1. Dropper post housing
2. Rear brake hose
3. Rear derailleur housing
4. Front brake hose
- ★ Zip ties
5. Cable exit guide
6. Guide tube — W333080

— W439610

7. Fasteners, M3 x 12mm — W318529
   Note: Apply anti-sieze or waterproof grease.
8. Frame plug — W329840
9. Cable entry guide — W315463
10. Cable stop frame plug — W318628
11. Dropper post carbon frame plug
    (For use with a rigid seat post) — W321530

Routing — Optional 2x

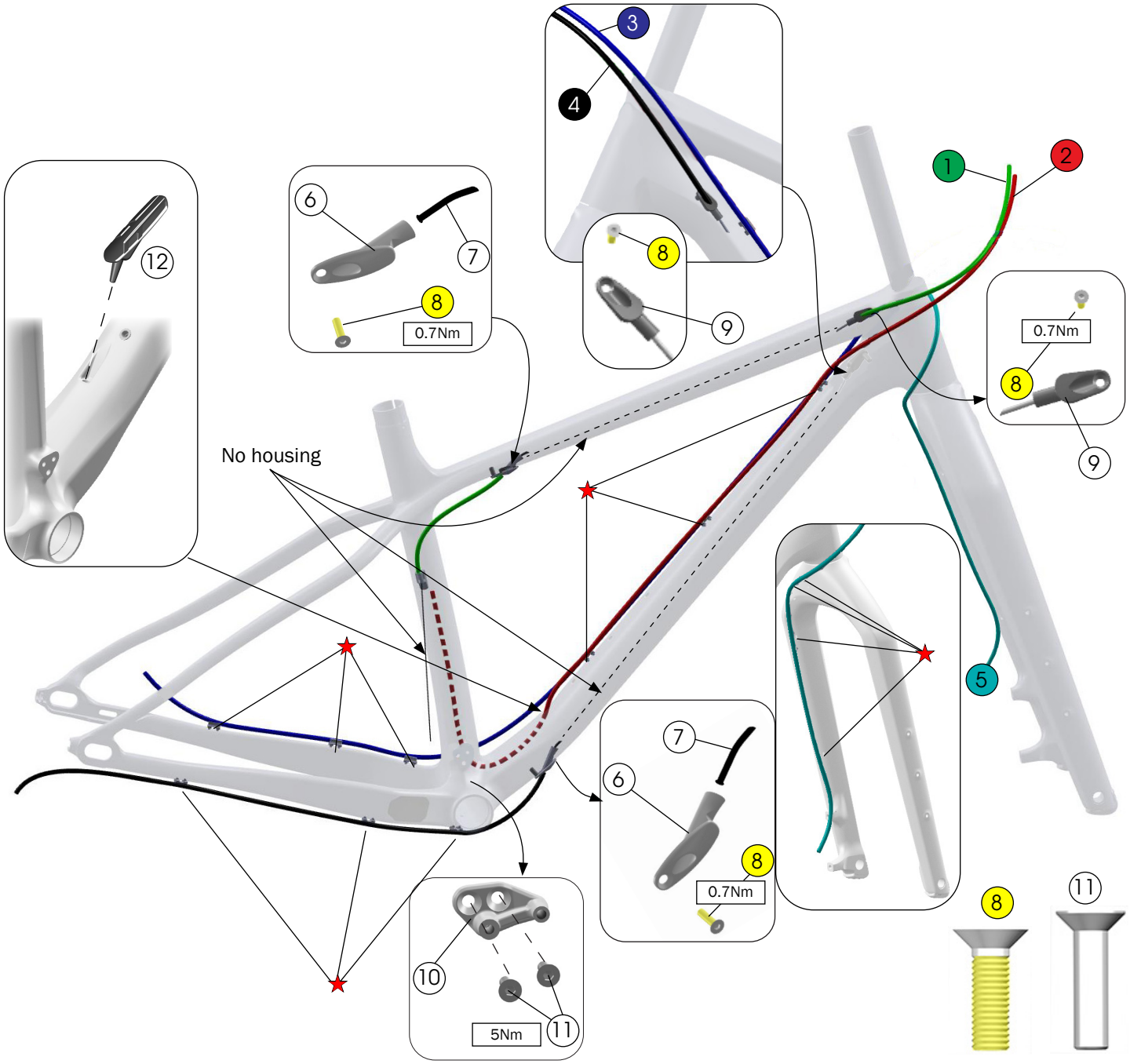

1. Front derailleur housing
2. Dropper post housing
3. Rear brake hose
4. Rear derailleur housing
5. Front brake hose
- Zip ties

6. Cable exit guides
7. Guide tubes — W333080

— W439610

8. Fasteners, M3 x 12mm — W318529

Note: Apply anti-sieze or waterproof grease.

9. Cable entry guides — W315463
10. Low, direct-mount front derailleur bracket — W516589
11. Bolts, M5 x 16 — W522730
12. Dropper post carbon frame plug (For use with a rigid seat post) — W321530

Frame guards



1. Low, direct-mount front derailleur plate cover — W516639
2. Down tube adhesive guard — W519509
   Use isopropyl alcohol to clean the frame surface where the guard attaches. Wait for the alcohol to dry before applying the guard.

   Notice: Do not clean the entire frame with isopropyl alcohol. Isopropyl alcohol could damage the paint.
3. Fork dropout bumper, driveside
4. Fork dropout bumper, non-driveside
5. Bolts, M4 x 12mm

— 5312674

Fork and frame mounts

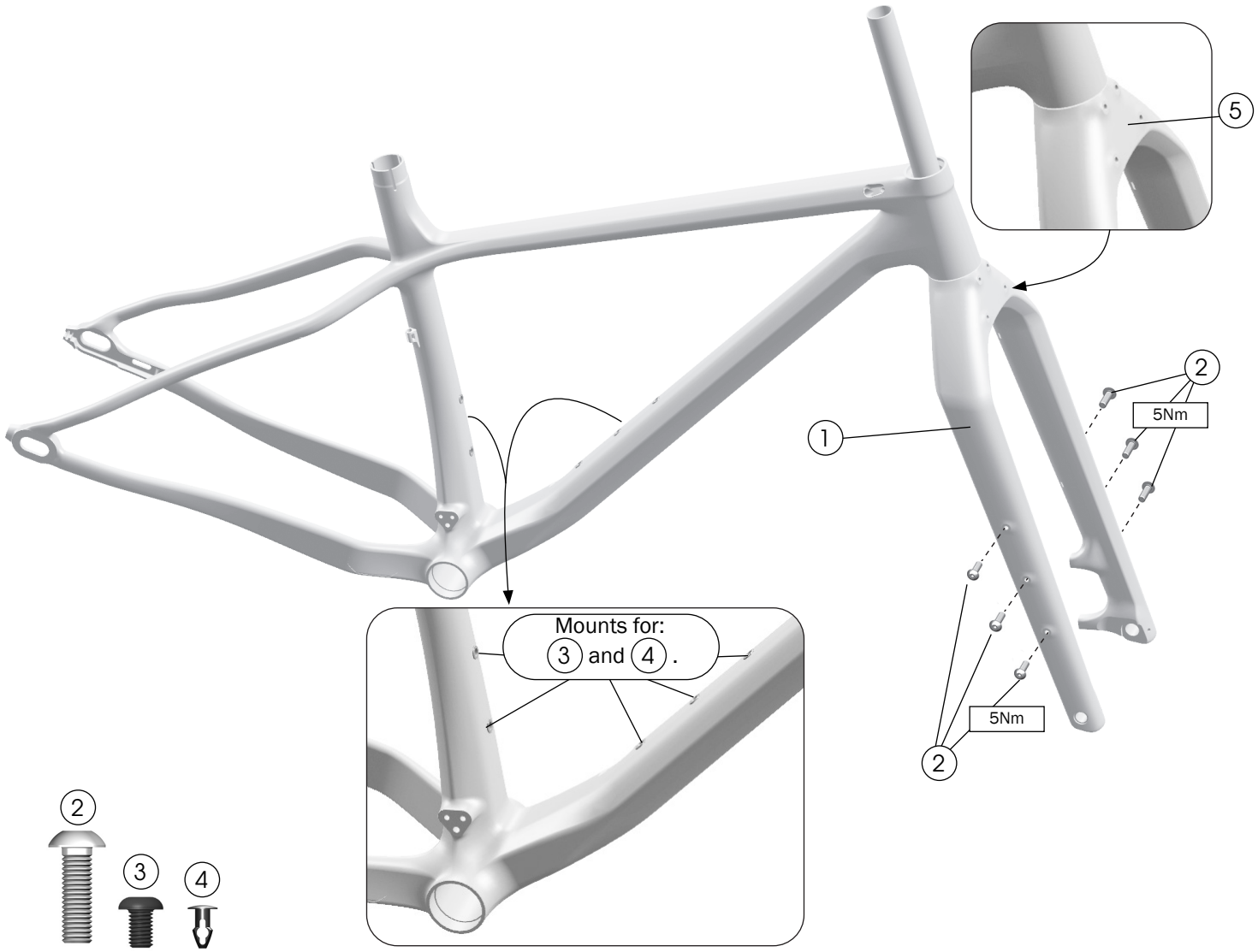

1. Carbon fork — 5311796
2. Screws, stainless steel, M5 x 16mm — W5252789
3. Water bottle bolts, stainless steel, M5 x 8mm — W598484
4. Water bottle nutsert plugs — W308963
5. Mounts for M6 x 16mm bolts. See Front rack on page 7.

Front rack (available separately)

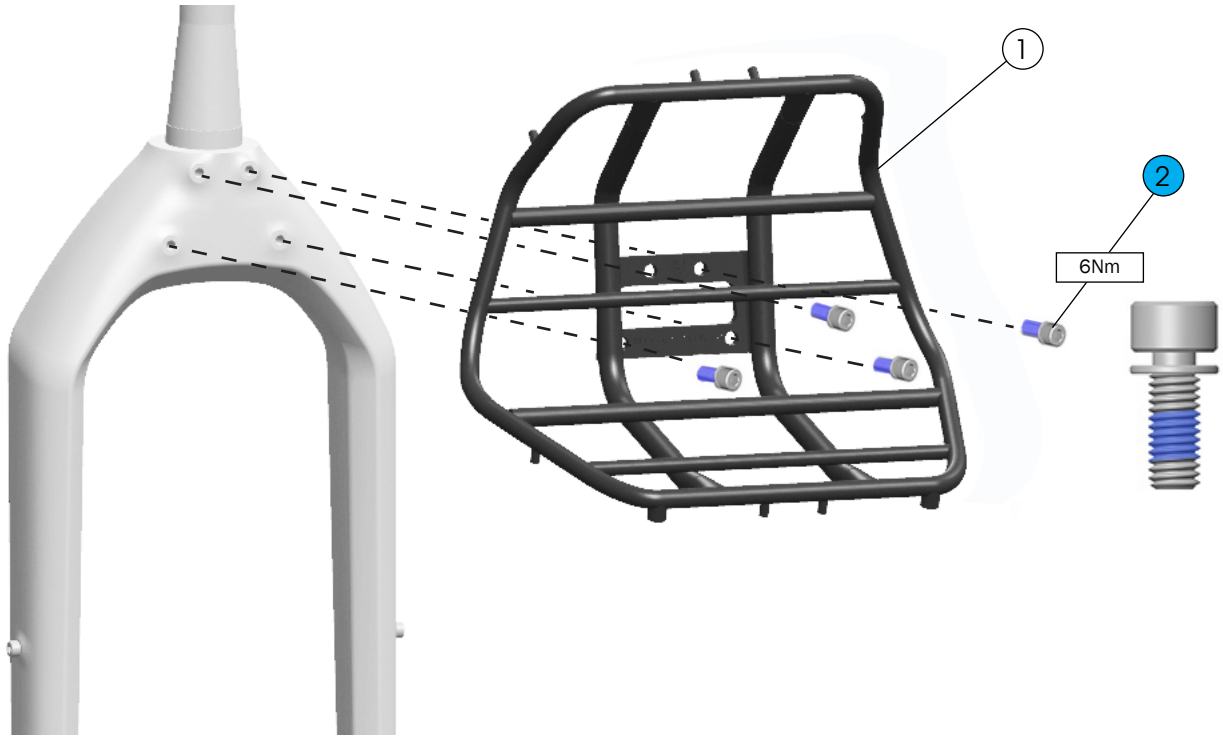

1 Farley front rack — 44354
Search trekbikes.com to find the color-matched part for your bike.

2 Bolts, M6 x 16mm, with washers — W582658

Specifications

Chainline

1x 70.7mm

Chainring

1x 32T

2x **Small ring:** 22T

Large ring: 36T

Front derailleur (2x)

Requires a Low Direct Mount front derailleur

Rear brake mount

Minimum: 160mm

Maximum: 180mm

Maximum tire size

26" wheels: 4.7"

27.5" wheels: 4.5"

Notice: Measurements of actual tires may vary. Always verify there is sufficient clearance between the tire and the frame. Improper tire size could damage the bicycle frame. Trek recommends 6mm clearance above and on both sides of the tire.

Bottom bracket

Press fit PF121

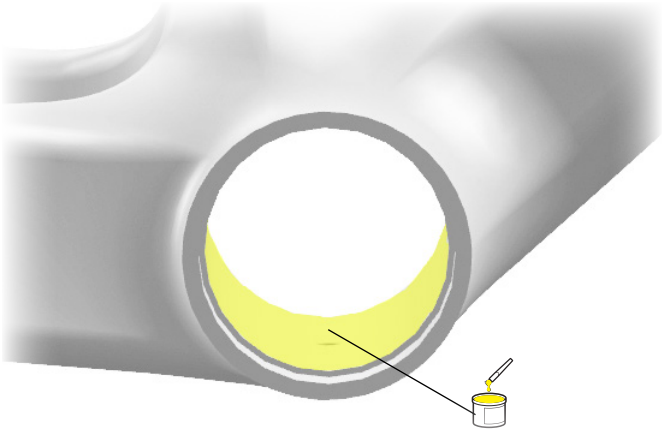

Seat post

WARNING

Always follow the seatpost manufacturer's minimum insertion recommendation. Failure to follow the recommendation could cause damage to the seatpost and result in injury to the rider.

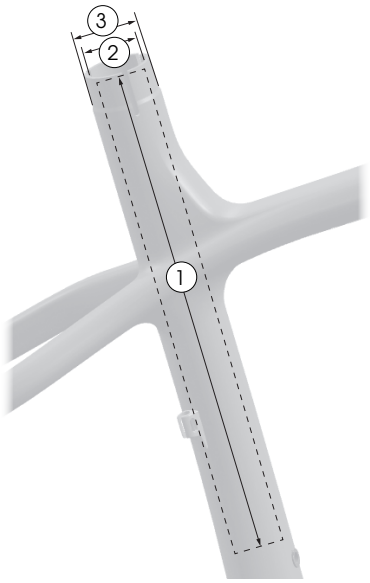

1	Maximum insertion	S	175mm
		M, L, XL	200mm
2	Seat tube inside diameter		31.6mm
3	Seat tube post clamp outer diameter		36.4mm

Fork

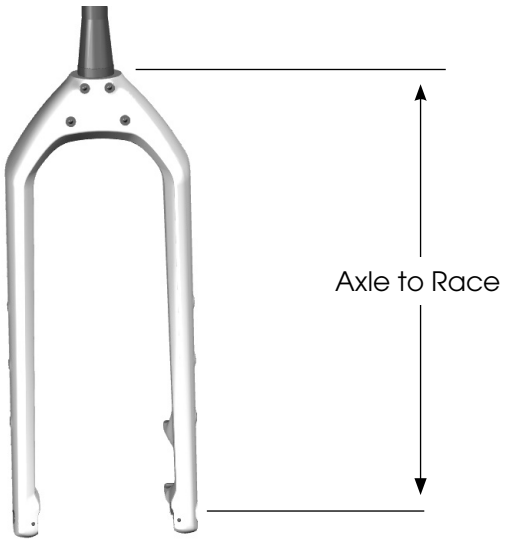

Frame size	Axle to Race (mm)	
S, M, L,	Recommended	490
XL	Recommended	491