OWNER'S MANUAL

ELECTRIC BICYCLE

EN

epowered by

BOSCH

The Smart System (28 mph)

TREK

Electra

IT IS IMPORTANT TO READ THE WARNINGS AND INSTRUCTIONS IN THIS MANUAL BEFORE RIDING YOUR NEW BICYCLE.

WELCOME

Welcome to our bike family
Thank you for purchasing your new bike.

We believe in bikes. We make high quality bikes that are built to last.
That is why each bike we make comes with a limited lifetime warranty.
We wish you many carefree and enjoyable cycling kilometers with your new bike!

However, if you experience any problems with your bike, do not hesitate to contact your local retailer.
If the problem persists, please call our customer service for a solution.

www.trekbikes.com
www.electrabike.com

CONTENTS

Welcome 3

Important to read before the first ride 5

The Bosch drive system (28 mph) 9

Intuvia 100 controller 23

Kiox 300 controller 41

LED Remote 57

System Controller | Mini Remote 77

Display mount 97

Smartphone Grip 109

Connect Module 125

Drive unit (Performance Line | Performance Line Sport) 135

Drive unit (Performance Line: CX | Cargo | CX Race Edition | Speed) 149

Battery (PowerTube | PowerPack) 163

Charger 187

Contact 203

IMPORTANT TO READ BEFORE THE FIRST RIDE

US Customer: Supplemental Product Information

The most important points for you to do

1. Even if you have ridden a bicycle for years, it is important for every person to read the general "Bicycle Owner's manual" and the specific "Electric Bicycle Owner's manual" carefully before you ride on the new electric bicycle.

- Both manuals contains detailed information and useful suggestions about your new bicycle.
- Make sure that you understand the proper use, maintenance, and disposal of the components of the electrical system of your new electric bicycle.

2. Think about safety. Your safety and that of other road users is very important.

- Do not ride the electric bicycle without the battery. The battery must be on the bicycle while riding, else the bicycle has no lights when needed.
- Check your bicycle for normal operation, loose parts and defects before riding. If you find any problem, visit your bicycle dealer for repairs before riding.
- Be aware that other road users (cars, trucks, motorcycles) do not expect that an electric bicycle can ride faster than a normal bicycle. Riding faster also increases the risk of accidents.
  Distances will close much faster, and braking distances will become longer.
- Do not ride abusively. Only ride in the use conditions specified for your bicycle:
  - Electric City/Trekking bicycles are approved for Condition 1 (paved roads with tires staying on the ground).
  - Electric Mountain bicycles are approved for Condition 3 (rougher surfaces, jumps of not more than 24 in (61 cm)).

  Please refer to the general Bicycle Owner's manual for more detailed information.
- Do not overload the rear rack. The maximum allowable weight for the rear rack on electric bicycles is 44 lb (20 kg) for bicycles with a rear rack battery and 55 lb (25 kg) for bicycles with a down tube battery. On bicycles with a luggage rack at both sides of the rear fender only, without a top deck, the maximum allowed load on the rack is 33 lb (15 kg) in total.

3. The electric system of your new bicycle needs special attention.

- Do not clean your electric bicycle with a high pressure washer. Any electrical system is sensitive to moisture. High pressure water might enter connectors or other parts of the electric system.
- Handle your battery with care. Do not drop or impact the battery. Mishandling of the battery could lead to severe damage or over-heating. In an extremely rare case, a battery that has been severely impacted or otherwise mishandled could potentially catch fire.
  If you suspect damage to your battery, visit your dealer immediately for inspection.

4. Maintain the battery as instructed in this Bicycle Owner's manual.

Failure to follow these instructions may result in damage to your battery and may require battery replacement:

- Only charge the battery with the included Bosch charger.
- When not using the battery for a longer period, charge it to approximately 60% (three to four LEDs lit on the charge-control indicator). Check the charge condition after six months. When only one LED of the charge-control indicator lights up, recharge the battery again to approximately 60%.
- Once charging the battery is complete, unplug the battery from the charger and unplug the charger from the wall socket.
- A Li-Ion battery will self-discharge over time. If the battery is left uncharged, then stored without charging, it may discharge to such a low state that the battery can no longer be charged and must be replaced.
- Store the battery in a dry, well-ventilated location. Protect the battery against moisture and water.
- Under unfavorable weather conditions, it is recommended e.g. to remove the battery from the bicycle and store it in a protected location.
- The battery can be stored at temperatures between 14°F (-10°C) and 140°F (+60°C). For a long battery life, however, it is best to store the battery at room temperature of approximately 68°F (20°C) is of advantage.
- If the bicycle is not ridden for an extended time, do not store the battery on the bicycle.

5. Be careful when transporting an electric bicycle.

- An electric bicycle is heavier than a normal bicycle. If transporting on a vehicle, be aware of the maximum load capacity of the vehicle's roof, towing hook and/or the bicycle carrier. Refer to the manuals of the vehicle and bicycle carrier for details.
- Remove the controller (if removable), and battery and, if present, panniers from the bicycle and store them elsewhere in the vehicle during the drive.
- Always respect local laws about transportation of an electric bicycle.
- Because Li-Ion batteries of this size and power are considered 'Dangerous goods, class 9' when transporting, regulations may restrict the transport of separate Li-Ion batteries in some places. The restrictions apply to most airlines and some trucking companies. If you intend to ship or travel with your electric bicycle (with installed battery), check with the airline or carrier and local regulations about traveling with a Li-Ion battery.

6. Obey local regulations.

In most countries the regulations for the use of an electric bicycle are the same as those for a standard bicycle. However, there may be local differences such as where you can ride, minimum rider age, or required equipment and registration. It is the rider's responsibility to know the local regulations that apply to an electric bicycle and to obey them.

7. Mounting accessories on an e-bike.

An electric bike has hidden wiring through frame and has other critical e-bike parts like the drive unit and battery pack. When mounting accessories (e.g. a bottle cage), be sure not to impact the wiring or battery pack, e.g. by using too long or pointed bolts. This might cause a short circuit to the electric system and/or damage to the battery.

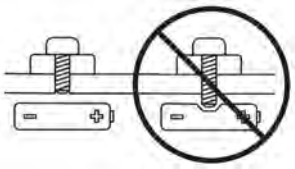

⚠ Warning. A short circuit in the electric system and/or damage to the battery might lead to over-heating. In an extremely rare case, a battery pack that has been severely impacted could potentially catch fire.

8. Visit your dealer on a regular basis for maintenance of your new bicycle.

- Your dealer has the right knowledge and equipment to maintain your e-bike and to mount accessories safely.
- If you have questions about your new electric bicycle, ask your dealer!

Limited warranty

Your bicycle is covered by a Lifetime Limited Warranty. Please visit our web site for details.

Additional information for 'Fast electric bicycles'

The 'Fast Electric Bicycle' is an electric bicycle that provides additional assistance at speeds up to 28 mph so long as the rider keeps pedaling. This is higher than the assisted speed provided by a standard electric bicycle (20 miles per hour).

Note.
The maximum speed depends on how hard you pedal, and whether you are descending on a decline.

Local Regulations
The regulations that cover use of a Fast Electric Bicycle vary by country, state, and even municipality in certain locations. You must comply with the local regulations that concern the minimum age of the rider, driver license, insurance, license plate, traffic and maximum speed regulations, and any other regulations.
The regulations may change at any time. It is the rider's responsibility to obey the regulations that apply to a Fast Electric Bicycle.

Note.
Wearing a helmet might not be mandatory in your location, but for your own safety, we strongly recommends wearing a helmet.

How long does a charge last?
The maximum range on one battery charge depends on your style of use and the environment where the Fast Electric Bicycle is used. The faster you go under motor power, the shorter the range.

How fast can I go?
Your Fast Electric Bicycle is still a bicycle. This bicycle does not have a throttle. Unless you have the "Walk-Assist" mode, you must be pedaling to use the power of the assist system.

Other road users may not expect a bicycle to be ridden at the speed of a Fast Electric Bicycle.
In traffic and crowded areas, ride at a safe speed.
Obey all traffic regulations as defined by the regulations for your area.

Owner's Manual – The Bosch Drive System
Drive Unit | On-board computer | Display Mount | Remote Control | ConnectModule | Battery | Charger (28 mph)

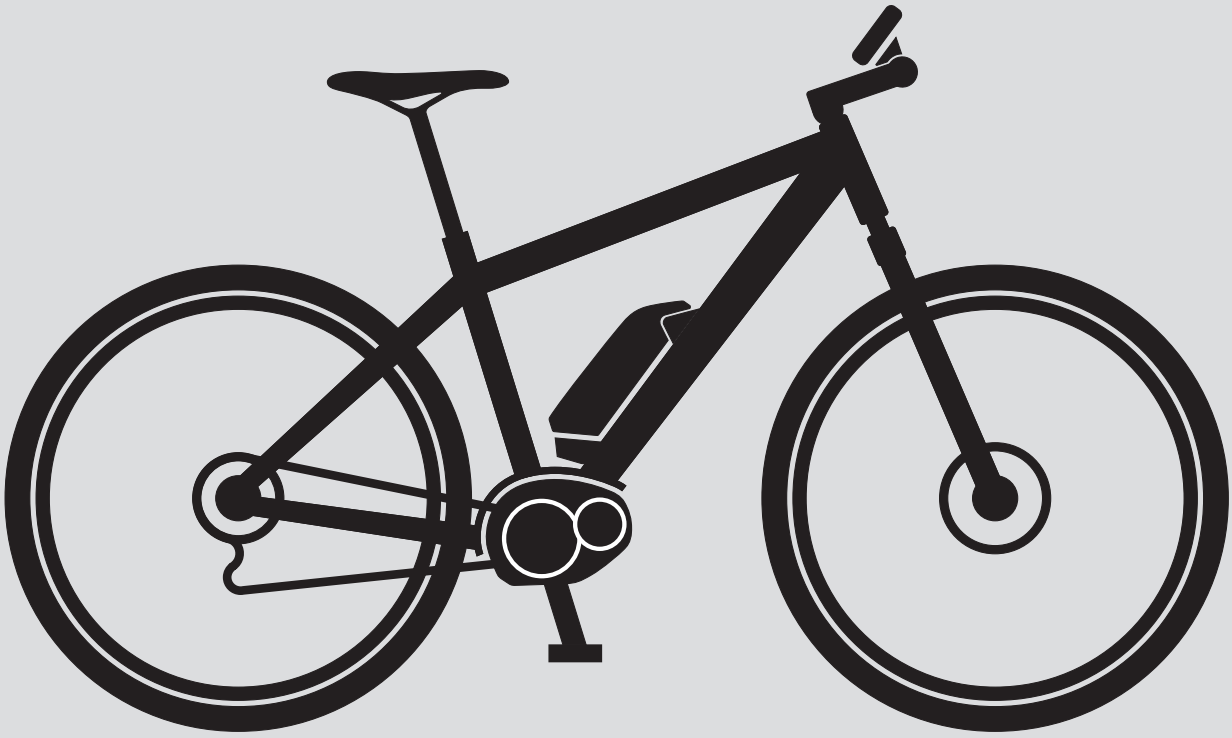

en Original operating instructions

This manual contains important safety, performance and service information. Read and understand it along with the information provided to you by your bicycle manufacturer before using the product, and keep it for reference.

Age: 18+

Drive Unit
BDU338Y
BDU378Y

On-board Computer
BHU3200
BHU3600 (Only allowed in USA)

SmartphoneGrip
BSP3200

ConnectModule
BCM3100

Display Mount
BDS3210
BDS3250
BDS3620
BDS3630

Remote Control
BRC3100
BRC33YY
BRC3600

Battery
BBP354Y
BBP355Y
BBP356Y
BBP358Y
BBP375Y
BBP376Y
BBP377Y

Charger
BPC3200 (NZ)
BPC3210 (USA)
BPC3400 (NZ)
BPC3410 (USA)

Display Cable
BCH3611

Table of contents

Introduction 2
About Warnings 2
General Warnings 2
Using Your Operator's Manual 3
Bosch Drive System Overview 4
Bicycle View (PowerTube) 4
Bicycle View (PowerPack) 5
Operating your Bosch Drive System 6
Getting Ready to Ride 6
Safe Start-up Procedure 7
Notes on cycling with the eBike system 8
Transport 9
Maintenance/Cleaning 9
Battery Recycling Program 11

Introduction

Thank You for Purchasing a Bosch Drive System Equipped Bicycle!

Your Bosch eBike Systems team appreciates having you as a customer and wishes you many years of safe and satisfied use of your bicycle.

About Warnings

This manual contains many **DANGER**, **WARNING**, and **CAUTION** indicators concerning the consequences of failure to use, assemble, maintain, store, inspect and dispose of a Bosch-equipped eBike in a safe manner.

– The combination of the safety alert symbol and the word **DANGER** indicates a hazardous situation that, if not avoided, will result in death or serious injury.
– The combination of the safety alert symbol and the word **WARNING** indicates a hazardous situation that, if not avoided, could result in death or serious injury.
– The combination of the safety alert symbol and the word **CAUTION** indicates a hazardous situation that, if not avoided, could result in minor or moderate injury.

General Warnings



Read all safety warnings and all instructions. Failure to follow the warnings and instructions may result in death or serious injury.

Save all safety warnings and instructions for future reference.

The term **battery pack** used in these operating instructions refers to all original Bosch eBike battery packs.

▶ **Riders must be aware of and follow all applicable rules and regulations related to the operation or use of e-bikes in their local jurisdiction when operating or otherwise using this product.** Riders must have the physical coordination, reaction and mental capabilities to control a bike and manage traffic, road conditions, and sudden situations and also respect the laws and instructions governing bicycle use.

⚠ WARNING

▶ **This manual contains important safety, performance and service information.** Read it before you take the first ride on your new bicycle, and keep it for reference. The manual can also be found online at www.bosch-ebike.com.

▶ **This manual is intended to be read together with the separate user manual provided with your bicycle.** Be sure to read all provided documents including labels on the product before your first ride.

▶ **Read ALL accompanying manuals before riding the bike for the first time.** Your Bosch Drive System comes with additional manuals and documents provided by the manufacturer of the bicycle and other components. Failure to read and understand safety information can result in death or serious injury.

▶ **Take responsibility for your own SAFETY.** If you have any questions or do not understand something, consult with your dealer or the bicycle or component manufacturer.

▶ **Some eBike accessories may present a choking hazard to small children.** Keep these accessories away from children.

⚠ CAUTION

▶ **The Bosch Drive System adds weight to your bicycle which you may not be used to lift.** Avoid injury, use proper lifting techniques.

Using Your Operator's Manual

Your operator's manual consists of several parts:
- Operating instructions for the Bosch eBike system (this manual)
- Operating instructions for the drive unit
- Operating instructions for the display, the on-board computer or a smartphone holder
- Operating instructions for the display holder, on-board computer holder or smartphone holder
- Operating instructions for the control unit
- Operating instructions for the charger
- Operating instructions for the battery
- Operating instructions for the ConnectModule

▶ **Read and observe the safety warnings and instructions in all operating instructions of the eBike system and your eBike.**

Graphics

The bicycle shown in this manual may differ slightly from your bicycle, but will be similar enough to help you understand our instructions.

RIGHT-HAND and LEFT-HAND sides are determined by facing in the direction the bicycle will travel when going forward. When you see a broken line (------), the item referred to is hidden from view.

Bosch Drive System Overview

Bicycle View (PowerTube)

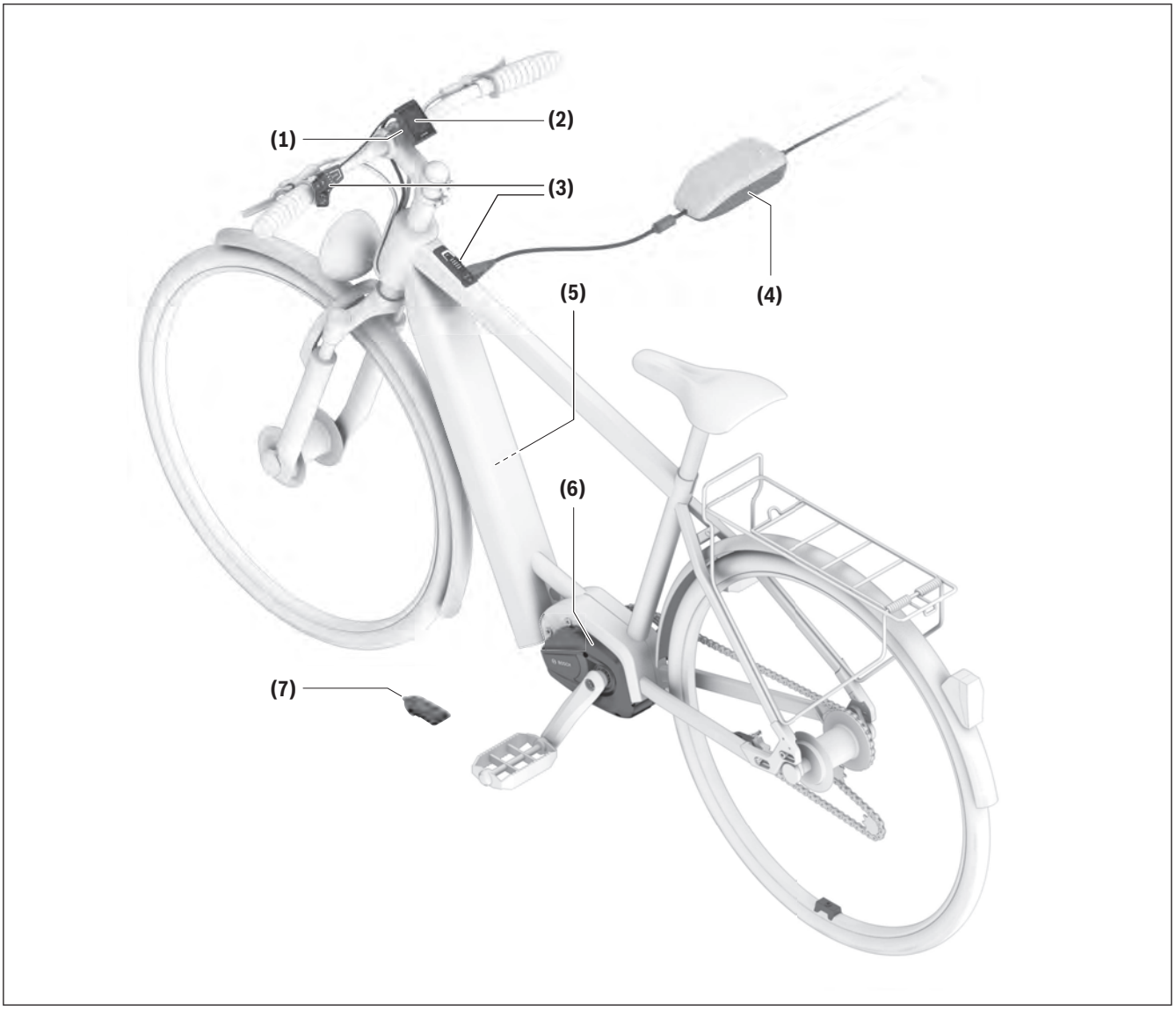

Bosch Drive System Components

All representations of bike components are schematic and can deviate from your eBike.

(1) Display holder

(2) Display/On-board computer/Smartphone holder

(3) Control unit

(4) Charger

(5) Frame-mounted battery "PowerTube"

(6) Drive unit

(7) ConnectModule

Bicycle View (PowerPack)



Bosch Drive System Components

All representations of bike components are schematic and can deviate from your eBike.

(1) Display holder

(2) Display/On-board computer/Smartphone holder

(3) Control unit

(4) Charger

(5) Frame-mounted battery "PowerPack"

(6) Drive unit

(7) ConnectModule

Operating your Bosch Drive System

Getting Ready to Ride

Read and understand all safety warnings and instructions. Failure to follow the below warnings could result in death or serious injury.

- ▶ **Protect others from death or serious injury. Prevent unauthorized use.** Always remove battery from the bicycle when not in use and store in a secure location. Failure to secure your bicycle from unauthorized use can result in death or serious injury to others.
- ▶ **Read and understand the influences on the operating range when planning your ride** (see "Influences on range", page English – 8).

Before your first ride

Check your bicycle owner's manual for important information about the bike components, such as the brakes, pedals, gears, gear shifting, etc.

⚠ WARNING

- ▶ **If you have an impairment or disability such as a visual impairment, hearing impairment, physical impairment, cognitive/language impairment, or a seizure disorder, consult your physician before using this product.**
- ▶ **To reduce the risk of serious injury related to exercise, take the following precautions before use: Do not overexert yourself.** Use of the Bosch Drive System requires varying amounts of physical activity.

Consult a doctor before using the device if you have any medical condition or issue that affects your ability to safely perform physical activities, or if you:

- – are or may be pregnant
- – have heart, respiratory, back, joint, or other orthopedic conditions
- – have high blood pressure
- – have difficulty with physical exercise
- – have been instructed to restrict physical activity

- ▶ **Wearing a helmet can prevent a severe head injury. Whenever riding, always wear a helmet that meets or exceeds established safety standards.** Approved helmets in the USA must meet the US Consumer Product Safety Commission standard, so look for a CPSC reference.
- ▶ **Riding a Bosch drive system equipped bicycle capable of speeds up to 28 mph requires proficiency in the activity of road cycling.** This product can allow you to achieve speeds greater than you may be used to achieving without the aid of motor assistance. It also may allow for riding longer periods of time at a higher speed. Higher speed results in higher forces if a crash occurs. Control your bicycle at all times. Your risk of death or serious injury increases with both speed and age.

The following are required for safe use of this product:

- – Knowledge of the laws/safety guidelines/rules of road cycling (riding safely)
- – Ability to operate and control a standard road bike
- – Experienced rider who is actively riding
- – Capable, comfortable and confident riding safely at speed up to 28 mph
- – Your bike should match your riding style, be properly adapted to the dimensions of your body, and be well maintained.

- ▶ **Do not use this product under the influence of drugs and/or alcohol.**

⚠ WARNING

- ▶ **While riding, do not become distracted by the onboard computer and always remain alert to all riding conditions.** The on-board computer should only be used in a stationary and safe start-up position. Utilize the operating unit to change motor assistance levels while riding.

- ▶ **Check your bicycle manual for maximum riding weight of your bicycle.** Overloading your bicycle can result in component failure which can result in death or serious injury. Typically maximum riding weight is defined by the sum of the rider's weight plus the weight of any luggage.
- ▶ **In addition to reading and understandings your owner's manuals, be sure you know or refamiliarize yourself with local laws prior to using this product.** Consult your bicycle dealer, local library, bookstore to choose the learning resource best for you.

Intended Use

⚠ WARNING

- ▶ **Understand your bike and its intended use by consulting your bicycle owner's manual.** Using your bike in an unintended manner can result in death or serious injury.
- ▶ **Using the Bosch Drive System for purposes other than what is was designed for could cause death or serious injury.**

Your Bosch drive unit is not intended for towing another bicycle. For trailer towing, consult your bicycle owner's manual and trailer owner's manual for towing instructions and towing compatibility.

Safe Start-up Procedure

⚠ WARNING

- ▶ **Follow the safe start-up procedure below.** Failure to follow safe start-up procedure can result in death or serious injury.

Preparations

Before starting check the following:

- Check that you have unplugged the battery charger.
- Your battery pack is locked in place (Pull on the battery pack to ensure it is locked in place).
- Remove the battery pack key.

Start Riding

- Sit in the saddle with both feet touching the ground and two hands on the handlebars.
- Once you are in a stable position, turn on the Bosch on-board computer. The Bosch Drive System will always start up in **OFF** mode.
- Place both hands on the handlebars and begin pedaling.

Notes on cycling with the eBike system

When does the eBike drive work?

The eBike drive assists your cycling only when you are pedaling. If you do not pedal, the assistance will not work. The motor output always depends on the pedaling force you apply.

If you apply less force, you will receive less assistance than if you apply a lot of force. This applies irrespective of the assistance level.

The eBike drive automatically switches off at speeds over **28 mph**. When the speed falls below **28 mph**, the drive automatically becomes available again.

An exception applies to the push assistance function, in which the eBike can be pushed at low speed without pedaling. The pedals may rotate when the push assistance is in use.

You can also use the eBike as a normal bicycle without assistance at any time, either by switching off the eBike system or by setting the assistance level to **OFF**. The same applies when the battery is drained.

Interaction between the eBike system and gear-shifting

The gear-shifting should be used with an eBike drive in the same way as with a normal bicycle (observe the operating instructions of your eBike on this point).

Irrespective of the type of gear-shifting, it is advisable to briefly stop pedaling when changing gear. This will facilitate the gear change and reduce wear on the powertrain.

By selecting the correct gear, you can increase your speed and range while applying the same amount of force.

Test the range of your eBike in different conditions before planning longer and more demanding trips.

- ▸ **Read and understand the influences on the operating range when planning your ride** (see "Influences on range", page English – 8).

Influences on range

The range is affected by a number of factors, such as:

- Assistance level
- Speed
- Gear shifting behavior
- Tire type and tire pressure
- Age and condition of the battery
- Route profile (gradients) and conditions (road surface)
- Headwind and ambient temperature
- Weight of eBike, rider and luggage

For this reason, it is not possible to predict the range accurately before and during a trip. However, as a general rule:

- With the **same** assistance level on the eBike drive: The less energy you need to exert in order to reach a certain speed (e.g. by changing gears optimally), the less energy the eBike drive will consume and the higher the range per battery charge will be.
- The **higher** the selected assistance level under otherwise constant conditions, the smaller the range will be.

Note: Plan your routes so that you can always reach your destination without motor assistance.

Transport

⚠ WARNING

- ▶ **Always remove the battery pack from the bicycle before transporting the bicycle on a vehicle bike rack.** Failure to remove the battery pack when using a vehicle bike rack can lead to death or serious injury. The battery may detach during transport and cause an accident to following vehicles.
- ▶ **Always use an approved and compatible bicycle rack when transporting your eBike. The Bosch drive system adds weight to the bicycle.** Refer to your bicycle rack manual to be sure your eBike is compatible. Overloading a bike rack can result in death or serious injury.
- ▶ **Use proper lifting techniques as electric bikes are generally heavier than bicycles.**

Ship batteries only when the housing is undamaged. Tape or mask off open contacts and pack up the battery in such a manner that it cannot move around in the packaging. Inform your parcel service that the package contains dangerous goods. Please also observe possibly more detailed national regulations. Always check state and federal regulations before attempting to ship your battery.

- ▶ **If you transport your eBike attached to the outside of your car, e.g. on a bike rack, remove the on-board computer and the eBike battery to avoid damaging them.**

If you have any questions about transporting the batteries, contact an authorized bicycle dealer. You can also order suitable transport packaging from the dealer.

Maintenance/Cleaning

⚠ WARNING

- ▶ **Do not open any of the components. Service should only be carried out at an authorized Bosch eBike dealer.** Failure to follow above warning can cause death or serious injury. Refer to your bicycle manual or component manual for all non-Bosch drive system components.
- ▶ **Always remove the battery pack before performing any bicycle inspection, maintenance or repair.** Failure to remove the battery pack before performing bicycle inspection, maintenance or repair can lead to serious injury.
- ▶ **If you suspect that something is loose, do not ride your bike.** See your Bosch eBike dealer, only a qualified service provider should perform work on your Bosch Drive System. All nuts, bolts, screws require the correct tightening force. Too little force and the fastener may not hold securely. Too much force and the fastener can strip threads, stretch, deform or break. Either way, incorrect tightening force can result in component failure, which can cause you to lose control and fall.
- ▶ **If replacing your battery, buy only a genuine Bosch battery pack from an approved source. See your Bosch eBike dealer for original Bosch parts.**
- ▶ **Always switch the battery pack off, when inserting or removing it from the holder.** Never attempt to insert or remove the battery pack while riding the bike.
- ▶ **Do not charge or use your eBike in any area with a potentially explosive atmosphere, such as at a fueling area, or in areas where the air contains chemicals or particles (such as grain, dust, or metal powders).** Obey all signs and instructions.
- ▶ **Do not submerge your eBike components in water, or wash with pressurized hose.** Your Bosch drive unit is designed to be water tight to rain water or non-pressure hose washing.
- ▶ **Note down the manufacturer and the number of the key.** In case of loss of the keys, please refer to an authorised Bosch eBike dealer. Please provide

the name of the manufacturer and the number of the key.

- ▶ **Do not paint any components of the Bosch drive system as they may cause premature failure of the component.**

Taking care of your eBike

Please observe the operating and storage temperatures of the eBike components. Protect the drive unit, on-board computer and battery against extreme temperatures (e.g. from intense sunlight without adequate ventilation). Extreme temperatures can cause the components (especially the battery) to become damaged.

Have your eBike system checked by an expert at least once a year (including mechanical parts, up-to-dateness of system software).

Please have your eBike serviced and repaired by an authorized bicycle dealer.

After-sales service and advice on using products

If you have any questions about the eBike system and its components, contact an authorized bicycle dealer.

For contact details of authorized bike dealerships, please visit www.bosch-ebike.com.

Please contact an authorized bicycle dealer if the battery is no longer working.

Cleaning

- ▶ **Do not submerge your eBike components in water, or wash with pressurized hose.** Your Bosch drive unit is designed to be water tight to rain water or non-pressure hose washing.

Keep all components of your eBike clean, especially the battery-pack contacts and corresponding holder contacts. All components including the drive unit may not be immersed in water or cleaned with a high-pressure cleaner. Clean them carefully with a soft, damp cloth (using only mild soap and water).

Battery Recycling Program

The drive unit, on-board computer incl. operating unit, battery, speed sensor, accessories and packaging should be disposed of in an environmentally correct manner.

Do not dispose of eBikes and their components with household waste.

You may recycle your Bosch battery pack by calling 1.800.822.8837.

Robert Bosch GmbH
72757 Reutlingen
Germany

www.bosch-ebike.com

0 275 U07 3SS (2022.03) T / 38

Owner’s Manual – The Bosch Drive System
Intuvia 100

BHU3200



en Original operating instructions

This manual contains important safety, performance and service information. Read and understand it along with the information provided to you by your bicycle manufacturer before using the product, and keep it for reference.

Table of Contents

Introduction 2
About Warnings 2
General Warnings 2
Using your Manual 3
Operating your Bosch On-board Computer 4
Safety instructions 4
Product Description and Specifications 7
Assembly 9
Operation 10
Displays and settings of the on-board computer 12
Maintenance and Service 14
Maintenance and cleaning 14
After-sales service and advice on using products 14
Transport 14
Battery Recycling Program 14

Introduction

About Warnings

This manual contains many **DANGER**, **WARNING**, and **CAUTION** indicators concerning the consequences of failure to use, assemble, maintain, store, inspect and dispose of a Bosch-equipped eBike in a safe manner.

– The combination of the safety alert symbol and the word **DANGER** indicates a hazardous situation that, if not avoided, will result in death or serious injury.
– The combination of the safety alert symbol and the word **WARNING** indicates a hazardous situation that, if not avoided, could result in death or serious injury.
– The combination of the safety alert symbol and the word **CAUTION** indicates a hazardous situation that, if not avoided, could result in minor or moderate injury.

General Warnings



Read all safety warnings and all instructions. Failure to follow the warnings and instructions may result in death or serious injury.

Save all safety warnings and instructions for future reference.

The term **battery pack** used in these operating instructions refers to all original Bosch eBike battery packs.

▶ **Read ALL accompanying manuals before riding the bike for the first time.** Your Bosch Drive System comes with additional manuals and documents provided by the manufacturer of the bicycle and other components. Failure to read and understand safety information can result in death or serious injury.

⚠ WARNING

▶ **This manual contains important safety, performance and service information.** Read it before you take the first ride on your new bicycle, and keep it for reference. The manual can also be found online at www.bosch-ebike.com.

▶ **This manual is intended to be read together with the separate user manual provided with your bicycle.** Be sure to read all provided documents including labels on the product before your first ride.

▶ **Take responsibility for your own SAFETY.** If you have any questions or do not understand something, consult with your dealer or the bicycle or component manufacturer.

▶ **Some eBike accessories may present a choking hazard to small children.** Keep these accessories away from children.

⚠ CAUTION

▶ **The Bosch Drive System adds weight to your bicycle which you may not be used to lift.** Avoid injury, use proper lifting techniques.

Using your Manual

In addition to the functions outlined here, changes to software relating to troubleshooting and functional modifications may be introduced at any time.

Graphics

The bicycle shown in this manual may differ slightly from your bicycle, but will be similar enough to help you understand our instructions.

RIGHT-HAND and LEFT-HAND sides are determined by facing in the direction the bicycle will travel when going forward. When you see a broken line (------), the item referred to is hidden from view.

Operating your Bosch On-board Computer

Safety instructions



Read all the safety information and instructions. Failure to observe the safety information and follow instructions may result in electric shock, fire and/or serious injury.

Save all safety warnings and instructions for future reference.

The term **battery pack** used in these operating instructions refers to all original Bosch eBike battery packs.

- ▶ **Read and observe the safety warnings and instructions in all operating instructions of the eBike system and your eBike.**
- ▶ **Do not attempt to fix display or remote control while riding!**
- ▶ **Do not allow yourself to be distracted by the display of the on-board computer.** If you do not concentrate exclusively on the traffic around you, you risk being involved in an accident. If you want to change any settings on the on-board computer other than the assistance level, always stop before entering the relevant data.
- ▶ **Do not operate your smartphone during the journey.** If you do not concentrate exclusively on the traffic around you, you risk being involved in an accident. When using your smartphone, only enter the relevant data once you've stopped.
- ▶ **Set the display brightness such that you can adequately see important information like speed or warning symbols.** An incorrectly set display brightness can result in dangerous situations.
- ▶ **Do not open the on-board computer.** Opening the on-board computer can result in irreparable damage and void your warranty.
- ▶ **Do not use the on-board computer as a handle.** Lifting the eBike up by the on-board computer can cause irreparable damage to the on-board computer.
- ▶ **Do not stand your bicycle upside down on its saddle and handlebars if the on-board computer or its holder protrude from the handlebars.** This may irreparably damage the on-board computer or the holder. Also remove the on-board computer before placing the bicycle on a wall mount to ensure that the on-board computer does not fall off or become damaged.
- ▶ **Caution!** Using the on-board computer with *Bluetooth*® and/or WiFi can interfere with the operation of other devices and systems, including airplanes and medical devices (e.g. pacemakers, hearing aids). Similarly, the possibility that this may cause damage to humans and animals in the immediate vicinity cannot be completely excluded. Do not use the on-board computer with *Bluetooth*® in the vicinity of medical devices, service stations, chemical plants, blasting areas or other areas where there is a risk of explosion. Do not use the on-board computer with *Bluetooth*® in airplanes. Avoid using the device in close proximity to your body over an extended period of time.
- ▶ The *Bluetooth*® word mark and logos are registered trademarks owned by Bluetooth SIG, Inc. and any use of such marks by Bosch eBike Systems is under licence.
- ▶ **The on-board computer is fitted with a radio interface. Local operating restrictions, e.g. in airplanes or hospitals, must be adhered to.**
- ▶ **Do not enter information or make selections while riding.** Interacting with the display unit while riding can lead to accidents causing serious injury or death. You must observe road and traffic conditions, and comply with traffic laws at all times.
- ▶ **Accessing other apps, reading pop up messages/other content, or otherwise using your**

mobile device while operating an eBike may be distracting. Distracted driving is a serious safety concern and can lead to accidents causing serious injury or death. In order to prevent distracted driving, most mobile devices come equipped with a "Do Not Disturb" mode. The "Do Not Disturb" mode should be used while operating an eBike. Please consult your device-specific instructions for more information. You, as the eBike operator, are fully responsible for ensuring that you pay attention to road conditions and comply with traffic laws at all times.

- ▶ **Do not activate push assistance function while riding on the bike.** Only use push assitance function when pushing the eBike.
- ▶ Please note that certain State or local laws may require that class III eBikes must be equipped with a functioning speedometer that displays speed in miles per hour. Riders must be aware of any and all applicable rules and regulations related to the operation or use of class III eBikes in any applicable jurisdictions before operating or otherwise using this product.

Safety instructions for button/coin cells

- ▶ **WARNING! Ensure that the button/coin cell is kept out of the reach of children.** Button/coin cells are dangerous.
- ▶ **Button/coin cells must never be swallowed or inserted into any other part of the body. If you suspect that someone has swallowed a button/coin cell or that a button/coin cell has entered the body in another way, seek medical attention immediately.** Swallowing button/coin cells can result in severe internal burns and death within two hours.
- ▶ **Ensure that button/coin cell replacement is carried out properly.** There is a risk of explosion.
- ▶ **Only use the button/coin cells listed in this operating manual.** Do not use any other button/coin cells or other forms of electrical power supply.
- ▶ **Do not attempt to recharge the button/coin cell and do not short circuit the button/coin cell.** The button/coin cell may leak, explode, catch fire and cause personal injury.
- ▶ **Remove and dispose of drained button/coin cells correctly.** Drained button/coin cells may leak and cause personal injury or damage the product.
- ▶ **Do not overheat the button/coin cell or throw it into fire.** The button/coin cell may leak, explode, catch fire and cause personal injury.
- ▶ **Do not damage the button/coin cell and or take the button/coin cell apart.** The button/coin cell may leak, explode, catch fire and cause personal injury.
- ▶ **Do not allow damaged button/coin cells to come into contact with water.** Leaking lithium may mix with water to create hydrogen, which could cause a fire, an explosion, or personal injury.

NOTICE: This device complies with part 15 of the FCC Rules. Operation is subject to the following two conditions:

1. This device must not cause harmful interference, and
2. this device must accept any interference received, including interference that may cause undesired operation.

NOTICE: Changes or modifications made to this equipment not expressly approved by the Robert Bosch GmbH may void the FCC authorization to operate this equipment.

NOTE: This equipment has been tested and found to comply with the limits for a Class B digital device, pursuant to Part 15 of the FCC Rules. These limits are designed to provide reasonable protection against harmful interference in a residential installation. This equipment generates, uses and can radiate radio frequency energy and, if not installed and used in accordance with the instructions, may cause harmful interference to radio communications. However, there is no guarantee that interference will not occur in a particular installation. If this equipment does cause

harmful interference to radio or television reception, which can be determined by turning the equipment off and on, the user is encouraged to try to correct the interference by one or more of the following measures:

– Reorient or relocate the receiving antenna.
– Increase the separation between the equipment and receiver.
– Connect the equipment into an outlet on a circuit different from that to which the receiver is connected.
– Consult the dealer or an experienced radio/TV technician for help.

Radiofrequency radiation exposure Information:

The radiated output power of the device is far below the FCC radio frequency exposure limits. Nevertheless, the device shall be used in such a manner that the potential for human contact during normal operation is minimized.

This equipment complies with FCC radiation exposure limits set forth for an uncontrolled environment. This equipment should be installed and operated with minimum distance of 20 cm between the radiator and your body. This transmitter must not be co-located or operating in conjunction with any other antenna or transmitter.

ISED Notice (Canada)

This device contains licence-exempt transmitter(s)/ receiver(s) that comply with Innovation, Science and Economic Development Canada's licence-exempt RSS(s). Operation is subject to the following two conditions:

1. this device may not cause interference, and
2. this device must accept any interference, including interference that may cause undesired operation of the device.

This equipment complies with Canada radiation exposure limits set forth for an uncontrolled environment. This equipment should be installed and operated with minimum distance of 20 cm between the radiator and your body. This transmitter must not be co-located or operating in conjunction with any other antenna or transmitter.

Certification information: You can find FCC- and IC-ID on the display under **<Settings>** → **<Certifications>**.

Privacy notice

If the on-board computer is sent to Bosch Service because it requires servicing, the data stored on the on-board computer may be transmitted to Bosch.

Product Description and Specifications

Intuvia 100 Product Features



(1) *Bluetooth*® button
(2) Battery compartment cover
(3) Locking screw support
(4) On-board computer contact
(5) Reset button
(6) Locking screw for on-board computer
(7) Holder for on-board computer
(8) On-board computer cradle
(9) On-board computer
(10) Rubber seal
(11) Non-rechargeable battery (button/coin cell type CR2450)
(12) Slotted screwdriver[a)]
(13) Battery compartment
(14) Holder fastening screw

a) Not included in the scope of delivery

Display Elements of On-Board Computer

- **(a)** Battery charge indicator
- **(b)** Bike lights display
- **(c)** Assistance level indicator
- **(d)** Drive unit assistance indicator
- **(e)** Unit indicator
- **(f)** Text indicator
- **(g)** Navigation bar
- **(h)** Value indicator
- **(i)** Speedometer

Intended Use

The **Intuvia 100** on-board computer is designed to display cycling data.

To access the full functionality of the eBike system and **Intuvia 100** on-board computer, you will need a compatible smartphone installed with the **eBike Flow** app (available from the Apple App Store or the Google Play Store), e.g. for **<Reset trip>**.

Technical Data

On-board computer		Intuvia 100
Product code		BHU3200
Operating temperature[A)]	°F	23 to 104
Batteries		1 × CR2450
Storage temperature	°F	50 to 104
Protection rating		IP54
Weight, approx.	lb	0.14
Bluetooth® Low Energy 5.0		
– Frequency	MHz	2400–2480
– Transmission power	mW	≤ 1

A) Temperatures outside of this range may cause faults in the display.

The license information for the product can be accessed at the following Internet address: http://www.bosch-ebike.com/licences.

Assembly

Inserting and Removing the On-Board Computer

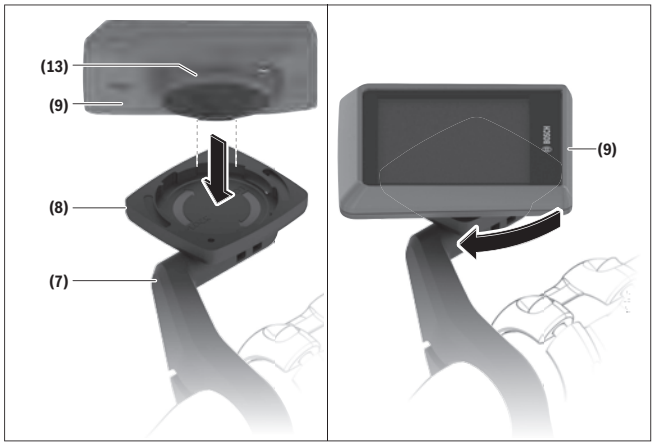

To **insert** the on-board computer, insert the lugs of the battery compartment **(13)** into the cradle **(8)** of the holder, and press the on-board computer gently down. To lock, turn the on-board computer clockwise until it engages.

To **remove** the on-board computer **(9)**, turn it counterclockwise and remove the on-board computer from the cradle **(8)**.

- ▸ **When you park up the eBike, remove the on-board computer.**

Inserting the Locking Screw

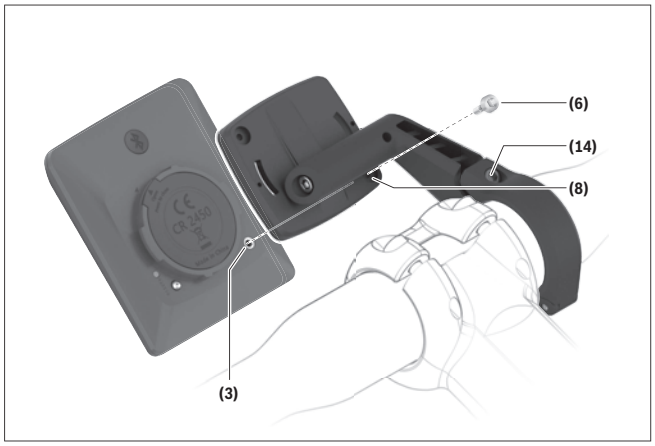

The on-board computer can be secured in place to prevent it from being removed from the holder. The on-board computer must be in the holder for this.

Undo the fastening screw **(14)** of the clamp with a hex key until the holder **(7)** can be moved. Turn the holder **(7)** until the bottom side of the on-board computer is accessible. Insert the locking screw **(6)** and bolt it with the on-board computer. Align the holder **(7)** correctly with the on-board computer and tighten the fastening screw **(14)** again with a hex key.

Note: The locking screw is not designed to prevent theft.

Operation

Connection of the On-Board Computer with the eBike System (Pairing)

Your on-board computer is generally already connected with the eBike system. If this is not the case, proceed as follows:

– Install the **eBike Flow** app.
– Activate *Bluetooth*® on your smartphone and open the **eBike Flow** app.
– Briefly press the *Bluetooth*® button.
– The device identification is shown on the display.
– Select the required tool with the same identification in the **eBike Flow** app.

You can find further information at the following link: https://www.bosch-ebike.com/de/help-center/intuvia-100.

Depending on the operating system of the smartphone, the **eBike Flow** app can be downloaded free of charge from the Apple App Store or Google Play Store.

Scan the code with your smartphone to download the **eBike Flow** app.

Switching the On-board computer On/Off

Switch on the eBike system.

To **switch on** the on-board computer, gently move the eBike or tap the display.

The following options are available for **switching off** the on-board computer:

– Press the ON/OFF button on the operating unit to switch off the eBike system.
  The on-board computer is also switched off.
– Remove the on-board computer from its holder.
  The on-board computer switches off automatically after 60 s.

Power supply of the On-board Computer

The on-board computer is provided with energy by the CR2450 button/coin cell.

Changing the Non-Rechargeable Battery

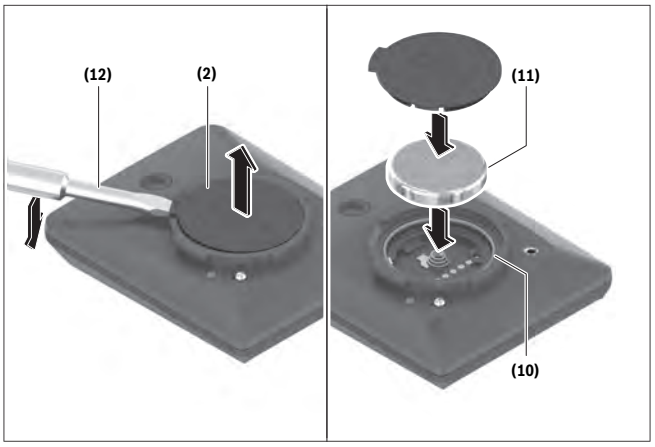

When the non-rechargeable battery of the on-board computer is nearly drained, you're shown a corresponding message on the display. Open the battery compartment cover **(2)** with a slotted screwdriver **(12)**, remove the used non-rechargeable battery and insert a new non-rechargeable battery of type CR2450. You can obtain the non-rechargeable batteries recommended by Bosch from your bicycle dealer.

When inserting the non-rechargeable battery, ensure that the rubber seal **(10)** is correctly positioned. Seal the battery compartment and slide the on-board computer onto the holder.

Battery Charge Indicator

The on-board computer shows the state of charge of the eBike rechargeable battery in percent. A notification is displayed once when the battery's state of charge falls below 30 %, and again when it falls below 10 %. The notification can be confirmed, or it simply disappears after 5 s.

Operation

The *Bluetooth*® **(1)** button has various functions. If the on-board computer was connected with an operating unit and has been removed from the holder, the displays can be switched within 60 s. To do so, briefly press the *Bluetooth*® **(1)** button.

Note: If you are not going to be using your eBike for several weeks, remove the on-board computer from its holder and set the on-board computer to storage mode. To do so, press the *Bluetooth*® **(1)** button for 8 to11 s.

The reset button **(5)** serves to reset the on-board computer to factory settings and delete all connections.

The on-board computer can be operated and the indicators can be controlled via one of the depicted operating units. The meaning of the buttons on the operating units for the display indicators can be found in the following overview.

Depending on how long it is pressed for, the select button has 2 functions.

LED Remote

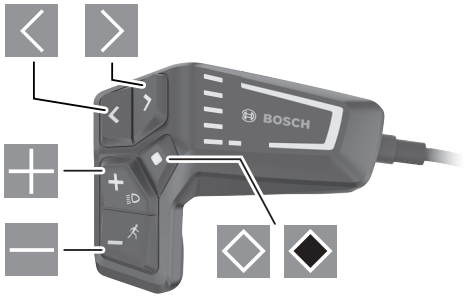

Mini Remote

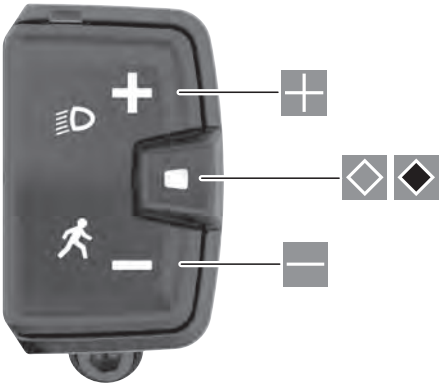

- Scroll left (only for LED Remote)
- Scroll right (only for LED Remote)
- Increase assistance level
- Decrease assistance level
- Select button (press briefly)
- Select button (press and hold > 1 s)

Note: All interface displays and texts on the following pages correspond to the release status of the software. The interface displays and texts may change slightly following a software update.

Note: Depending on the lighting conditions, there is background lighting that is only activated by pressing a button. The lighting duration can be adjusted.

Displays and settings of the on-board computer

Speed and distance indicators

The speedometer always displays the current speed.

You can choose from the following functions in the function display (combination of text indicator and value indicator):

- **<Distance>**: Distance traveled since the last reset
- **<Riding time>**: Journey time since the last reset
- **<Time>**: Current time
- **<Range>**: Estimated range of the available battery charge (at constant conditions such as assistance level, route profile, etc.)
- **<Avg. Speed>**: Average speed achieved since the last reset
- **<Max. Speed>**: Maximum speed achieved since the last reset
- **<Total distance>**: Total distance traveled with the eBike (cannot be reset)

Note: The on-board computer automatically displays a gear change recommendation when riding the eBike. The display of the gear change recommendation is superimposed over the text display **(f)** of the on-board computer, and can be deactivated manually via the basic settings.

Switching Between Display Functions



Press the ◁ or ▷ button until the required function is displayed.



Press the ◇ select button until the required function is displayed.

Certain settings cannot be assumed on the on-board computer, but only in the **eBike Flow** app, e.g.:

- **<Wheel circum.>**
- **<Range reset>**
- **<Auto trip reset>**

In addition, you receive an overview of the operating hours and the installed components in the **eBike Flow** app.

Displaying/Adjusting Basic Settings

Note: The settings menu cannot be called up while riding.

To get to the basic settings menu, press the ◇ select button on the operating unit until **<Settings>** appears in the text display.

Switching/Leaving Basic Settings



Press the ◁ or ▷ button until the required basic setting is displayed.



Press the ◇ select button until the required basic setting is displayed.

Note: The changed setting is automatically saved upon leaving the respective basic setting.

Changing Basic Settings



To scroll down, briefly press the ◇ select button until the required value is displayed.



To scroll down, press the ◇ select button > 1 s until the required value is displayed.

Note: Pressing and holding the relevant button switches automatically to the next value in the basic settings.

You can choose between the following basic settings:

- **<Language>**: You can select your preferred system language here.
- **<Units>**: Displaying the speed and distance in either kilometers or miles.
- **<Time>**: You can set the time here.
- **<Time format>**: Displaying the time in 12-hour or 24-hour format.
- **<Shift recommendation>**: You can choose whether or not to have a prompt displayed when it is recommended that you change gears.
- **<Backlight>**: You can set the duration of the background lighting here.

- **<Brightness>**: The brightness can be adjusted in steps of 5 % from 5 to 100 %.
- **<Settings reset>**: You can reset the settings by pressing and holding the select button here.
- **<Certifications>**: FCC-ID: 2AWRC-BHU3200, IC-ID: 26294-BHU3200
- **<Back>**: You can leave the settings menu with this function.

Leaving the Basic Settings Menu

You leave the basic settings menu automatically if you are inactive for 60 s or start riding the eBike, or by using the **<Back>** function.



Briefly press the ◇ select button to leave the basic settings menu using the **<Back>** function.



Press the ◆ select button > 1 s to leave the basic settings menu using the **<Back>** function.

Maintenance and Service

Maintenance and cleaning

Do not clean any of the components with pressurized water.

Keep the screen of your on-board computer clean. Dirt can cause faulty brightness detection.

Clean your on-board computer using a soft cloth dampened only with water. Do not use cleaning products of any kind.

Have your eBike system checked by an expert at least once a year (including mechanical parts, up-to-dateness of system software).

The bike retailer can also schedule the service based on a mileage and/or a time period. In this case, the on-board computer displays a message telling you when the service date is due each time it is switched on.

Please have your eBike serviced and repaired by an authorized bicycle dealer.

- ▸ **Only have repairs performed by a certified bicycle dealer.**

Note: If you hand over your eBike to a bicycle dealer for maintenance, it is recommended to temporarily deactivate **<eBike Lock>** and **<eBike Alarm>** to avoid a false alarm.

After-sales service and advice on using products

If you have any questions about the eBike system and its components, contact an authorized bicycle dealer.

For contact details of authorized bike dealerships, please visit www.bosch-ebike.com.

Transport

- ▸ **If you transport your eBike attached to the outside of your car, e.g. on a bike rack, remove the on-board computer and the eBike battery to avoid damaging them.**

Battery Recycling Program



The drive unit, on-board computer incl. operating unit, battery, speed sensor, accessories and packaging should be disposed of in an environmentally correct manner.

Do not dispose of eBikes and their components with household waste.



You may recycle your Bosch battery pack by calling 1.800.822.8837.

Robert Bosch GmbH
72757 Reutlingen
Germany

www.bosch-ebike.com

0 275 U07 3BI (2022.06) T / 44

Owner’s Manual – The Bosch Drive System
Kiox 300

BHU3600



en Original operating instructions

This manual contains important safety, performance and service information. Read and understand it along with the information provided to you by your bicycle manufacturer before using the product, and keep it for reference.

Table of contents

Introduction 2
About Warnings 2
General Warnings 2
Using your Manual 3
Operating your Bosch Display Unit 4
Safety instructions 4
Product Features Kiox 300 7
Assembly 9
Operation 10
Maintenance and servicing 12
Maintenance and cleaning 12
After-sales service and advice on using products 12
Battery Recycling Program 12

Introduction

About Warnings

This manual contains many **DANGER**, **WARNING**, and **CAUTION** indicators concerning the consequences of failure to use, assemble, maintain, store, inspect and dispose of a Bosch-equipped eBike in a safe manner.

– The combination of the safety alert symbol and the word **DANGER** indicates a hazardous situation that, if not avoided, will result in death or serious injury.
– The combination of the safety alert symbol and the word **WARNING** indicates a hazardous situation that, if not avoided, could result in death or serious injury.
– The combination of the safety alert symbol and the word **CAUTION** indicates a hazardous situation that, if not avoided, could result in minor or moderate injury.

General Warnings



Read all safety warnings and all instructions. Failure to follow the warnings and instructions may result in death or serious injury.

Save all safety warnings and instructions for future reference.

The term **battery pack** used in these operating instructions refers to all original Bosch eBike battery packs.

▶ **Read ALL accompanying manuals before riding the bike for the first time.** Your Bosch Drive System comes with additional manuals and documents provided by the manufacturer of the bicycle and other components. Failure to read and understand safety information can result in death or serious injury.

⚠ WARNING

▶ **This manual contains important safety, performance and service information.** Read it before you take the first ride on your new bicycle, and keep it for reference. The manual can also be found online at www.bosch-ebike.com.

▶ **This manual is intended to be read together with the separate user manual provided with your bicycle.** Be sure to read all provided documents including labels on the product before your first ride.

▶ **Take responsibility for your own SAFETY.** If you have any questions or do not understand something, consult with your dealer or the bicycle or component manufacturer.

▶ **Some eBike accessories may present a choking hazard to small children.** Keep these accessories away from children.

⚠ CAUTION

▶ **The Bosch Drive System adds weight to your bicycle which you may not be used to lift.** Avoid injury, use proper lifting techniques.

Using your Manual

In addition to the functions outlined here, changes to software relating to troubleshooting and functional modifications may be introduced at any time.

Graphics

The bicycle shown in this manual may differ slightly from your bicycle, but will be similar enough to help you understand our instructions.

RIGHT-HAND and LEFT-HAND sides are determined by facing in the direction the bicycle will travel when going forward. When you see a broken line (------), the item referred to is hidden from view.

Operating your Bosch Display Unit

Safety instructions



Read all the safety information and instructions. Failure to observe the safety information and follow instructions may result in electric shock, fire and/or serious injury.

Save all safety warnings and instructions for future reference.

The term **battery pack** used in these operating instructions refers to all original Bosch eBike battery packs.

- ▶ **Read and observe the safety warnings and instructions in all operating instructions of the eBike system and your eBike.**
- ▶ **Do not attempt to fix display or remote control while riding!**
- ▶ **Do not allow yourself to be distracted by the display of the on-board computer.** If you do not concentrate exclusively on the traffic around you, you risk being involved in an accident. If you want to change any settings on the on-board computer other than the assistance level, always stop before entering the relevant data.
- ▶ **Do not operate your smartphone during the journey.** If you do not concentrate exclusively on the traffic around you, you risk being involved in an accident. When using your smartphone, only enter the relevant data once you've stopped.
- ▶ **Set the display brightness such that you can adequately see important information like speed or warning symbols.** An incorrectly set display brightness can result in dangerous situations.
- ▶ **Do not open the on-board computer.** Opening the on-board computer can result in irreparable damage and void your warranty.
- ▶ **Do not use the on-board computer as a handle.** Lifting the eBike up by the on-board computer can cause irreparable damage to the on-board computer.
- ▶ **Do not stand your bicycle upside down on its saddle and handlebars if the on-board computer or its holder protrude from the handlebars.** This may irreparably damage the on-board computer or the holder. Also remove the on-board computer before placing the bicycle on a wall mount to ensure that the on-board computer does not fall off or become damaged.
- ▶ **Do not enter information or make selections while riding.** Interacting with the display unit while riding can lead to accidents causing serious injury or death. You must observe road and traffic conditions, and comply with traffic laws at all times.
- ▶ **Accessing other apps, reading pop up messages/other content, or otherwise using your mobile device while operating an eBike may be distracting. Distracted driving is a serious safety concern and can lead to accidents causing serious injury or death. In order to prevent distracted driving, most mobile devices come equipped with a “Do Not Disturb” mode. The “Do Not Disturb” mode should be used while operating an eBike.** Please consult your device-specific instructions for more information. You, as the eBike operator, are fully responsible for ensuring that you pay attention to road conditions and comply with traffic laws at all times.
- ▶ **Do not activate push assistance function while riding on the bike.** Only use push assitance function when pushing the eBike.
- ▶ Please note that certain State or local laws may require that class III eBikes must be equipped with a functioning speedometer that displays speed in miles per hour. Riders must be aware of any and all applicable rules and regulations related to the operation or use of class III eBikes in any applicable ju-

risdictions before operating or otherwise using this product.

Safety Instructions in Conjunction with the Navigation System

- **Do not plan any routes while riding. Make sure that you come to a complete stop and only input a new destination while at a standstill.** If you do not concentrate exclusively on the traffic around you, you risk being involved in an accident.
- **Discontinue following your route if the navigation system suggests a path for you to take that may be risky or dangerous for you according to your capabilities as a rider.** Allow the navigation system to select an alternative route for you instead.
- **Make sure to observe all traffic signs regardless of the route proposed by the navigation system.** The navigation system is unable to take roadworks or temporary diversions into account.
- **Do not use the navigation system in circumstances where special attention must be given to safety, or if it is unclear how to proceed (road closures, diversions, etc.).** Always carry additional map sources and means of communication.
- **The navigation system instructs you to perform an unsafe or illegal maneuver.** Cancel the navigation system and choose an alternative route.
- **The navigation system directs you into an unsafe area.** Cancel the navigation system and choose an alternative route.
- **The navigation system does not direct you to the nearest emergency facility when needed.** Make an emergency call and inquire as to the quickest available route.
- **The location of the bicycle is indicated incorrectly by the navigation system.** Use a secondary source of information to determine where you are located currently.
- **The volume of the navigation system prevents you from hearing surrounding traffic while riding.** Ensure that you are able to perceive sounds from traffic in the vicinity at all times, so that you can react to potential dangers appropriately.
- NAVIGATION SERVICES ARE PROVIDED FOR PLANNING PURPOSES ONLY. INFORMATION FROM NAVIGATION SERVICES MAY DIFFER FROM ACTUAL CONDITIONS. USER MUST EXERCISE INDEPENDENT JUDGEMENT WHEN USING THE NAVIGATION SERVICES TO ENSURE THAT THE ROUTE PROVIDED BY THE NAVIGATION SERVICES IS SAFE AND APPROPRIATE FOR EBIKE USAGE.

NOTICE: This device complies with part 15 of the FCC Rules. Operation is subject to the following two conditions:

1. This device must not cause harmful interference, and
2. this device must accept any interference received, including interference that may cause undesired operation.

NOTICE: Changes or modifications made to this equipment not expressly approved by the Robert Bosch GmbH may void the FCC authorization to operate this equipment.

NOTE: This equipment has been tested and found to comply with the limits for a Class B digital device, pursuant to Part 15 of the FCC Rules. These limits are designed to provide reasonable protection against harmful interference in a residential installation. This equipment generates, uses and can radiate radio frequency energy and, if not installed and used in accordance with the instructions, may cause harmful interference to radio communications. However, there is no guarantee that interference will not occur in a particular installation. If this equipment does cause harmful interference to radio or television reception, which can be determined by turning the equipment off and on, the user is encouraged to try to correct the interference by one or more of the following measures:

- Reorient or relocate the receiving antenna.
- Increase the separation between the equipment and receiver.

- Connect the equipment into an outlet on a circuit different from that to which the receiver is connected.
- Consult the dealer or an experienced radio/TV technician for help.

CAN ICES3(B)/NMB3(B)
Responsible Party for North-America:
Bosch eBike Systems Americas
Robert Bosch LLC
27211 Burbank, Foothill Ranch, CA 92610, USA,
www.bosch-ebike.com/us/

Privacy notice

If the on-board computer is sent to Bosch Service because it requires servicing, the data stored on the on-board computer may be transmitted to Bosch.

Product Features Kiox 300

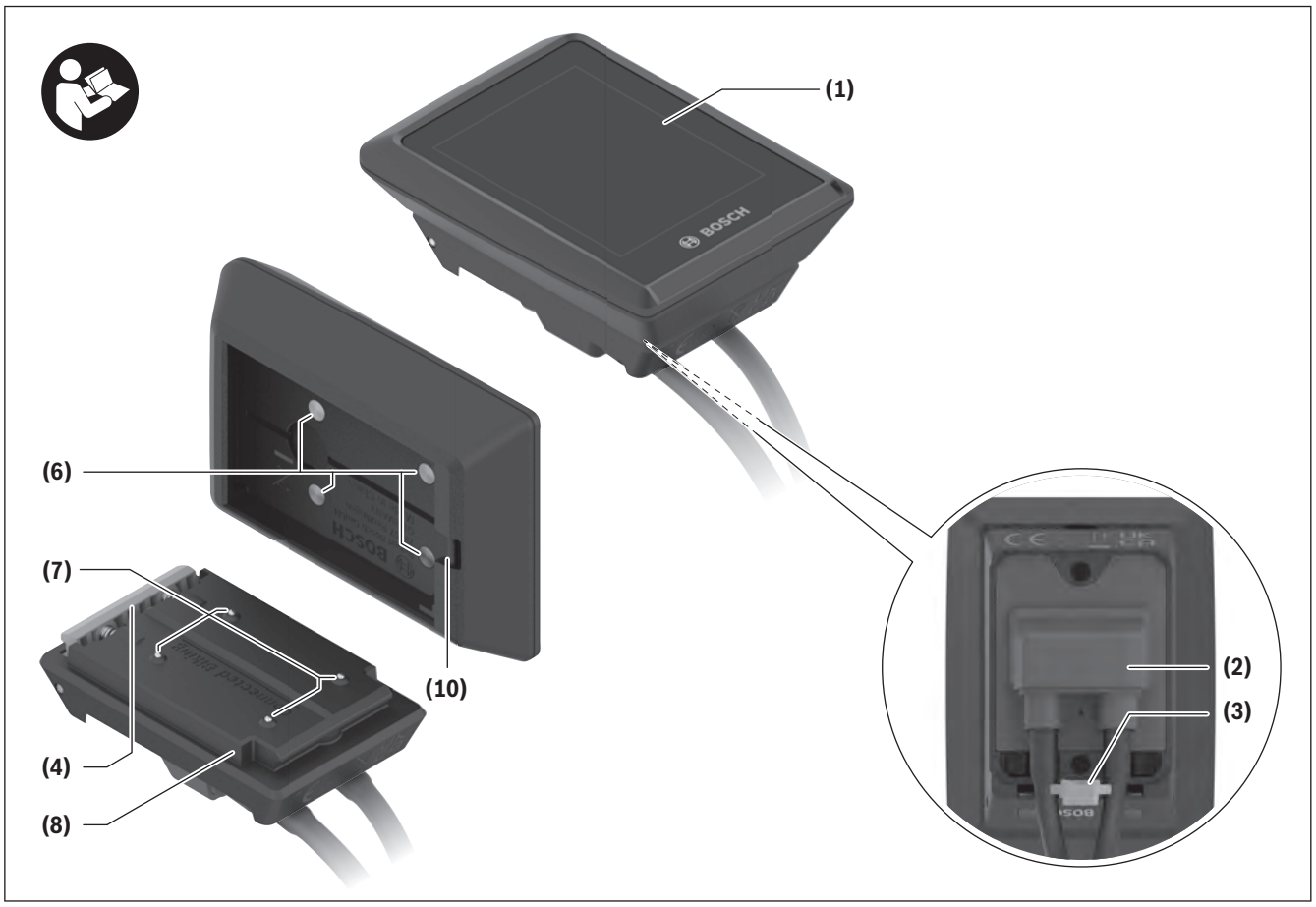

(1) Display
(2) Cable outlet
(3) Removal blocker
(4) Snap-in hook
(5) Adapter tray
(6) Display contacts
(7) Holder contacts
(8) Display mount
(9) Display mount fastening screw
(10) Bridge for retaining strap[a)]

a) Retaining strap is not included in the scope of delivery.

Intended use

The **Kiox 300** on-board computer is designed to display cycling data.

To access the full functionality of the **Kiox 300** on-board computer, you will need a compatible smartphone installed with the **eBike Flow** app (available from the Apple App Store or the Google Play Store).

Technical data

On-board computer		Kiox 300
Product code		BHU3600
Operating temperature [A)]	°F	+23 to +104
Storage temperature	°F	+50 to +104
Protection rating		IP54
Weight, approx.	oz	1.13

A) Temperatures outside of this range may cause faults in the display.

The license information for the product is available at the following Internet address: https://www.bosch-ebike.com/licences

Assembly

Fitting and removing the display (see figure A)

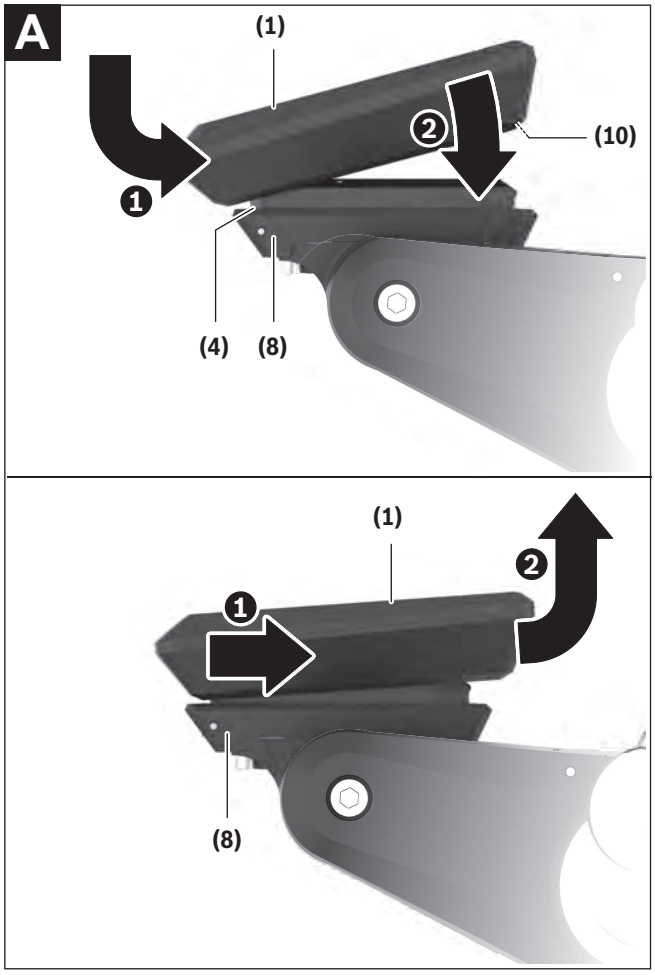

To **fit** the display **(1)**, attach the display **(1)** to the front edge of the display fixture **(8)** in the direction of travel, on the latching hook **(4)** ❶ and press the rear side of the display **(1)** on the display fixture **(8)** ❷.

To **remove** the display **(1)**, pull the display **(1)** towards you ❶ until you are able to lift off the display **(1)** ❷.

A retaining strap can be secured to the bridge **(10)**.

Note: The eBike system switches off if you are traveling slower than 1.9 mph and take the on-board computer out of the holder. This does not apply to eBikes with a support up to 28 mph.

Inserting the Locking Plate (see figure B)

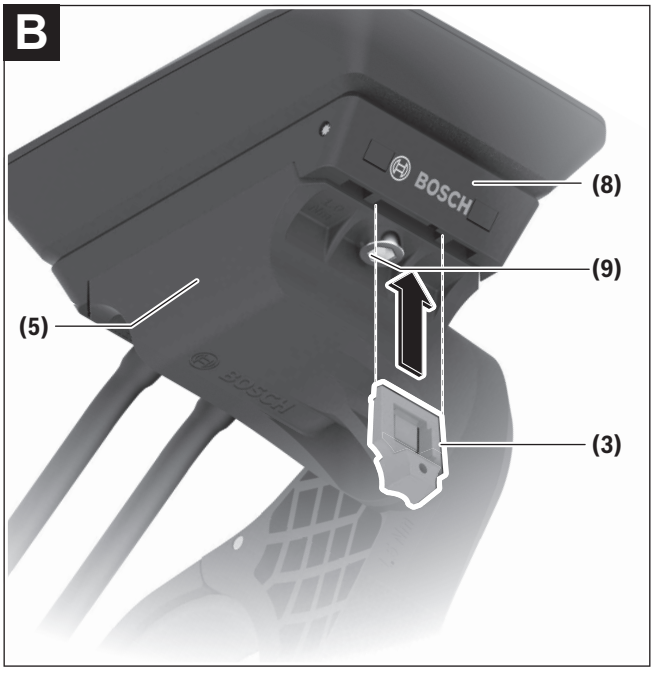

Note: Depending on the design/installation of the display mount, it may be the case that the removal blocker cannot be used. The display must be installed here.

Insert the locking plate **(3)** into the adapter shell **(5)** from below until you hear the locking plate **(3)** click into place.

From this point onwards, you can no longer lift off the display **(1)** from the display fixture **(8)** without removing the display fixture **(8)** from the adapter shell **(5)** by loosening the two fastening screws **(9)**.

Note: The locking plate **(3)** is not an anti-theft device.

Operation

The displays are operated and the indicators are controlled via an operating unit.

The meaning of the buttons on the operating unit for the display indicators can be found in the following overview. Depending on how long it is pressed for, the select button has 2 functions.

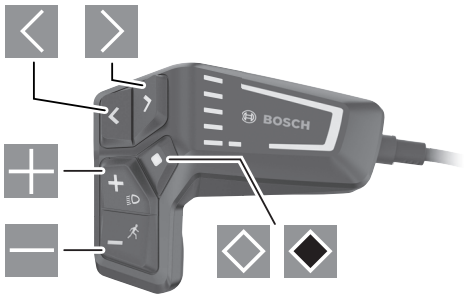

- Scroll to the left
- Scroll to the right
- Scroll up
- Scroll down
- Switch to the second screen level (press briefly)
  Open the settings menu in the status screen (press briefly)
- Open page-related options
  e.g. **<Reset trip>** (press and hold > 1 s)

Note: All interface displays and texts on the following pages correspond to the release status of the software. The interface displays and texts may change slightly following a software update.

Status screen

From the start page, you can access the status page by pressing the ◁ button.

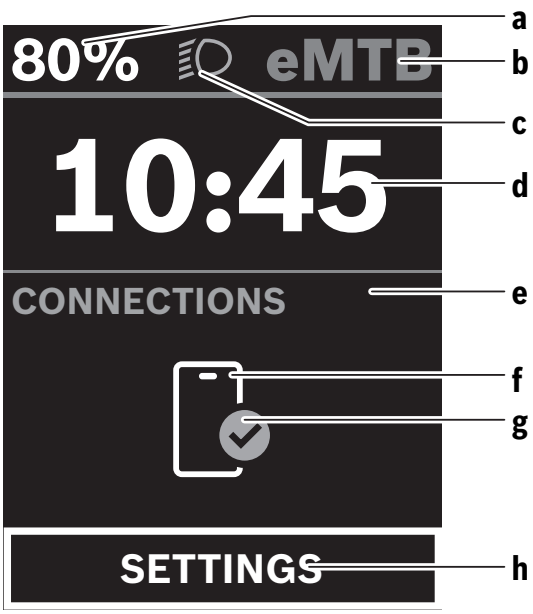

a Battery charge
b Assistance level
c Bicycle lights
d Time
e Connection indicator
f Smartphone connection
g Connection status
h Settings menu

You can access the settings menu from this page by pressing the ◇ button.

Note: The settings menu cannot be called up while riding.

The settings menu **<SETTINGS>** includes the following menu items:

– **<My eBike>**
  You can find the following menu items here.
  - **<Range reset>**
    The value for the range can be reset here.
  - **<Auto trip reset>**
    The settings for automatic reset can be adjusted here.

- **<Wheel circumf.>**
  The value of the wheel circumference can be adjusted or reset to the default setting here.
- **<Service>**
  Your next service appointment is displayed here if it has been set by the bicycle dealer.
- **<Components>**
  The components used with their version numbers are displayed here.

– **<My Kiox>**
You can find the following menu items here.
- **<Statusbar>**
  You can choose here between the **<Battery>**, **<Time>** and **<Speed>** displays.
- **<Language>**
  You can select your preferred system language here.
- **<Units>**
  You can choose between metric and imperial measurements here.
- **<Time>**
  You can set the time here.
- **<Time format>**
  You can choose between 2 time formats here.
- **<Brightness>**
  You can set the display brightness here.
- **<Settings reset>**
  You can reset all of the system settings to the default values here.

– Under the **<Information>** menu item, you will find the contact details (**<Contact>**) and certificates (**<Certificates>**).

You can leave the settings menu by pressing the ◆ or ◁ button.

Press the ▷ button to access the start page.

Start page

If you did not select another page before the last time you switched off, you will be shown this page.

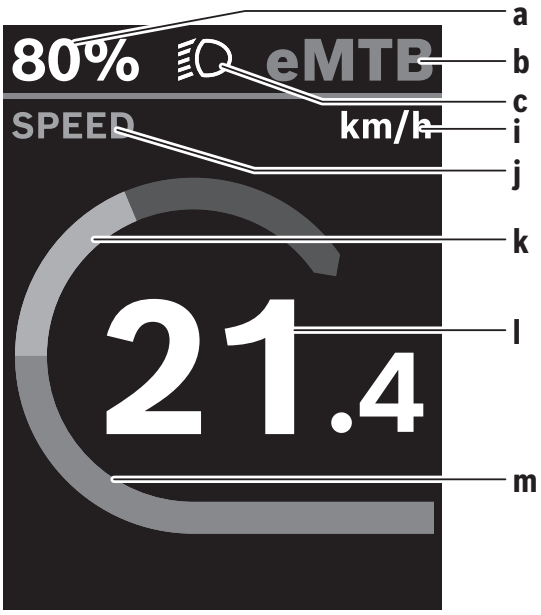

a Battery charge
b Assistance level
c Bicycle lights
i Unit of speed indicator
j Indicator name
k Your performance
l Speed
m Motor output

The **a** to **c** indicators form the status bar and are shown on every page.

You can use the ◁ button to change from this page to the status page or press the ▷ button to access additional pages. Statistical data, the battery range and the average values are displayed on these pages.

From each of these pages, you can access the second level of data by pressing the ◇ button.

If the user is on a different page from the start page when they switch off, the most recently displayed page will appear again when the eBike is switched on.

Pressing and holding the ◆ select button enables you to reset the statistical data for your journey or excursion (not on the **<SETTINGS>** page).

Maintenance and servicing

Maintenance and cleaning

Do not clean any of the components with pressurized water.

Keep the screen of your on-board computer clean. Dirt can cause faulty brightness detection.

Clean your on-board computer using a soft cloth dampened only with water. Do not use cleaning products of any kind.

Have your eBike system checked by an expert at least once a year (including mechanical parts, up-to-dateness of system software).

The bike retailer can also schedule the service based on a mileage and/or a time period. In this case, the on-board computer displays a message telling you when the service date is due each time it is switched on.

Please have your eBike serviced and repaired by an authorized bicycle dealer.

- ▶ **Only have repairs performed by a certified bicycle dealer.**

Note: If you hand over your eBike to a bicycle dealer for maintenance, it is recommended to temporarily deactivate **<eBike Lock>** and **<eBike Alarm>** to avoid a false alarm.

After-sales service and advice on using products

If you have any questions about the eBike system and its components, contact an authorized bicycle dealer.

For contact details of authorized bike dealerships, please visit www.bosch-ebike.com.

Battery Recycling Program



The drive unit, on-board computer incl. operating unit, battery, speed sensor, accessories and packaging should be disposed of in an environmentally correct manner.

Do not dispose of eBikes and their components with household waste.



You may recycle your Bosch battery pack by calling 1.800.822.8837.

Robert Bosch GmbH
72757 Reutlingen
Germany

www.bosch-ebike.com

0 275 U07 3BK (2022.03) T / 40

Owner’s Manual – The Bosch Drive System
LED Remote

BRC3600



en Original operating instructions

This manual contains important safety, performance and service information. Read and understand it along with the information provided to you by your bicycle manufacturer before using the product, and keep it for reference.

Table of contents

Introduction 2
About Warnings 2
General Warnings 2
Using your Manual 3
Operating the Control Unit 4
Safety instructions 4
Product description and specifications 7
Operation 9
Establishing a smartphone connection 11
Troubleshooting 14
Maintenance/cleaning 15
After-sales service and advice on using products 15
Battery Recycling Program 16

Introduction

About Warnings

This manual contains many **DANGER**, **WARNING**, and **CAUTION** indicators concerning the consequences of failure to use, assemble, maintain, store, inspect and dispose of a Bosch-equipped eBike in a safe manner.

– The combination of the safety alert symbol and the word **DANGER** indicates a hazardous situation that, if not avoided, will result in death or serious injury.
– The combination of the safety alert symbol and the word **WARNING** indicates a hazardous situation that, if not avoided, could result in death or serious injury.
– The combination of the safety alert symbol and the word **CAUTION** indicates a hazardous situation that, if not avoided, could result in minor or moderate injury.

General Warnings



Read all safety warnings and all instructions. Failure to follow the warnings and instructions may result in death or serious injury.

Save all safety warnings and instructions for future reference.

The term **battery pack** used in these operating instructions refers to all original Bosch eBike battery packs.

▶ **Read ALL accompanying manuals before riding the bike for the first time.** Your Bosch Drive System comes with additional manuals and documents provided by the manufacturer of the bicycle and other components. Failure to read and understand safety information can result in death or serious injury.

⚠ WARNING

▶ **This manual contains important safety, performance and service information.** Read it before you take the first ride on your new bicycle, and keep it for reference. The manual can also be found online at www.bosch-ebike.com.

▶ **This manual is intended to be read together with the separate user manual provided with your bicycle.** Be sure to read all provided documents including labels on the product before your first ride.

▶ **Take responsibility for your own SAFETY.** If you have any questions or do not understand something, consult with your dealer or the bicycle or component manufacturer.

▶ **Some eBike accessories may present a choking hazard to small children.** Keep these accessories away from children.

⚠ CAUTION

▶ **The Bosch Drive System adds weight to your bicycle which you may not be used to lift.** Avoid injury, use proper lifting techniques.

Using your Manual

In addition to the functions outlined here, changes to software relating to troubleshooting and functional modifications may be introduced at any time.

Graphics

The bicycle shown in this manual may differ slightly from your bicycle, but will be similar enough to help you understand our instructions.

RIGHT-HAND and LEFT-HAND sides are determined by facing in the direction the bicycle will travel when going forward. When you see a broken line (------), the item referred to is hidden from view.

Operating the Control Unit

Safety instructions



Read all the safety information and instructions. Failure to observe the safety information and follow instructions may result in electric shock, fire and/or serious injury.

Save all safety warnings and instructions for future reference.

The term **battery pack** used in these operating instructions refers to all original Bosch eBike battery packs.

- ▸ **Read and observe the safety warnings and instructions in all operating instructions of the eBike system and your eBike.**
- ▸ **Do not attempt to fix display or remote control while riding!**
- ▸ **Do not activate push assistance function while riding on the bike.** Only use push assitance function when pushing the eBike.
- ▸ **The push assistance function must only be used when pushing the eBike.** There is a risk of injury if the wheels of the eBike are not in contact with the ground while using the push assistance.
- ▸ **When the push assistance is activated, the pedals may turn at the same time.** When the push assistance function is activated, make sure that there is enough space between your legs and the turning pedals to avoid the risk of injury.
- ▸ **When using the push assistance, ensure that you can always control the eBike and hold it securely.** The push assistance can be suspended under certain conditions (e.g. obstacle on the pedal or accidentally slipping off the button of the operating unit). The eBike can suddenly move backwards towards you or start to tip. This poses a particular risk for the user if there is an additional load. When using the push assistance on the eBike, do not place the eBike in situations in which you cannot hold the eBike by yourself.
- ▸ **Do not stand your bicycle upside down on its handlebars and saddle if the control unit or its holder protrude from the handlebars.** This may irreparably damage the control unit or the holder.
- ▸ **Do not connect a charger to the eBike system if the eBike system displays a critical error.** This may result in damage to your battery. The battery may catch fire, thereby resulting in serious burns and other injuries.
- ▸ **The control unit features a wireless interface. Local operating restrictions, e.g. in airplanes or hospitals, must be adhered to.**
- ▸ **Caution!** When using the control unit with *Bluetooth*®, this may cause interference that affects other devices and systems, airplanes and medical devices (e.g. pacemakers, hearing aids). Similarly, the possibility that this may cause damage to humans and animals in the immediate vicinity cannot be completely excluded. Do not use the control unit with *Bluetooth*® in the vicinity of medical devices, gas stations, chemical plants, areas with a potentially explosive atmosphere or on blast sites. Do not use the control unit with *Bluetooth*® in airplanes. Avoid using the device in close proximity to your body over an extended period of time.
- ▸ The *Bluetooth*® word mark and logos are registered trademarks owned by Bluetooth SIG, Inc. and any use of such marks by Bosch eBike Systems is under licence.
- ▸ **Observe all national regulations which set out the approved use of eBikes.**

Safety warnings for charging the battery inside the remote control

- **Only charge the remote control with USB power source (5 V, 600 mA max) and USB cable rated at least 600 mA.** Using USB power source or USB cable not appropriately rated for the application may result in fire, explosion or personal injury.
- **Charge the remote control in temperatures above +32 degrees F (0 degrees C) and below +104 degrees F (40 degrees C). Store remote control in locations where temperatures will not exceed 104 degrees F (40 degrees C).** This is important to prevent serious damage to the battery in the remote control.
- **Do not expose remote control to fire or excessive temperature.** Exposure to fire or temperature above 212 °F (100 °C) may cause explosion.
- **Do not recharge the remote control (via USB port) in damp or wet environment.** Water entering remote control may result in electric shock or fire.
- **Never submerge remote control in fluid of any kind or allow fluid to enter them.** Corrosive or conductive fluid (such as seawater or industrial chemical or bleach containing products, etc.) can cause short circuit which may result in fire, personal injury and property damage.
- **Battery leakage may occur under extreme usage or temperature conditions. Avoid contact with skin and eyes.** The battery liquid is caustic and could cause chemical burns to tissues. If liquid comes in contact with skin, wash quickly with soap and water. If the liquid contacts your eyes, immediately flush eyes with water for a minimum of 15 minutes and seek medical attention.
- **Before each use, check the remote control, cable and plug.** If damage is detected, do not use the remote control. Damaged remote control, charging cables and plugs increase the risk of a fire, explosion and personal injury.
- **Do not disassemble remote control.** No user serviceable part inside. Incorrect reassembly or damage may result in fire or explosion.

NOTICE: This device complies with part 15 of the FCC Rules. Operation is subject to the following two conditions:

1. This device must not cause harmful interference, and
2. this device must accept any interference received, including interference that may cause undesired operation.

NOTICE: Changes or modifications made to this equipment not expressly approved by the Robert Bosch GmbH may void the FCC authorization to operate this equipment.

NOTE: This equipment has been tested and found to comply with the limits for a Class B digital device, pursuant to Part 15 of the FCC Rules. These limits are designed to provide reasonable protection against harmful interference in a residential installation. This equipment generates, uses and can radiate radio frequency energy and, if not installed and used in accordance with the instructions, may cause harmful interference to radio communications. However, there is no guarantee that interference will not occur in a particular installation. If this equipment does cause harmful interference to radio or television reception, which can be determined by turning the equipment off and on, the user is encouraged to try to correct the interference by one or more of the following measures:

– Reorient or relocate the receiving antenna.
– Increase the separation between the equipment and receiver.
– Connect the equipment into an outlet on a circuit different from that to which the receiver is connected.
– Consult the dealer or an experienced radio/TV technician for help.

Radiofrequency radiation exposure Information: The radiated output power of the device is far below the FCC radio frequency exposure limits. Neverthe-

less, the device shall be used in such a manner that the potential for human contact during normal operation is minimized.

This equipment complies with FCC radiation exposure limits set forth for an uncontrolled environment. This equipment should be installed and operated with minimum distance of 20 cm between the radiator and your body. This transmitter must not be co-located or operating in conjunction with any other antenna or transmitter.

ISED Notice (Canada)

This device contains licence-exempt transmitter(s)/ receiver(s) that comply with Innovation, Science and Economic Development Canada's licence-exempt RSS(s). Operation is subject to the following two conditions:

1. this device may not cause interference, and
2. this device must accept any interference, including interference that may cause undesired operation of the device.

This equipment complies with Canada radiation exposure limits set forth for an uncontrolled environment. This equipment should be installed and operated with minimum distance of 20 cm between the radiator and your body. This transmitter must not be co-located or operating in conjunction with any other antenna or transmitter.

Privacy notice

When you connect the eBike to the **Bosch DiagnosticTool 3**, data about Bosch drive unit (e.g. energy consumption, temperature, etc.) is transferred to Bosch eBike Systems (Robert Bosch GmbH) for the purposes of product improvement. You can find more information about this on the Bosch eBike website at www.bosch-ebike.com.

Product description and specifications

LED Remote product features

All illustrations of bike parts except for the drive unit, on-board computer including operating unit, speed sensor and the corresponding holders are schematic and may differ on your eBike.

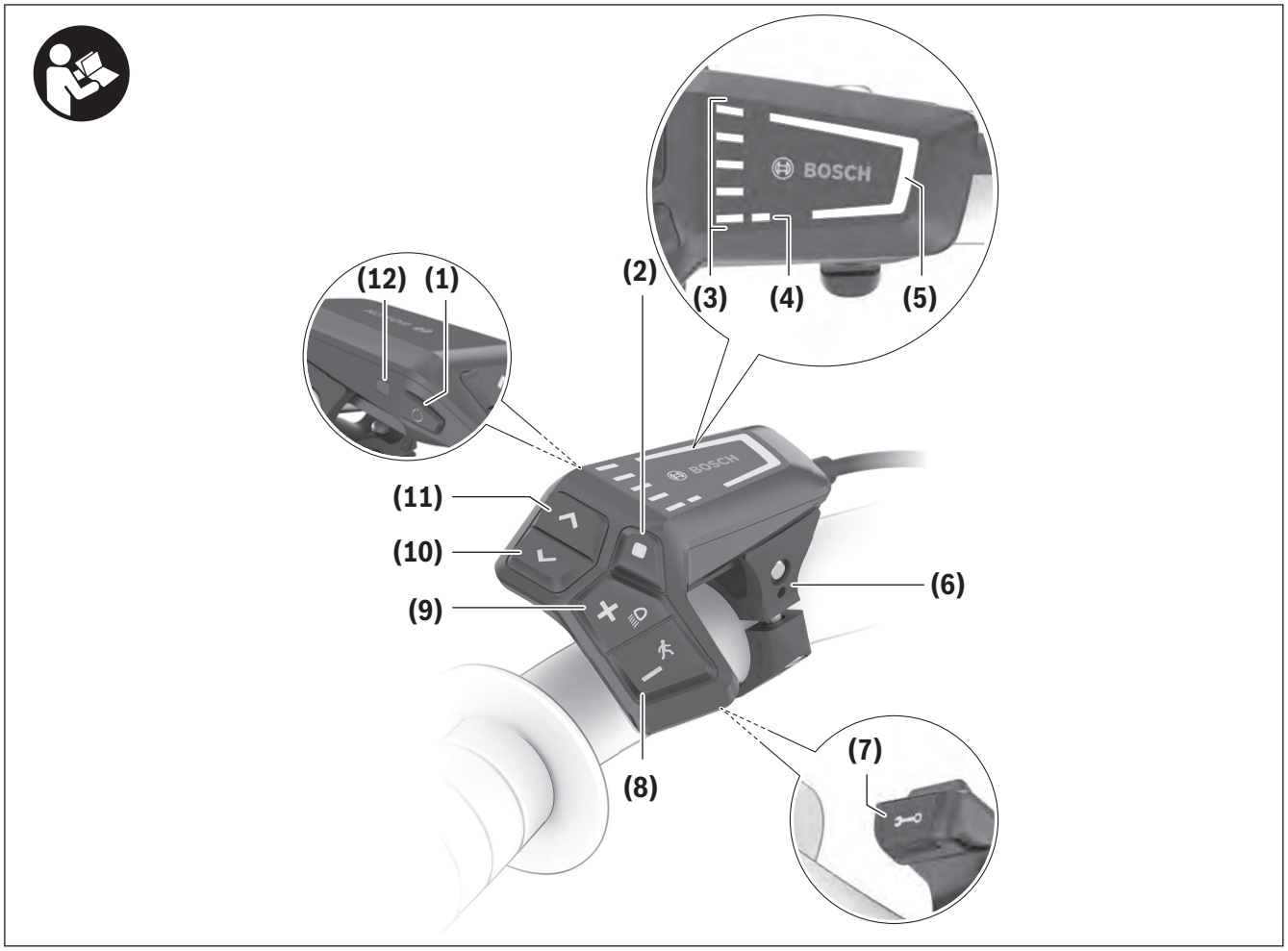

(1) On/off button
(2) Select button
(3) LEDs for battery charge indicator
(4) ABS LED (optional)
(5) Assistance level LED
(6) Holder
(7) Diagnostics connection (for servicing purposes only)
(8) Button for decreasing support level **–**/ walk assistance
(9) Button for increasing support level **+**/ bike lights
(10) Button to reduce brightness/ go back
(11) Button to increase brightness/ go forward
(12) Ambient light sensor

Intended use

The **LED Remote** control unit is designed to control a Bosch eBike system and control an on-board computer. You can also use it to change the assistance level in the **eBike Flow** app.

In order to be able to use the control unit to its fullest extent, a compatible smartphone with the **eBike Flow** app is required.

The **eBike Flow** app can be accessed via *Bluetooth*®.

Depending on the operating system of the smartphone, the **eBike Flow** app can be downloaded free of charge from the Apple App Store or Google Play Store.

Scan the code with your smartphone to download the **eBike Flow** app.

Technical data

Control unit		LED Remote
Product code		BRC3600
Max. charging current of USB port[A)]	mA	600
USB port charging voltage[A)]	V	5
USB charging cable[B)]		USB Type-C®[C)]
Charging temperature	°F	32 to 113
Operating temperature	°F	23 to 104
Storage temperature	°F	50 to 104
Diagnostic interface		USB Type-C®[C)]
Internal lithium-ion battery	V mAh	3.7 75
Protection rating		IP54
Dimensions (without fastening)	mm	74 × 53 × 35
Weight	oz	1
Bluetooth® Low Energy 5.0		
– Frequency	MHz	2400–2480
– Transmission power	mW	1

A) Information for charging **LED Remote**; external devices cannot be charged.

B) Not included as part of standard delivery

C) USB Type-C® and USB-C® are trademarks of USB Implementers Forum.

The license information for the product is available at the following Internet address: https://www.bosch-ebike.com/licences

Operation

Prerequisites

The eBike system can only be activated when the following requirements are met:

- A sufficiently charged battery is inserted (see battery operating instructions).
- The speed sensor is connected properly (see drive unit operating instructions).

Control unit power supply

If a sufficiently charged eBike battery is inserted into the eBike and the eBike system is switched on, then the control unit battery is powered and charged by the eBike battery.

If the state of charge of the internal battery is very low, you can charge the internal battery via the diagnostics connection **(7)** with a USB Type C® cable using a power bank or another suitable power source (charging voltage **5 V**; charging current max. **600 mA**).

Always close the flap of the diagnostics connection **(7)** so that no dust or moisture can enter.

Switching the eBike system on/off

To **switch on** the eBike system, briefly press the on/off button **(1)**. After the start animation, the state of charge of the battery is displayed in color with the battery charge indicator **(3)** and the set assistance level with the **(5)** display. The eBike is ready to ride.

The display brightness is controlled by the ambient light sensor **(12)**. Therefore, do not cover the ambient light sensor **(12)**.

The drive is activated as soon as you start pedaling (except at assistance level **OFF**). The motor output depends on the settings of the assistance level.

As soon as you stop pedaling when in normal operation, or as soon as you have reached a speed of **20/28 mph**, the eBike drive unit switches off the assistance. The drive is automatically re-activated as soon you start pedaling again and the speed is below **20/28 mph**.

To **switch off** the eBike system, press the on/off button **(1)** briefly (< 3 s). The battery charge indicator **(3)** and the assistance level LED **(5)** go out.

If no power is drawn from the eBike drive for about **10** minutes (e.g. because the eBike is not moving) and no button is pressed on the on-board computer or the control unit of the eBike, the eBike system will switch off automatically.

Battery charge indicator

The battery charge indicator **(3)** displays the eBike battery's state of charge. The state of charge of the eBike battery can also be checked on the LEDs of the battery itself.

In the **(3)** display, each ice-blue bar represents 20 % capacity and each white bar represents 10 % capacity. The topmost bar shows the maximum capacity.

Example: Four ice-blue bars and one white bar are displayed. The state of charge is between 81 % and 90 %.

If capacity is low, both of the lower displays change color:

Bar	Capacity
2 × orange	30 % to 21 %
1 × orange	20 % to 11 %
1 × red	10 % to reserve
1 × red flashing	Reserve to empty

If the eBike battery is being charged, the topmost bar on the battery charge indicator **(3)** flashes.

Setting the assistance level

On the control unit using the **(8)** and**(9)** buttons, you can set how much the eBike drive assists you while pedaling. The assistance level can be changed at any time, even while cycling, and is displayed in color.

Level	Notes
OFF	Motor support is switched off. The eBike can just be moved by pedaling, as with a normal bicycle.

Level	Notes
ECO	Effective support with maximum efficiency, for maximum range
TOUR	Steady support, long range for touring
TOUR+	Dynamic support for normal riding and biking sports
eMTB/ **SPORT**	Optimal support whatever the terrain, rapid acceleration when starting from a standstill, improved dynamics and top performance
TURBO	Maximum support even at a high cadence, for sport cycling
AUTO	The assistance is adapted dynamically to the riding situation.
RACE	Maximum support on the eMTB race course; very direct response behavior and maximum "Extended Boost" for the best possible performance in competitive situations
CARGO[A)]	Steady, powerful support, to be able to transport heavy weights

A) The **CARGO** assistance level may also have a different designation.

The designations and configuration of the assistance levels can be preconfigured by the manufacturer and selected by the bicycle retailer.

Adjusting the assistance level

The assistance levels can be adjusted within certain parameters using the **eBike Flow** app. You therefore have the option of adjusting your eBike to your personal requirements.

Creating a mode that is totally your own is not possible. You can only adjust the modes that have been enabled on your system by the manufacturer or the dealer. This may even be less than 4 modes.

Due to technical limitations, you cannot adjust the **eMTB** and **TOUR+** modes. It may also be the case that a mode cannot be adjusted due to restrictions in your country.

The following parameters are available to you for adjustment:

- Support in relation to the basic value of the mode (within the legal specifications)
- Response behavior of the drive
- Throttling down speed (within the legal specifications)
- Maximum torque (within the framework of the drive limits)

Note: Please ensure that your changed mode retains the position, name and color on all on-board computers and operating elements.

Interaction between the eBike system and gear-shifting

The gear shifting should be used with an eBike drive in the same way as with a normal bicycle (observe the operating instructions of your eBike on this point).

Irrespective of the type of gear shifting, it is advisable that you briefly reduce the pressure on the pedals when changing gear. This will aid gear shifting and reduce wear on the powertrain.

By selecting the correct gear, you can increase your speed and range while applying the same amount of force.

Switching bike lights on/off

Before starting each journey, check that your bike lights are working correctly.

To **switch on** the bike lights, press the **(9)** button for more than 1 s.

You can use the **(11)** and **(10)** buttons to control the brightness of the LEDs on the control unit.

Switching the push assistance on/off

The push assistance aids you when pushing your eBike. The speed of this function depends on the selected gear and can reach a maximum of **2.5 mph**.

▶ **The push assistance function must only be used when pushing the eBike.** There is a risk of injury if the wheels of the eBike are not in contact with the ground while using the push assistance.

To **start** walk assistance, press the **(8)** button for more than 1 s and keep it pressed. The battery

charge indicator **(3)** goes out and a white moving light in the direction of travel shows that it is ready.

To **activate** walk assistance, one of the following actions must occur within the next 10 s:
- Push the eBike forwards.
- Push the eBike backwards.
- Perform a sideways tilting movement with the eBike.

After activation, the motor begins to push and the continuously filling white bars change color to ice-blue.

If you release the **(8)** button, walk assistance is paused. You can reactivate walk assistance within 10 s by pressing the **(8)** button.

If you do not reactivate walk assistance within 10 s, walk assistance automatically switches off.

Walk assistance is always ended if:
- the rear wheel jams;
- the bicycle cannot move over ridges;
- a body part is blocking the bike crank;
- an obstacle continues to turn the crank;
- you start pedaling;
- the **(9)** button or on/off button **(1)** is pressed.

Walk assistance has a roll-away lock, which means that even after successfully using walk assistance, the drive system actively brakes backwards rolling for a few seconds and you cannot push the eBike backwards or can only do so with difficulty.

The push assistance function is subject to local regulations; the way it works may therefore differ from the description above. It can also be deactivated.

ABS – Anti-lock braking system (optional)

If the bicycle is equipped with a Bosch eBike ABS, the ABS LED **(4)** lights up when the eBike system starts.

After setting off, the ABS internally checks its function and the ABS LED goes out.

In the event of a fault, the ABS LED **(4)** lights up together with the orange flashing assistance level LEDs **(5)**. You can acknowledge the error with the select button **(2)**; the flashing assistance level LED **(5)** goes out. While the ABS LED **(4)** is lit up, the ABS is not in operation.

For details on the ABS and how it works, please refer to the ABS operating instructions.

Establishing a smartphone connection

In order to be able to use the following eBike functions, a smartphone with the **eBike Flow** app is required.

Connection to the app occurs via a *Bluetooth*® connection.

Switch on the eBike system and do not start riding the eBike.

Begin *Bluetooth*® pairing by long pressing (> 3 s) the on/off button **(1)**. Release the on/off button **(1)** as soon as the topmost bar on the battery charge indicator shows the pairing process by flashing blue.

Confirm the connection request in the app.

Activity tracking

In order to record activities, it is necessary to register and log into the **eBike Flow** app.

To record activities, you must consent to the storage of your location data in the app. Without this, your activities cannot be recorded in the app. For location data to be recorded, you must be logged in as the user.

<eBike Lock>

<eBike Lock> can be activated for all users via the **eBike Flow** app. A key to unlock the eBike is saved on the smartphone for this purpose.

<eBike Lock> is automatically active in the following cases:
- When switching off the eBike system via the operating unit
- When automatically switching off the eBike system
- By removing the on-board computer

The eBike is unlocked when the eBike system is switched on and the smartphone is connected with the eBike via *Bluetooth*®.

<eBike Lock> is connected to your **user account**.

Should you lose your smartphone, you can log in via another smartphone using the **eBike Flow** app, and unlock your user account and the eBike.

Warning! If you select a setting in the app that leads to disadvantages for the **<eBike Lock>** (e.g. deletion of your eBike or user account), then you will first be shown warning messages. **Please read through these thoroughly and adhere to the warnings that are issued (e.g. before deleting your eBike or user account).**

In order to be able to set up the **<eBike Lock>**, the following conditions must be fulfilled:

- The **eBike Flow** app has been installed.
- A user account has been created.
- No update is currently being carried out on the eBike.
- The eBike is connected to the smartphone via *Bluetooth*®.
- The eBike is stationary.
- The smartphone is connected to the Internet.
- The eBike rechargeable battery is sufficiently charged, and the charging cable is not connected.

You can set up **<eBike Lock>** in the **eBike Flow** app under the **settings** menu item.

You can deactivate the support of your drive unit with immediate effect by switching on **<eBike Lock>** in the **eBike Flow** app. Deactivation can only be canceled if your smartphone is nearby when switching on the eBike system. Your smartphone must have *Bluetooth*® switched on for this, and the **eBike Flow** app must be active in the background. The **eBike Flow** app does not have to be opened. If **<eBike Lock>** is activated, you can also use your eBike without support from the drive unit.

Compatibility

<eBike Lock> is compatible with these Bosch eBike product lines:

Drive unit	Product line
BDU374x	Performance Line CX
BDU33xx	Performance Line

How it works

In conjunction with **<eBike Lock>**, the smartphone works in a similar way to a key for the drive unit. **<eBike Lock>** becomes active when the eBike system is switched off. As long as the **<eBike Lock>** eBike lock is active after switching on, this is indicated on the **LED Remote** operating unit by flashing white and on the display computer with a padlock symbol.

Note: <eBike Lock> alone does not provide adequate theft protection; it is simply a supplement to a mechanical lock. **<eBike Lock>** does not provide any form of mechanical lock for the eBike. Only the assistance from the drive unit is deactivated. As long as the smartphone is connected with the eBike via *Bluetooth*®, the drive unit is unlocked.

If you give third parties temporary or permanent access to your eBike or want to bring your eBike in for a service, deactivate **<eBike Lock>** in the **eBike Flow** app under the **settings** menu item. If you want to sell your eBike, also delete the eBike from your user account in the **eBike Flow** app under the **settings** menu item.

If the eBike system is switched off, the drive unit will emit a "Lock" sound (i.e. an audio signal that is played **once**) to indicate that the assistance from the drive unit is switched off.

Note: The audio signal will only be played if the system is switched on.

If the eBike system is switched on, the drive unit will emit two "Unlock" sounds (i.e. an audio signal that is played **twice**) to indicate that the assistance from the drive unit is enabled again.

The "Lock" sound helps you to recognize whether **<eBike Lock>** is activated on your eBike. The audio signal is activated by default, it can be deactivated in the **eBike Flow** app under the **settings** menu item by selecting the lock symbol below your eBike.

Note: If you are no longer able to set up or switch off **<eBike Lock>**, please contact your bicycle dealer.

Replacing eBike components and <eBike Lock>

Replacing the smartphone

1. Install the **eBike Flow** app on the new smartphone.
2. Log in using **the same** account with which you activated **<eBike Lock>**.
3. **<eBike Lock>** is displayed as set up in the **eBike Flow** app.

Replacing the drive unit

1. **<eBike Lock>** is displayed as deactivated in the **eBike Flow** app.
2. Activate **<eBike Lock>** by pushing the **<eBike Lock>** control unit to the right.
3. If you hand over your eBike to a bicycle dealer for maintenance, it is recommended to temporarily deactivate **<eBike Lock>** to avoid a false alarm.

Software updates

Software updates must be started manually in the **eBike Flow** app.

Software updates are transferred from the app to the control unit in the background as soon as it is connected to the app. During the update process, a green flashing on the battery charge indicator **(3)** shows the progress. The system is then restarted.

You can control the software updates via the **eBike Flow** app.

Troubleshooting

The control unit shows whether critical errors or less critical errors occur in the eBike system.

The error messages generated by the eBike system can be read via the **eBike Flow** app or by your bicycle retailer.

Via a link in the **eBike Flow** app, information about the error and support for rectifying the error can be displayed.

Less critical errors

Less critical errors are shown by the assistance level LED **(5)** flashing orange. Pressing the select button **(2)** confirms the error and the assistance level LED **(5)** once again continuously shows the color of the set assistance level.

You can use the following table to rectify the errors yourself if necessary. Otherwise, please contact your bicycle retailer.

Number	Troubleshooting
523005	The indicated error numbers show that there is interference when the sensors detect the magnetic field. See whether you have lost the magnet while riding. If you are using a magnet sensor, check that the sensor and magnet have been properly installed. Make sure too that the cable to the sensor is not damaged. If you are using a rim magnet, make sure that you do not have any magnetic field interference in the vicinity of the drive unit.
514001	
514002	
514003	
514006	

Critical errors

Critical errors are shown by the assistance level LED **(5)** and the battery charge indicator **(3)** flashing red. If a critical fault occurs, follow the handling instructions on the following table.

Number	Handling instructions
660001	Do not charge the battery and do not continue to use! Please contact your Bosch eBike specialist retailer.
660002	
890000	– Acknowledge the error code. – Restart the system. If the problem persists: – Acknowledge the error code. – Perform the software update. – Restart the system. If the problem persists: – Please contact your Bosch eBike specialist retailer.

Maintenance/cleaning

⚠ WARNING

- **Do not open any of the components. Service should only be carried out at an authorized Bosch eBike dealer.** Failure to follow above warning can cause death or serious injury. Refer to your bicycle manual or component manual for all non-Bosch drive system components.
- **Do not submerge your eBike components in water, or wash with pressurized hose.** Your Bosch drive unit is designed to be water tight to rain water or non-pressure hose washing.
- **Do not paint any components of the Bosch drive system as they may cause premature failure of the component.**

After-sales service and advice on using products

If you have any questions about the eBike system and its components, contact an authorized bicycle dealer.

For contact details of authorized bike dealerships, please visit www.bosch-ebike.com.

Please contact an authorized bicycle dealer if the battery is no longer working.

Battery Recycling Program

The drive unit, on-board computer incl. operating unit, battery, speed sensor, accessories and packaging should be disposed of in an environmentally correct manner.

Do not dispose of eBikes and their components with household waste.

You may recycle your Bosch battery pack by calling 1.800.822.8837.

Robert Bosch GmbH
72757 Reutlingen
Germany

www.bosch-ebike.com

0 275 U07 3RL (2022.03) T / 50

Owner’s Manual – The Bosch Drive System
System Controller | Mini Remote

BRC3100 | BRC3300



en Original operating instructions

This manual contains important safety, performance and service information. Read and understand it along with the information provided to you by your bicycle manufacturer before using the product, and keep it for reference.

Table of Contents

Introduction 2
About Warnings 2
General Warnings 2
Using your Manual 3
Operating your Bosch Drive System 4
Safety Instructions 4
Intended Use 6
System Controller/Mini Remote Product Features 7
Technical Data 8
Operation 9
Maintenance and Service 15
Maintenance and Cleaning 15
After-sales service and advice on using products 15
Battery Recycling Program 16

Introduction

About Warnings

This manual contains many **DANGER**, **WARNING**, and **CAUTION** indicators concerning the consequences of failure to use, assemble, maintain, store, inspect and dispose of a Bosch-equipped eBike in a safe manner.

– The combination of the safety alert symbol and the word **DANGER** indicates a hazardous situation that, if not avoided, will result in death or serious injury.
– The combination of the safety alert symbol and the word **WARNING** indicates a hazardous situation that, if not avoided, could result in death or serious injury.
– The combination of the safety alert symbol and the word **CAUTION** indicates a hazardous situation that, if not avoided, could result in minor or moderate injury.

General Warnings



Read all safety warnings and all instructions. Failure to follow the warnings and instructions may result in death or serious injury.

Save all safety warnings and instructions for future reference.

The term **battery pack** used in these operating instructions refers to all original Bosch eBike battery packs.

▶ **Read ALL accompanying manuals before riding the bike for the first time.** Your Bosch Drive System comes with additional manuals and documents provided by the manufacturer of the bicycle and other components. Failure to read and understand safety information can result in death or serious injury.

⚠ WARNING

▶ **This manual contains important safety, performance and service information.** Read it before you take the first ride on your new bicycle, and keep it for reference. The manual can also be found online at www.bosch-ebike.com.

▶ **This manual is intended to be read together with the separate user manual provided with your bicycle.** Be sure to read all provided documents including labels on the product before your first ride.

▶ **Take responsibility for your own SAFETY.** If you have any questions or do not understand something, consult with your dealer or the bicycle or component manufacturer.

▶ **Some eBike accessories may present a choking hazard to small children.** Keep these accessories away from children.

⚠ CAUTION

▶ **The Bosch Drive System adds weight to your bicycle which you may not be used to lift.** Avoid injury, use proper lifting techniques.

Using your Manual

In addition to the functions outlined here, changes to software relating to troubleshooting and functional modifications may be introduced at any time.

Graphics

The bicycle shown in this manual may differ slightly from your bicycle, but will be similar enough to help you understand our instructions.

RIGHT-HAND and LEFT-HAND sides are determined by facing in the direction the bicycle will travel when going forward. When you see a broken line (------), the item referred to is hidden from view.

Operating your Bosch Drive System

Safety Instructions



Read all the safety information and instructions. Failure to observe the safety information and follow instructions may result in electric shock, fire and/or serious injury.

Save all safety warnings and instructions for future reference.

The term **battery pack** used in these operating instructions refers to all original Bosch eBike battery packs.

- ▶ **Read and observe the safety warnings and instructions in all operating instructions of the eBike system and your eBike.**
- ▶ **Do not attempt to fix display or remote control while riding!**
- ▶ **The push assistance function must only be used when pushing the eBike.** There is a risk of injury if the wheels of the eBike are not in contact with the ground while using the push assistance.
- ▶ **When the push assistance is activated, the pedals may turn at the same time.** When the push assistance function is activated, make sure that there is enough space between your legs and the turning pedals to avoid the risk of injury.
- ▶ **When using the push assistance, ensure that you can always control the eBike and hold it securely.** The push assistance can be suspended under certain conditions (e.g. obstacle on the pedal or accidentally slipping off the button of the operating unit). The eBike can suddenly move backwards towards you or start to tip. This poses a particular risk for the user if there is an additional load. When using the push assistance on the eBike, do not place the eBike in situations in which you cannot hold the eBike by yourself.
- ▶ **Do not stand your bicycle upside down on its handlebars and saddle if the control unit or its holder protrude from the handlebars.** This may irreparably damage the control unit or the holder.
- ▶ **Do not connect a charger to the eBike system if the eBike system displays a critical error.** This may result in damage to your battery. The battery may catch fire, thereby resulting in serious burns and other injuries.
- ▶ **The control unit features a wireless interface. Local operating restrictions, e.g. in airplanes or hospitals, must be adhered to.**
- ▶ **Caution!** When using the control unit with *Bluetooth*®, this may cause interference that affects other devices and systems, airplanes and medical devices (e.g. pacemakers, hearing aids). Similarly, the possibility that this may cause damage to humans and animals in the immediate vicinity cannot be completely excluded. Do not use the control unit with *Bluetooth*® in the vicinity of medical devices, gas stations, chemical plants, areas with a potentially explosive atmosphere or on blast sites. Do not use the control unit with *Bluetooth*® in airplanes. Avoid using the device in close proximity to your body over an extended period of time.
- ▶ The *Bluetooth*® word mark and logos are registered trademarks owned by Bluetooth SIG, Inc. and any use of such marks by Bosch eBike Systems is under licence.
- ▶ Before using the System Controller while riding, make sure to familiarize yourself with System Controller controls and functions by reviewing the operating instructions in this user manual. Practice riding under traffic-free conditions and make sure that you are comfortable using the System Controller before using it in traffic.
- ▶ Do not use the System Controller while riding if you are not comfortable doing so. Do not allow yourself to be distracted by the System Controller. Please note that distracted riding can lead to serious in-

jury, up to and including death. Riders must observe road and traffic conditions and comply with all applicable traffic laws at all times.

- Please note that certain State or local laws may require that class III eBikes must be equipped with a functioning speedometer that displays speed in miles per hour. Riders must be aware of any and all applicable rules and regulations related to the operation or use of class III eBikes in any applicable jurisdictions before operating or otherwise using this product.

Safety instructions for button/coin cells

- **WARNING! Ensure that the button/coin cell is kept out of the reach of children.** Button/coin cells are dangerous.
- **Button/coin cells must never be swallowed or inserted into any other part of the body. If you suspect that someone has swallowed a button/coin cell or that a button/coin cell has entered the body in another way, seek medical attention immediately.** Swallowing button/coin cells can result in severe internal burns and death within two hours.
- **Ensure that button/coin cell replacement is carried out properly.** There is a risk of explosion.
- **Only use the button/coin cells listed in this operating manual.** Do not use any other button/coin cells or other forms of electrical power supply.
- **Do not attempt to recharge the button/coin cell and do not short circuit the button/coin cell.** The button/coin cell may leak, explode, catch fire and cause personal injury.
- **Remove and dispose of drained button/coin cells correctly.** Drained button/coin cells may leak and cause personal injury or damage the product.
- **Do not overheat the button/coin cell or throw it into fire.** The button/coin cell may leak, explode, catch fire and cause personal injury.
- **Do not damage the button/coin cell and or take the coin cell apart.** The button/coin cell may leak, explode, catch fire and cause personal injury.
- **Do not allow damaged button/coin cells to come into contact with water.** Leaking lithium may mix with water to create hydrogen, which could cause a fire, an explosion, or personal injury.

NOTICE: This device complies with part 15 of the FCC Rules. Operation is subject to the following two conditions:

1. This device must not cause harmful interference, and
2. this device must accept any interference received, including interference that may cause undesired operation.

NOTICE: Changes or modifications made to this equipment not expressly approved by the Robert Bosch GmbH may void the FCC authorization to operate this equipment.

NOTE: This equipment has been tested and found to comply with the limits for a Class B digital device, pursuant to Part 15 of the FCC Rules. These limits are designed to provide reasonable protection against harmful interference in a residential installation. This equipment generates, uses and can radiate radio frequency energy and, if not installed and used in accordance with the instructions, may cause harmful interference to radio communications. However, there is no guarantee that interference will not occur in a particular installation. If this equipment does cause harmful interference to radio or television reception, which can be determined by turning the equipment off and on, the user is encouraged to try to correct the interference by one or more of the following measures:

- Reorient or relocate the receiving antenna.
- Increase the separation between the equipment and receiver.
- Connect the equipment into an outlet on a circuit different from that to which the receiver is connected.
- Consult the dealer or an experienced radio/TV technician for help.

Radiofrequency radiation exposure Information: The radiated output power of the device is far below

the FCC radio frequency exposure limits. Nevertheless, the device shall be used in such a manner that the potential for human contact during normal operation is minimized.

This equipment complies with FCC radiation exposure limits set forth for an uncontrolled environment. This equipment should be installed and operated with minimum distance of 20 cm between the radiator and your body. This transmitter must not be co-located or operating in conjunction with any other antenna or transmitter.

ISED Notice (Canada)

This device contains licence-exempt transmitter(s)/ receiver(s) that comply with Innovation, Science and Economic Development Canada's licence-exempt RSS(s). Operation is subject to the following two conditions:

1. this device may not cause interference, and
2. this device must accept any interference, including interference that may cause undesired operation of the device.

This equipment complies with Canada radiation exposure limits set forth for an uncontrolled environment. This equipment should be installed and operated with minimum distance of 20 cm between the radiator and your body. This transmitter must not be co-located or operating in conjunction with any other antenna or transmitter.

Privacy Notice

When you connect the eBike to the **Bosch DiagnosticTool 3**, data about Bosch drive unit (e.g. energy consumption, temperature, etc.) is transferred to Bosch eBike Systems (Robert Bosch GmbH) for the purposes of product improvement. You can find more information about this on the Bosch eBike website at www.bosch-ebike.com.

Intended Use

The **System Controller** and **Mini Remote** operating units are designed to control a Bosch eBike system and to control an on-board computer. You can also use it to change the assistance level in the **eBike Flow** app.

In order to be able to use the control unit to its fullest extent, a compatible smartphone with the **eBike Flow** app is required.

Using the **eBike Flow** app, a *Bluetooth*® connection can be established between the smartphone and the eBike system, between the smartphone and **System Controller**, and between **System Controller** and **Mini Remote**.

Depending on the operating system of the smartphone, the **eBike Flow** app can be downloaded free of charge from the Apple App Store or Google Play Store.

Scan the code with your smartphone to download the **eBike Flow** app.

System Controller/Mini Remote Product Features

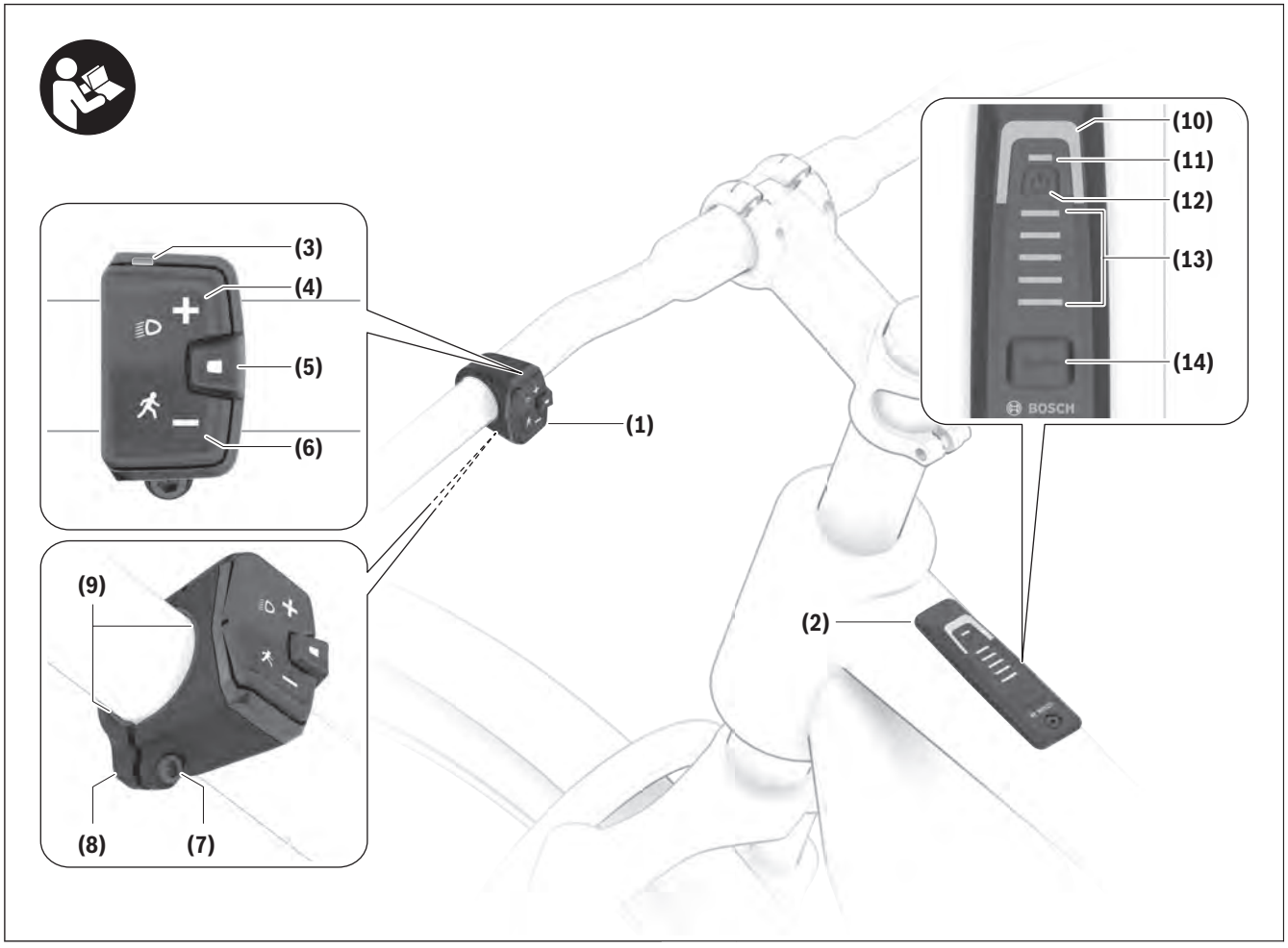

All illustrations of bike parts except for the drive unit, on-board computer including operating unit, speed sensor and the corresponding holders are schematic and may differ on your eBike.

The numbering of the components shown refers to the illustrations on the graphic pages at the beginning of the manual.

(1) **Mini Remote** operating unit (optional)
(2) Control unit **System Controller**
(3) LED indicator lamp
(4) Button for increasing support level **+**/ bike lights
(5) Select button
(6) Button for decreasing support level **–**/ walk assistance
(7) Fastening screw for holder
(8) Holder
(9) Rubber insert/battery holder
(10) Assistance level LED
(11) ABS LED (optional)/ambient light sensor
(12) On/off button
(13) LEDs for battery charge indicator
(14) Mode button

Technical Data

Control unit		System Controller
Product code		BRC3100
Operating temperature	°F	23 to 104
Storage temperature	°F	50 to 104
Protection rating		IP54
Dimensions	in	3.5 × 1.1 × 1.1
Weight	lb	0.08
Bluetooth® Low Energy 5.0		
– Frequency	MHz	2400–2480
– Transmission power	mW	≤ 1

Control unit		Mini Remote
Product code		BRC3300
Operating temperature	°F	23 to 104
Storage temperature	°F	50 to 104
Battery		1× CR1620
Protection rating		IP54
Dimensions	in	1.6 × 1.5 × 0.9
Weight	lb	0.08
Bluetooth® Low Energy 5.0		
– Frequency	MHz	2400–2480
– Transmission power	mW	≤ 1

The license information for the product is available at the following Internet address: https://www.bosch-ebike.com/licences

Operation

Requirements

The eBike system can only be activated when the following requirements are met:

- A sufficiently charged battery is inserted (see battery operating instructions).
- The speed sensor is connected properly (see drive unit operating instructions).

Operating unit power supply (System Controller)

If a sufficiently charged eBike battery is inserted into the eBike and the eBike system is switched on, then the control unit battery is powered and charged by the eBike battery.

Please contact your bicycle dealer if the operating unit battery is defective.

Operating unit (Mini Remote) power supply

The **Mini Remote** operating unit is supplied with voltage by a CR1620 button/coin cell.

Replacing the battery (Mini Remote)

If the battery in the **Mini Remote (1)** operating unit is low, the LED indicator lamp **(3)** lights up orange.

To replace the battery, unscrew the **Mini Remote (1)** operating unit from the handlebars. Remove the rubber insert **(9)**. This also functions as the battery holder. Remove the used battery and insert a new CR1620 battery in the rubber insert **(9)**. Push the battery and the rubber insert **(9)** into the **Mini Remote (1)** operating unit. If the battery is seated correctly, the LED indicator lamp **(3)** flashes green for 10 s. Then secure the **Mini Remote (1)** operating unit back onto the handlebars.

Note: The connection to the **System Controller** is not interrupted when the battery is replaced.

You can obtain the batteries recommended by Bosch from your bicycle dealer.

Switching the eBike system on/off

To **switch on** the eBike system, briefly press the on/off button **(12)**. After the start animation, the state of charge of the battery is displayed in color with the battery charge indicator **(13)** and the set assistance level with the **(10)** display. The eBike is ready to ride.

The display brightness is controlled by the ambient light sensor **(11)**. Therefore, do not cover the ambient light sensor **(11)**.

The drive is activated as soon as you start pedaling (except at assistance level **OFF**). The motor output depends on the settings of the assistance level.

As soon as you stop pedaling when in normal operation, or as soon as you have reached a speed of **20/28 mph**, the eBike drive unit switches off the assistance. The drive is automatically re-activated as soon you start pedaling again and the speed is below **20/28 mph**.

To **switch off** the eBike system, press the on/off button **(12)** briefly (< 3 s). The battery charge indicator **(13)** and the assistance level LED **(10)** go out.

If no power is drawn from the eBike drive for about **10** minutes (e.g. because the eBike is not moving) and no button is pressed on the on-board computer or the control unit of the eBike, the eBike system will switch off automatically.

Battery charge indicator

The battery charge indicator **(13)** displays the eBike battery's state of charge. The state of charge of the eBike battery can also be checked on the LEDs of the battery itself.

In the **(13)** display, each ice-blue bar represents 20 % capacity and each white bar represents 10 % capacity. The topmost bar shows the maximum capacity.

Example: Four ice-blue bars and one white bar are displayed. The state of charge is between 81 % and 90 %.

If capacity is low, both of the lower displays change color:

Bar	Capacity
2 × orange	30 % to 21 %
1 × orange	20 % to 11 %
1 × red	10 % to reserve
1 × red flashing	Reserve to empty

If the eBike battery is being charged, the topmost bar on the battery charge indicator **(13)** flashes.

Setting the assistance level

On the operating unit, you can set the level of assistance you want the eBike drive to provide you with while pedaling.

Mini Remote: Briefly press (< 1 s) the buttons to increase assistance **+ (4)** or decrease assistance **– (6)** in order to increase or decrease the assistance level accordingly.

System Controller: Briefly press (< 1 s) the mode button **(14)** to increase assistance.

Press the mode button **(14)** for longer than 1 s to decrease the assistance.

The assistance level can be changed at any time, even while cycling, and is displayed in color.

Level	Notes
OFF	Motor support is switched off. The eBike can just be moved by pedaling, as with a normal bicycle.
ECO	Effective support with maximum efficiency, for maximum range
TOUR	Steady support, long range for touring
TOUR+	Dynamic support for normal riding and biking sports
eMTB/ **SPORT**	Optimal support whatever the terrain, rapid acceleration when starting from a standstill, improved dynamics and top performance
TURBO	Maximum support even at a high cadence, for sport cycling
AUTO	The assistance is adapted dynamically to the riding situation.
RACE	Maximum support on the eMTB race course; very direct response behavior and maximum "Extended Boost" for the best possible performance in competitive situations
CARGO[A)]	Steady, powerful support, to be able to transport heavy weights

A) The **CARGO** assistance level may also have a different designation.

The designations and configuration of the assistance levels can be preconfigured by the manufacturer and selected by the bicycle retailer.

Interaction between the eBike system and gear-shifting

The gear shifting should be used with an eBike drive in the same way as with a normal bicycle (observe the operating instructions of your eBike on this point).

Irrespective of the type of gear shifting, it is advisable that you briefly reduce the pressure on the pedals when changing gear. This will aid gear shifting and reduce wear on the powertrain.

By selecting the correct gear, you can increase your speed and range while applying the same amount of force.

Switching bicycle lights on/off (Mini Remote only)

Before starting each journey, check that your bike lights are working correctly.

To switch the bicycle lights **on and off**, press the button to increase the assistance level/bicycle lights **(4)** for longer than 1 s.

Switching the push assistance on/off

The push assistance aids you when pushing your eBike. The speed of this function depends on the selected gear and can reach a maximum of **2.5 mph**.

- ▶ **The push assistance function must only be used when pushing the eBike.** There is a risk of injury if

the wheels of the eBike are not in contact with the ground while using the push assistance.

To **start** walk assistance, press the **(6)** button for more than 1 s and keep it pressed. The battery charge indicator **(13)** goes out and a white moving light in the direction of travel shows that it is ready.

To **activate** walk assistance, one of the following actions must occur within the next 10 s:

– Push the eBike forwards.
– Push the eBike backwards.
– Perform a sideways tilting movement with the eBike.

After activation, the motor begins to push and the continuously filling white bars change color to ice-blue.

If you release the **(6)** button, walk assistance is paused. You can reactivate walk assistance within 10 s by pressing the **(6)** button.

If you do not reactivate walk assistance within 10 s, walk assistance automatically switches off.

Walk assistance is always ended if:

– the rear wheel jams;
– the bicycle cannot move over ridges;
– a body part is blocking the bike crank;
– an obstacle continues to turn the crank;
– you start pedaling;
– the **(4)** button or on/off button **(12)** is pressed.

Walk assistance has a roll-away lock, which means that even after successfully using walk assistance, the drive system actively brakes backwards rolling for a few seconds and you cannot push the eBike backwards or can only do so with difficulty.

The push assistance function is subject to local regulations; the way it works may therefore differ from the description above. It can also be deactivated.

Establishing a smartphone connection

In order to be able to use the following eBike functions, a smartphone with the **eBike Flow** app is required.

Connection to the app occurs via a *Bluetooth*® connection.

1. Switch on the eBike system and do not start riding the eBike.
2. Begin *Bluetooth*® pairing by long pressing (> 3 s) the on/off button **(12)**. Release the on/off button **(12)** as soon as the lowest bar on the battery charge indicator **(13)** shows the pairing process by flashing blue.
3. Confirm the connection request in the **eBike Flow** app.

Activity tracking

In order to record activities, it is necessary to register and log into the **eBike Flow** app.

To record activities, you must consent to the storage of your location data in the app. Without this, your activities cannot be recorded in the app. For location data to be recorded, you must be logged in as the user.

<eBike Lock>

<eBike Lock> can be activated for all users via the **eBike Flow** app. A key to unlock the eBike is saved on the smartphone for this purpose.

<eBike Lock> is automatically active in the following cases:

– When switching off the eBike system via the operating unit
– When automatically switching off the eBike system
– By removing the on-board computer

The eBike is unlocked when the eBike system is switched on and the smartphone is connected with the eBike via *Bluetooth*®.

<eBike Lock> is connected to your **user account**.

Should you lose your smartphone, you can log in via another smartphone using the **eBike Flow** app, and unlock your user account and the eBike.

Warning! If you select a setting in the app that leads to disadvantages for the **<eBike Lock>** (e.g. deletion of your eBike or user account), then you will first be shown warning messages. **Please read through these thoroughly and adhere to the warnings that are issued (e.g. before deleting your eBike or user account).**

In order to be able to set up the **<eBike Lock>**, the following conditions must be fulfilled:

- The **eBike Flow** app has been installed.
- A user account has been created.
- No update is currently being carried out on the eBike.
- The eBike is connected to the smartphone via *Bluetooth*®.
- The eBike is stationary.
- The smartphone is connected to the Internet.
- The eBike rechargeable battery is sufficiently charged, and the charging cable is not connected.

You can set up **<eBike Lock>** in the **eBike Flow** app under the **settings** menu item.

You can deactivate the support of your drive unit with immediate effect by switching on **<eBike Lock>** in the **eBike Flow** app. Deactivation can only be canceled if your smartphone is nearby when switching on the eBike system. Your smartphone must have *Bluetooth*® switched on for this, and the **eBike Flow** app must be active in the background. The **eBike Flow** app does not have to be opened. If **<eBike Lock>** is activated, you can also use your eBike without support from the drive unit.

Compatibility

<eBike Lock> is compatible with these Bosch eBike product lines:

Drive unit	Product line
BDU374x	Performance Line CX
BDU33xx	Performance Line

How it works

In conjunction with **<eBike Lock>**, the smartphone works in a similar way to a key for the drive unit. **<eBike Lock>** becomes active when the eBike system is switched off. As long as the **<eBike Lock>** eBike lock is active after switching on, this is indicated on the **System Controller** operating unit by flashing white and on the display computer with a padlock symbol.

Note: <eBike Lock> alone does not provide adequate theft protection; it is simply a supplement to a mechanical lock. **<eBike Lock>** does not provide any form of mechanical lock for the eBike. Only the assistance from the drive unit is deactivated. As long as the smartphone is connected with the eBike via *Bluetooth*®, the drive unit is unlocked.

If you give third parties temporary or permanent access to your eBike or want to bring your eBike in for a service, deactivate **<eBike Lock>** in the **eBike Flow** app under the **settings** menu item. If you want to sell your eBike, also delete the eBike from your user account in the **eBike Flow** app under the **settings** menu item.

If the eBike system is switched off, the drive unit will emit a "Lock" sound (i.e. an audio signal that is played **once**) to indicate that the assistance from the drive unit is switched off.

Note: The audio signal will only be played if the system is switched on.

If the eBike system is switched on, the drive unit will emit two "Unlock" sounds (i.e. an audio signal that is played **twice**) to indicate that the assistance from the drive unit is enabled again.

The "Lock" sound helps you to recognize whether **<eBike Lock>** is activated on your eBike. The audio signal is activated by default, it can be deactivated in the **eBike Flow** app under the **settings** menu item by selecting the lock symbol below your eBike.

Note: If you are no longer able to set up or switch off **<eBike Lock>**, please contact your bicycle dealer.

Replacing eBike components and <eBike Lock>

Replacing the smartphone

1. Install the **eBike Flow** app on the new smartphone.
2. Log in using **the same** account with which you activated **<eBike Lock>**.
3. **<eBike Lock>** is displayed as set up in the **eBike Flow** app.

Replacing the drive unit

1. **<eBike Lock>** is displayed as deactivated in the **eBike Flow** app.

2. Activate **<eBike Lock>** by pushing the **<eBike Lock>** control unit to the right.
3. If you hand over your eBike to a bicycle dealer for maintenance, it is recommended to temporarily deactivate **<eBike Lock>** to avoid a false alarm.

Software updates

Software updates must be started manually in the **eBike Flow** app.

Software updates are transferred from the app to the control unit in the background as soon as it is connected to the app. During the update process, a green flashing on the battery charge indicator **(13)** shows the progress. The system is then restarted.

You can control the software updates via the **eBike Flow** app.

Connecting the System Controller to the Mini Remote

The **System Controller** and **Mini Remote** operating units are connected via *Bluetooth*®.

Switch on the eBike system and do not start riding the eBike.

If the **Mini Remote** operating unit has not already been connected to the **System Controller** operating unit by the bicycle dealer, proceed as follows:

1. First connect your smartphone to the **System Controller** operating unit via the **eBike Flow** app (see Establishing a smartphone connection).
2. In the **eBike Flow** app, select **<Connect the Mini Remote>**.
   You will be asked to switch the **System Controller** and **Mini Remote** to pairing mode.
3. **System Controller**: Start the pairing process by pressing and holding (3 s) the on/off button **(12)** until the lower bar on battery charge indicator **(13)** shows the pairing process by flashing blue.
4. **Mini Remote**: Start the pairing process by pressing any button until the pairing process is shown by the LED indicator light **(3)** flashing blue.
5. Follow the instructions in the **eBike Flow** app.

If pairing is successful, this is shown within 30 s on the **Mini Remote** operating unit by the LED indicator light **(3)** flashing green three times.

If the connection cannot be established, this is shown by the LED indicator lamp **(3)** flashing red three times. Repeat the connection process.

If you want to connect the**Mini Remote** operating unit to a **System Controller** on another eBike, the following steps must be carried out:

1. **Mini Remote**: Remove the battery on the **Mini Remote** operating unit and reinsert it.
2. Within the next 10 s, press and hold the decrease assistance **–**/walk assistance **(6)** button for 5 s. The pairing process is shown by the LED indicator light **(3)** flashing blue for 30 s.
3. **System Controller**: Start the pairing process by pressing and holding (3 s) the on/off button **(12)** until the lower bar on battery charge indicator **(13)** shows the pairing process by flashing blue.

If pairing is successful, this is shown within 30 s on the **Mini Remote** operating unit by the LED indicator light **(3)** flashing green three times.

If the connection cannot be established, this is shown by the LED indicator lamp **(3)** flashing red three times. Repeat the connection process.

Error messages

The control unit shows whether critical errors or less critical errors occur in the eBike system.

The error messages generated by the eBike system can be read via the **eBike Flow** app or by your bicycle retailer.

Via a link in the **eBike Flow** app, information about the error and support for rectifying the error can be displayed.

Less critical errors

Less critical errors are shown by the assistance level LED **(10)** flashing orange. Press the select button **(5)** on the **Mini Remote (1)** operating unit or the mode button **(14)** on the **System Controller (2)** operating

unit to confirm the error. The assistance level LED **(10)** once again continuously shows the color of the set assistance level.

You can use the following table to rectify the errors yourself if necessary. Otherwise, please contact your bicycle retailer.

Number	Troubleshooting
523005 **514001** **514002** **514003** **514006**	The indicated error numbers show that there is interference when the sensors detect the magnetic field. See whether you have lost the magnet while riding. If you are using a magnet sensor, check that the sensor and magnet have been properly installed. Make sure too that the cable to the sensor is not damaged. If you are using a rim magnet, make sure that you do not have any magnetic field interference in the vicinity of the drive unit.

Critical errors

Critical errors are shown by the assistance level LED **(10)** and the battery charge indicator **(13)** flashing red. If a critical fault occurs, follow the handling instructions on the following table.

Number	Handling instructions
660001 **660002**	Do not charge the battery and do not continue to use! Please contact your Bosch eBike specialist retailer.
890000	– Acknowledge the error code. – Restart the system. If the problem persists: – Acknowledge the error code. – Perform the software update. – Restart the system. If the problem persists: – Please contact your Bosch eBike specialist retailer.

Maintenance and Service

Maintenance and Cleaning

The operating unit must not be cleaned with pressurized water.

Keep the operating unit clean. Dirt can cause faulty brightness detection.

Clean your operating unit using a soft cloth dampened only with water. Do not use cleaning products of any kind.

- ▶ **Only have repairs performed by a certified bicycle dealer.**

After-sales service and advice on using products

If you have any questions about the eBike system and its components, contact an authorized bicycle dealer.

For contact details of authorized bike dealerships, please visit www.bosch-ebike.com.

Battery Recycling Program

The drive unit, on-board computer incl. operating unit, battery, speed sensor, accessories and packaging should be disposed of in an environmentally correct manner.

Do not dispose of eBikes and their components with household waste.

You may recycle your Bosch battery pack by calling 1.800.822.8837.

Robert Bosch GmbH
72757 Reutlingen
Germany

www.bosch-ebike.com

0 275 U07 3RC (2022.03) T / 52

Owner’s Manual – The Bosch Drive System Display Mount

BDS3210 | BDS3250 | BDS3620 | BDS3630



en Original operating instructions

This manual contains important safety, performance and service information. Read and understand it along with the information provided to you by your bicycle manufacturer before using the product, and keep it for reference.

Table of contents

Introduction 2
About Warnings 2
General Warnings 2
Using your Manual 3
Operating your Bosch Display Mount 4
Safety instructions 4
Product description and specifications 5
Fitting 6
Maintenance and cleaning 8

Introduction

About Warnings

This manual contains many **DANGER**, **WARNING**, and **CAUTION** indicators concerning the consequences of failure to use, assemble, maintain, store, inspect and dispose of a Bosch-equipped eBike in a safe manner.

– The combination of the safety alert symbol and the word **DANGER** indicates a hazardous situation that, if not avoided, will result in death or serious injury.
– The combination of the safety alert symbol and the word **WARNING** indicates a hazardous situation that, if not avoided, could result in death or serious injury.
– The combination of the safety alert symbol and the word **CAUTION** indicates a hazardous situation that, if not avoided, could result in minor or moderate injury.

General Warnings



Read all safety warnings and all instructions. Failure to follow the warnings and instructions may result in death or serious injury.

Save all safety warnings and instructions for future reference.

The term **battery pack** used in these operating instructions refers to all original Bosch eBike battery packs.

⚠ WARNING

- ▶ **This manual contains important safety, performance and service information.** Read it before you take the first ride on your new bicycle, and keep it for reference. The manual can also be found online at www.bosch-ebike.com.
- ▶ **This manual is intended to be read together with the separate user manual provided with your bicycle.** Be sure to read all provided documents including labels on the product before your first ride.
- ▶ **Read ALL accompanying manuals before riding the bike for the first time.** Your Bosch Drive System comes with additional manuals and documents provided by the manufacturer of the bicycle and other components. Failure to read and understand safety information can result in death or serious injury.
- ▶ **Take responsibility for your own SAFETY.** If you have any questions or do not understand something, consult with your dealer or the bicycle or component manufacturer.
- ▶ **Some eBike accessories may present a choking hazard to small children.** Keep these accessories away from children.

⚠ CAUTION

- ▶ **The Bosch Drive System adds weight to your bicycle which you may not be used to lift.** Avoid injury, use proper lifting techniques.

Using your Manual

In addition to the functions outlined here, changes to software relating to troubleshooting and functional modifications may be introduced at any time.

Graphics

The bicycle shown in this manual may differ slightly from your bicycle, but will be similar enough to help you understand our instructions.

RIGHT-HAND and LEFT-HAND sides are determined by facing in the direction the bicycle will travel when going forward. When you see a broken line (------), the item referred to is hidden from view.

Operating your Bosch Display Mount

Safety instructions



Read all the safety information and instructions. Failure to observe the safety information and follow instructions may result in electric shock, fire and/or serious injury.

Save all safety warnings and instructions for future reference.

- ▸ **The contact surfaces of the display holder may become very hot (> 140 °F). Allow the contact surfaces to adjust to the ambient temperature before you touch them.** This is particularly important when using a SmartphoneGrip.
- ▸ **Keep swallowable small parts away from small children.** There is a risk of serious injury.
- ▸ **Never short-circuit the pins.** The display holder may be irreparably damaged and must then be replaced.
- ▸ **Ensure that the contacts are free of dirt.** By doing this, you prevent malfunctions or damage.
- ▸ **After a fall, check the display holder for sharp edges.** Replace it if required.
- ▸ **Do not stand your bicycle upside down on its saddle and handlebars if the on-board computer or its holder protrude from the handlebars.** This may irreparably damage the on-board computer or the holder. Also remove the on-board computer before placing the bicycle on a wall mount to ensure that the on-board computer does not fall off or become damaged.
- ▸ **Observe all national regulations which set out the approved use of eBikes.**
- ▸ **Read and observe the safety warnings and instructions in all operating instructions of the eBike system and your eBike.**

Product description and specifications

Product Features Display Mount

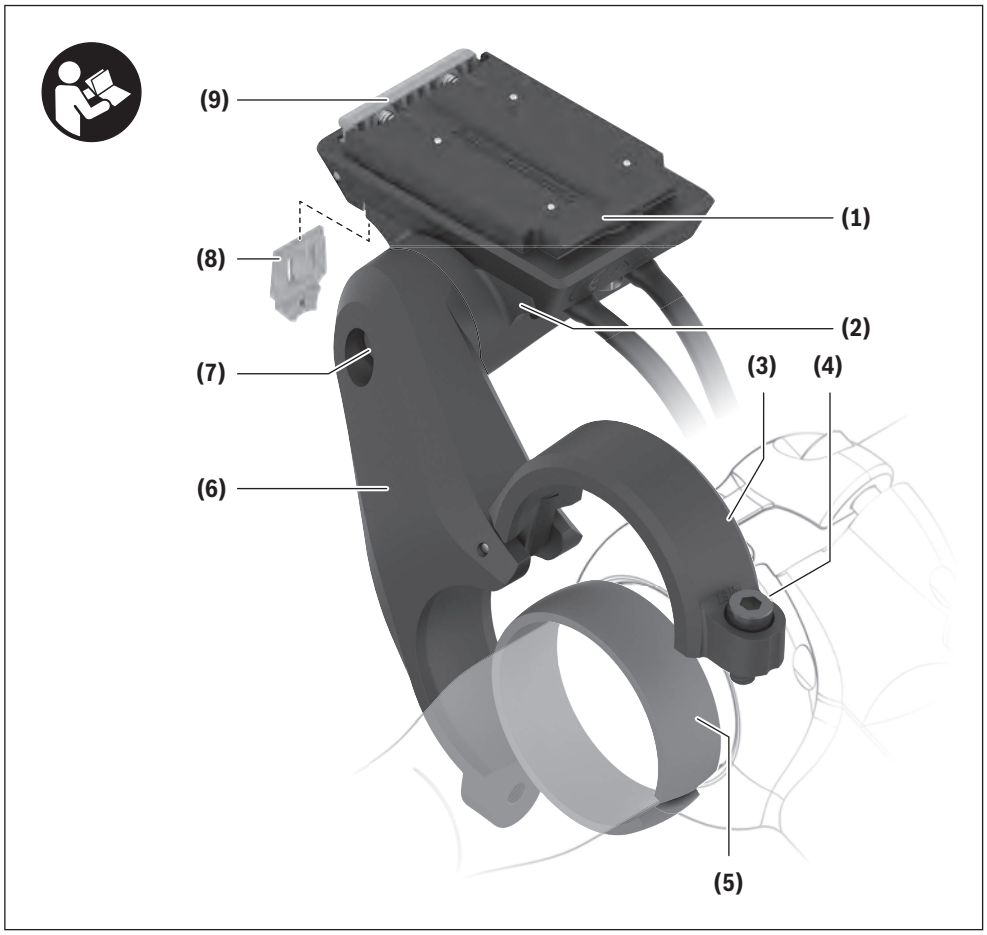

(1) Display mount
(2) Adapter tray
(3) Clamp for holder
(4) Clamp screw
(5) Round rubber spacer
(6) 1-arm socket
(7) Screw for adjusting tilt
(8) Removal blocker
(9) Snap-in hook
(10) Connection cables
(11) Fastening screws for display mount

The display mount **(1)** can also be embedded in the bicycle design.

Intended use

The display holder is intended to establish the mechanical and electrical connection to a display or onboard computer.

Only original Bosch eBike components can be connected to the display holder.

A display holder is not required for an eBike system to function.

Technical data

Display holder		
Product code		BDS3210 BDS3250 BDS3620 BDS3630
Output voltage	V	4.75 to 5.4
Output current, max.	A	1.5
Operating temperature	°F	23 to 104
Storage temperature	°F	50 to 104
Protection rating		IP54

Fitting

Installation positions (see figure A)

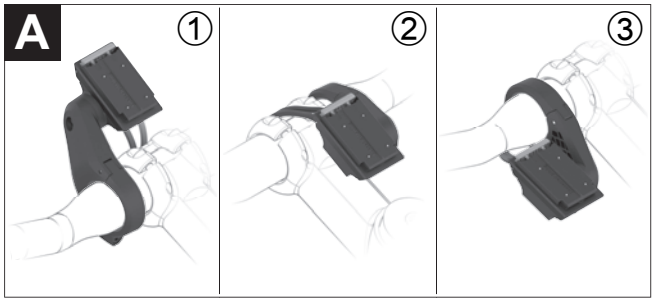

The 1-arm socket can be mounted at three different positions on the handlebars:

– In front of the handlebars ①
– Over the stem ②
– In the triangle between the stem and handlebar ③

Note: In order to ensure clean cable routing, the appropriate display mount must be used for each of the three different positions: The BDS3210 display mount for in front of the handlebars (electrical connections at the rear); the BDS3250 display mount for over the stem or in the triangle between the stem and handlebar (electrical connections at the front).

If you want to change the installation position and you have the correct display mount **(1)**, you must first remove the 1-arm socket **(6)** and re-mount it afterwards.

Note: Please be aware that there are two different handlebar diameters (31.8 mm and 35 mm). Your bicycle retailer will help you to select the correct components.

Mounting the display mount (see figure B)

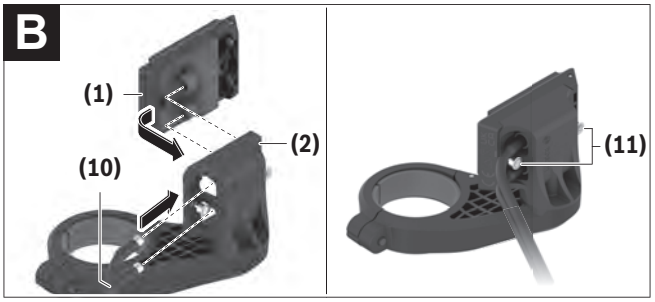

(1) Display mount
(2) Adapter tray
(10) Connection cables
(11) Fastening screw for display mount

Insert the display mount **(1)** into the adapter tray **(2)**. Ensure that it is in the required installation position. Secure the display mount **(1)** from below using the screws **(11)**. When doing so, be aware of the torque specified on the adapter tray **(2)**.

Connect the connection cables that come out of the drive unit and the operating unit. It does not matter which cable is connected to which connection for the functions to work. When connecting the cables, ensure that the markings on the connector and on the cable match.

Securing on the handlebars (see figure C)

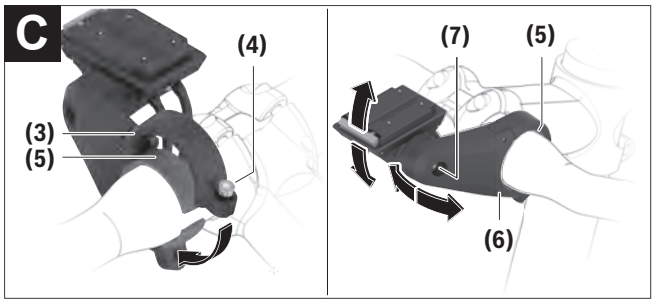

(3) Clamp for holder

(4) Clamp screw

(5) Round rubber spacer

(6) 1-arm socket

(7) Screw for adjusting tilt

Note: The display holder must only be secured in the cylindrical area of the handlebars and not in the tapered area. To clamp a display in the center, the handlebars must have a cylindrical area of at least 90 mm in width.

Open the clamp and bring the 1-arm socket **(6)**, together with the round rubber spacer **(5)**, into the required position. Gently tighten the clamp screw **(4)** so that the 1-arm socket **(6)** can still move.

Adjust the tilt for the display mount by loosening and tightening the screw **(7)**. Preferably adjust the tilt without the display or on-board computer.

In the connection between the 1-arm socket **(6)** and the adapter tray, there are interlocking teeth, which means that it is only possible to align the adapter tray in predefined positions. Before tightening the screw **(7)**, make sure that the teeth engage in one another correctly. In addition, be aware of the torque specified on the 1-arm socket **(6)**.

Bring the 1-arm socket **(6)** into its final position and tighten the clamp screw **(4)**. Be aware of the torque specified on the 1-arm socket **(6)** here too.

Thanks to the round rubber spacer **(5)**, it is possible to move the 1-arm socket **(6)** in all directions.

Removal blocker

A device attached to the display holder can be secured using the removal blocker **(8)**. Usage is described in the operating instructions for the respective device.

Maintenance and cleaning

The display holder must not be cleaned with pressurized water.

Use a soft cloth dampened only with water for cleaning. Do not use cleaning products of any kind.

- ▸ **Only have repairs performed by a certified bicycle dealer.**

After-sales service and advice on using products

If you have any questions about the eBike system and its components, contact an authorized bicycle dealer.

For contact details of authorized bike dealerships, please visit www.bosch-ebike.com.

Disposal

Please return Bosch eBike components that are no longer usable to an authorized bicycle dealer.

Do not dispose of eBikes and their components with household waste.

Robert Bosch GmbH
72757 Reutlingen
Germany

www.bosch-ebike.com

0 275 U07 3S1 (2021.06) T / 26

Owner’s Manual – The Bosch Drive System
SmartphoneGrip

BSP3200



en Original operating instructions

This manual contains important safety, performance and service information. Read and understand it along with the information provided to you by your bicycle manufacturer before using the product, and keep it for reference.

Table of Contents

Introduction 2
About Warnings 2
General Warnings 2
Using your Manual 3
Operating your Bosch Drive System 4
Safety Instructions 4
Intended Use 6
SmartphoneGrip Product Features 6
Technical Data 7
Assembly 7
Operation 10
Maintenance and servicing 11
Maintenance and cleaning 11
Transport 11
After-sales service and advice on using products 11
Battery Recycling Program 11

Introduction

About Warnings

This manual contains many **DANGER**, **WARNING**, and **CAUTION** indicators concerning the consequences of failure to use, assemble, maintain, store, inspect and dispose of a Bosch-equipped eBike in a safe manner.

– The combination of the safety alert symbol and the word **DANGER** indicates a hazardous situation that, if not avoided, will result in death or serious injury.
– The combination of the safety alert symbol and the word **WARNING** indicates a hazardous situation that, if not avoided, could result in death or serious injury.
– The combination of the safety alert symbol and the word **CAUTION** indicates a hazardous situation that, if not avoided, could result in minor or moderate injury.

General Warnings



Read all safety warnings and all instructions. Failure to follow the warnings and instructions may result in death or serious injury.

Save all safety warnings and instructions for future reference.

The term **battery pack** used in these operating instructions refers to all original Bosch eBike battery packs.

▶ **Read ALL accompanying manuals before riding the bike for the first time.** Your Bosch Drive System comes with additional manuals and documents provided by the manufacturer of the bicycle and other components. Failure to read and understand safety information can result in death or serious injury.

⚠ WARNING

▶ **This manual contains important safety, performance and service information.** Read it before you take the first ride on your new bicycle, and keep it for reference. The manual can also be found online at www.bosch-ebike.com.

▶ **This manual is intended to be read together with the separate user manual provided with your bicycle.** Be sure to read all provided documents including labels on the product before your first ride.

▶ **Take responsibility for your own SAFETY.** If you have any questions or do not understand something, consult with your dealer or the bicycle or component manufacturer.

▶ **Some eBike accessories may present a choking hazard to small children.** Keep these accessories away from children.

⚠ CAUTION

▶ **The Bosch Drive System adds weight to your bicycle which you may not be used to lift.** Avoid injury, use proper lifting techniques.

Using your Manual

In addition to the functions outlined here, changes to software relating to troubleshooting and functional modifications may be introduced at any time.

Graphics

The bicycle shown in this manual may differ slightly from your bicycle, but will be similar enough to help you understand our instructions.

RIGHT-HAND and LEFT-HAND sides are determined by facing in the direction the bicycle will travel when going forward. When you see a broken line (------), the item referred to is hidden from view.

Operating your Bosch Drive System

Safety Instructions



Read all the safety information and instructions. Failure to observe the safety information and follow instructions may result in electric shock, fire and/or serious injury.

Save all safety warnings and instructions for future reference.

- ▸ **Read and observe the safety warnings and instructions in all operating instructions of the eBike system and your eBike.**
- ▸ **Do not allow your attention to be diverted from surrounding traffic when using Bosch eBike components and always ride with both hands on the handlebars. Always observe the applicable legal provisions in your country for the permitted use of your bicycle on public streets. In particular, note that it is prohibited to pick up or hold your smartphone in your hand while cycling on public streets.**
- ▸ **Set the display brightness such that you can adequately see important information like speed or warning symbols.** An incorrectly set display brightness can result in dangerous situations.
- ▸ **The contact surfaces of the display holder may become very hot (> 140 °F). Allow the contact surfaces to adjust to the ambient temperature before you touch them.** This is particularly important when using a SmartphoneGrip.
- ▸ **Consult a doctor before using fitness app programs.** Fitness apps may cause people to overexert themselves physically.
- ▸ **Always observe local restrictions for using electronic devices.**
- ▸ **Avoid using the device in close proximity to your body over an extended period of time.**
- ▸ **Do not stand your bicycle upside down on its saddle and handlebars if the SmartphoneGrip or its holder protrude from the handlebars.** This may irreparably damage the SmartphoneGrip or the holder.
- ▸ **Do not use the SmartphoneGrip as a handle.** Lifting the eBike up by the SmartphoneGrip can cause irreparable damage to the SmartphoneGrip.
- ▸ **Do not open the SmartphoneGrip.** Opening the SmartphoneGrip can result in irreparable damage and void your warranty.
- ▸ **Caution!** Using the SmartphoneGrip with *Bluetooth*® and/or Wi-Fi can interfere with the operation of other devices and systems, including airplanes and medical devices (e.g. pacemakers, hearing aids). Similarly, the possibility that this may cause damage to humans and animals in the immediate vicinity cannot be completely excluded. Do not use the SmartphoneGrip with *Bluetooth*® in the vicinity of medical devices, service stations, chemical plants, blasting areas or other areas where there is a risk of explosion. Do not use the SmartphoneGrip with *Bluetooth*® in airplanes. Avoid using the device in close proximity to your body over an extended period of time.
- ▸ **Do not enter information or make selections while riding.** Interacting with the display unit while riding can lead to accidents causing serious injury or death. You must observe road and traffic conditions, and comply with traffic laws at all times.
- ▸ **Using your mobile device while operating an eBike may be distracting. Distracted driving is a serious safety concern and can lead to accidents causing serious injury or death. In order to prevent distracted driving, most devices come equipped with a “Do Not Disturb” mode. The “Do Not Disturb” mode should be used while operating an eBike.** Please consult your device-specific instructions for more information. You, as the eBike operator, are fully responsible for ensuring that you

pay attention to road conditions and comply with traffic laws at all times.

- ▶ Please note that certain State or local laws may require that class III eBikes must be equipped with a functioning speedometer that displays speed in miles per hour. Riders must be aware of any and all applicable rules and regulations related to the operation or use of class III eBikes in any applicable jurisdictions before operating or otherwise using this product.
- ▶ **Choose the USB charging cable length appropriately.** USB charging cable length must not be long enough to catch in handlebar or front wheel. This is important to prevent personal injury.

NOTICE: This device complies with part 15 of the FCC Rules. Operation is subject to the following two conditions:

1. This device must not cause harmful interference, and
2. this device must accept any interference received, including interference that may cause undesired operation.

NOTICE: Changes or modifications made to this equipment not expressly approved by the Robert Bosch GmbH may void the FCC authorization to operate this equipment.

NOTE: This equipment has been tested and found to comply with the limits for a Class B digital device, pursuant to Part 15 of the FCC Rules. These limits are designed to provide reasonable protection against harmful interference in a residential installation. This equipment generates, uses and can radiate radio frequency energy and, if not installed and used in accordance with the instructions, may cause harmful interference to radio communications. However, there is no guarantee that interference will not occur in a particular installation. If this equipment does cause harmful interference to radio or television reception, which can be determined by turning the equipment off and on, the user is encouraged to try to correct the interference by one or more of the following measures:

- – Reorient or relocate the receiving antenna.
- – Increase the separation between the equipment and receiver.
- – Connect the equipment into an outlet on a circuit different from that to which the receiver is connected.
- – Consult the dealer or an experienced radio/TV technician for help.

Radiofrequency radiation exposure Information:
The radiated output power of the device is far below the FCC radio frequency exposure limits. Nevertheless, the device shall be used in such a manner that the potential for human contact during normal operation is minimized.

This equipment complies with FCC radiation exposure limits set forth for an uncontrolled environment. This equipment should be installed and operated with minimum distance of 20 cm between the radiator and your body. This transmitter must not be co-located or operating in conjunction with any other antenna or transmitter.

ISED Notice (Canada)

This device contains licence-exempt transmitter(s)/ receiver(s) that comply with Innovation, Science and Economic Development Canada's licence-exempt RSS(s). Operation is subject to the following two conditions:

1. this device may not cause interference, and
2. this device must accept any interference, including interference that may cause undesired operation of the device.

This equipment complies with Canada radiation exposure limits set forth for an uncontrolled environment. This equipment should be installed and operated with minimum distance of 20 cm between the radiator and your body. This transmitter must not be co-located or operating in conjunction with any other antenna or transmitter.

Intended Use

The Bosch SmartphoneGrip is designed to hold and charge a smartphone on the handlebars of a Bosch eBike system.

In addition to the functions outlined here, changes to software relating to troubleshooting and functional modifications may be introduced at any time.

The SmartphoneGrip is suitable for cycling on reinforced paths without jumps and with few ledges (< 15 cm) at average speeds of between 9.32 and 15.53 mph, for example on asphalt roads, country paths, paths reinforced with gravel or sand, and reinforced woodland paths.

If used incorrectly, there is a danger that the smartphone may detach from the holder, fall down and therefore become damaged. There is also a considerable risk of an accident if the smartphone falls out.

SmartphoneGrip Product Features

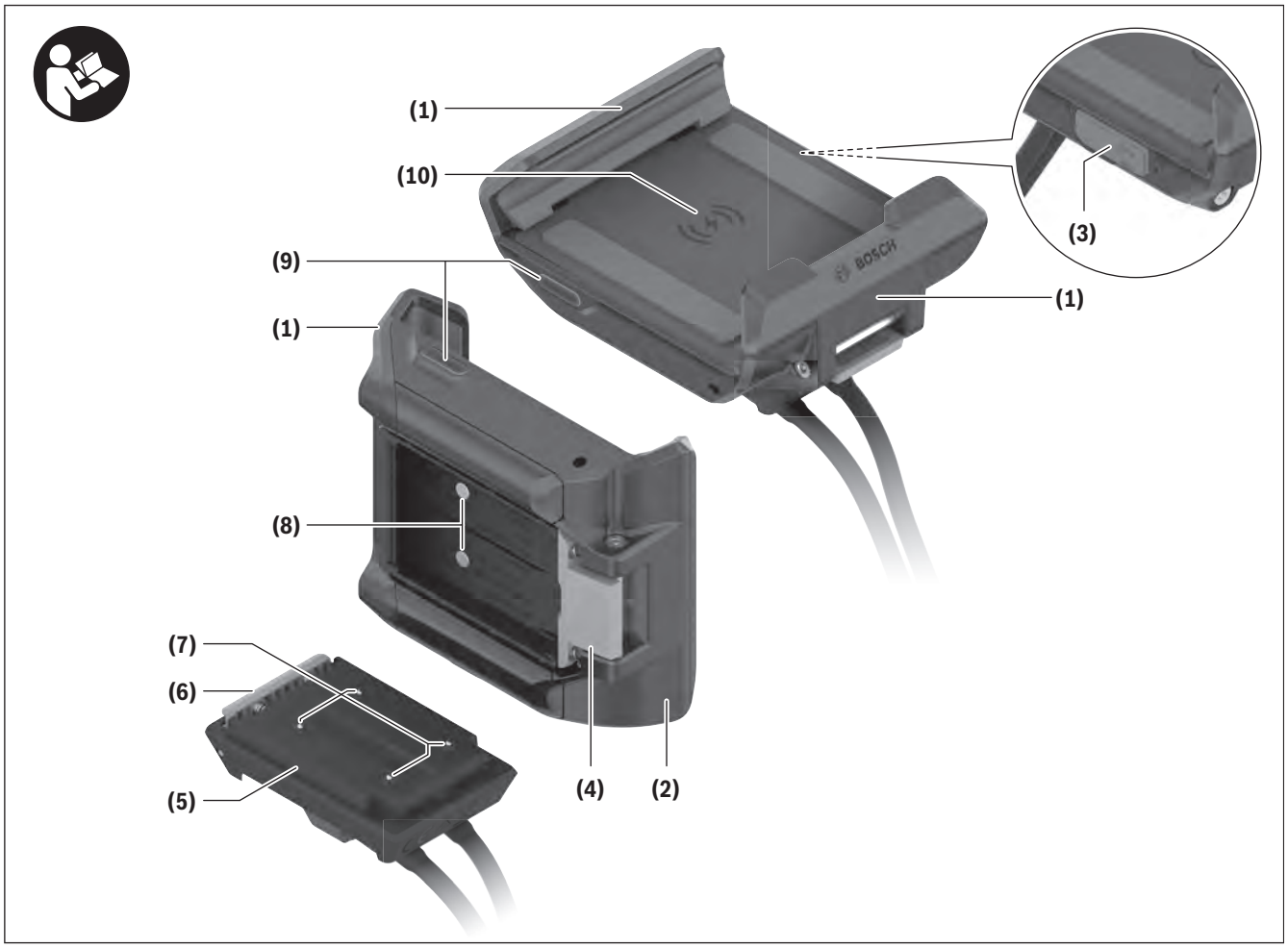

All illustrations of bike parts except for the drive unit, SmartphoneGrip including operating unit, speed sensor and the corresponding holders are schematic and may differ on your eBike.

(1) Front retraining bracket, movable
(2) Rear retaining bracket, fixed
(3) USB port with USB cap
(4) Release mechanism

(5) SmartphoneGrip mount
(6) Snap-in hook
(7) Socket contacts
(8) SmartphoneGrip contacts
(9) Status LED
(10) Inductive charging coil
(11) Display mount fastening screw
(12) Removal blocker
(13) Keypad lock
(14) Hex key[a)]
(15) Smartphone[a)]
(16) Adapter tray

a) Not included in the scope of delivery

Technical Data

SmartphoneGrip		
Product code		BSP3200
Charging capacity via USB port	W	5 W (1 A at 5 V)
Inductive charging capacity	W	7.5 W (1.5 A at 5 V) Efficiency > 67 %
Operating temperature	°F	23 to 104
Storage temperature	°F	50 to 104
Protection rating		IP54
Weight, approx.	lb	0.2

Assembly

SmartphoneGrip Assembly

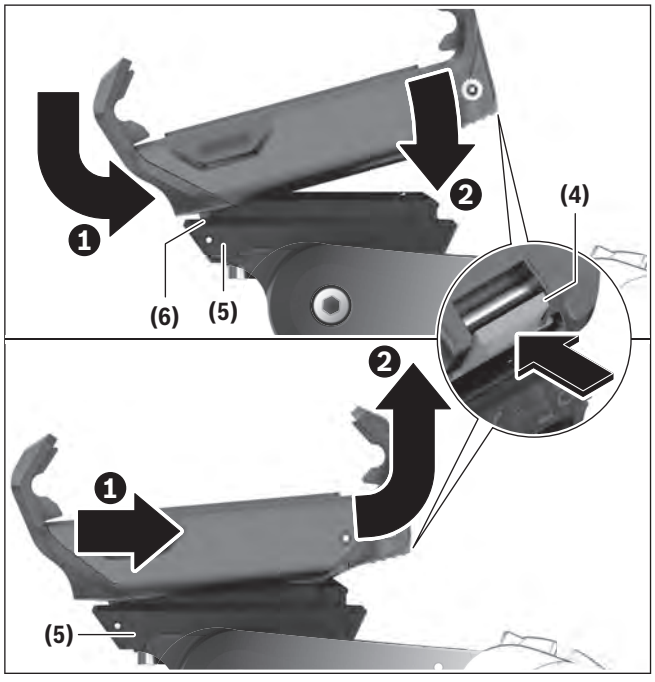

Press and hold the release mechanism **(4)** to **position** the SmartphoneGrip. Place the upper edge of the SmartphoneGrip next to the snap-in hook **(6)** of the display holder **(5)** ❶. Pull the SmartphoneGrip towards you and push the SmartphoneGrip onto the display holder ❷. Let go of the release mechanism **(4)**.

Press the release mechanism **(4)** while pulling it towards you ❶ to **remove** the SmartphoneGrip. Lift off the SmartphoneGrip and release the release mechanism **(4)** ❷.

Attaching the Removal Blocker

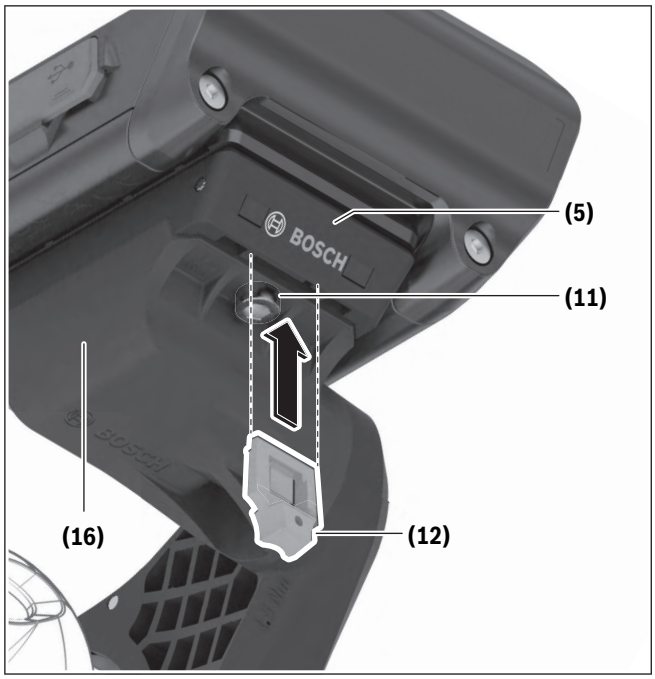

Insert the locking plate **(12)** into the adapter shell **(16)** from below until you hear the locking plate **(12)** click into place.

Together with the keypad lock **(13)**, this prevents the SmartphoneGrip from being quickly and easily removed.

Note: The locking plate **(12)** is not an anti-theft device.

To remove the removal blocker **(12)**, loosen the two fastening screws **(11)**.

Smartphone Assembly

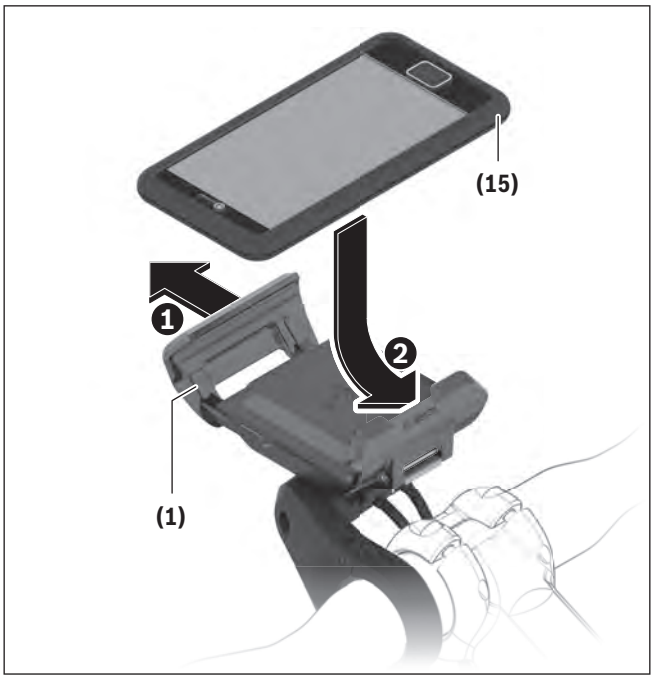

The SmartphoneGrip can hold smartphones in the following sizes:

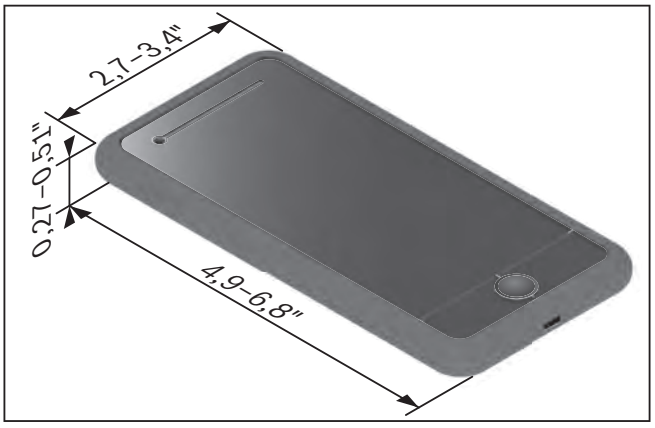

The specified dimensions include any phone cases. Smartphones with **folio and carrying cases** must not be used.

The total weight must not exceed 0.608 lbs.

Insert your smartphone **(15)** with the long side of the phone positioned at the center against the movable retaining bracket **(1)**. Press the smartphone **(15)** against the movable retaining bracket **(1)** with both hands ❶ and place your smartphone **(15)** in the SmartphoneGrip ❷.

- ▶ Be careful not to pinch your fingers between the movable retaining bracket and the SmartphoneGrip when inserting your smartphone.

Once you have inserted your smartphone, check that the smartphone cannot come into contact with any hard parts on the bike even in case of vibrations, as this could cause lasting damage to the smartphone.

Keypad Lock Assembly

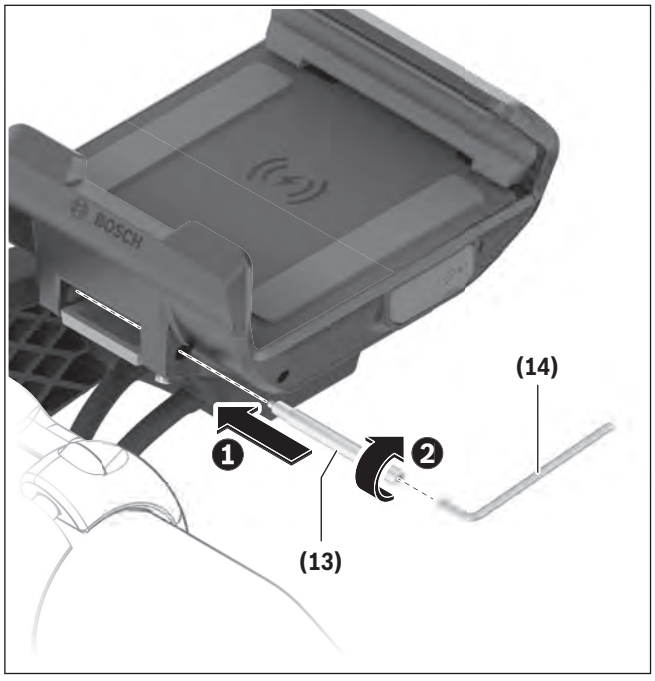

The keypad lock **(13)** supplied, together with the removal blocker **(12)**, prevents the SmartphoneGrip from being quickly and easily removed by blocking the release mechanism **(4)**.

To **insert** the keypad lock **(13)**, slide the keypad lock **(13)** into the provided opening ❶ and carefully screw it into place with a hex key (1.5 mm) **(14)** ❷.

Note: The keypad lock is not an anti-theft device. The keypad lock prevents the SmartphoneGrip from being quickly removed from the holder. The keypad lock does not affect the smartphone in any way.

Note: Never leave your smartphone unattended in the SmartphoneGrip!

To **remove** the keypad lock **(13)**, unscrew the securing screw with a hex key (1.5 mm) **(14)** and remove the keypad lock **(13)**.

Operation

Start-up

Put the smartphone in the SmartphoneGrip.

Load the **eBike Flow** app to show your ride data.

Depending on the operating system of the smartphone, the **eBike Flow** app can be downloaded free of charge from the Apple App Store or Google Play Store.

Scan the code with your smartphone to download the **eBike Flow** app.

Charging the Smartphone

While the smartphone is in the SmartphoneGrip, it can be charged at the same time as displaying riding data. If your smartphone has an inductive charging function, you can charge the smartphone without needing a cable.

Inductive Charging

The charging process starts automatically when you place a smartphone with an inductive charging function in the SmartphoneGrip. The status LED **(9)** lights up yellow. When the smartphone is fully charged, the status LED **(9)** will light up green permanently.

The charging voltage is switched off when you remove the smartphone from the holder.

Charging via USB

If your smartphone does not have an inductive charging function, you can charge your smartphone via the USB port **(3)**. To do so, open the USB cap and connect a separate USB cable (not included in the scope of delivery) to the Micro-A/B USB port.

Pay attention to the type of plug required for your smartphone when purchasing the USB cable.

Status Indicators

The status LED **(9)** indicates the following statuses with different colors and lighting patterns.

Status	Behavior
Charging via USB	LED lights up blue.
Inductive charging starts	LED flashes yellow 3 times.
Inductive Charging	LED lights up yellow.
Fully charged	LED lights up green.
Error message	LED flashes red.

The following alarm states are detected and will lead to the inductive charging process being interrupted:

- Detection of foreign objects, e.g. coins, keys and other metallic objects
- Temperature alarm
  If the SmartphoneGrip is outside of the operating temperature range, the status LED **(9)** will light up red and the charging process is interrupted. The charging process will resume as soon as the SmartphoneGrip is back within the operating temperature range.
- Overvoltage alarm at voltages above 6 V
- Undervoltage alarm at voltages below 4.2 V

Maintenance and servicing

Maintenance and cleaning

Use a soft cloth dampened only with water for cleaning. Do not use cleaning products of any kind.

▶ **Only have repairs performed by a certified bicycle dealer.**

Do not clean any of the components with pressurized water.

Transport

▶ **If you transport your eBike attached to the outside of your car, e.g. on a bike rack, remove the SmartphoneGrip and the eBike battery to avoid damaging them.**

After-sales service and advice on using products

If you have any questions about the eBike system and its components, contact an authorized bicycle dealer.

For contact details of authorized bike dealerships, please visit www.bosch-ebike.com.

Battery Recycling Program



The drive unit, on-board computer incl. operating unit, battery, speed sensor, accessories and packaging should be disposed of in an environmentally correct manner.

Do not dispose of eBikes and their components with household waste.



You may recycle your Bosch battery pack by calling 1.800.822.8837.

Robert Bosch GmbH
72757 Reutlingen
Germany

www.bosch-ebike.com

0 275 U08 3SG (2022.03) T / 38

Owner’s Manual – The Bosch Drive System
ConnectModule

BCM3100



en Original operating instructions

This manual contains important safety, performance and service information. Read and understand it along with the information provided to you by your bicycle manufacturer before using the product, and keep it for reference.

Introduction

About Warnings

This manual contains many **DANGER**, **WARNING**, and **CAUTION** indicators concerning the consequences of failure to use, assemble, maintain, store, inspect and dispose of a Bosch-equipped eBike in a safe manner.

– The combination of the safety alert symbol and the word **DANGER** indicates a hazardous situation that, if not avoided, will result in death or serious injury.
– The combination of the safety alert symbol and the word **WARNING** indicates a hazardous situation that, if not avoided, could result in death or serious injury.
– The combination of the safety alert symbol and the word **CAUTION** indicates a hazardous situation that, if not avoided, could result in minor or moderate injury.

General Warnings



Read all safety warnings and all instructions. Failure to follow the warnings and instructions may result in death or serious injury.

Save all safety warnings and instructions for future reference.

The term **battery pack** used in these operating instructions refers to all original Bosch eBike battery packs.

▶ **Read ALL accompanying manuals before riding the bike for the first time.** Your Bosch Drive System comes with additional manuals and documents provided by the manufacturer of the bicycle and other components. Failure to read and understand safety information can result in death or serious injury.

⚠ WARNING

▶ **This manual contains important safety, performance and service information.** Read it before you take the first ride on your new bicycle, and keep it for reference. The manual can also be found online at www.bosch-ebike.com.

▶ **This manual is intended to be read together with the separate user manual provided with your bicycle.** Be sure to read all provided documents including labels on the product before your first ride.

▶ **Take responsibility for your own SAFETY.** If you have any questions or do not understand something, consult with your dealer or the bicycle or component manufacturer.

▶ **Some eBike accessories may present a choking hazard to small children.** Keep these accessories away from children.

⚠ CAUTION

▶ **The Bosch Drive System adds weight to your bicycle which you may not be used to lift.** Avoid injury, use proper lifting techniques.

Using your Manual

In addition to the functions outlined here, changes to software relating to troubleshooting and functional modifications may be introduced at any time.

Graphics

The bicycle shown in this manual may differ slightly from your bicycle, but will be similar enough to help you understand our instructions.

RIGHT-HAND and LEFT-HAND sides are determined by facing in the direction the bicycle will travel when going forward. When you see a broken line (------), the item referred to is hidden from view.

Operating your Bosch Drive System

Safety Instructions



Read all the safety and general instructions. Failure to follow the warnings and instructions may result in electric shock, fire and/or serious injury.

- ▶ **Read and observe the safety warnings and instructions in all operating instructions of the eBike system and your eBike.**
- ▶ **Only have the ConnectModule installed and repaired by a certified dealer.** This requires specialist expertise. If incorrectly installed, the ConnectModule, and therefore eBike, may no longer operate as required by law.
- ▶ **The ConnectModule features a wireless interface. There may therefore be operating restrictions in certain locations, e.g. in airplanes or hospitals.** Please also see the additional instructions under (see "Transport", page English – 6).
- ▶ Please note that certain State or local laws may require that class III eBikes must be equipped with a functioning speedometer that displays speed in miles per hour. Riders must be aware of any and all applicable rules and regulations related to the operation or use of class III eBikes in any applicable jurisdictions before operating or otherwise using this product.

NOTICE: This device complies with part 15 of the FCC Rules. Operation is subject to the following two conditions:

1. This device must not cause harmful interference, and
2. this device must accept any interference received, including interference that may cause undesired operation.

NOTICE: Changes or modifications made to this equipment not expressly approved by the Robert Bosch GmbH may void the FCC authorization to operate this equipment.

NOTE: This equipment has been tested and found to comply with the limits for a Class B digital device, pursuant to Part 15 of the FCC Rules. These limits are designed to provide reasonable protection against harmful interference in a residential installation. This equipment generates, uses and can radiate radio frequency energy and, if not installed and used in accordance with the instructions, may cause harmful interference to radio communications. However, there is no guarantee that interference will not occur in a particular installation. If this equipment does cause harmful interference to radio or television reception, which can be determined by turning the equipment off and on, the user is encouraged to try to correct the interference by one or more of the following measures:

- Reorient or relocate the receiving antenna.
- Increase the separation between the equipment and receiver.
- Connect the equipment into an outlet on a circuit different from that to which the receiver is connected.
- Consult the dealer or an experienced radio/TV technician for help.

Radiofrequency radiation exposure Information:

The device complies with FCC radiation exposure limits set forth for an uncontrolled environment. This equipment has been tested for compliance with SAR limits, the highest reported SAR value is 1.45 W/kg for Body-worn at 0 mm separation, and 0.62 W/kg for extremity at 0 mm separation.

ISED Notice (Canada)

This device contains licence-exempt transmitter(s)/ receiver(s) that comply with Innovation, Science and Economic Development Canada's licence-exempt RSS(s). Operation is subject to the following two conditions:

1. this device may not cause interference, and

2. this device must accept any interference, including interference that may cause undesired operation of the device.

This device has been tested for compliance with SAR limits, the highest reported SAR value is 1.45 W/kg for Body-worn at 0 mm separation, and 0.62 W/kg for extremity at 0 mm separation.

Intended Use

The ConnectModule can only be used with the related features from the app **eBike Flow**. Consequently, to use ConnectModule, you must have a mobile device on which the app **eBike Flow** is downloaded and installed.

The ConnectModule is intended solely for use with an eBike, specifically for tracking eBikes in the event of theft.

Technical Data

ConnectModule		
Product code		BCM3100
Internal battery	V mAh	4.35 650
External battery connection	V	12
Frequency band LTE Cat-M1	MHz	B1 (2100 MHz) B2 (1900 MHz) B3 (1800 MHz) B4 (1700 MHz) B5 (850 MHz) B8 (900 MHz) B12 (700 MHz) B13 (700 MHz) B20 (800 MHz) B28 (700 MHz)
Transmission power	dBm	21
Weight, approx.	lb	0.1
Operating temperature	°F	23 to 104
Storage temperature	°F	50 to 104
Protection rating		IP54

Operation

The ConnectModule requires a working GPS and mobile data connection in order to function.

The ConnectModule incorporates movement sensors, a global satellite navigation system and mobile communications. These enable the ConnectModule to identify suspicious movements of the eBike, establish the location of the eBike and sound an alarm on the bicycle itself.

Position and movement data is displayed to the owner of the eBike through the app **eBike Flow**.

The ConnectModule provides additional services, such as **<eBike Alarm>**, which is available to the end customer in the app **eBike Flow**. More detailed information about the individual services of the app **eBike Flow** can be found in the app itself.

Charges apply for the use of some services. Details can be found in the app **eBike Flow**.

Start-up

As soon as a ConnectModule is installed on an eBike, it can be activated through the app **eBike Flow**. This is only necessary once.

Services such as the **<eBike Alarm>** can be activated and used through the app **eBike Flow**.



Depending on the operating system of the smartphone, the **eBike Flow** app can be downloaded free of charge from the Apple App Store or Google Play Store.

Scan the code with your smartphone to download the **eBike Flow** app.

The services of the ConnectModule can be deactivated at any time through the app **eBike Flow**. Provided the user has a valid activation, they will be able to reactivate all services.

There is no means of deactivating the ConnectModule itself.

Switching on/off

The ConnectModule does not need to be switched on or off separately.

Provided the ConnectModule has a power supply and the relevant services are activated, it will send data to the bicycle owner.

The ConnectModule has its own internal battery, so its services are not dependent on the eBike battery's state of charge. The charge level of the internal battery can be viewed through the app **eBike Flow**. If the internal battery's state of charge is critical, an eBike battery should be inserted and the Bosch eBike charger should be connected.

Maintenance and Service

Maintenance and Cleaning

The ConnectModule requires no maintenance. In the event of damage or fault, contact an authorized dealer directly.

If services are not functioning despite being activated, please get in direct contact with the bicycle dealer from whom you bought the ConnectModule.

If you hand over your eBike to a bicycle dealer for maintenance, it is recommended to temporarily deactivate the **<eBike Lock>** and **<eBike Alarm>** services. This will prevent alarms being falsely triggered.

Transport

Whenever you transport your eBike (e.g. in a car trailer, on a train or plane, etc.), we recommend deactivating all the individual services or activating the **<Transport mode>**. This will then deactivate any communication from the ConnectModule. This will prevent alarms being falsely triggered.

After-sales service and advice on using products

If you have any questions about the eBike system and its components, contact an authorized bicycle dealer.

For contact details of authorized bike dealerships, please visit www.bosch-ebike.com.

Battery Recycling Program



The drive unit, on-board computer incl. operating unit, battery, speed sensor, accessories and packaging should be disposed of in an environmentally correct manner.

Do not dispose of eBikes and their components with household waste.



You may recycle your Bosch battery pack by calling 1.800.822.8837.

Robert Bosch GmbH
72757 Reutlingen
Germany

www.bosch-ebike.com

0 275 U08 3CM (2022.06) T / 20

Owner’s Manual – The Bosch Drive System
Drive Unit

BDU3360 | BDU3380



en Original operating instructions

This manual contains important safety, performance and service information. Read and understand it along with the information provided to you by your bicycle manufacturer before using the product, and keep it for reference.

Performance Line | Performance Line Sport

Table of Contents

Introduction 2
About Warnings 2
General Warnings 2
Using your Manual 3
Operating your Bosch drive unit 4
Safety instructions 4
Product description and specifications 6
Assembly 7
Operation 8
Maintenance/Cleaning 9
Cleaning 9
Taking care of your eBike 10
After-sales service and advice on using products 10
Disposal 10

Introduction

About Warnings

This manual contains many **DANGER**, **WARNING**, and **CAUTION** indicators concerning the consequences of failure to use, assemble, maintain, store, inspect and dispose of a Bosch-equipped eBike in a safe manner.

– The combination of the safety alert symbol and the word **DANGER** indicates a hazardous situation that, if not avoided, will result in death or serious injury.
– The combination of the safety alert symbol and the word **WARNING** indicates a hazardous situation that, if not avoided, could result in death or serious injury.
– The combination of the safety alert symbol and the word **CAUTION** indicates a hazardous situation that, if not avoided, could result in minor or moderate injury.

General Warnings



Read all safety warnings and all instructions. Failure to follow the warnings and instructions may result in death or serious injury.

Save all safety warnings and instructions for future reference.

The term **battery pack** used in these operating instructions refers to all original Bosch eBike battery packs.

▶ **Read ALL accompanying manuals before riding the bike for the first time.** Your Bosch Drive System comes with additional manuals and documents provided by the manufacturer of the bicycle and other components. Failure to read and understand safety information can result in death or serious injury.

⚠ WARNING

▶ **This manual contains important safety, performance and service information.** Read it before you take the first ride on your new bicycle, and keep it for reference. The manual can also be found online at www.bosch-ebike.com.

▶ **This manual is intended to be read together with the separate user manual provided with your bicycle.** Be sure to read all provided documents including labels on the product before your first ride.

▶ **Take responsibility for your own SAFETY.** If you have any questions or do not understand something, consult with your dealer or the bicycle or component manufacturer.

▶ **Some eBike accessories may present a choking hazard to small children.** Keep these accessories away from children.

⚠ CAUTION

▶ **The Bosch Drive System adds weight to your bicycle which you may not be used to lift.** Avoid injury, use proper lifting techniques.

Using your Manual

In addition to the functions outlined here, changes to software relating to troubleshooting and functional modifications may be introduced at any time.

Graphics

The bicycle shown in this manual may differ slightly from your bicycle, but will be similar enough to help you understand our instructions.

RIGHT-HAND and LEFT-HAND sides are determined by facing in the direction the bicycle will travel when going forward. When you see a broken line (------), the item referred to is hidden from view.

Operating your Bosch drive unit

Safety instructions



Read all the safety information and instructions. Failure to observe the safety information and follow instructions may result in electric shock, fire and/or serious injury.

Save all safety warnings and instructions for future reference.

The term **battery pack** used in these operating instructions refers to all original Bosch eBike battery packs.

- ▸ **Read and observe the safety warnings and instructions in all operating instructions of the eBike system and your eBike.**
- ▸ **Do not attempt to change – in particular, to increase – the power of your drive or the maximum speed that it supports.** Doing this may put yourself and others at risk, and you could also breach statutory regulations.
- ▸ **Do not make any modifications to your eBike system or fit any other products that might increase the performance of your eBike system.** Doing so will generally reduce the service life of the system and risks damaging the drive unit and the bike. You also run the risk of losing the guarantee and warranty claims on the bicycle you have purchased. By handling the system improperly you are also endangering your safety and that of other road users, thus running the risk of high personal liability costs and possibly even criminal prosecution in the event of accidents that can be attributed to manipulation of the bicycle.
- ▸ **Do not open the drive unit yourself. The drive unit must only be repaired by qualified personnel using only original spare parts.** This will ensure that the safety of the drive unit is maintained. Unauthorized opening of the drive unit will render warranty claims null and void.
- ▸ **All components fitted to the drive unit and all other components of the eBike drive (e.g. chainring, chainring receptacle, pedals) must only be replaced with identical components or components that have been specifically approved by the manufacturer for your eBike.** This will protect the drive unit from overloading and becoming damaged.
- ▸ **Remove the battery from the eBike before beginning work (e.g. inspection, repair, assembly, maintenance, work on the chain, etc.) on the eBike, transporting it with a car or airplane, or storing it.** Unintentional activation of the eBike system poses a risk of injury.
- ▸ **The eBike system can be activated by pushing the eBike backwards or by turning the pedals backwards.**



Under extreme conditions, such as continuously high loads at low speed when riding up hills or carrying loads, parts of the drive unit can reach temperatures in excess of 140 °F.

- ▸ **After a ride, do not allow your unprotected hands or legs to come into contact with the housing of the drive unit.** Under extreme conditions, such as continuously high torques at low travel speeds, or when riding up hills or carrying loads, very high temperatures may be reached on the housing.

  The temperatures that may be reached on the drive unit housing are influenced by the following factors:
  - – Ambient temperature
  - – Ride profile (route/gradient)
  - – Ride duration
  - – Assistance modes
  - – User behavior (personal effort)
  - – Total weight (rider, eBike, luggage)
  - – Motor cover on the drive unit

– Heat dissipation properties of the bicycle frame
– Type of drive unit and type of gear-shifting

▶ **Use only original Bosch batteries that the manufacturer has approved for your eBike.** Using other batteries can lead to injuries and pose a fire hazard. Bosch accepts no liability or warranty claims if other batteries are used.

Safety instructions for the rim magnet

The following safety instructions must be observed when handling the rim magnet:

▶ **Warning of very strong magnetic fields: The rim magnet generates a very strong magnetic field that may influence the magnetic storage media (e.g. credit card) and electronic devices (e.g. clock). There is a risk of data loss and damage to devices.** Do not move any media or devices sensitive to magnetic fields into the immediate vicinity of the rim magnet.

▶ **Warning of hand injuries caused by parts attracted to the magnet: There is a risk of injury if your fingers or hands get caught between the magnet and the objects attracted to it. This may cause skin injuries (e.g. if metal chips are attracted), crushing injuries, contusions or fractures.** You can avoid these by being vigilant and wearing suitable protective clothing.

▶ **Danger to persons with implants and other medical devices, e.g. pacemakers, defribrillators or insulin pumps:**
Keep these away from the immediate vicinity of the rim magnet.

– The magnet creates a field which can impair the function of implants and medical devices.
– To avoid impairments, the rim magnet should not be held directly in front of the chest.
– A minimum distance of 30 cm to the chest should be maintained.

▶ **Observe all national regulations which set out the approved use of eBikes.**

Privacy notice

When you connect the eBike to the **Bosch DiagnosticTool 3**, data about Bosch drive unit (e.g. energy consumption, temperature, etc.) is transferred to Bosch eBike Systems (Robert Bosch GmbH) for the purposes of product improvement. You can find more information about this on the Bosch eBike website at www.bosch-ebike.com.

Product description and specifications

Intended use

The drive unit is intended exclusively for driving your eBike and must not be used for any other purpose.

In addition to the functions outlined here, changes to software relating to troubleshooting and functional modifications may be introduced at any time.

Technical data

Drive unit		**Performance Line/ Performance Line Sport**
Product code		BDU3360 BDU3380
Continuous rated power	W	250
Torque at drive, max.	Nm	75
Rated voltage	V=	36
Operating temperature	°F	23 to 104
Storage temperature	°F	50 to 104
Protection rating		IP54
Weight, approx.	lbs	7.05

The Bosch eBike system uses FreeRTOS (see http://www.freertos.org).

Bicycle lights[A)]		
Voltage approx.[B)]	V=	12
Maximum power		
– Front light	W	17.4
– Rear light	W	0.6

A) Depends on legal regulations, not possible in all country-specific models via the eBike battery

B) When changing the bulbs, ensure that they are compatible with the Bosch eBike system (ask your bicycle dealer) and are suitable for the specified voltage. Bulbs must only be replaced with bulbs of the same voltage.

Inserting a bulb incorrectly can cause it to blow.

Details on noise emissions on the drive unit

The A-rated emission sound pressure level for the eBike system is < 70 dB(A) in standard operating mode. If the eBike is moved without authorization, the drive unit generates an alarm tone as a key feature of the **<eBike Alarm>** service. This alarm tone may exceed the emission sound pressure level of 70 dB(A) and is 80 dB(A) two meters away from the drive unit. The alarm tone is only available after activating the **<eBike Alarm>** service and can be deactivated again via the **eBike Flow** app.

Assembly

Checking the speed sensor (see figure A)

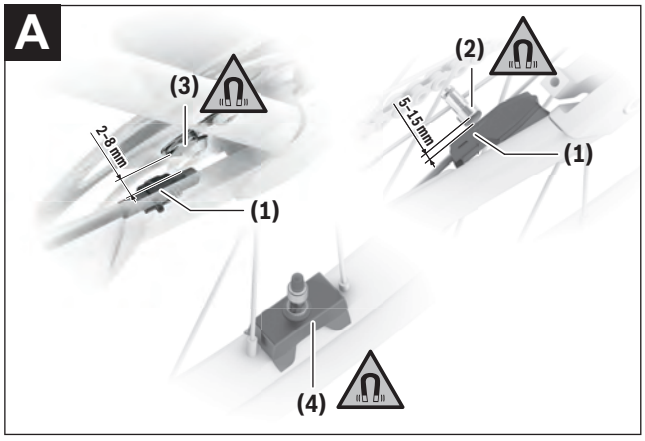

(1) Speed sensor [a)]

(2) Spoke magnet

(3) CenterLock magnet [b)]

(4) Rim magnet

a) Different sensor shape and installation position possible

b) a different installation position is possible

Speed Sensor (slim)

The speed sensor **(1)** and its CenterLock magnet **(3)** or spoke magnet **(2)** are mounted ex works in such a manner that the magnet, after a turn of the wheel, moves past the speed sensor with a clearance of at least 2 mm, yet no more than 15 mm.

The correct distance between the magnet and sensor must be maintained (see figure **A**) if design changes are made.

Notes: Ensure that you do not damage the sensor or sensor bracket when fitting or removing the rear wheel.

When changing a wheel, make sure that the sensor cable is routed so that it is not under tension and has no kinks.

The CenterLock magnet **(3)** can only be removed and reinserted up to five times.

Rim magnet

When installing a rim magnet, no sensor is required to detect a wheel turn. The drive unit itself detects when the magnet is close to it and calculates the speed and any other data required from the frequency of the emergence of the magnet field.

Since the drive unit is sensitive to magnetic fields, avoid other magnetic fields in the vicinity of the drive unit (e.g. magnetic clipless pedals, magnetic cadence sensors, etc.) in order to prevent disruption to the drive unit.

Operation

An operating unit is required for the starting operation of the eBike system. Observe the starting operation for the eBike system and drive unit control in the operating unit operating instructions.

Notes on cycling with the eBike system

Note: The eBike system **always** starts with assistance level **OFF**.

When does the eBike drive work?

The eBike drive assists your cycling only when you are pedaling. If you do not pedal, the assistance will not work. The motor output always depends on the pedaling force you apply.

If you apply less force, you will receive less assistance than if you apply a lot of force. This applies irrespective of the assistance level.

The eBike drive automatically switches off at speeds over **20/28 mph**. When the speed falls below **20/28 mph**, the drive automatically becomes available again.

An exception applies to the push assistance function, in which the eBike can be pushed at low speed without pedaling. The pedals may rotate when the push assistance is in use.

You can also use the eBike as a normal bicycle without assistance at any time, either by switching off the eBike system or by setting the assistance level to **OFF**. The same applies when the battery is drained.

Interaction between the eBike system and gear-shifting

The gear-shifting should be used with an eBike drive in the same way as with a normal bicycle (observe the operating instructions of your eBike on this point).

Irrespective of the type of gear-shifting, it is advisable to briefly stop pedaling when changing gear. This will facilitate the gear change and reduce wear on the powertrain.

By selecting the correct gear, you can increase your speed and range while applying the same amount of force.

Gaining initial experience

We recommend that you gain initial experience with the eBike away from busy roads.

Test the various assistance levels, beginning with the lowest level. As soon as you feel confident, you can ride your eBike in traffic like any other bicycle.

Test the range of your eBike in different conditions before planning longer and more demanding trips.

Influences on range

The range is affected by a number of factors, such as:

- Assistance level
- Speed
- Gear shifting behavior
- Tire type and tire pressure
- Age and condition of the battery
- Route profile (gradients) and conditions (road surface)
- Headwind and ambient temperature
- Weight of eBike, rider and luggage

For this reason, it is not possible to predict the range accurately before and during a trip. However, as a general rule:

- With the **same** assistance level on the eBike drive: The less energy you need to exert in order to reach a certain speed (e.g. by changing gears optimally), the less energy the eBike drive will consume and the higher the range per battery charge will be.
- The **higher** the selected assistance level under otherwise constant conditions, the smaller the range will be.

Maintenance/Cleaning

⚠ WARNING

- **Do not open any of the components. Service should only be carried out at an authorized Bosch eBike dealer.** Failure to follow above warning can cause death or serious injury. Refer to your bicycle manual or component manual for all non-Bosch drive system components.
- **Always remove the battery pack before performing any bicycle inspection, maintenance or repair.** Failure to remove the battery pack before performing bicycle inspection, maintenance or repair can lead to serious injury.
- **If you suspect that something is loose, do not ride your bike.** See your Bosch eBike dealer, only a qualified service provider should perform work on your Bosch Drive System. All nuts, bolts, screws require the correct tightening force. Too little force and the fastener may not hold securely. Too much force and the fastener can strip threads, stretch, deform or break. Either way, incorrect tightening force can result in component failure, which can cause you to lose control and fall.
- **If replacing your battery, buy only a genuine Bosch battery pack from an approved source. See your Bosch eBike dealer for original Bosch parts.**
- **Always switch the battery pack off, when inserting or removing it from the holder.** Never attempt to insert or remove the battery pack while riding the bike.
- **Do not charge or use your eBike in any area with a potentially explosive atmosphere, such as at a fueling area, or in areas where the air contains chemicals or particles (such as grain, dust, or metal powders).** Obey all signs and instructions.
- **Do not submerge your eBike components in water, or wash with pressurized hose.** Your Bosch drive unit is designed to be water tight to rain water or non-pressure hose washing.
- **Note down the manufacturer and the number of the key.** In case of loss of the keys, please refer to an authorised Bosch eBike dealer. Please provide the name of the manufacturer and the number of the key.
- **Do not paint any components of the Bosch drive system as they may cause premature failure of the component.**

When changing the bulbs, ensure that they are compatible with the Bosch eBike system (ask your bicycle dealer) and are suitable for the specified voltage. Bulbs must only be replaced with bulbs of the same voltage.

Cleaning

- **Do not submerge your eBike components in water, or wash with pressurized hose.** Your Bosch drive unit is designed to be water tight to rain water or non-pressure hose washing.

Keep all components of your eBike clean, especially the battery-pack contacts and corresponding holder contacts. All components including the drive unit may not be immersed in water or cleaned with a high-pressure cleaner. Clean them carefully with a soft, damp cloth (using only mild soap and water).

Taking care of your eBike

Please observe the operating and storage temperatures of the eBike components. Protect the drive unit, on-board computer and battery against extreme temperatures (e.g. from intense sunlight without adequate ventilation). Extreme temperatures can cause the components (especially the battery) to become damaged.

Have your eBike system checked by an expert at least once a year (including mechanical parts, up-to-dateness of system software).

Please have your eBike serviced and repaired by an authorized bicycle dealer.

After-sales service and advice on using products

If you have any questions about the eBike system and its components, contact an authorized bicycle dealer.

For contact details of authorized bike dealerships, please visit www.bosch-ebike.com.

Please contact an authorized bicycle dealer if the battery is no longer working.

Disposal



The drive unit, on-board computer incl. operating unit, battery, speed sensor, accessories and packaging should be disposed of in an environmentally correct manner.

Do not dispose of eBikes and their components with household waste.

Subject to change without notice.

Robert Bosch GmbH
72757 Reutlingen
Germany

www.bosch-ebike.com

0 275 U07 3D2 (2022.03) T / 32

Owner’s Manual – The Bosch Drive System
Drive Unit

BDU3740 | BDU3741 | BDU3760 | BDU3761 | BDU3780 | BDU3781



en Original operating instructions

This manual contains important safety, performance and service information. Read and understand it along with the information provided to you by your bicycle manufacturer before using the product, and keep it for reference.

Performance Line: CX | Cargo | CX Race Edition | Speed

Table of Contents

Introduction 2
About Warnings 2
General Warnings 2
Using your Manual 3
Operating your Bosch Drive Unit 4
Safety instructions 4
Product description and specifications 6
Assembly 7
Operation 7
Maintenance/Cleaning 9
Cleaning 9
Taking care of your eBike 10
After-sales service and advice on using products 10
Disposal 10

Introduction

About Warnings

This manual contains many **DANGER**, **WARNING**, and **CAUTION** indicators concerning the consequences of failure to use, assemble, maintain, store, inspect and dispose of a Bosch-equipped eBike in a safe manner.

– The combination of the safety alert symbol and the word **DANGER** indicates a hazardous situation that, if not avoided, will result in death or serious injury.
– The combination of the safety alert symbol and the word **WARNING** indicates a hazardous situation that, if not avoided, could result in death or serious injury.
– The combination of the safety alert symbol and the word **CAUTION** indicates a hazardous situation that, if not avoided, could result in minor or moderate injury.

General Warnings



Read all safety warnings and all instructions. Failure to follow the warnings and instructions may result in death or serious injury.

Save all safety warnings and instructions for future reference.

The term **battery pack** used in these operating instructions refers to all original Bosch eBike battery packs.

▶ **Read ALL accompanying manuals before riding the bike for the first time.** Your Bosch Drive System comes with additional manuals and documents provided by the manufacturer of the bicycle and other components. Failure to read and understand safety information can result in death or serious injury.

⚠ WARNING

▶ **This manual contains important safety, performance and service information.** Read it before you take the first ride on your new bicycle, and keep it for reference. The manual can also be found online at www.bosch-ebike.com.

▶ **This manual is intended to be read together with the separate user manual provided with your bicycle.** Be sure to read all provided documents including labels on the product before your first ride.

▶ **Take responsibility for your own SAFETY.** If you have any questions or do not understand something, consult with your dealer or the bicycle or component manufacturer.

▶ **Some eBike accessories may present a choking hazard to small children.** Keep these accessories away from children.

⚠ CAUTION

▶ **The Bosch Drive System adds weight to your bicycle which you may not be used to lift.** Avoid injury, use proper lifting techniques.

Using your Manual

In addition to the functions outlined here, changes to software relating to troubleshooting and functional modifications may be introduced at any time.

Graphics

The bicycle shown in this manual may differ slightly from your bicycle, but will be similar enough to help you understand our instructions.

RIGHT-HAND and LEFT-HAND sides are determined by facing in the direction the bicycle will travel when going forward. When you see a broken line (------), the item referred to is hidden from view.

Operating your Bosch Drive Unit

Safety instructions



Read and understand all safety warnings and instructions. Failure to follow the below warnings could result in death or serious injury.

Save all safety warnings and instructions for future reference.

The term **battery pack** used in these operating instructions refers to all original Bosch eBike battery packs.

- ▶ **Read and observe the safety warnings and instructions in all operating instructions of the eBike system and your eBike.**
- ▶ **Do not attempt to change – in particular, to increase – the power of your drive or the maximum speed that it supports.** Doing this may put yourself and others at risk, and you could also breach statutory regulations.
- ▶ **Do not make any modifications to your eBike system or fit any other products that might increase the performance of your eBike system.** Doing so will generally reduce the service life of the system and risks damaging the drive unit and the bike. You also run the risk of losing the guarantee and warranty claims on the bicycle you have purchased. By handling the system improperly you are also endangering your safety and that of other road users, thus running the risk of high personal liability costs and possibly even criminal prosecution in the event of accidents that can be attributed to manipulation of the bicycle.
- ▶ **Do not open the drive unit yourself. The drive unit must only be repaired by qualified personnel using only original spare parts.** This will ensure that the safety of the drive unit is maintained. Unauthorized opening of the drive unit will render warranty claims null and void.
- ▶ **All components fitted to the drive unit and all other components of the eBike drive (e.g. chainring, chainring receptacle, pedals) must only be replaced with identical components or components that have been specifically approved by the manufacturer for your eBike.** This will protect the drive unit from overloading and becoming damaged.
- ▶ **Remove the battery from the eBike before beginning work (e.g. inspection, repair, assembly, maintenance, work on the chain, etc.) on the eBike, transporting it with a car or airplane, or storing it.** Unintentional activation of the eBike system poses a risk of injury.
- ▶ **The push assistance function must only be used when pushing the eBike.** There is a risk of injury if the wheels of the eBike are not in contact with the ground while using the push assistance.
- ▶ **When the push assistance is activated, the pedals may turn at the same time.** When the push assistance function is activated, make sure that there is enough space between your legs and the turning pedals to avoid the risk of injury.
- ▶ **When using the push assistance, ensure that you can always control the eBike and hold it securely.** The push assistance can be suspended under certain conditions (e.g. obstacle on the pedal or accidentally slipping off the button of the operating unit). The eBike can suddenly move backwards towards you or start to tip. This poses a particular risk for the user if there is an additional load. When using the push assistance on the eBike, do not place the eBike in situations in which you cannot hold the eBike by yourself.



Under extreme conditions, such as continuously high loads at low speed when riding up hills or carrying loads, parts of the drive unit can reach temperatures in excess of 140 °F.

- ▶ **After a ride, do not allow your unprotected hands or legs to come into contact with the housing of the drive unit.** Under extreme conditions, such as continuously high torques at low travel speeds, or when riding up hills or carrying loads, very high temperatures may be reached on the housing.
  The temperatures that may be reached on the drive unit housing are influenced by the following factors:
  – Ambient temperature
  – Ride profile (route/gradient)
  – Ride duration
  – Assistance modes
  – User behavior (personal effort)
  – Total weight (rider, eBike, luggage)
  – Motor cover on the drive unit
  – Heat dissipation properties of the bicycle frame
  – Type of drive unit and type of gear-shifting
- ▶ **Use only original Bosch batteries that the manufacturer has approved for your eBike.** Using other batteries can lead to injuries and pose a fire hazard. Bosch accepts no liability or warranty claims if other batteries are used.

Safety instructions for the rim magnet

The following safety instructions must be observed when handling the rim magnet:

- ▶ **Warning of very strong magnetic fields: The rim magnet generates a very strong magnetic field that may influence the magnetic storage media (e.g. credit card) and electronic devices (e.g. clock). There is a risk of data loss and damage to devices.** Do not move any media or devices sensitive to magnetic fields into the immediate vicinity of the rim magnet.
- ▶ **Warning of hand injuries caused by parts attracted to the magnet: There is a risk of injury if your fingers or hands get caught between the magnet and the objects attracted to it. This may cause skin injuries (e.g. if metal chips are attracted), crushing injuries, contusions or fractures.** You can avoid these by being vigilant and wearing suitable protective clothing.
- ▶ **Danger to persons with implants and other medical devices, e.g. pacemakers, defribrillators or insulin pumps:**
  Keep these away from the immediate vicinity of the rim magnet.
  – The magnet creates a field which can impair the function of implants and medical devices.
  – To avoid impairments, the rim magnet should not be held directly in front of the chest.
  – A minimum distance of 30 cm to the chest should be maintained.
- ▶ **Observe all national regulations which set out the approved use of eBikes.**
- ▶ **Please observe all local, state and federal regulations when registering and using eBikes.**

Privacy notice

When you connect the eBike to the **Bosch DiagnosticTool 3**, data about Bosch drive unit (e.g. energy consumption, temperature, etc.) is transferred to Bosch eBike Systems (Robert Bosch GmbH) for the purposes of product improvement. You can find more information about this on the Bosch eBike website at www.bosch-ebike.com.

Product description and specifications

Intended use

The drive unit is intended exclusively for driving your eBike and must not be used for any other purpose.

In addition to the functions outlined here, changes to software relating to troubleshooting and functional modifications may be introduced at any time.

Technical data

Drive unit		Drive Unit Performance Line CX/Cargo/ CX Race Edition/Speed
Product code		BDU3740 BDU3741 BDU3760 BDU3761 BDU3780 BDU3781
Continuous rated power	W	250
Torque at drive, max.	Nm	85
Rated voltage	V=	36
Operating temperature	°F	23 to 104
Storage temperature	°F	50 to 104
Protection rating		IP54
Weight, approx.	lbs	6.6

The Bosch eBike system uses FreeRTOS (see http://www.freertos.org).

Bicycle lights[A)]		
Voltage approx.[B)]	V=	12
Maximum power		
– Front light	W	17.4
– Rear light	W	0.6

A) Depends on legal regulations, not possible in all country-specific models via the eBike battery

B) When changing the bulbs, ensure that they are compatible with the Bosch eBike system (ask your bicycle dealer) and are suitable for the specified voltage. Bulbs must only be replaced with bulbs of the same voltage.

Inserting a bulb incorrectly can cause it to blow.

Details on noise emissions on the drive unit

The A-rated emission sound pressure level for the eBike system is < 70 dB(A) in standard operating mode. If the eBike is moved without authorization, the drive unit generates an alarm tone as a key feature of the **<eBike Alarm>** service. This alarm tone may exceed the emission sound pressure level of 70 dB(A) and is 80 dB(A) two meters away from the drive unit. The alarm tone is only available after activating the **<eBike Alarm>** service and can be deactivated again via the **eBike Flow** app.

Assembly

Checking the speed sensor (see figure A)

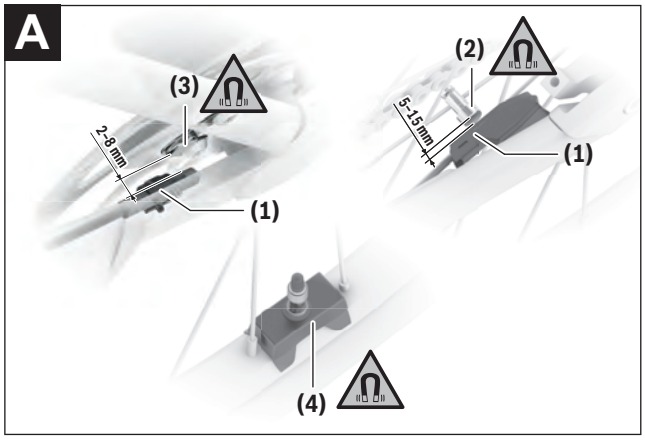

(1) Speed sensor [a)]
(2) Spoke magnet
(3) CenterLock magnet [b)]
(4) Rim magnet

a) Different sensor shape and installation position possible
b) a different installation position is possible

Speed Sensor (slim)

The speed sensor **(1)** and its CenterLock magnet **(3)** or spoke magnet **(2)** are mounted ex works in such a manner that the magnet, after a turn of the wheel, moves past the speed sensor with a clearance of at least 2 mm, yet no more than 15 mm.

The correct distance between the magnet and sensor must be maintained (see figure **A**) if design changes are made.

Notes: Ensure that you do not damage the sensor or sensor bracket when fitting or removing the rear wheel.

When changing a wheel, make sure that the sensor cable is routed so that it is not under tension and has no kinks.

The CenterLock magnet **(3)** can only be removed and reinserted up to five times.

Rim magnet

When installing a rim magnet, no sensor is required to detect a wheel turn. The drive unit itself detects when the magnet is close to it and calculates the speed and any other data required from the frequency of the emergence of the magnet field.

Since the drive unit is sensitive to magnetic fields, avoid other magnetic fields in the vicinity of the drive unit (e.g. magnetic clipless pedals, magnetic cadence sensors, etc.) in order to prevent disruption to the drive unit.

Operation

An operating unit is required for the starting operation of the eBike system. Observe the starting operation for the eBike system and drive unit control in the operating unit operating instructions.

Notes on cycling with the eBike system

Note: The eBike system **always** starts in **OFF** mode for drive units with a maximum speed of more than **20 mph**.

When does the eBike drive work?

The eBike drive assists your cycling only when you are pedaling. If you do not pedal, the assistance will not work. The motor output always depends on the pedaling force you apply.

If you apply less force, you will receive less assistance than if you apply a lot of force. This applies irrespective of the assistance level.

The eBike drive automatically switches off at speeds over **20/28 mph**. When the speed falls below **20/28 mph**, the drive automatically becomes available again.

An exception applies to the push assistance function, in which the eBike can be pushed at low speed without pedaling. The pedals may rotate when the push assistance is in use.

You can also use the eBike as a normal bicycle without assistance at any time, either by switching off the

eBike system or by setting the assistance level to **OFF**. The same applies when the battery is drained.

Interaction between the eBike system and gear-shifting

The gear-shifting should be used with an eBike drive in the same way as with a normal bicycle (observe the operating instructions of your eBike on this point).

Irrespective of the type of gear-shifting, it is advisable to briefly stop pedaling when changing gear. This will facilitate the gear change and reduce wear on the powertrain.

By selecting the correct gear, you can increase your speed and range while applying the same amount of force.

Gaining initial experience

We recommend that you gain initial experience with the eBike away from busy roads.

Test the various assistance levels, beginning with the lowest level. As soon as you feel confident, you can ride your eBike in traffic like any other bicycle.

Test the range of your eBike in different conditions before planning longer and more demanding trips.

Influences on range

The range is affected by a number of factors, such as:

- Assistance level
- Speed
- Gear shifting behavior
- Tire type and tire pressure
- Age and condition of the battery
- Route profile (gradients) and conditions (road surface)
- Headwind and ambient temperature
- Weight of eBike, rider and luggage

For this reason, it is not possible to predict the range accurately before and during a trip. However, as a general rule:

- With the **same** assistance level on the eBike drive: The less energy you need to exert in order to reach a certain speed (e.g. by changing gears optimally), the less energy the eBike drive will consume and the higher the range per battery charge will be.
- The **higher** the selected assistance level under otherwise constant conditions, the smaller the range will be.

Maintenance/Cleaning

⚠ WARNING

- **Do not open any of the components. Service should only be carried out at an authorized Bosch eBike dealer.** Failure to follow above warning can cause death or serious injury. Refer to your bicycle manual or component manual for all non-Bosch drive system components.
- **Always remove the battery pack before performing any bicycle inspection, maintenance or repair.** Failure to remove the battery pack before performing bicycle inspection, maintenance or repair can lead to serious injury.
- **If you suspect that something is loose, do not ride your bike.** See your Bosch eBike dealer, only a qualified service provider should perform work on your Bosch Drive System. All nuts, bolts, screws require the correct tightening force. Too little force and the fastener may not hold securely. Too much force and the fastener can strip threads, stretch, deform or break. Either way, incorrect tightening force can result in component failure, which can cause you to lose control and fall.
- **If replacing your battery, buy only a genuine Bosch battery pack from an approved source. See your Bosch eBike dealer for original Bosch parts.**
- **Always switch the battery pack off, when inserting or removing it from the holder.** Never attempt to insert or remove the battery pack while riding the bike.
- **Do not charge or use your eBike in any area with a potentially explosive atmosphere, such as at a fueling area, or in areas where the air contains chemicals or particles (such as grain, dust, or metal powders).** Obey all signs and instructions.
- **Do not submerge your eBike components in water, or wash with pressurized hose.** Your Bosch drive unit is designed to be water tight to rain water or non-pressure hose washing.
- **Note down the manufacturer and the number of the key.** In case of loss of the keys, please refer to an authorised Bosch eBike dealer. Please provide the name of the manufacturer and the number of the key.
- **Do not paint any components of the Bosch drive system as they may cause premature failure of the component.**

When changing the bulbs, ensure that they are compatible with the Bosch eBike system (ask your bicycle dealer) and are suitable for the specified voltage. Bulbs must only be replaced with bulbs of the same voltage.

Cleaning

- **Do not submerge your eBike components in water, or wash with pressurized hose.** Your Bosch drive unit is designed to be water tight to rain water or non-pressure hose washing.

Keep all components of your eBike clean, especially the battery-pack contacts and corresponding holder contacts. All components including the drive unit may not be immersed in water or cleaned with a high-pressure cleaner. Clean them carefully with a soft, damp cloth (using only mild soap and water).

Taking care of your eBike

Please observe the operating and storage temperatures of the eBike components. Protect the drive unit, on-board computer and battery against extreme temperatures (e.g. from intense sunlight without adequate ventilation). Extreme temperatures can cause the components (especially the battery) to become damaged.

Have your eBike system checked by an expert at least once a year (including mechanical parts, up-to-dateness of system software).

Please have your eBike serviced and repaired by an authorized bicycle dealer.

After-sales service and advice on using products

If you have any questions about the eBike system and its components, contact an authorized bicycle dealer.

For contact details of authorized bike dealerships, please visit www.bosch-ebike.com.

Please contact an authorized bicycle dealer if the battery is no longer working.

Disposal



The drive unit, on-board computer incl. operating unit, battery, speed sensor, accessories and packaging should be disposed of in an environmentally correct manner.

Do not dispose of eBikes and their components with household waste.

Subject to change without notice.

Robert Bosch GmbH
72757 Reutlingen
Germany

www.bosch-ebike.com

0 275 U07 3D1 (2022.03) T / 34

Owner’s Manual – The Bosch Drive System
PowerTube 500 | 625 | 750
PowerPack 545 | 725

BBP3755 | BBP3756 | BBP3765 | BBP3766 |
BBP3775 | BBP3776 | BBP3556 | BBP3575



en Original operating instructions

This manual contains important safety, performance and service information. Read and understand it along with the information provided to you by your bicycle manufacturer before using the product, and keep it for reference.

Table of contents

Introduction 2
About Warnings 2
General Warnings 2
Using your Manual 3
On-product warning labels 4
Handling the lithium-ion battery pack 6
Safety warnings for Bosch eBike batteries 6
Product description and specifications 8
Fitting 12
Operation 16
Transport 16
Maintenance/cleaning 17
Storing 17
Troubleshooting 19
Battery Recycling Program 20

Introduction

About Warnings

This manual contains many **DANGER**, **WARNING**, and **CAUTION** indicators concerning the consequences of failure to use, assemble, maintain, store, inspect and dispose of a Bosch-equipped eBike in a safe manner.

– The combination of the safety alert symbol and the word **DANGER** indicates a hazardous situation that, if not avoided, will result in death or serious injury.
– The combination of the safety alert symbol and the word **WARNING** indicates a hazardous situation that, if not avoided, could result in death or serious injury.
– The combination of the safety alert symbol and the word **CAUTION** indicates a hazardous situation that, if not avoided, could result in minor or moderate injury.

General Warnings



Read all safety warnings and all instructions. Failure to follow the warnings and instructions may result in death or serious injury.

Save all safety warnings and instructions for future reference.

The term **battery pack** used in these operating instructions refers to all original Bosch eBike battery packs.

▶ **Read ALL accompanying manuals before riding the bike for the first time.** Your Bosch Drive System comes with additional manuals and documents provided by the manufacturer of the bicycle and other components. Failure to read and understand safety information can result in death or serious injury.

⚠ WARNING

▶ **This manual contains important safety, performance and service information.** Read it before you take the first ride on your new bicycle, and keep it for reference. The manual can also be found online at www.bosch-ebike.com.

▶ **This manual is intended to be read together with the separate user manual provided with your bicycle.** Be sure to read all provided documents including labels on the product before your first ride.

▶ **Take responsibility for your own SAFETY.** If you have any questions or do not understand something, consult with your dealer or the bicycle or component manufacturer.

▶ **Some eBike accessories may present a choking hazard to small children.** Keep these accessories away from children.

⚠ CAUTION

▶ **The Bosch Drive System adds weight to your bicycle which you may not be used to lift.** Avoid injury, use proper lifting techniques.

Using your Manual

In addition to the functions outlined here, changes to software relating to troubleshooting and functional modifications may be introduced at any time.

Graphics

The bicycle shown in this manual may differ slightly from your bicycle, but will be similar enough to help you understand our instructions.

RIGHT-HAND and LEFT-HAND sides are determined by facing in the direction the bicycle will travel when going forward. When you see a broken line (------), the item referred to is hidden from view.

On-product warning labels

A



B



C



A, B Safety instructions for PowerPack
Note: The depicted labels may differ from the labels on the product.

C Safety instructions for PowerTube

- **Warning labels have been placed on the Bosch eBike System for your protection. Read and follow the instructions of the labels on the product carefully. If a label becomes illegible or comes off, contact your Bosch bicycle dealer to obtain a replacement.** Replacement safety labels are provided by Bosch at no charge.

Handling the lithium-ion battery pack

Safety warnings for Bosch eBike batteries




Read and understand all safety warnings and instructions. Failure to follow the below warnings could result in death or serious injury.

Save all safety warnings and instructions for future reference.

The term **battery pack** used in these operating instructions refers to all original Bosch eBike battery packs.

- **Read and observe the safety warnings and instructions in all operating instructions of the eBike system and your eBike.**

⚠ DANGER

- **Do not puncture or crush the battery pack. Do not impact the battery pack or modify it in any way.** Do not use the battery pack if it shows visible damage. Danger of fire or explosion which can cause death or serious injury.



Protect the battery pack against heat (e.g., temperature > 140 °F), fire and immersing into water. Danger of explosion.

⚠ WARNING

- **Use only original Bosch battery packs approved for your eBike by the manufacturer and purchased from a credible source.** Use of non-approved or counterfeit battery packs can lead to death or serious injury.
- **Remove the battery from the eBike before beginning work (e.g. inspection, repair, assembly, maintenance, work on the chain, etc.) on the eBike, transporting it with a car or airplane, or storing it.** Unintentional activation of the eBike system poses a risk of injury.
- **Do not open the battery.** There is a risk of short-circuiting. Opening the battery voids any and all warranty claims.
- **When the battery is not in use, keep it away from paper clips, coins, keys, nails, screws or other small metal objects that could make a connection from one terminal to another.** A short circuit between the battery terminals may cause burns or a fire. Short circuit damage which occurs in this instance voids any and all warranty claims against Bosch.
- **Avoid mechanical loads and exposure to high temperatures.** These can damage the battery cells and cause the flammable contents to leak out.
- **Do not place the charger or the battery near flammable materials. Ensure the battery is completely dry and placed on a fireproof surface before charging.** There is a risk of fire due to the heat generated during charging.
- **The eBike battery must not be left unattended while charging.**
- **If used incorrectly, liquid may leak from the battery. Contact with this liquid should be avoided. If contact occurs, rinse off with water. If the liquid comes into contact with your eyes, seek additional medical attention.** Liquid leaking from the battery may cause irritation or scalding.
- **Batteries must not be subjected to mechanical shock.** There is a risk of the battery being damaged.
- **The battery may give off fumes if it becomes damaged or is used incorrectly. Ensure the area is well ventilated and seek medical attention should you experience any adverse effects.** The fumes may irritate the respiratory system.

- ▸ **Only charge the battery using original Bosch chargers.** When using chargers that are not made by Bosch, the risk of fire cannot be excluded.
- ▸ **Use the battery only in conjunction with eBikes that have original Bosch eBike drive systems.** This is the only way in which you can protect the battery against dangerous overload.
- ▸ **Use only original Bosch batteries that the manufacturer has approved for your eBike.** Using other batteries can lead to injuries and pose a fire hazard. Bosch accepts no liability or warranty claims if other batteries are used.
- ▸ **Keep the battery away from children.**

The safety of both our customers and our products is important to us. Our eBike batteries are lithium-ion batteries which have been developed and manufactured in accordance with the latest technology. We comply with or exceed the requirements of all relevant safety standards. When charged, these lithium-ion batteries contain a high level of energy. If a fault occurs (which may not be detectable from the outside), in very rare cases and under unfavorable conditions, lithium-ion batteries can catch fire.

Privacy notice

When you connect the eBike to the **Bosch DiagnosticTool 3**, data about the eBike batteries (e.g. temperature, cell voltage, etc.) is transferred to Bosch eBike Systems (Robert Bosch GmbH) for the purposes of product improvement. You can find more information about this on the Bosch eBike website at www.bosch-ebike.com.

Product description and specifications

Product features PowerTube

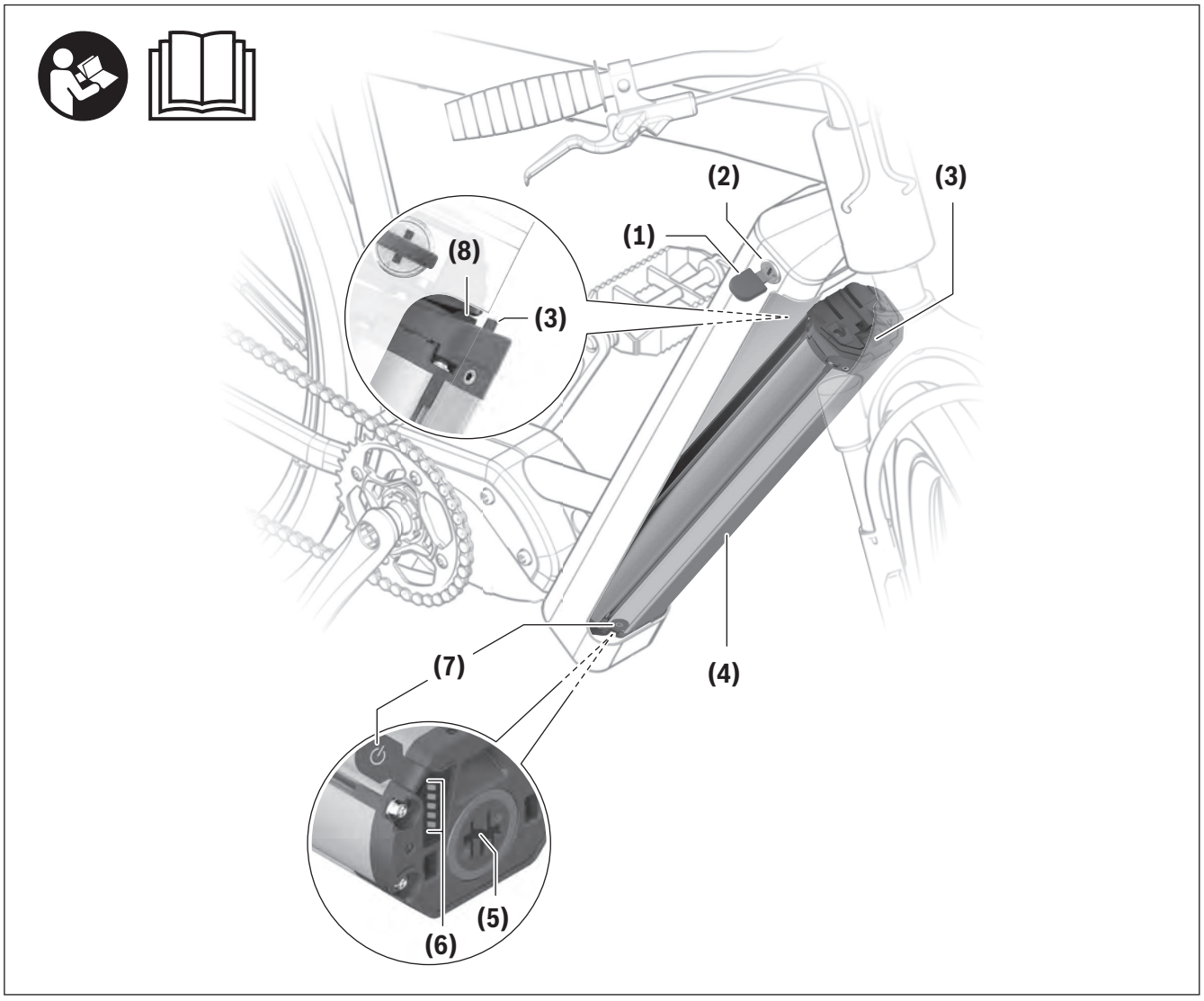

All representations of bike components are schematic and can deviate from your eBike.

(1) Key for the battery lock
(2) Battery lock
(3) PowerTube battery safety hook
(4) PowerTube battery (pivot)
(5) Socket for charging connector
(6) Operation/battery charge indicator
(7) On/off button
(8) PowerTube battery safety restraint

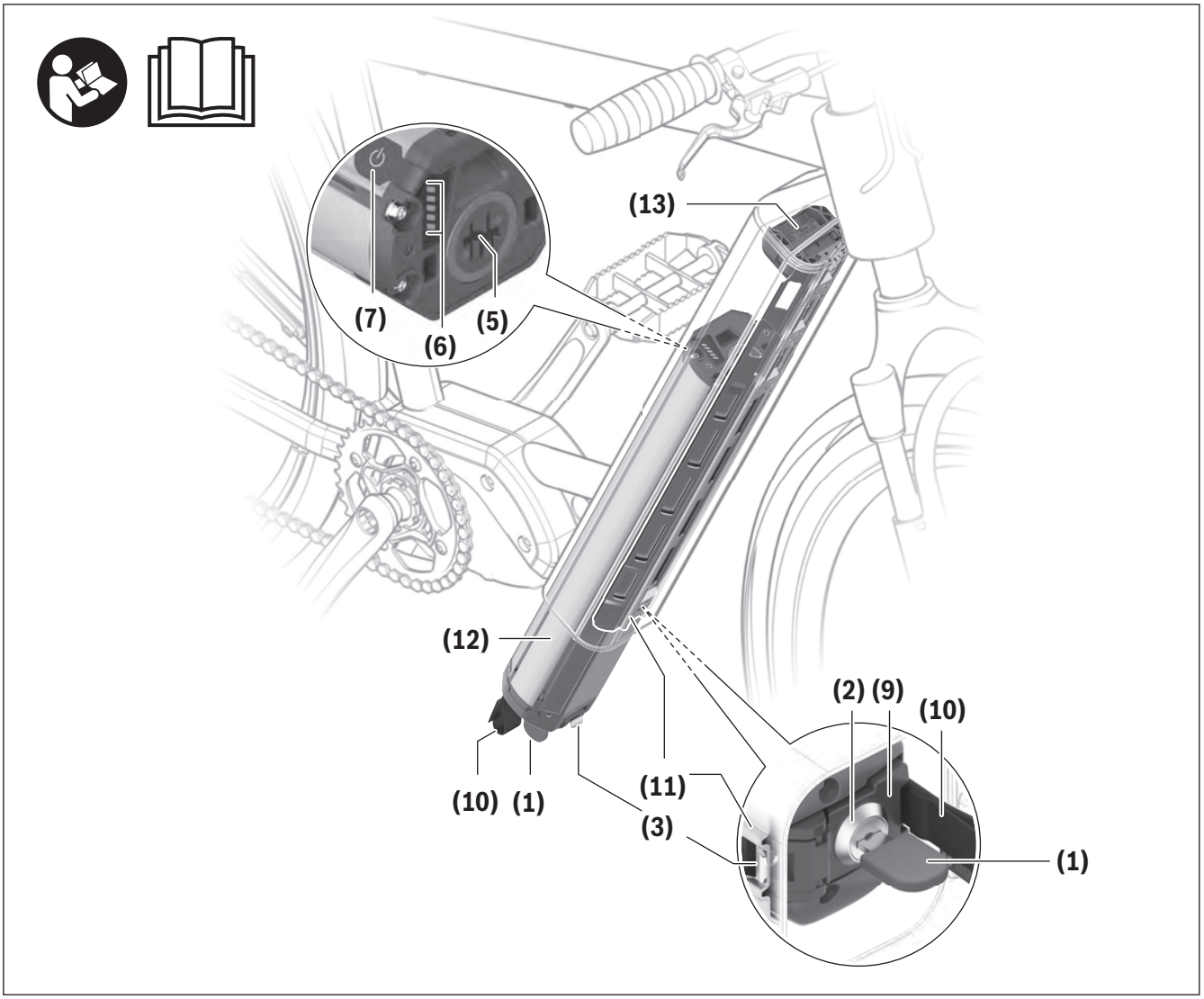

All representations of bike components are schematic and can deviate from your eBike.

(1) Key for the battery lock
(2) Battery lock
(3) PowerTube battery safety hook
(5) Socket for charging connector
(6) Operation/battery charge indicator
(7) On/off button
(9) Locking mechanism
(10) Pull strap
(11) Axial rail
(12) PowerTube battery (axial)
(13) Upper axial PowerTube holder

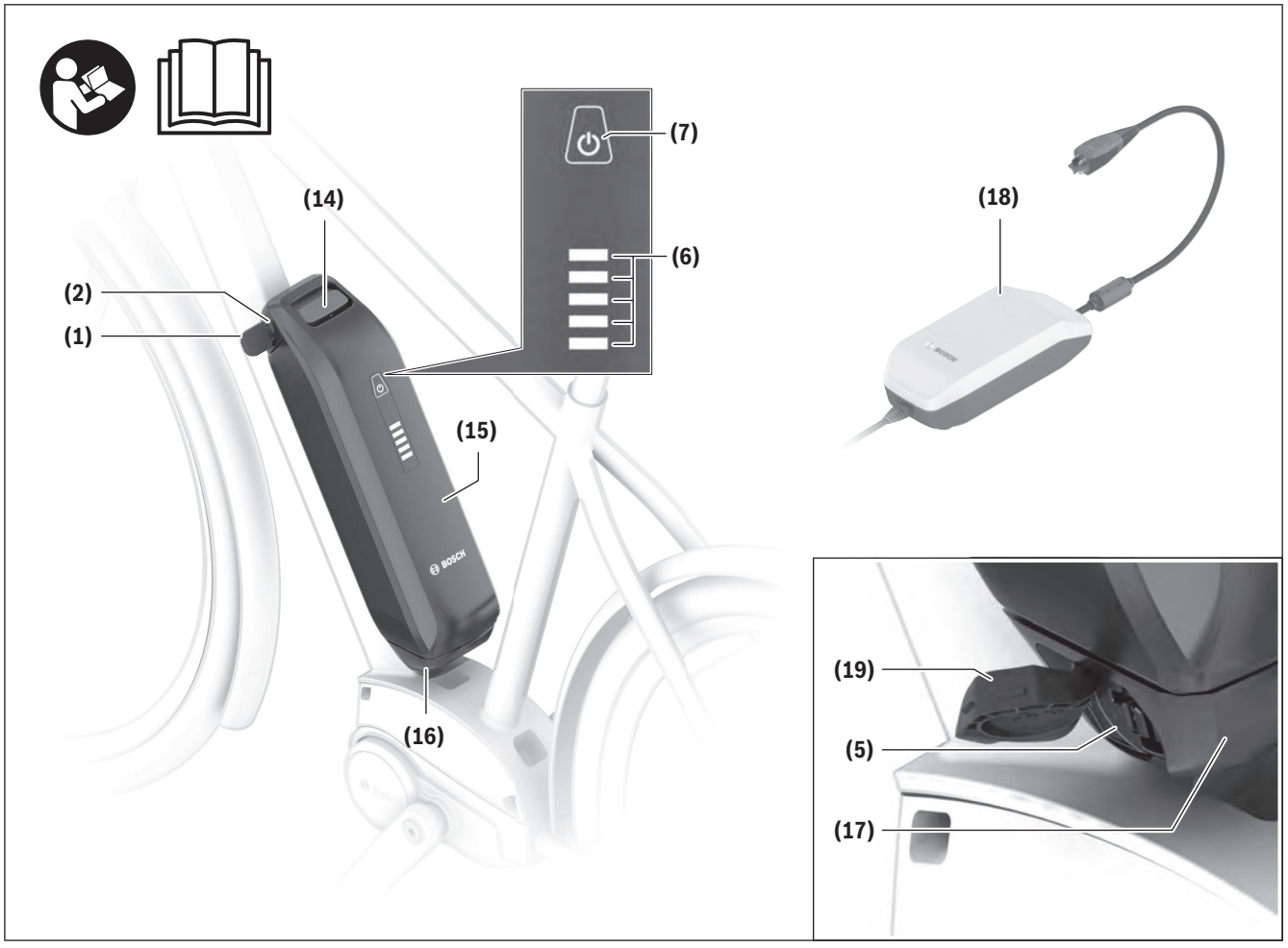

All representations of bike components are schematic and can deviate from your eBike.

(1) Key for the battery lock
(2) Battery lock
(5) Socket for charging connector
(6) Operation/battery charge indicator
(7) On/off button
(14) Upper holder for PowerPack battery
(15) PowerPack battery
(16) Lower holder for PowerPack battery (socket without charging option)
(17) Lower holder for PowerPack battery (socket with charging option)
(18) Charger
(19) Charging socket cover

Intended Use

The Bosch eBike batteries are intended exclusively to provide the power supply for your eBike drive unit and must not be used for any other purpose.

Technical data

Li-ion battery		PowerTube 500	PowerTube 625	PowerTube 750
Product code	Horizon-tal	BBP3755	BBP3765	BBP3775
Product code	Vertical	BBP3756	BBP3766	BBP3776
Rated voltage	V=	36	36	36
Nominal capacity	Ah	13.4	16.7	20.1
Energy	Wh	500[A)]	625[A)]	750[A)]
Operating temperature	°F	23 to 104	23 to 104	23 to 104
Storage temperature	°F	50 to 104	50 to 104	50 to 104
Permitted charging temperature range	°F	32 to 104	32 to 104	32 to 104
Weight, approx.	lbs	6.6	7.9	9.6
Protection rating		IP54	IP54	IP54

A) Advertised battery energy capacity is an approximation. Due to manufacturing tolerances measured capacity may not always match the advertised capacity.

Li-ion battery		PowerPack 545	PowerPack 725
Product code		BBP3556	BBP3575
Rated voltage	V=	36	36
Nominal capacity	Ah	14.4	19.2
Energy	Wh	545[A)]	725[A)]
Operating temperature	°F	23 to 104	23 to 104
Storage temperature	°F	50 to 104	50 to 104
Permitted charging temperature range	°F	32 to 104	32 to 104
Weight, approx.	lbs	6.6	8.8
Protection rating		IP54	IP54

A) Advertised battery energy capacity is an approximation. Due to manufacturing tolerances measured capacity may not always match the advertised capacity.

Fitting

▶ **Ensure the battery is placed on clean surfaces only.** Avoid getting dirt, e.g. sand or soil, in the charging socket and contacts in particular.

Testing the battery before using it for the first time

Test the battery before charging it for the first time or using it in your eBike.

To do this, press the on/off button **(7)** to switch the battery on. If none of the LEDs on the battery charge indicator **(6)** light up, the battery may be damaged.

If at least one (but not all) of the LEDs on the battery charge indicator **(6)** lights up, the battery will need to be fully charged before using it for the first time.

▶ **Do not charge or use batteries if they are damaged.** Contact an authorized bicycle dealer.

Charging the battery

▶ **A Bosch eBike battery must only be charged using an original Bosch eBike charger.**

Note: The battery is supplied partially charged. To ensure full battery capacity, fully charge the battery in the charger before using it for the first time.

To charge the battery, read and follow the instructions in the operating manual for the charger.

The battery can be charged at any state of charge. Interrupting the charging process does not damage the battery.

The battery has a temperature monitoring function which only allows it to be charged within a temperature range of **32 °F** to **104 °F**.

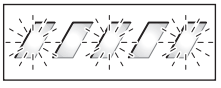

If the temperature of the battery is outside this charging range, three of the LEDs on the battery charge indicator **(6)** will flash. Disconnect the battery from the charger and let it acclimatize.

⚠ CAUTION

▶ **Do not connect the battery pack to the charger until it has reached the allowable charging temperature.**

Battery charge indicator

The five LEDs on the battery charge indicator **(6)** indicate the battery's state of charge when the battery is switched on.

Each LED represents approximately 20% of the charging capacity. When the battery is fully charged, all five LEDs will be lit.

The battery's state of charge when switched on is also shown on the display of the on-board computer. Read and follow the instructions in the operating manuals for the drive unit and on-board computer.

If the battery capacity is less than 10%, the last remaining LED will flash.

If the battery capacity is less than 5%, all the LEDs on the battery charge indicator **(6)** on the battery will go out. The display function of the on-board computer, however, will carry on working.

Once charging is complete, disconnect the battery from the charger and the charger from the mains.

Inserting and removing the battery

▶ **Always switch off the battery and the eBike system when inserting the battery into the holder or removing it from the holder.**

Removing the PowerTube battery (pivot) (see figure A)

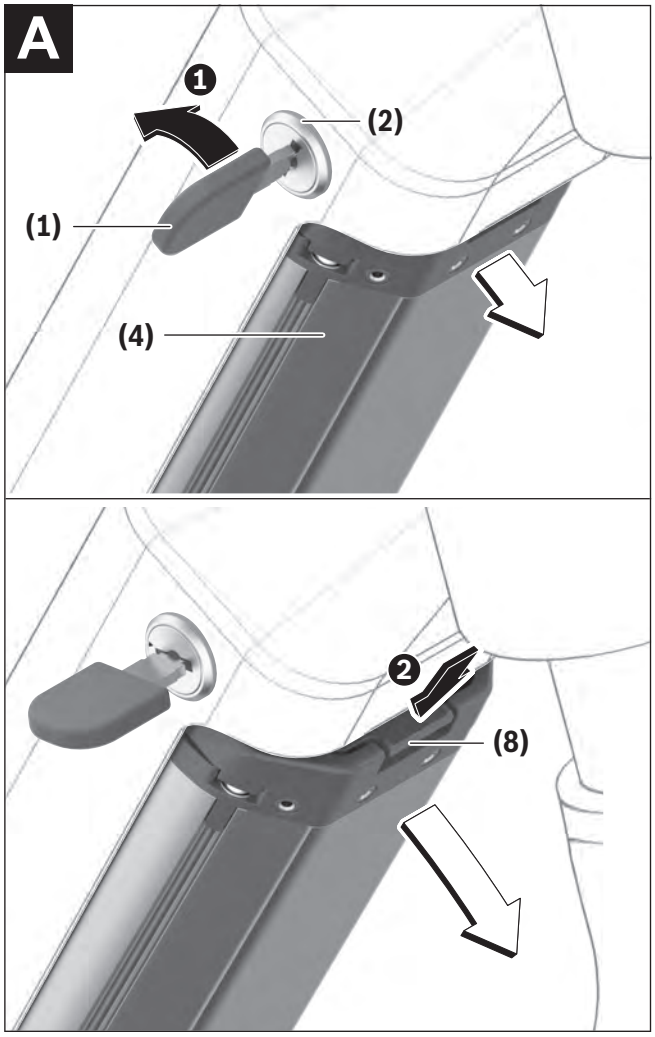

❶ To remove the PowerTube battery **(4)**, open the lock **(2)** using the key **(1)**. The battery will be unlocked and fall into the safety restraint **(8)**.

❷ Press on the safety restraint from above. The battery will be unlocked completely and fall into your hand. Pull the battery out of the frame.

Note: As a result of **varying** designs, the battery may need to be inserted and removed using a different method. Read the eBike manufacturer's operating instructions.

Inserting the PowerTube battery (pivot) (see figure B)

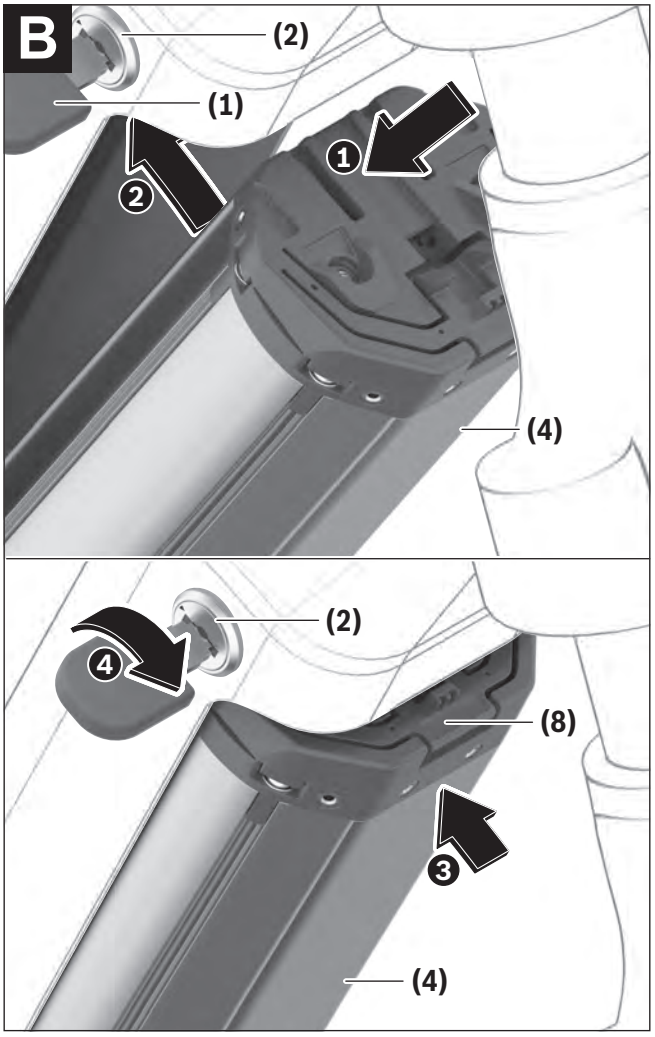

In order for the battery to be inserted, the key **(1)** must be inserted into the lock **(2)** and the lock must be open.

❶ To insert the PowerTube battery **(4)**, place it so that its contacts are in the lower holder of the frame.

❷ Push the battery upwards until it is held by the safety restraint **(8)**.

❸ Hold the lock open with the key and press the battery upwards until you hear it click into place. Check that the battery is secure in all directions.

❹ Always secure the battery by closing the lock **(2)** – otherwise the lock may open and the battery may fall out of the holder.

Always remove the key **(1)** from the lock **(2)** after locking it. This prevents both the key from falling out and the battery from being removed by unauthorized third parties when the eBike is not in use.

Removing the PowerTube battery (axial) (see figure C)

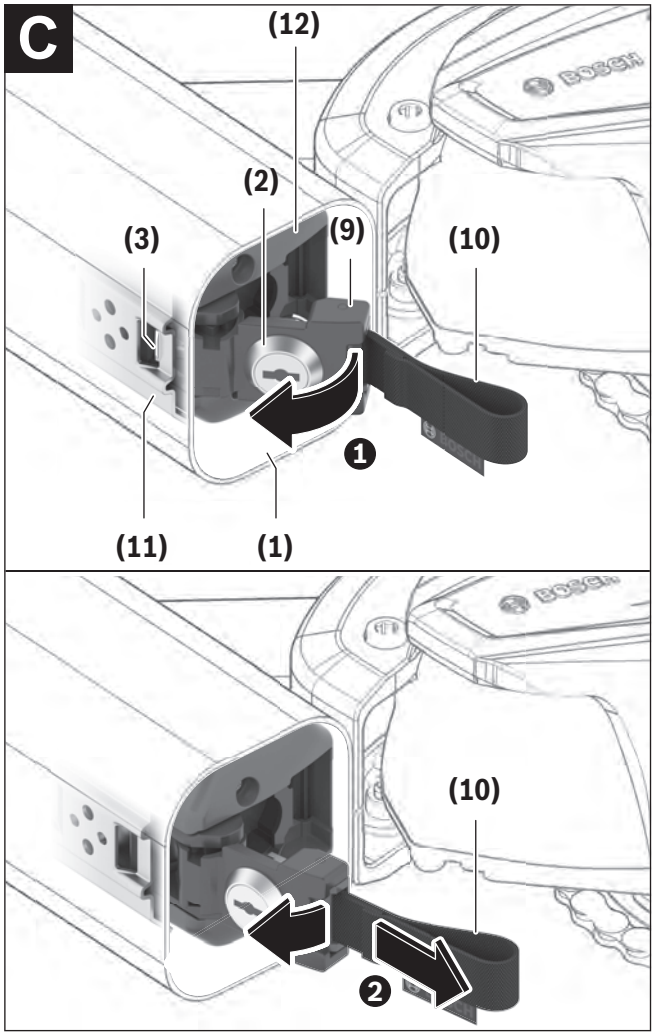

❶ To remove the PowerTube battery **(12)**, open the lock **(2)** using the key **(1)**, remove the key **(1)** and fold the locking mechanism **(9)** to the side.

❷ Use the pull strap **(10)** to pull the battery **(12)** out of the frame and keep hold of it so that it does not fall out of the frame.

Note: As a result of **varying** designs, the battery may need to be inserted and removed using a different method. Read the eBike manufacturer's operating instructions.

Inserting the PowerTube battery (axial) (see figure D)

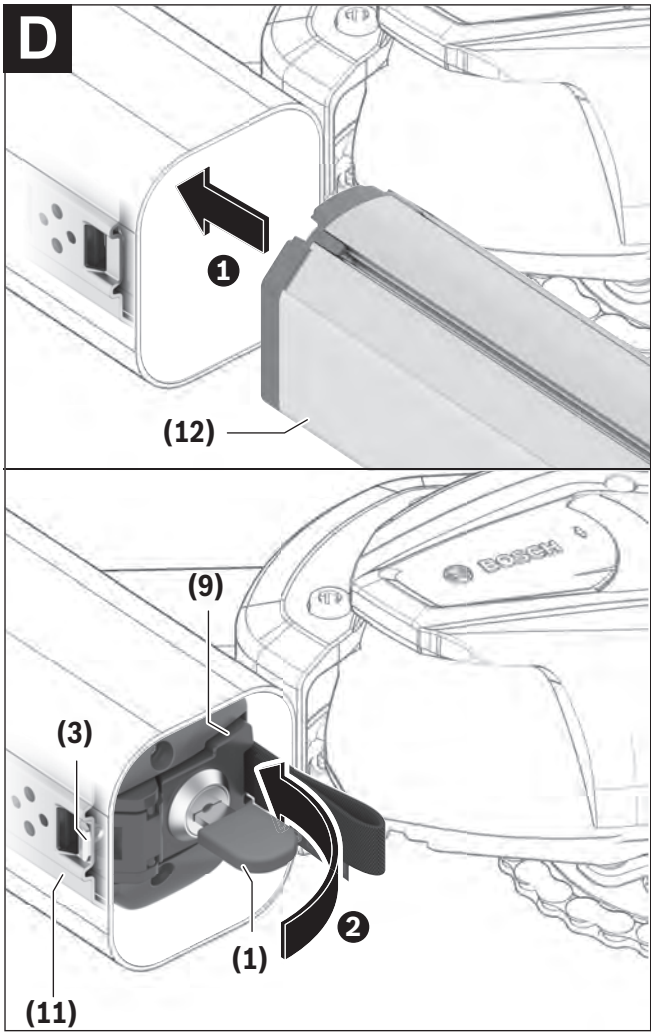

In order for the battery to be inserted, the locking mechanism **(9)** must be folded to the side. At this point, the key **(1)** must not be inserted in the battery lock **(2)**.

❶ To insert the PowerTube battery, insert it into the frame with the socket for the charging connector **(5)** facing upwards until the battery clicks into place. Ensure that the battery is aligned correctly.

❷ Close the locking mechanism **(9)**, insert the key **(1)** into the battery lock **(2)** and secure the battery. Make sure that the safety hook **(3)** is hooked in at the opening of the axial rail **(11)**.

❸ Check that the battery is secure in all directions.

Always remove the key **(1)** from the lock **(2)** after locking it. This prevents both the key from falling out and the battery from being removed by unauthorized third parties when the eBike is not in use.

Inserting and Removing the PowerPack battery (see figure E)

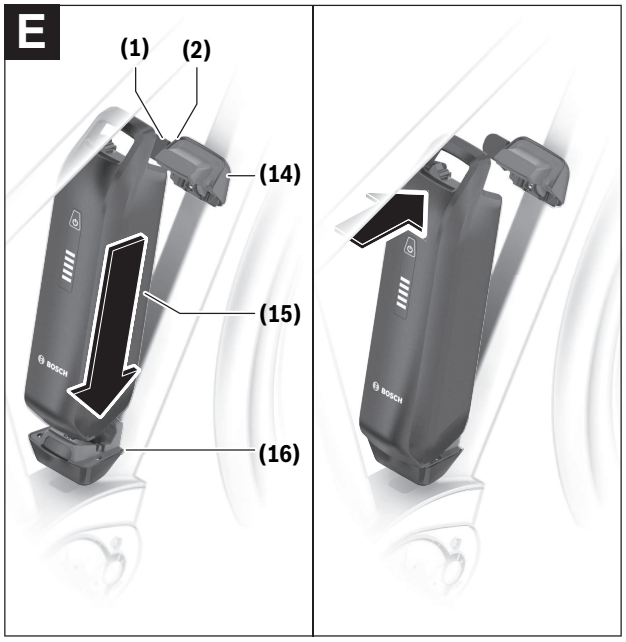

In order to insert the battery, the key **(1)** must not be inserted in the lock **(2)**.

To **insert** the PowerPack battery **(15)**, place it so that its contacts are in the lower holder **(16)** on the eBike. Tilt it into the upper holder **(14)** as far as possible until you hear it click into place.

Check that the battery is secure in all directions.

Do not ride with the key **(1)** inserted. Make sure that the key is no longer inserted when you park the eBike.

To **remove** the PowerPack battery **(15)**, switch it off and open the lock **(2)** using the key **(1)**.

Tilt the battery out of the upper holder **(14)** and pull it out of the lower holder **(16)**.

Operation

Start-up

- ▸ **Use only original Bosch batteries that the manufacturer has approved for your eBike.** Using other batteries can lead to injuries and pose a fire hazard. Bosch accepts no liability or warranty claims if other batteries are used.

Switching on/off

Switching on the battery is one way to switch on the eBike system. Read and follow the instructions in the operating manuals for the drive unit and on-board computer.

Before switching on the battery, i.e. the eBike system, make sure that the lock **(2)** is closed.

To **switch on** the battery, press the on/off button **(7)**. Do not use sharp or pointed objects to press the button. The LEDs on the indicator **(6)** will light up, indicating the battery's state of charge at the same time.

- ▸ **Always check that the battery pack is locked in place.** To do this, pull on the battery pack (after the key has been removed).

Note: If the battery capacity is less than 5 %, none of the LEDs on the battery charge indicator **(6)** will light up. Whether the eBike system is switched on is only visible on the on-board computer/control unit.

To **switch off** the battery, press the on/off button **(7)** again. The LEDs on the indicator **(6)** go out. This will also switch the eBike system off.

If no power is drawn from the eBike drive for about **10** minutes (e.g. because the eBike is not moving) and no button is pressed on the on-board computer or the control unit of the eBike, the eBike system will switch off automatically.

The battery is protected against deep discharge, overloading, overheating and short-circuiting by the Battery Management System (BMS). In the event of danger, a protective circuit switches the battery off automatically.



If a fault is detected in the battery, two of the LEDs on the battery charge indicator **(6)** will flash. Contact an authorized bicycle dealer if this happens.

Behavior in the event of a fault

The Bosch eBike battery must not be opened, even for repairs. There is a risk that the Bosch eBike battery could catch fire, e.g. due to a short circuit. This risk arises if a Bosch eBike battery which has **already** been opened is reused at a later point in time.

Therefore, do not repair the Bosch eBike battery in the event of a fault, but have it replaced with an original Bosch eBike battery by your specialist retailer.

Transport

⚠ WARNING

- ▸ **Always remove the battery pack from the bicycle before transporting the bicycle on a vehicle bike rack.** Failure to remove the battery pack when using a vehicle bike rack can lead to death or serious injury. The battery may detach during transport and cause an accident to following vehicles.
- ▸ **Always use an approved and compatible bicycle rack when transporting your eBike. The Bosch drive system adds weight to the bicycle.** Refer to your bicycle rack manual to be sure your eBike is compatible. Overloading a bike rack can result in death or serious injury.
- ▸ **Use proper lifting techniques as electric bikes are generally heavier than bicycles.**

Ship batteries only when the housing is undamaged. Tape or mask off open contacts and pack up the battery in such a manner that it cannot move around in the packaging. Inform your parcel service that the package contains dangerous goods. Please also ob-

serve possibly more detailed national regulations. Always check state and federal regulations before attempting to ship your battery.

If you have any questions about transporting the batteries, contact an authorized bicycle dealer. You can also order suitable transport packaging from the dealer.

Maintenance/cleaning

⚠ WARNING

- **Do not open any of the components. Service should only be carried out at an authorized Bosch eBike dealer.** Failure to follow above warning can cause death or serious injury. Refer to your bicycle manual or component manual for all non-Bosch drive system components.
- **Always remove the battery pack before performing any bicycle inspection, maintenance or repair.** Failure to remove the battery pack before performing bicycle inspection, maintenance or repair can lead to serious injury.
- **If replacing your battery, buy only a genuine Bosch battery pack from an approved source. See your Bosch eBike dealer for original Bosch parts.**
- **Always switch the battery pack off, when inserting or removing it from the holder.** Never attempt to insert or remove the battery pack while riding the bike.
- **Do not charge or use your eBike in any area with a potentially explosive atmosphere, such as at a fueling area, or in areas where the air contains chemicals or particles (such as grain, dust, or metal powders).** Obey all signs and instructions.
- **Do not submerge your eBike components in water, or wash with pressurized hose.** Your Bosch drive unit is designed to be water tight to rain water or non-pressure hose washing.
- **Note down the manufacturer and the number of the key.** In case of loss of the keys, please refer to an authorised Bosch eBike dealer. Please provide the name of the manufacturer and the number of the key.
- **Do not paint any components of the Bosch drive system as they may cause premature failure of the component.**

After-sales service and advice on using products

If you have any questions about the eBike system and its components, contact an authorized bicycle dealer.

For contact details of authorized bike dealerships, please visit www.bosch-ebike.com.

Please contact an authorized bicycle dealer if the battery is no longer working.

Cleaning

- **Do not submerge your eBike components in water, or wash with pressurized hose.** Your Bosch drive unit is designed to be water tight to rain water or non-pressure hose washing.

Keep all components of your eBike clean, especially the battery-pack contacts and corresponding holder contacts. All components including the drive unit may not be immersed in water or cleaned with a high-pressure cleaner. Clean them carefully with a soft, damp cloth (using only mild soap and water).

Storing

The service life of the battery can be extended if it is looked after well and especially if it is stored at the correct temperature.

As it ages, however, the capacity of the battery will diminish, even with good care.

A significantly reduced operating period after charging indicates that the battery pack is worn out and

must be replaced. You can replace it yourself by purchasing a genuine Bosch PowerPack from an authorized Bosch eBike dealer.

Recharging the battery before and during storage

When you are not going to use the battery for an extended period (longer than three months), store it at a state of charge of around 30 % to 60 % (when two to three of the LEDs on the battery charge indicator **(6)** are lit).

Check the state of charge after six months. If only one of the LEDs on the battery charge indicator **(6)** is lit, charge the battery back up to around 30 % to 60 %.

Note: If the battery is stored with no charge for an extended period of time, it may become damaged despite the low self-discharge and the battery capacity could be significantly reduced.

Leaving the battery permanently connected to the charger is not recommended.

Storage conditions

If possible, store the battery in a dry, well-ventilated place. Protect it against moisture and water. When the weather conditions are bad, it is advisable to remove the battery from the eBike and store it in a closed room until you use it next, for example.

Store the eBike batteries in the following locations:

– In a room with a smoke alarm
– Away from combustible or easily flammable objects
– Away from heat sources

For an optimum service life, store the eBike battery at temperatures between **50 °F** and **68 °F**. Never store it at temperatures below **14 °F** or above **140 °F**.

Make sure that the maximum storage temperature is not exceeded. Do not leave the battery in your car in the summer, for example, and store it away from direct sunlight.

Leaving the battery on the bicycle for storage is not recommended.

Troubleshooting

Cause	Corrective measures
 Battery defective	**Two LEDs flash on the battery.** Contact an authorized bike dealership.
 Battery too warm or too cold	**Three LEDs flash on the battery.** Disconnect the battery from the charger until the charging temperature range has been reached. Do not reconnect the battery to the charger until it has reached the correct charging temperature.
 The charger is not charging.	**No LEDs flashing (one or more LEDs will remain permanently lit depending on the state of charge of the eBike battery).** Contact an authorized bike dealership.
Charging not possible (no indicator on battery)	
Connector not attached properly	Check all connections.
Battery contacts dirty	Carefully clean the battery contacts.
Socket outlet, cable or charger defective	Check the mains voltage, have the charger checked over by a bike dealership.
Battery defective	Contact an authorized bike dealership.

Battery Recycling Program

The drive unit, on-board computer incl. operating unit, battery, speed sensor, accessories and packaging should be disposed of in an environmentally correct manner.

Do not dispose of eBikes and their components with household waste.

Tape or mask off the contact surfaces of the battery pack's terminals with adhesive tape before disposing of battery packs.

Do not touch severely damaged eBike batteries with your bare hands – electrolyte may escape and cause skin irritation. Store the defective battery in a safe location outdoors. Cover the terminals if necessary and inform your dealer. They will help you to dispose of it properly.



You may recycle your Bosch battery pack by calling 1.800.822.8837.

PowerPack

0 275 U07 3P3 (2022.06) T / 3

www.bosch-ebike.com

Robert Bosch GmbH
72757 Reutlingen
Germany

BOSCH

English

Dear customers,
changes have been made relating to the operating instructions
US: 0 275 U07 3PX (2022.05). In deviation to the specifications on the cover and in the technical data, the following currently applies:
The following product version of the PowerPack rechargeable battery are added:

Product name	Product code
PowerPack 545	**BBP3556**
PowerPack 725	**BBP3575**

The product versions of the PowerPack rechargeable battery already contained in the operating instructions are not yet available. The schematic representation as well as the information on handling are correct and also apply to the added product versions.

Technical Data

The following technical data currently applies:

Li-ion battery		PowerPack 545	PowerPack 725
Product code		BBP3556	BBP3575
Rated voltage	V=	36	36
Nominal capacity	Ah	14,4	19,2
Energy	Wh	545[A)]	725[A)]
Operating temperature	°F	23 to 104	23 to 104
Storage temperature	°F	50 to 104	50 to 104
Permitted charging temperature range	°F	32 to 104	32 to 104
Weight, approx.	lbs	6.6	8.8
Protection rating		IP54	IP54

A) Advertised battery energy capacity is an approximation. Due to manufacturing tolerances measured capacity may not always match the advertised capacity.

Note: You can find more information in the service area of the official website:
http://www.bosch-ebike.com.
Thank you for your understanding!

Robert Bosch GmbH
72757 Reutlingen
Germany

www.bosch-ebike.com

0 275 U07 3PX (2022.06) T / 62

Owner’s Manual – The Bosch Drive System Charger

BPC3410



en Original operating instructions

This manual contains important safety, performance and service information. Read and understand it along with the information provided to you by your bicycle manufacturer before using the product, and keep it for reference.

Table of Contents

Introduction 2
About Warnings 2
General Warnings 2
Using your Manual 3
On-Product Warning Labels Charger 4
Operating the Charger 5
Safety Instructions 5
Product Description and Specifications 7
Operation 9
Maintenance/cleaning 11
Troubleshooting 12
Battery Recycling Program 13

Introduction

About Warnings

This manual contains many **DANGER**, **WARNING**, and **CAUTION** indicators concerning the consequences of failure to use, assemble, maintain, store, inspect and dispose of a Bosch-equipped eBike in a safe manner.

– The combination of the safety alert symbol and the word **DANGER** indicates a hazardous situation that, if not avoided, will result in death or serious injury.
– The combination of the safety alert symbol and the word **WARNING** indicates a hazardous situation that, if not avoided, could result in death or serious injury.
– The combination of the safety alert symbol and the word **CAUTION** indicates a hazardous situation that, if not avoided, could result in minor or moderate injury.

General Warnings



Read all safety warnings and all instructions. Failure to follow the warnings and instructions may result in death or serious injury.

Save all safety warnings and instructions for future reference.

The term **battery pack** used in these operating instructions refers to all original Bosch eBike battery packs.

▶ **Read ALL accompanying manuals before riding the bike for the first time.** Your Bosch Drive System comes with additional manuals and documents provided by the manufacturer of the bicycle and other components. Failure to read and understand safety information can result in death or serious injury.

⚠ WARNING

▶ **This manual contains important safety, performance and service information.** Read it before you take the first ride on your new bicycle, and keep it for reference. The manual can also be found online at www.bosch-ebike.com.

▶ **This manual is intended to be read together with the separate user manual provided with your bicycle.** Be sure to read all provided documents including labels on the product before your first ride.

▶ **Take responsibility for your own SAFETY.** If you have any questions or do not understand something, consult with your dealer or the bicycle or component manufacturer.

▶ **Some eBike accessories may present a choking hazard to small children.** Keep these accessories away from children.

⚠ CAUTION

▶ **The Bosch Drive System adds weight to your bicycle which you may not be used to lift.** Avoid injury, use proper lifting techniques.

Using your Manual

In addition to the functions outlined here, changes to software relating to troubleshooting and functional modifications may be introduced at any time.

Graphics

The bicycle shown in this manual may differ slightly from your bicycle, but will be similar enough to help you understand our instructions.

RIGHT-HAND and LEFT-HAND sides are determined by facing in the direction the bicycle will travel when going forward. When you see a broken line (------), the item referred to is hidden from view.

On-Product Warning Labels Charger

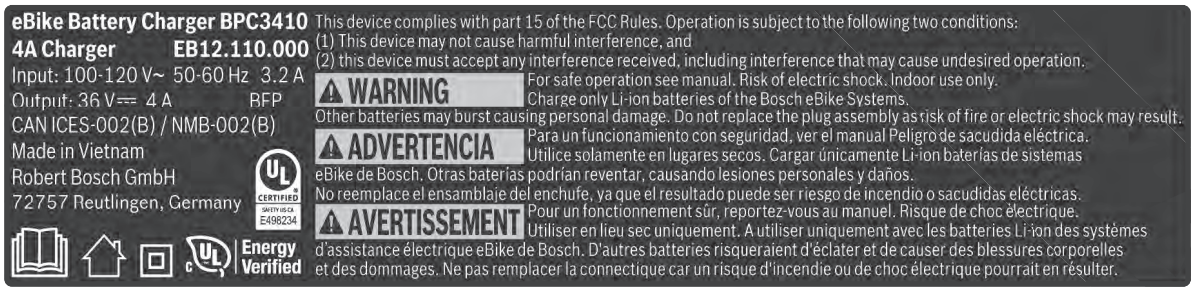

A short version of important safety warnings in English, French and Spanish with the following content can be found on the bottom side of the charger (marked with number **(4)** in the representation on the graphics page):

- For safe operation, see manual.
- Risk of electric shock
- Indoor use only
- Charge only batteries for the Bosch eBike Systems. Other batteries may burst causing personal damage.
- Do not replace the plug assembly as risk of fire or electric shock may result.

Operating the Charger

Safety Instructions

IMPORTANT SAFETY INSTRUCTIONS SAVE THESE INSTRUCTIONS –

This manual contains important safety and operating instructions for this battery charger.

- Before using battery charger, read all instructions and cautionary markings on battery charger, battery, and product using battery.

⚠ CAUTION

- **To reduce risk of injury, charge only batteries of the Bosch eBike Systems.** Other types of batteries may burst causing personal injury and damage.



- **Read and understand all safety warnings and instructions.** Failure to follow the below warnings could result in death or serious injury.

Save all safety warnings and instructions for future reference.

The term **battery pack** used in these operating instructions refers to all original Bosch eBike battery packs.

⚠ DANGER

- **Only charge eBike-approved Bosch lithium-ion battery packs. The battery pack voltage must match the battery pack charging voltage of the charger.** Otherwise, there is risk of fire and explosion.
- **Carefully cover the charging socket with the flap after charging the eBike.** This ensures that no dirt or water gets in.



Do not expose the charger to rain or wet conditions. If water enters a charger, there is a risk of electric shock.

⚠ WARNING

- **Use only the original Bosch battery charger supplied with your eBike or one approved for your eBike by the manufacturer and purchased from a trusted source.** Bypassing the battery charger or the use of a non-approved or counterfeit battery charger can lead to death or serious injury.
- **Keep the battery charger clean.** Contamination can lead to the risk of an electric shock. Clean only with the use of a damp cloth (mild soap/water).
- **Always check the charger, cable and plug before use. Stop using the charger if you discover any damage. Do not open the charger.** Damaged chargers, cables and plugs increase the risk of electric shock.
- **Do not operate the charger on an easily ignited surface (e.g. paper, textiles, etc.) or in a flammable environment.** There is a risk of fire due to the charger heating up during operation.
- **Take care if you touch the charger while it is charging. Wear protective gloves.** The charger can get very hot, especially when the ambient temperature is high.
- **The battery may give off fumes if it becomes damaged or is used incorrectly. Ensure the area is well ventilated and seek medical attention should you experience any adverse effects.** These fumes may irritate the respiratory tract.
- **The eBike battery must not be left unattended while charging.**
- **Batteries must not be subjected to mechanical shock.** There is a risk of the battery being damaged.
- **Keep the battery charger away from children.** This will ensure that children do not play with the charger.
- **Persons who are not capable of safely operating the charger because of their physical, sensory or mental limitations, or because of their lack of experience or knowledge, may only use this**

charger under supervision or after having been instructed by a responsible person. Otherwise, there is a risk of operating errors and injuries.

- ▶ **Read and observe the safety warnings and instructions in all operating instructions of the eBike system and your eBike.**

NOTICE: This device complies with part 15 of the FCC Rules. Operation is subject to the following two conditions:

1. This device must not cause harmful interference, and
2. this device must accept any interference received, including interference that may cause undesired operation.

NOTICE: Changes or modifications made to this equipment not expressly approved by the Robert Bosch GmbH may void the FCC authorization to operate this equipment.

NOTE: This equipment has been tested and found to comply with the limits for a Class B digital device, pursuant to Part 15 of the FCC Rules. These limits are designed to provide reasonable protection against harmful interference in a residential installation. This equipment generates, uses and can radiate radio frequency energy and, if not installed and used in accordance with the instructions, may cause harmful interference to radio communications. However, there is no guarantee that interference will not occur in a particular installation. If this equipment does cause harmful interference to radio or television reception, which can be determined by turning the equipment off and on, the user is encouraged to try to correct the interference by one or more of the following measures:

- – Reorient or relocate the receiving antenna.
- – Increase the separation between the equipment and receiver.
- – Connect the equipment into an outlet on a circuit different from that to which the receiver is connected.
- – Consult the dealer or an experienced radio/TV technician for help.

Responsible party:
Bosch eBike Systems Americas
Robert Bosch LLC
27211 Burbank, Foothill Ranch, CA 92610, USA,
www.bosch-ebike.com/us/

Product Description and Specifications

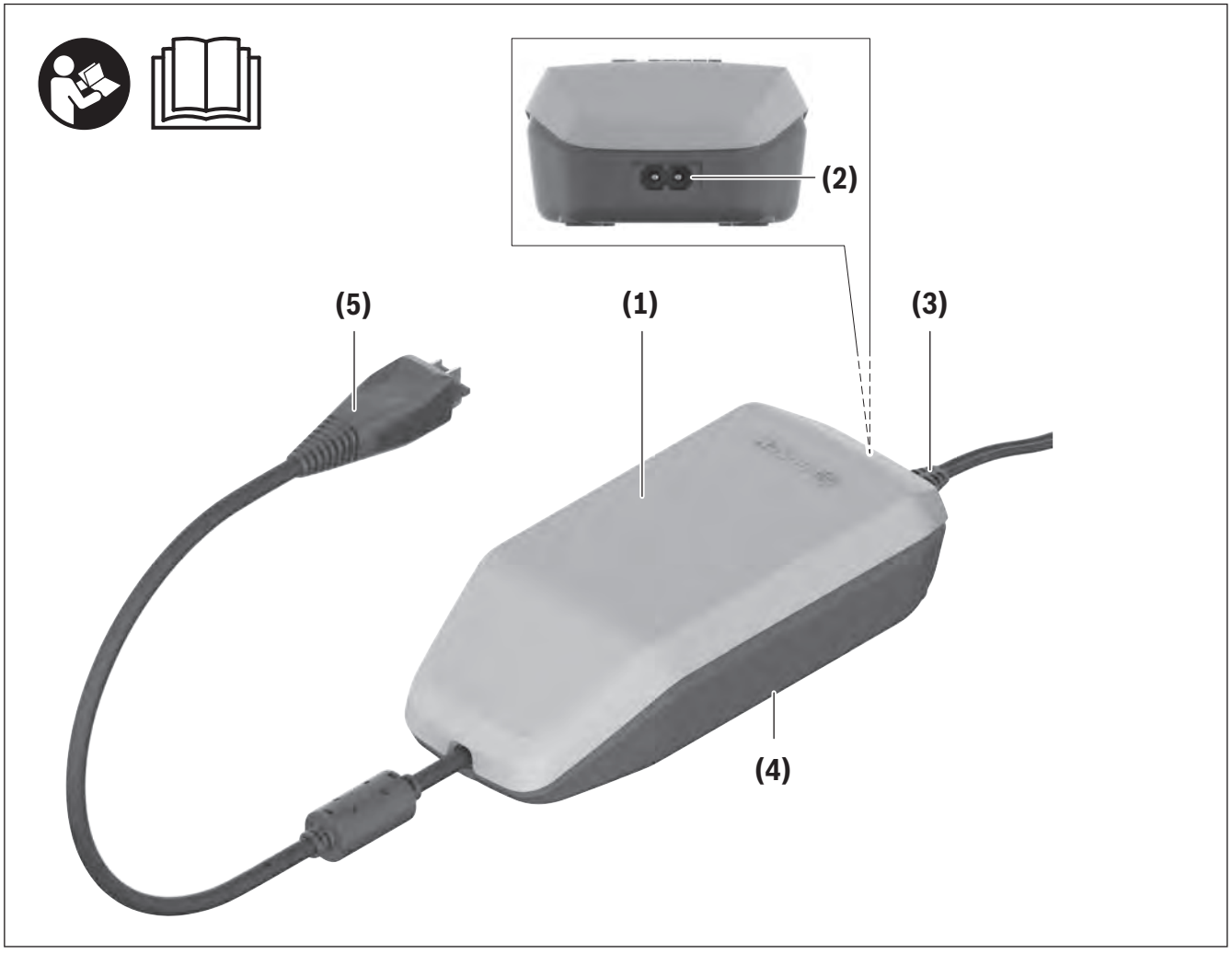

Product Features

(1) Charger
(2) Device socket
(3) Device connector
(4) Charger safety instructions
(5) Charging connector

Intended Use

In addition to the functions outlined here, changes to software relating to troubleshooting and functional modifications may be introduced at any time.

The Bosch eBike chargers are intended exclusively to charge eBike batteries and must not be used for any other purpose.

The Bosch eBike charger depicted here is compatible with Bosch eBike batteries from the new system generation **the smart system**.

Technical data

Charger		**4A charger**
Product code		BPC3410
Input voltage	V~	100–120
Frequency	Hz	50–60
Rated voltage of the rechargeable battery	V=	36
Charging current (max.)	A	4
Charging time for PowerTube 750 approx.[A)]	h	6
Charging time for PowerPack 400 approx.[A)]	h	3.5
Operating temperature	°F	32 to 104
Storage temperature	°F	50 to 104
Weight, approx.	lb	1.5
Protection rating		IP40

A) You can find the charging times for additional batteries at: http://www.bosch-ebike.com

Power cable		
Article number		1 270 020 343
Rated voltage – cables	V~	300
Rated voltage – connectors/plug-in connectors	V~	125
Rated current – connectors/plug-in connectors	A	10
Material – cables		PVC
Safety standard – cables		UL 62
Safety standard – connectors/plug-in connectors		UL 817
Length, approx.	ft	6

With regard to electromagnetic compatibility (EMC), the charger is classified as a table-top device.

Operation

Start-up

Connecting the charger to the mains

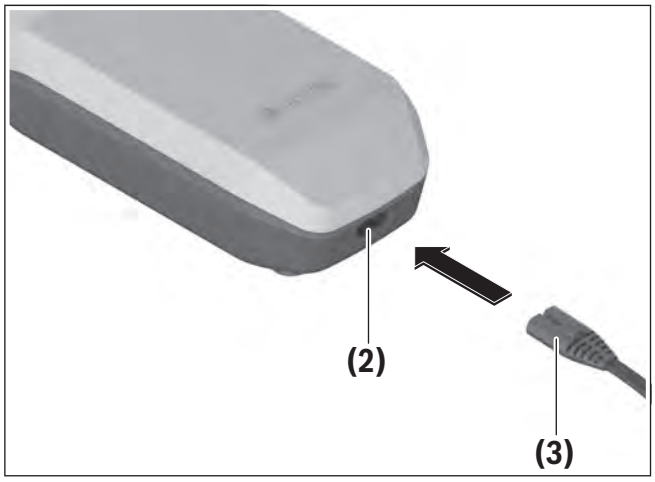

(2) Device socket

(3) Device connector

- **Note the household voltage!** The voltage of the power supply must correspond to the specifications given on the battery charger nameplate.

Plug the device connector **(3)** of the power cable into the device socket **(2)** on the charger.

Connect the power cable (country-specific) to the mains.

Use only the supplied input connection: standard AC power cord (**(3)** in the diagram) when connecting to the household electrical supply.

Charging the battery when removed

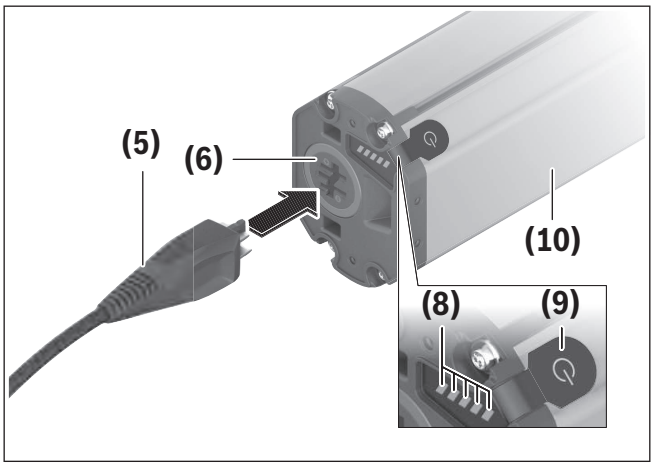

(5) Charging connector

(6) Socket for charging connector

(8) Operation/battery charge indicator

(9) On/off button for battery

(10) PowerTube

Switch the battery off and remove it from its holder on the eBike. When doing so, read and observe the operating instructions of the battery.

- **Ensure the battery is placed on clean surfaces only.** Avoid getting dirt, e.g. sand or soil, in the charging socket and contacts in particular.

Plug the charging connector **(5)** of the charger into the socket **(6)** on the battery.

Charging the battery when inserted in the bicycle

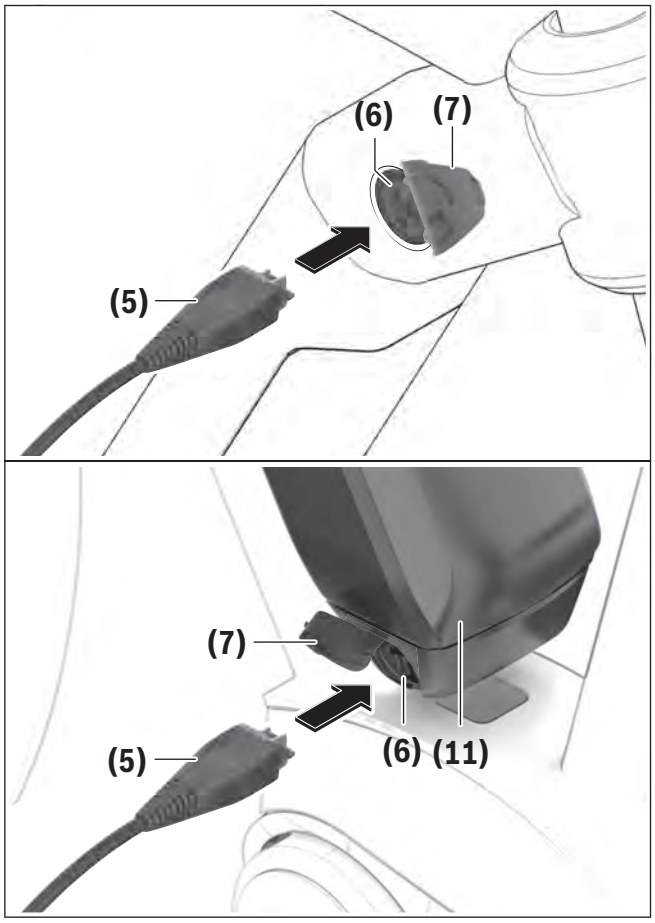

(5) Charging connector
(6) Socket for charging connector
(7) Charging socket cover
(11) PowerPack

Switch the battery off. Clean the cover of the charging socket **(7)**. Avoid getting dirt, e.g. sand or soil, in the charging socket and contacts in particular. Lift the cover of the charging socket **(7)** and plug the charging connector **(5)** into the charging socket **(6)**.

- ▸ **There is a risk of fire due to the charger heating up during charging. Ensure the battery on the bike is completely dry and placed on a fireproof surface before charging.** If this is not possible, remove the battery from the holder and charge it in a more suitable location. When doing so, read and observe the operating instructions of the battery.

Charging process

The charging process begins as soon as the charger is connected to the battery or charging socket on the bike and to the mains.

Note: The charging process is only possible when the temperature of the eBike battery is within the permitted charging temperature range.

Note: The drive unit is deactivated during the charging process.

The battery can be charged with or without the on-board computer. When charging without the on-board computer, the charging progress can be observed via the battery charge indicator.

When the on-board computer is connected, a charging notification appears on the display.

The state of charge is displayed by the battery charge indicator **(8)** on the battery and by the bars on the on-board computer.

The LEDs on the battery charge indicator **(8)** will flash during the charging process. Each solid illuminated LED represents approximately 20 % of the charging capacity. The flashing LED indicates the next 20 % currently charging.

Once the eBike battery is fully charged, the LEDs extinguish immediately and the on-board computer is switched off. The charging process is terminated. The state of charge can be displayed for **5** seconds by pressing the on/off button **(9)** on the eBike battery.

Disconnect the charger from the mains and the battery from the charger.

When the battery is disconnected from the charger, the battery is automatically switched off.

Note: If you have charged the battery on the bike, carefully close the charging socket **(6)** with the cover **(7)** after charging, so that no dirt or water can get in.

If the charger is not disconnected from the battery after charging, the charger will switch itself back on after a few hours, check the state of charge of the battery and begin the charging process again if necessary.

Maintenance/cleaning

⚠ WARNING

- ▶ **Do not open any of the components. Service should only be carried out at an authorized Bosch eBike dealer.** Failure to follow above warning can cause death or serious injury. Refer to your bicycle manual or component manual for all non-Bosch drive system components.
- ▶ **Do not charge or use your eBike in any area with a potentially explosive atmosphere, such as at a fueling area, or in areas where the air contains chemicals or particles (such as grain, dust, or metal powders).** Obey all signs and instructions.
- ▶ **Do not submerge your eBike components in water, or wash with pressurized hose.** Your Bosch drive unit is designed to be water tight to rain water or non-pressure hose washing.
- ▶ **Do not paint any components of the Bosch drive system as they may cause premature failure of the component.**

After-sales service and advice on using products

If you have any questions about the eBike system and its components, contact an authorized bicycle dealer.

For contact details of authorized bike dealerships, please visit www.bosch-ebike.com.

Please contact an authorized bicycle dealer if the battery is no longer working.

Troubleshooting

Cause	Corrective measures
 Battery defective	**Two LEDs flash on the battery.** Contact an authorized bike dealership.
 Battery too warm or too cold	**Three LEDs flash on the battery.** Disconnect the battery from the charger until the charging temperature range has been reached. Do not reconnect the battery to the charger until it has reached the correct charging temperature.
 The charger is not charging.	**No LEDs flashing (one or more LEDs will remain permanently lit depending on the state of charge of the eBike battery).** Contact an authorized bike dealership.
Charging not possible (no indicator on battery)	
Connector not attached properly	Check all connections.
Battery contacts dirty	Carefully clean the battery contacts.
Socket outlet, cable or charger defective	Check the mains voltage, have the charger checked over by a bike dealership.
Battery defective	Contact an authorized bike dealership.

Battery Recycling Program

The drive unit, on-board computer incl. operating unit, battery, speed sensor, accessories and packaging should be disposed of in an environmentally correct manner.

Do not dispose of eBikes and their components with household waste.



You may recycle your Bosch battery pack by calling 1.800.822.8837.

Robert Bosch GmbH
72757 Reutlingen
Germany

www.bosch-ebike.com

0 275 U07 3CX (2022.03) T / 43

CONTACT

Addres and telephone number:

Trek US
Customer Service
801 W Madison street,
Waterloo, Wisconsin 53594
USA

Telephone number: 920.478.4678
Internet: www.trekbikes.com

Electra Bicycle Company
364 2nd Street,
Encinitas,
CA 92024
USA

Telephone number: 1.800.261.1644
Internet: www.electrabike.com

Limited warranty
Your bicycle is covered by a Lifetime Limited Warranty. Please visit our web site for details.
For Service and Warranty, please contact your local dealer.

Please refer to the website (Menu/Support) for the latest revision of this manual.
New features, as described in the latest manual, may not be applicable on your electric bike.

TK23 Bosch The Smart System BS3 EN-US (28 mph) Rev. 1
October 2022 © 2022 Trek Bicycle Corporation. All rights reserved.

TK23 Bosch The Smart System BS3 EN-US (28 mph) Rev. 1
October 2022