

2022 CHECKPOINT SL/SLR

SERVICE MANUAL

Contents



Safety



Brake/shift routing — mechanical



Brake routing — eTap

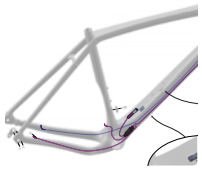

Brake/shift routing — Di2



T47 bottom bracket



Headset and fork



IsoSpeed — SL



IsoSpeed — SLR



Storage door



Frame guards



Chainkeeper

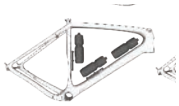

Accessories — SL

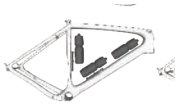

Accessories — SLR



Specifications

Safety

WARNING

Properly tighten hardware

Always tighten hardware to the specified torque. Over-tightening hardware could deform or break the hardware or components. Under-tightening hardware could cause hardware or components to become loose. Either situation could damage the bicycle and result in injury to the rider.

WARNING

Reapply threadlocker

All reused-fasteners with pre-applied threadlocker must be cleaned with isopropyl alcohol and have new thread-locker applied before re-assembly. If threadlocker is not applied, the fasteners may loosen which could damage the bicycle and result in injury to the rider.

Legend



Apply applicable grease



Do not apply grease



Apply threadlocker

Nm Torque

Cable (zip) tie

Copyright 2022 Trek Bicycle Corporation All Rights Reserved

Brake/shift routing — mechanical

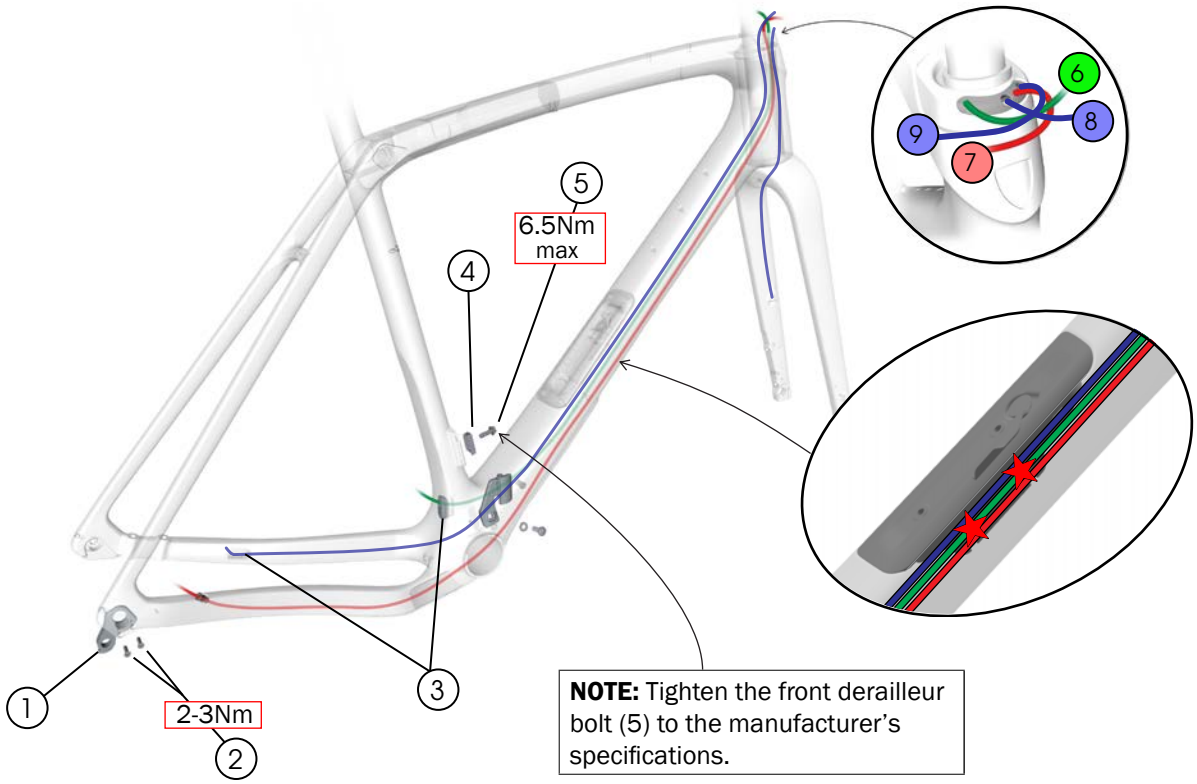

1. Rear derailleur hanger — *W524188*
2. Rear derailleur hanger bolts — *W524884*
3. Housing grommets — *W330578*
4. Front derailleur washer — *W531901*
5. Front derailleur bolt — *W543903*
6. Front derailleur cable
7. Rear derailleur cable
8. Front brake hose
9. Rear brake hose
10. Dropper post cable

Route the brake hoses

1. Connect the calipers to the brake hoses.
2. Route the rear brake hose through the grommet (3). Route both brake hoses as shown.



3. Attach the calipers to the chainstay and fork. Do not fully torque the mounting bolts until the calipers are aligned correctly.

Brake/shift routing — mechanical (continued)

Route the shift cables

1. Label both shift housings. You will need to identify them when you assemble the headset.
2. Attach the derailleurs to the bicycle.
3. Route the front derailleur housing through the grommet (3). Route both shift housings through the frame as shown.

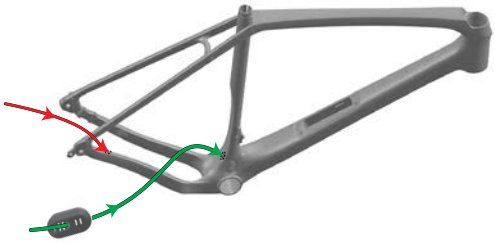

4. Connect the shift housings to the derailleurs. Insert the grommet (3) into the frame.
5. Install the bottom bracket, headset and fork, and handlebars.
6. Cut the cable and brake housings at the levers (make sure you have enough slack).
7. Route the shift cables through the housings in the frame — starting in the front — and attach them to the derailleurs.
8. Use a cable (zip) tie to connect the shift housings and rear brake hose to the outside of the storage door frame.

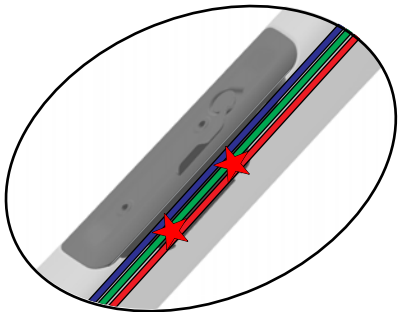

Dropper post cable routing (SL only)

Cut out a hole in the outer dimple on the back of the routing cap grommet. Route the dropper post cable to the handlebars as shown below.

NOTE: A dropper post is not compatible with the SLR model due to the seat mast system.

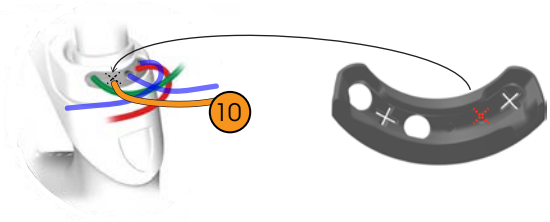

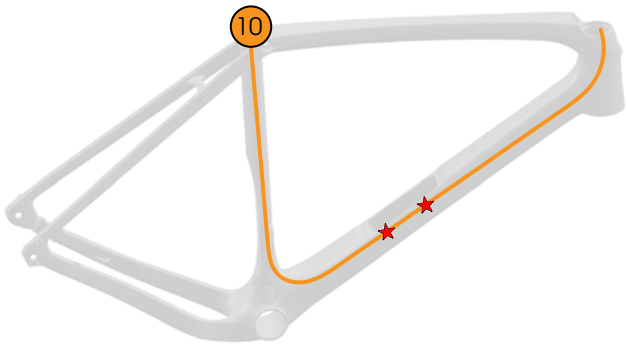

Brake routing — eTap

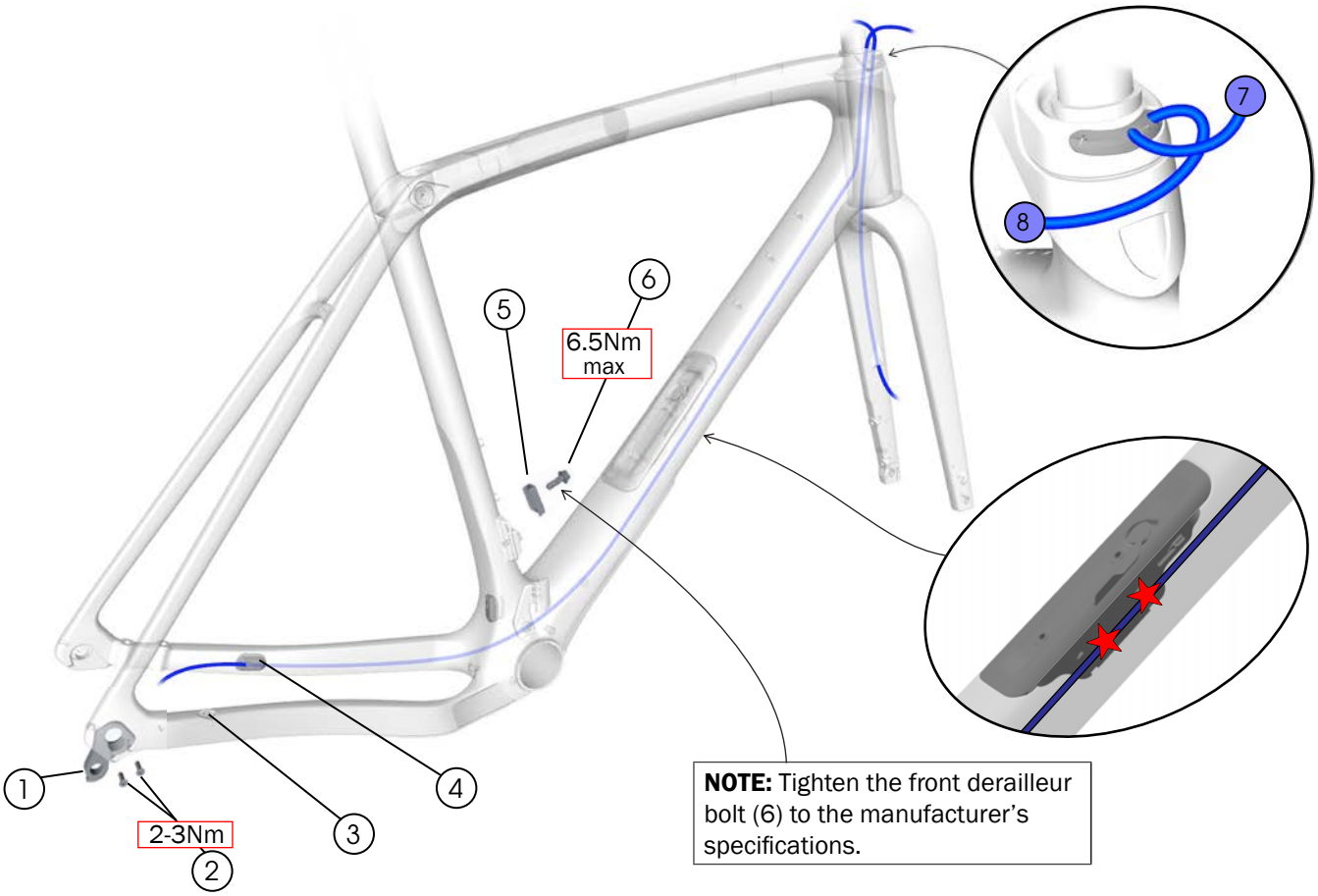

1. Rear derailleur hanger — *W524188*
2. Rear derailleur hanger bolts — *W524884*
3. Exit grommet — *W600209*
4. Housing grommet — *W330578*
5. Front derailleur washer — *W531901*
6. Front derailleur bolt — *W543903*
7. Front brake hose
8. Rear brake hose
9. Dropper post cable

Route the brake hoses

1. Connect the calipers to the brake hoses.
2. Route the rear brake hose through the grommet (4). Route both brake hoses as shown.



3. Attach the calipers to the chainstay and fork. Do not fully torque the mounting bolts until the calipers are aligned correctly.
4. Use a cable (zip) tie connect the rear brake hose to the outside of the storage door frame.

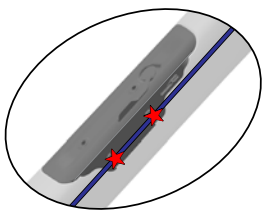

Brake routing — eTap (continued)

Dropper post cable routing (SL only)

NOTE: A dropper post is not compatible with the SLR model due to the seat mast system.



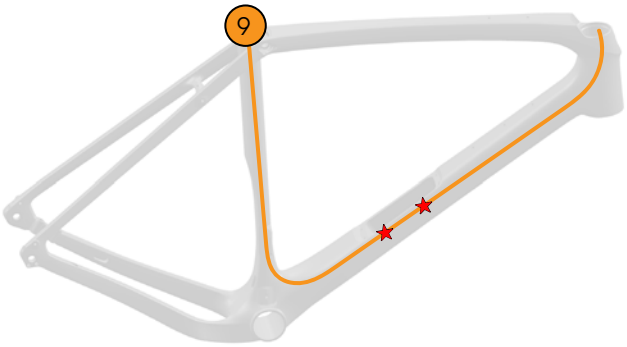

Brake/shift routing — Di2

NOTE: Tighten the front derailleur bolt (6) to the manufacturer's specifications.

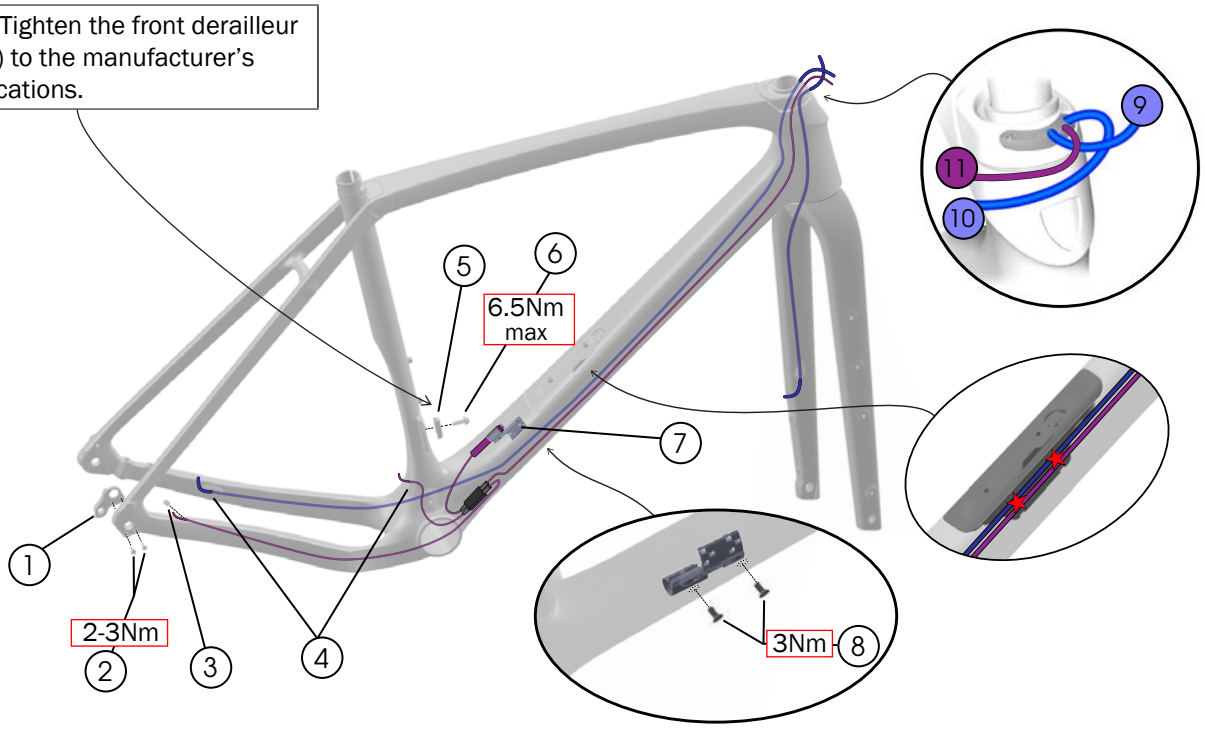

1. Rear derailleur hanger — *W524188*
2. Rear derailleur hanger bolts — *W524884*
3. Di2 exit grommet — *W600208*
4. Housing grommets — *W330578*
5. Front derailleur washer — *W531901*
6. Front derailleur bolt — *W543903*
7. Battery holder and cable guide — *W588188*
8. Screws (M4x9mm) — *W307656*
9. Front brake hose
10. Rear brake hose
11. Di2 wires

Route the brake hoses

1. Connect the calipers to the brake hoses.
2. Route the rear brake hose through the grommet (4). Route both brake hoses as shown.



3. Attach the calipers to the chainstay and fork. Do not fully torque the mounting bolts until the calipers are aligned correctly.

Brake/shift routing — Di2 (continued)

Di2 wiring diagram

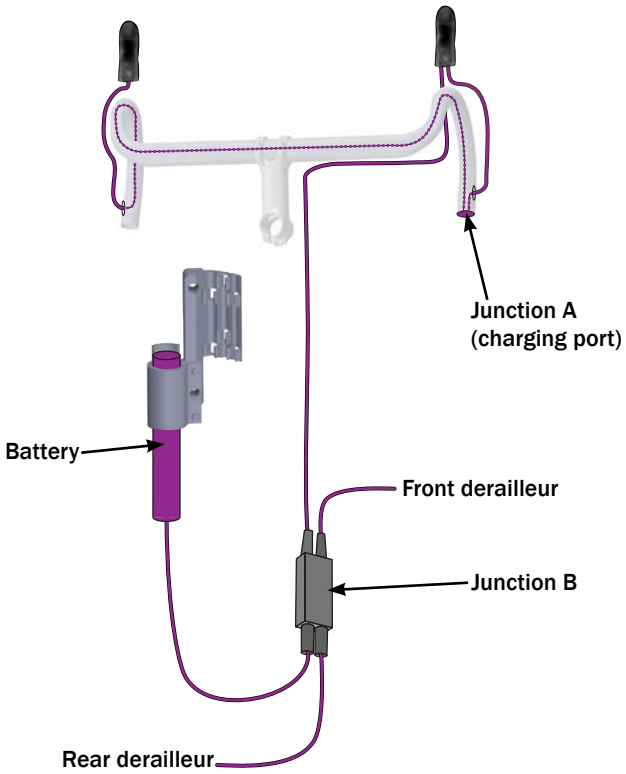

T47 bottom bracket

Install the bottom bracket

1. Apply grease to the threads on both sides of the frame.

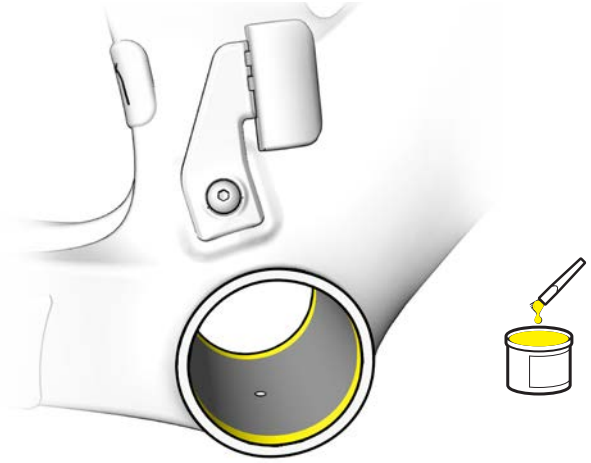

2. Using your hands, thread the bottom bracket onto the frame.

   NOTICE: Do not start tightening the bottom bracket with a tool. Dirt and other contaminants can damage the threading.

3. Use the proper tool to torque both sides to specification (see the Tool and spline compatibility table below).

4. If necessary, add spacers before installing the cranks (see the Spacers required table at the top right).

Spacers required

The table below contains bottom bracket/crank combinations that require spacers. Your bicycle may have other combinations that do not require spacers.

Crank		Bottom bracket	Spacers required	
			Drive side	Non-drive side
Shimano		CeramicSpeed 24mm	0.5mm	0.5mm
SRAM	DUB	SRAM DUB	2-3mm	—
	GXP	Wheels MFG	1.0mm	—

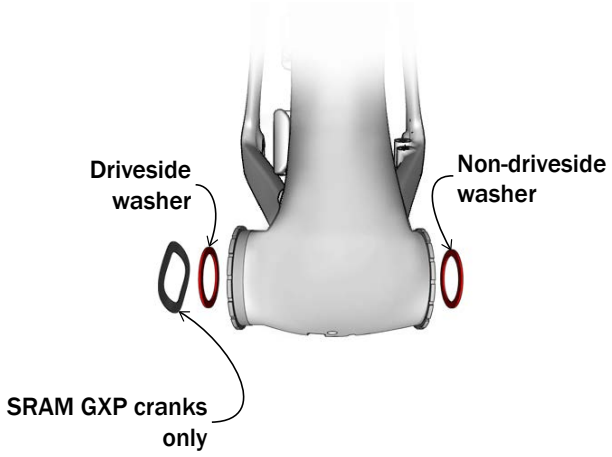

Tool and spline compatibility

			Tool	Praxis		Unior	Park Tool	Wheels Mfg	CeramicSpeed
			Model *Part number*	TP-2400 *594148*	TP-3028 *594147*	1671.T47 *1043614*	BBT-47 *568922*	BBTOOL-48-44 *589307*	—
Bottom bracket manufacturer	Praxis	24mm		X		X			
		30mm			X	X			
	Wheels MFG							X	
	SRAM DUB					X	X		
	Chris King					X	X		
	Ceramic-Speed	24mm				X	X		X
		GXP							X

Headset and fork

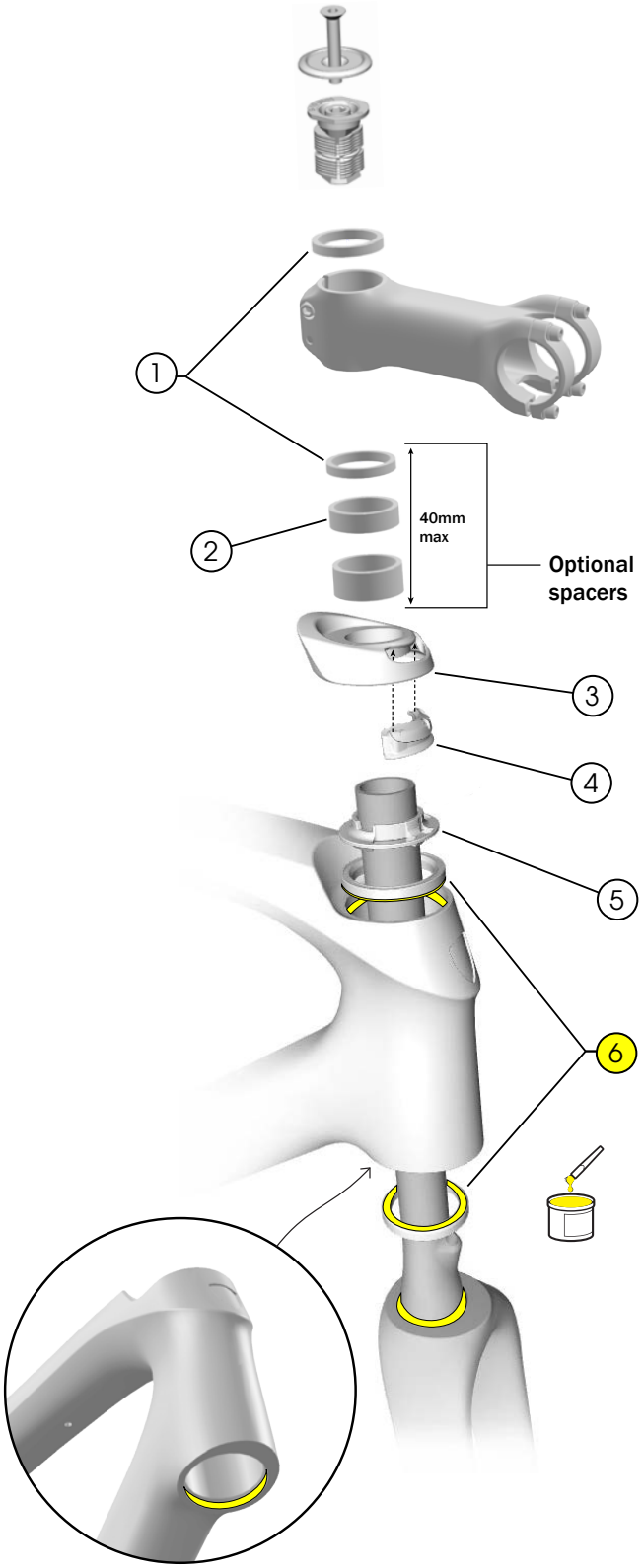

1. Spacer (5mm) — *5253930*
2. Spacer, optional (10mm) — *5253931*
3. Headset routing cap*
4. Headset routing cap grommet — *W5253580*
5. Headset split ring — *W5266050*
6. Headset bearings — *W540243*

**This is a color-matched part — search trekbikes.com to find the right color for your bike.*

Install the headset

1. Clean the steerer tube using isopropyl alcohol.
2. Grease both bearings (6), the fork crown race, and both head tube bearing bores (upper and lower) as shown to the left.
3. Insert the fork into the head tube.

   TIP: Support the fork with a table during the assembly.
4. Route the shift housings and brake hoses through the split ring (5) as shown below (see pages 2-7 for different routing examples).

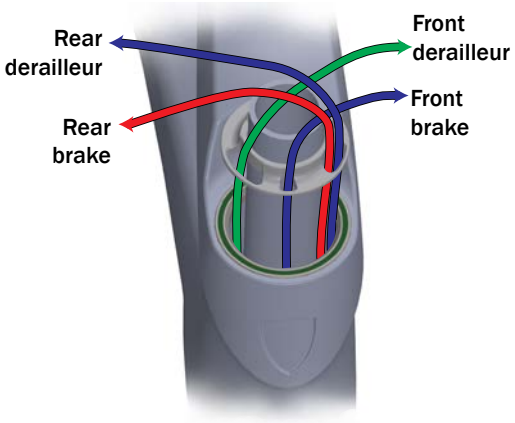

Mechanical routing example

5. Complete the headset assembly as shown to the left.

Cutting the steerer tube

If cutting the steerer tube, cut flush or slightly above the top of the stem (this helps hold the 5mm spacer above in place).

NOTE: Before cutting, make sure the stem is set to the final desired stack position.

IsoSpeed — SL

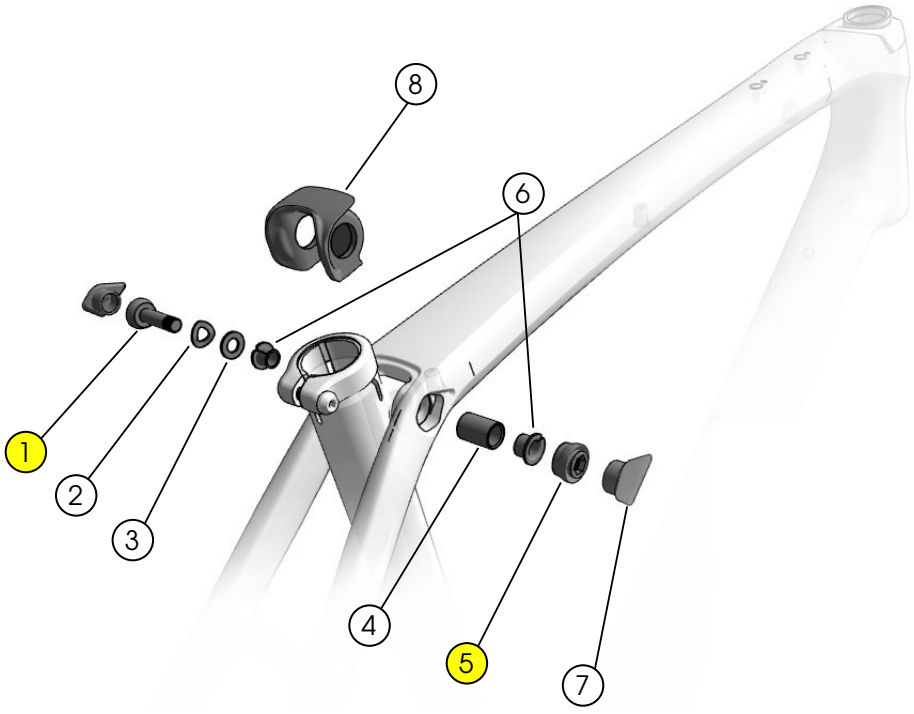

- 1 Bolt
- 2 Wave washer
- 3 Washer
- 4 Cylindrical bushing
- 5 Nut

kit W569265

- 6 Flanged bushings — *W561683*
- 7 IsoSpeed covers*
- 8 Grommet — *W5253578*

**This is a color-matched part — search trekbikes.com to find the right color for your bike.*

Service the IsoSpeed

1. Carefully remove the IsoSpeed covers (7) with a paint-safe plastic pry bar.
2. Remove the bolt (1), nut (6), and washers.
3. Use a 50/50 isopropyl alcohol/water mix to clean the nut threads (6), bolt threads (1), and the inside of the bushings (4, 5).
4. Apply threadlocker to the nut threads.

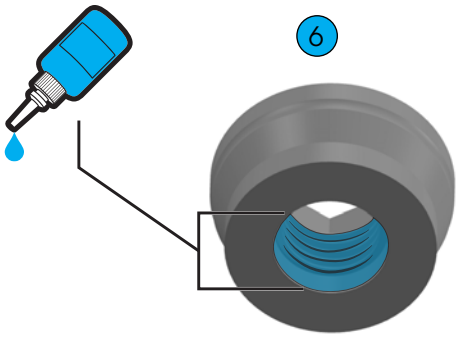

IsoSpeed — SL (continued)

5. Apply grease to the bolt and nut as shown below. Do not apply grease to the threads.

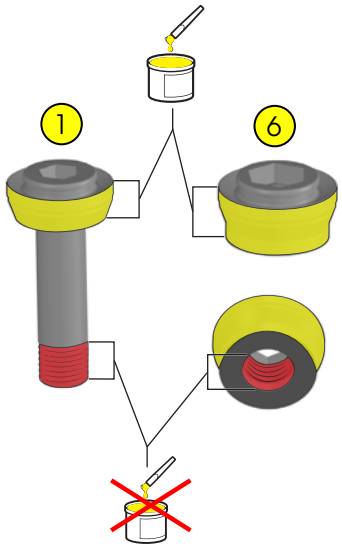

6. Place the washers on the bolt. Tighten the nut to 10Nm while securing the bolt with a wrench as shown below.

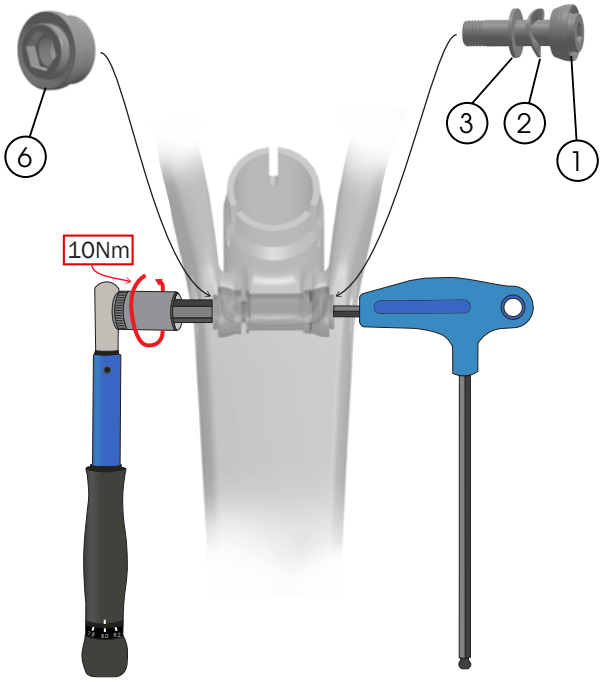

7. Reinstall the IsoSpeed covers.
8. Allow the assembly to cure for 24 hours at room temperature (72°F/22°C).

IsoSpeed — SLR

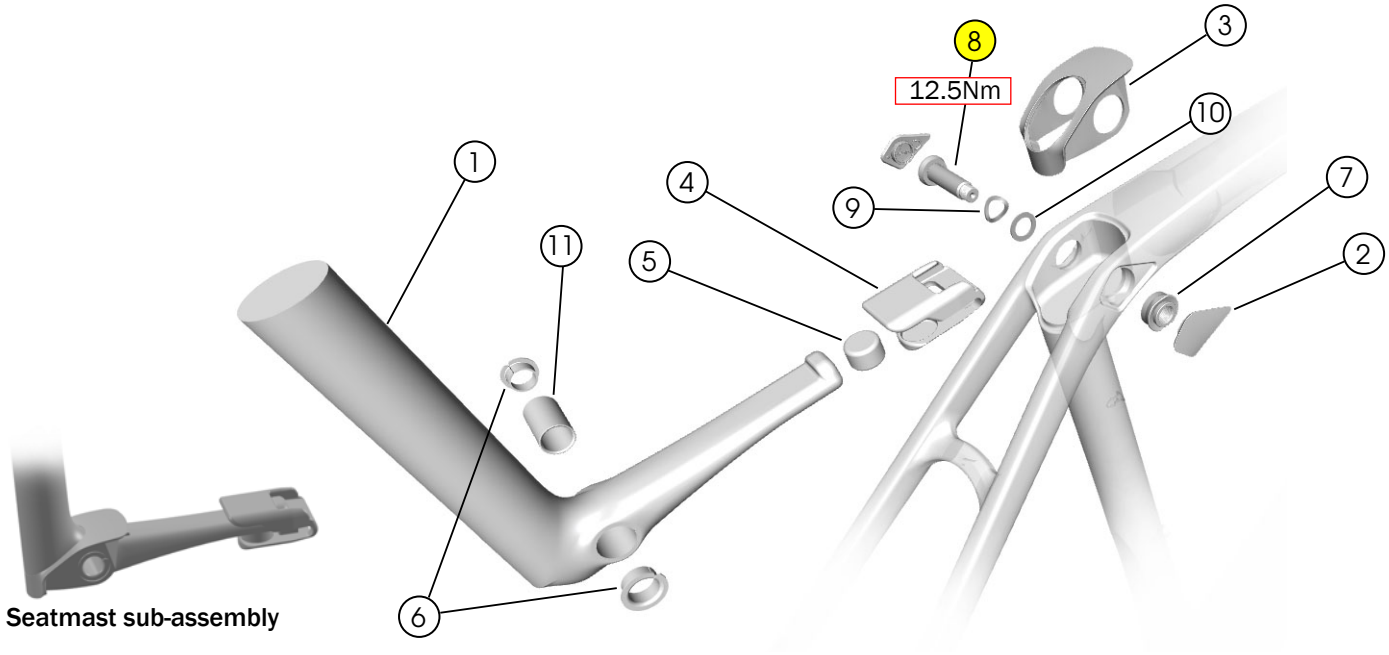

Seatmast sub-assembly

1. Seatmast
2. IsoSpeed covers*
3. Grommet — W5256901
4. Clip — *W5256902*
5. Bumper — *W5256904*
6. Flanged bushings — *W5256074*
7. Nut
8. Bolt
9. Wave washer
10. Flat washer
11. Cylindrical bushing

kit 5271110

**This is a color-matched part — search trekbikes.com to find the right color for your bike.*

Service the IsoSpeed

1. Carefully remove the IsoSpeed covers (2) with a paint-safe plastic pry bar.
2. Remove the bolt (8), nut (7), and washers.
3. Use a 50/50 isopropyl alcohol/water mix to clean the nut threads (7), bolt threads (8), and the inside of the bushings (6, 11).
4. Apply threadlocker to the nut threads.

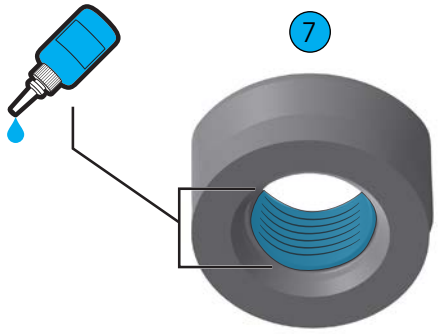

IsoSpeed — SLR (continued)

5. Apply grease to the bolt (8) as shown below. Do not apply grease to the threads.

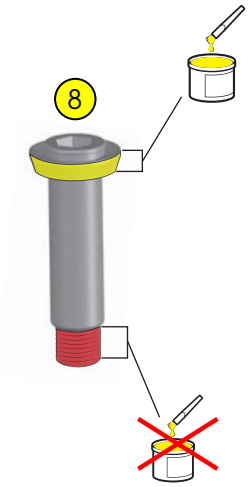

6. Install the hardware as shown on page 12. Torque the bolt (8) to 12.5Nm.

   NOTE: Torque the bolt to the value shown in this manual (12.5Nm). Some early production models have an incorrect torque value etched into the head of this bolt.

7. Reinstall the IsoSpeed covers (2).
8. Allow the assembly to cure for 24 hours at room temperature (72°F/22°C).

Storage door

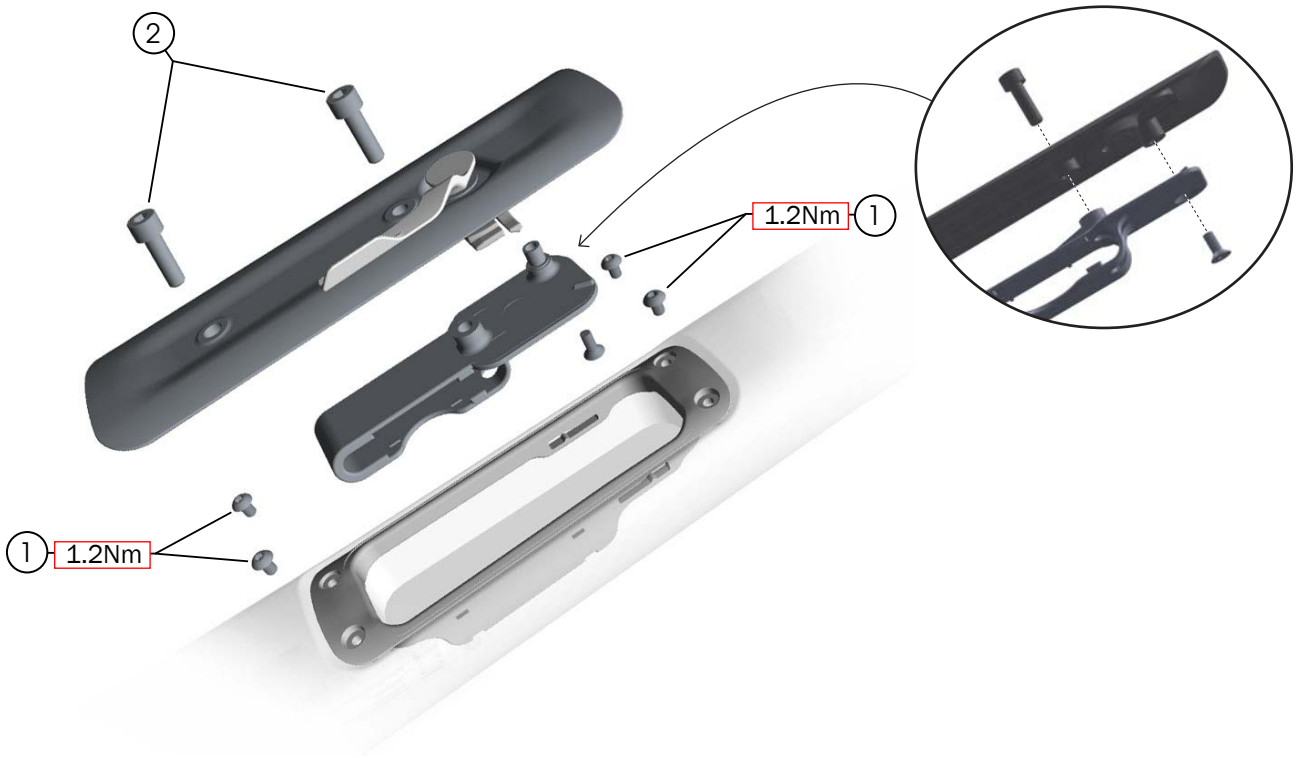

1 Mount screws — *W302605*

2 Bolt (M5x16mm) — *W596821*

— *storage door kit**

**This is a color-matched part — search trekbikes.com to find the right color for your bike.*

Frame guards

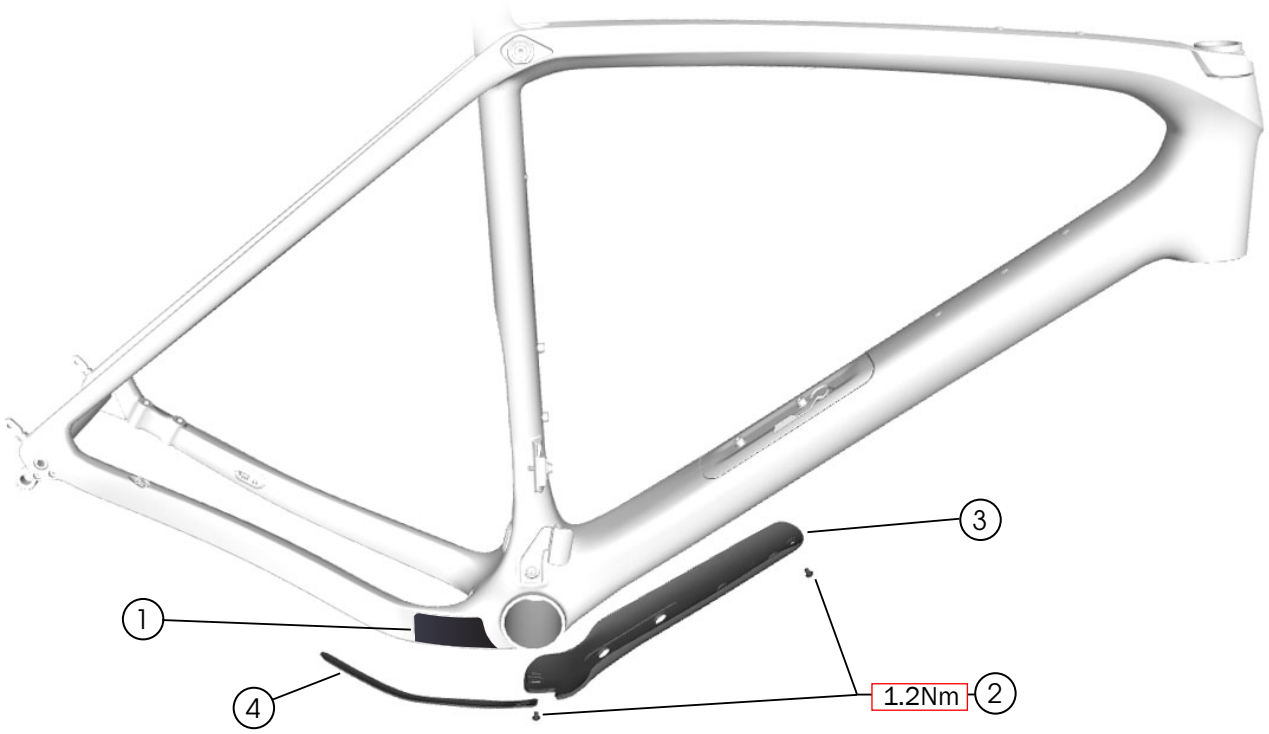

1. Chainstay strike guard — *W5269679*
2. Button head screws — *1042535*
3. Down tube guard — *W5253574*
4. Chainstay frame guard — *W5253575*

Chainkeeper

NOTE: This chainkeeper only functions properly on 2x chainring drivetrains. It is not compatible with 1x chainring drivetrains and 2x chainring drivetrains with a wider chainline (such as SRAM WIDE).

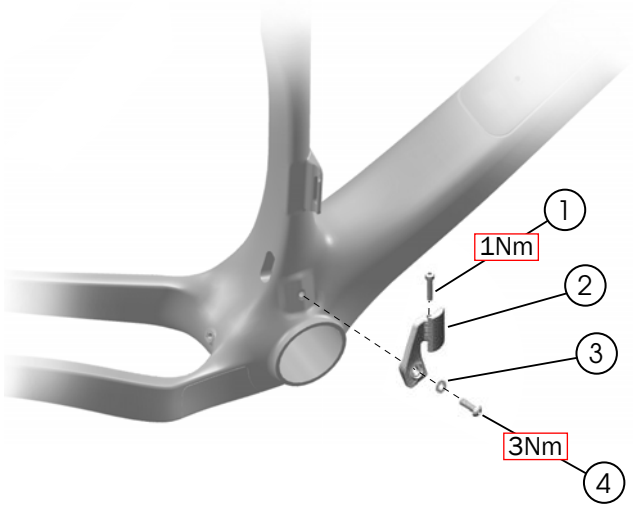

1. Bolt (M4x22mm)
2. Chainkeeper
3. Flat washer (M5x10mm)
4. Bolt (M5x16mm)

kit 573827

Adjust the chainkeeper

1. Shift to the lowest gear (largest rear cassette cog) and inner chainring.
2. Loosen the bolt (1) on the chainkeeper.
3. Rotate the loose piece (shown in red below) so there is 1mm of horizontal clearance to the chain.

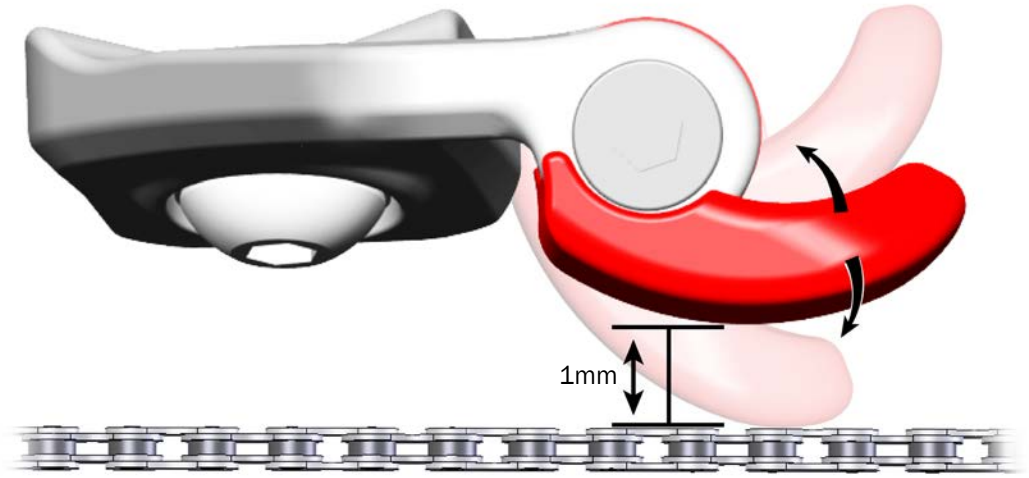

4. Tighten the bolt (1) to 1Nm.

Accessories — SL

Water bottle cage adapters

For frames 54cm or larger, you can fit three water bottle cages in the frame triangle using the adapters.

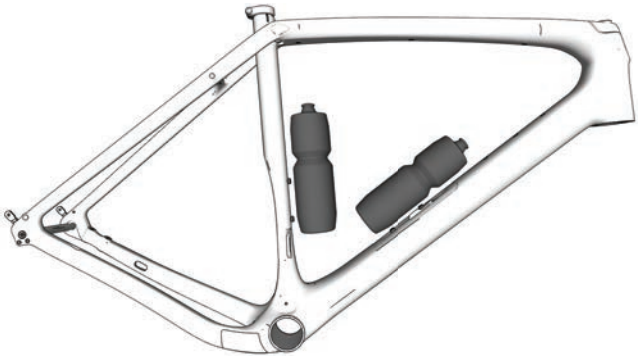

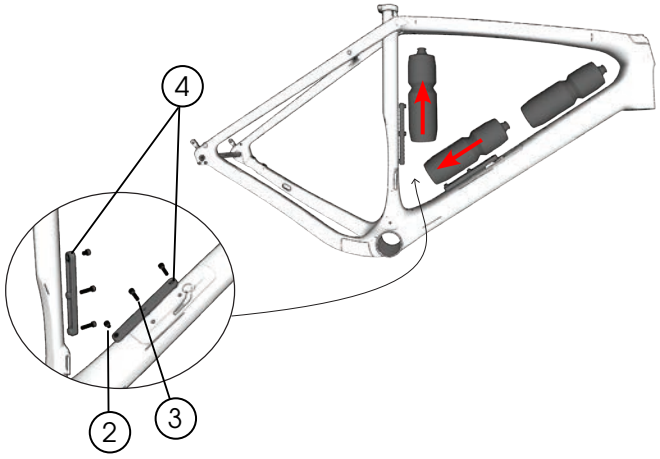

1. Fender mount bolts — *W331954*
2. Bolt (M5x8mm) — *kit W5271627*
3. Bolt (M5x16mm) — *kit W5271627*
4. Bottle cage adapters — *kit W5271627*
5. Frame bag

Mounting inserts

All mounting inserts are M5x0.8.

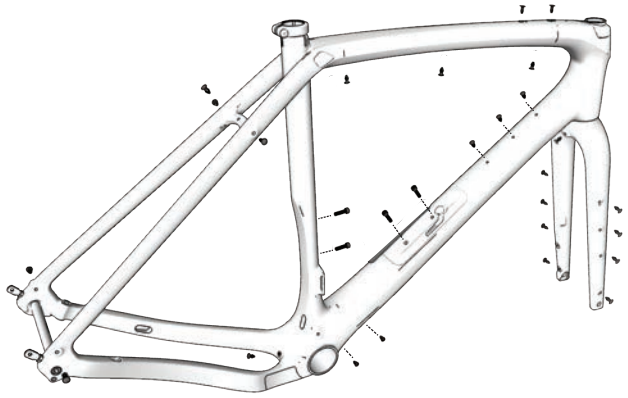

Rack, fenders, and frame bag

NOTE: Use only steel fasteners to attach racks, bags, and fenders. Do not use aluminum fasteners as they are not rated for these loads.

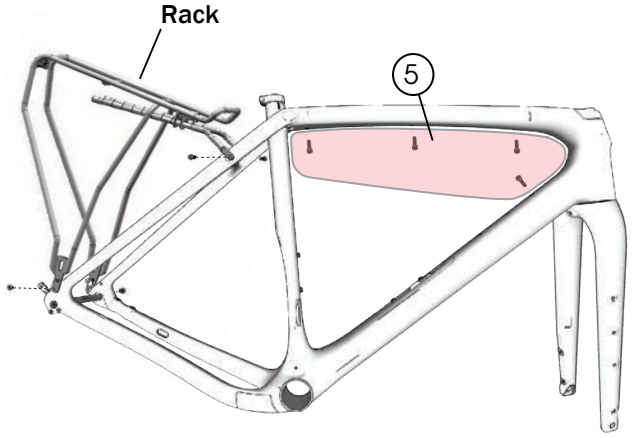

Rear fender

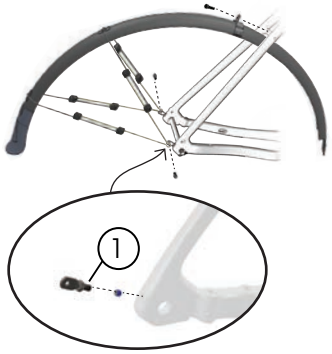

Front fender

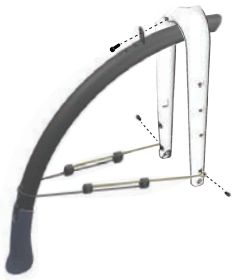

Accessories — SLR

Water bottle cage adapters

For frames 54cm or larger, you can fit three water bottle cages in the frame triangle using the adapters.



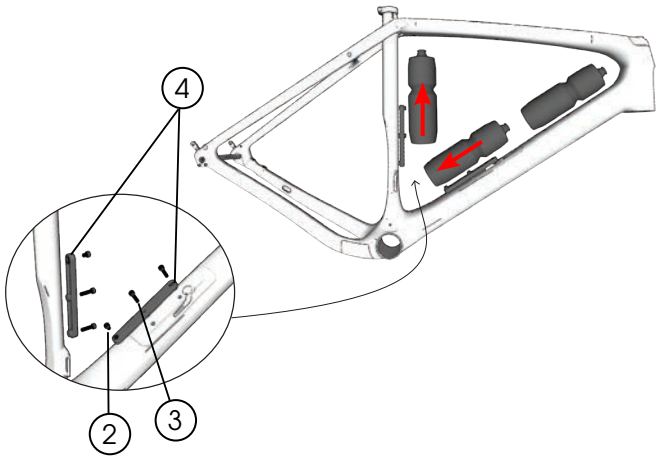

1. Fender mount bolts — *W331954*
2. Bolt (M5x8mm) — *kit W5271627*
3. Bolt (M5x16mm) — *kit W5271627*
4. Bottle cage adapters — *kit W5271627*
5. Frame bag

Mounting inserts

All mounting inserts are M5x0.8.



Fenders and frame bag

NOTE: Use only steel fasteners to attach fenders and bags. Do not use aluminum fasteners as they are not rated for these loads.

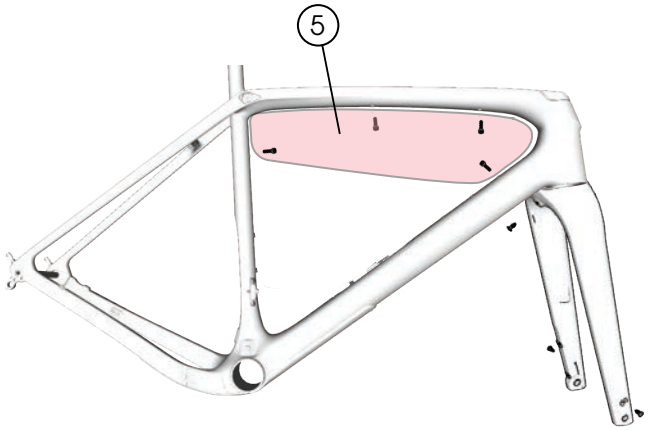

Rear fender

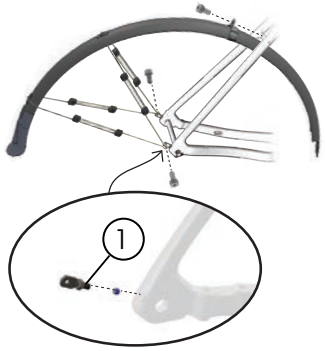

Front fender

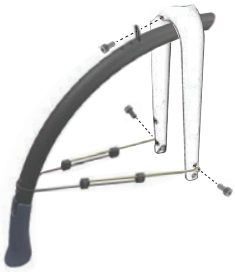

Specifications

		SL	SLR
Rear hub OLD		142mm	142mm
Seat post OD		27.2mm	—
Seat post clamp ID		31.9mm	—
Seatmast ID		—	30mm
Steerer tube OD	**Upper fork**	28.6mm	28.6mm
	Lower fork	38.1mm	38.1mm
Bottom bracket type/width		T47/85.5mm	T47/85.5mm
Brake rotor diameter min/max		140/160mm	140/160mm
Tire width max 700c	**With fenders**	42mm	42mm
	Without fenders	45mm (1.8”)	45mm (1.8”)
Tire width max 650b (without fenders)		53.5mm (2.1”)	53.5mm (2.1”)
Fender compatible	**Rear**	Yes	Yes
	Front	Yes	Yes
Rack mount compatible		Yes	No
Dropper post compatible		Yes	No

	Chainline	Max chainring teeth (T)		
		Small	Large	Single (1x)
Shimano GRX	49.7mm	—	—	50T
	47mm	42T	52T	—
Shimano	43.5mm	36T	50T	—
SRAM	45mm	—	—	46T
	45mm	37T	50T	—
SRAM WIDE	47.5mm	—	—	48T
	47.5mm	44T	50T	—