

2022 BOONE

SERVICE MANUAL SUPPLEMENT

Contents



Safety



Brake/shift routing — mechanical



Brake routing — eTap



T47 bottom bracket



Headset and fork



IsoSpeed



Chainkeeper



Chainstay Strike Guard



Specifications

Safety

WARNING

Properly tighten hardware

Always tighten hardware to the specified torque. Over-tightening hardware could deform or break the hardware or components. Under-tightening hardware could cause hardware or components to become loose. Either situation could damage the bicycle and result in injury to the rider.

WARNING

Reapply threadlocker

All reused-fasteners with pre-applied threadlocker must be cleaned with isopropyl alcohol and have new threadlocker applied before re-assembly. If threadlocker is not applied, the fasteners may loosen which could damage the bicycle and result in injury to the rider.

Legend



Apply appropriate grease



Do not apply grease



Threadlocker

Nm Torque

★ Cable (zip) tie

Copyright 2022 Trek Bicycle Corporation All Rights Reserved

Brake/shift routing — mechanical

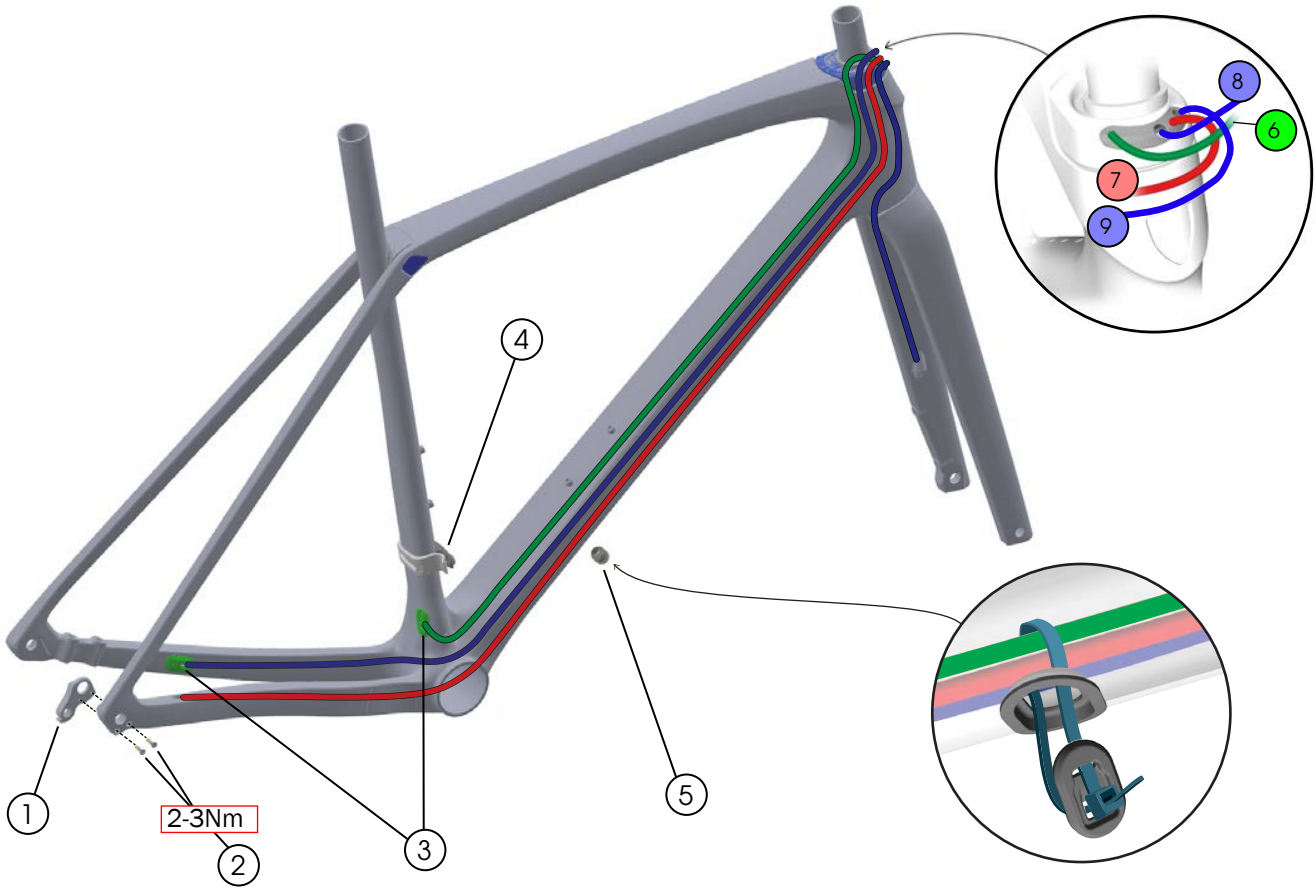

1. Rear derailleur hanger — *W524188*
2. Rear derailleur hanger bolts — *W524884*
3. Housing grommets — *W330578*
4. Front derailleur clamp — *W5256886*
5. Cable (zip) tie guide — *W513977*
6. Front derailleur cable
7. Rear derailleur cable
8. Front brake hose
9. Rear brake hose

Route the brake hoses

1. Connect the calipers to the brake hoses.
2. Route the rear brake hose through the grommet (3). Route both hoses as shown.

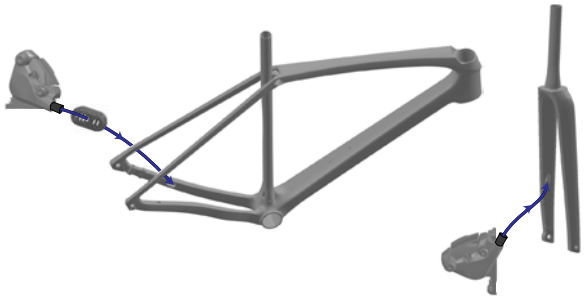

3. Attach the calipers to the chainstay and fork. Do not fully torque the mounting bolts until the calipers are aligned correctly.

Brake/shift routing — mechanical (continued)

Route the shift housings

1. Label both shift housings. You will need to identify them when you assemble the headset.
2. Attach the derailleurs to the bicycle.
3. Route the front derailleur housing through the grommet (3). Route both shift housings through the frame as shown.

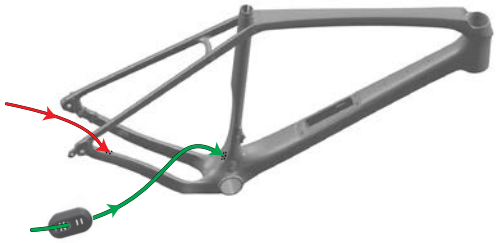

4. Connect the shift housings to the derailleurs. Insert the grommet (3) into the frame.
5. Install the T47 bottom bracket, fork and headset, and handlebar.
6. Cut the shift and brake housings at the levers (make sure you have enough slack).
7. Route the shift cables through the housings in the frame — starting in the front — and attach them to the derailleurs.

Cable (zip) tie the shift housings and rear brake hose

1. Bend the cable (zip) tie in half to create a crease. This will make it easier to wrap the cable (zip) tie around the cables and out through the hole.
2. Use a hook and a pick tool to hold the cables and guide the cable (zip) tie around them.
3. Route the cable (zip) tie through the cable (zip) tie guide (5) as shown below.

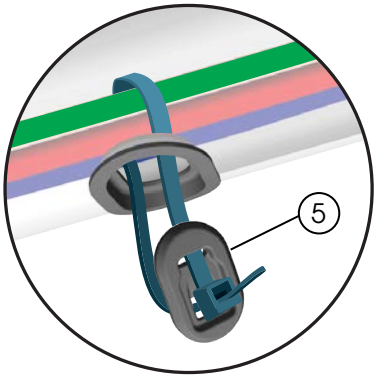

4. Insert the cable (zip) tie guide into the down tube and tighten the cable (zip) tie.

Brake routing — eTap

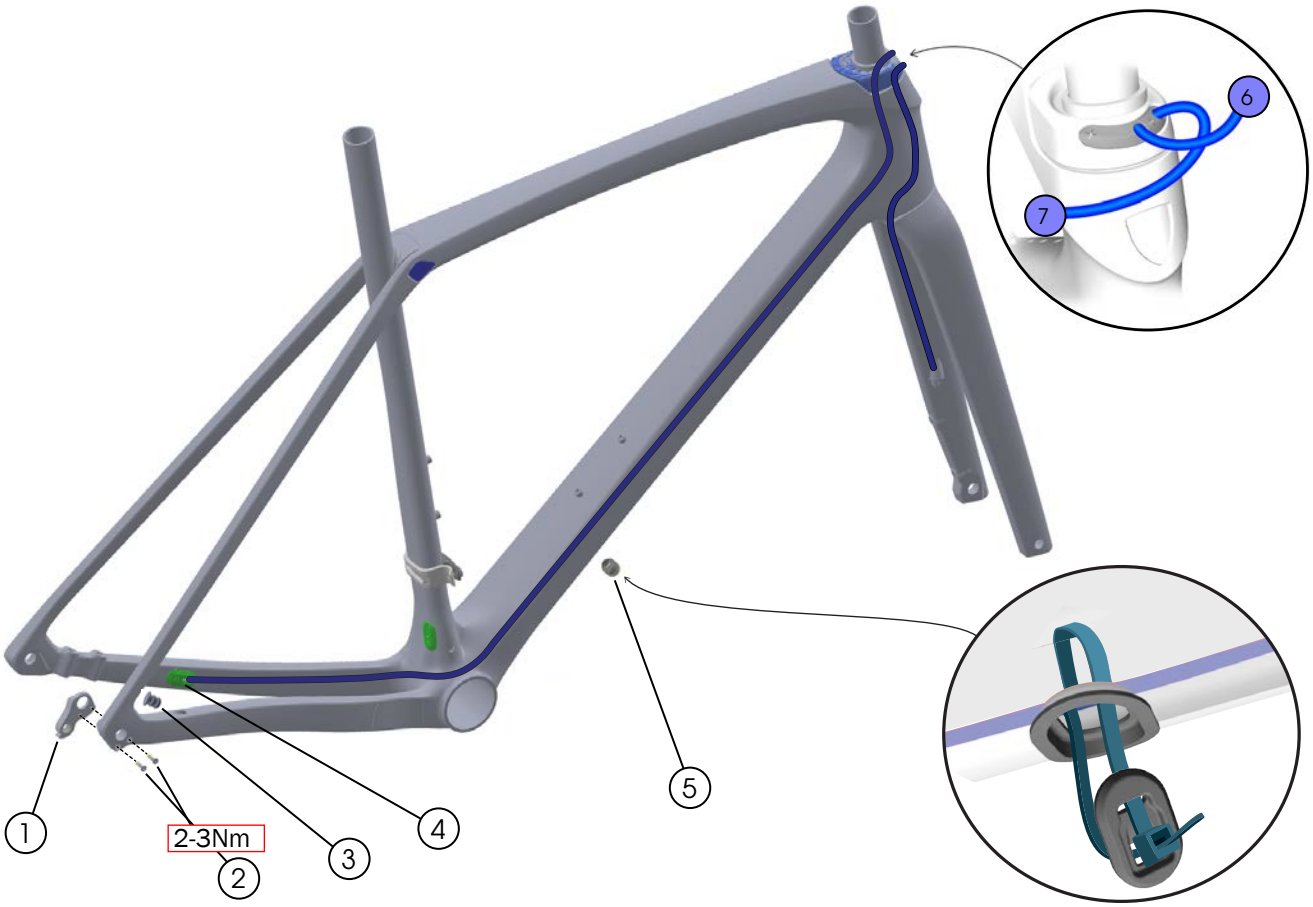

1. Rear derailleur hanger — *W524188*
2. Rear derailleur hanger bolts — *W524884*
3. eTap grommet plug — *W600209*
4. Housing grommet — *W330578*
5. Cable (zip) tie guide — *W513977*
6. Front brake hose
7. Rear brake hose

Route the brake hoses

1. Connect the calipers to the brake hoses.
2. Route the rear brake hose through the grommet (3). Route both hoses as shown.

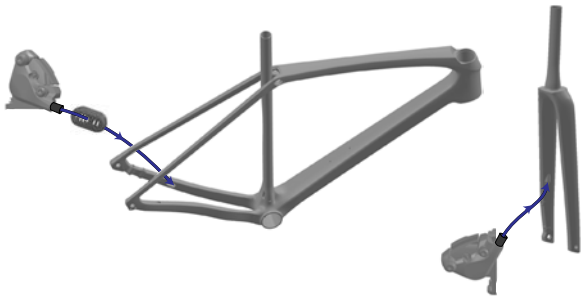

3. Attach the calipers to the chainstay and fork. Do not fully torque the mounting bolts until the calipers are aligned correctly.

Brake routing — eTap (continued)

Cable (zip) tie the rear brake hose

1. Bend the cable (zip) tie in half to create a crease. This will make it easier to wrap the cable (zip) tie around the cables and out through the hole.
2. Use a hook and a pick tool to hold the cables and guide the cable (zip) tie around them.
3. Route the cable (zip) tie through the cable (zip) tie guide (5) as shown.

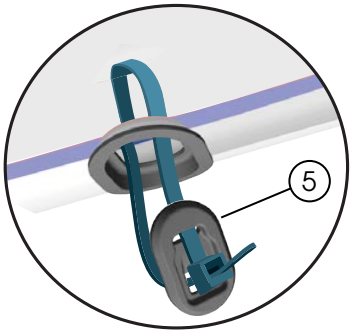

4. Insert the cable (zip) tie guide into the down tube and tighten the cable (zip) tie.

Brake/shift routing — Di2

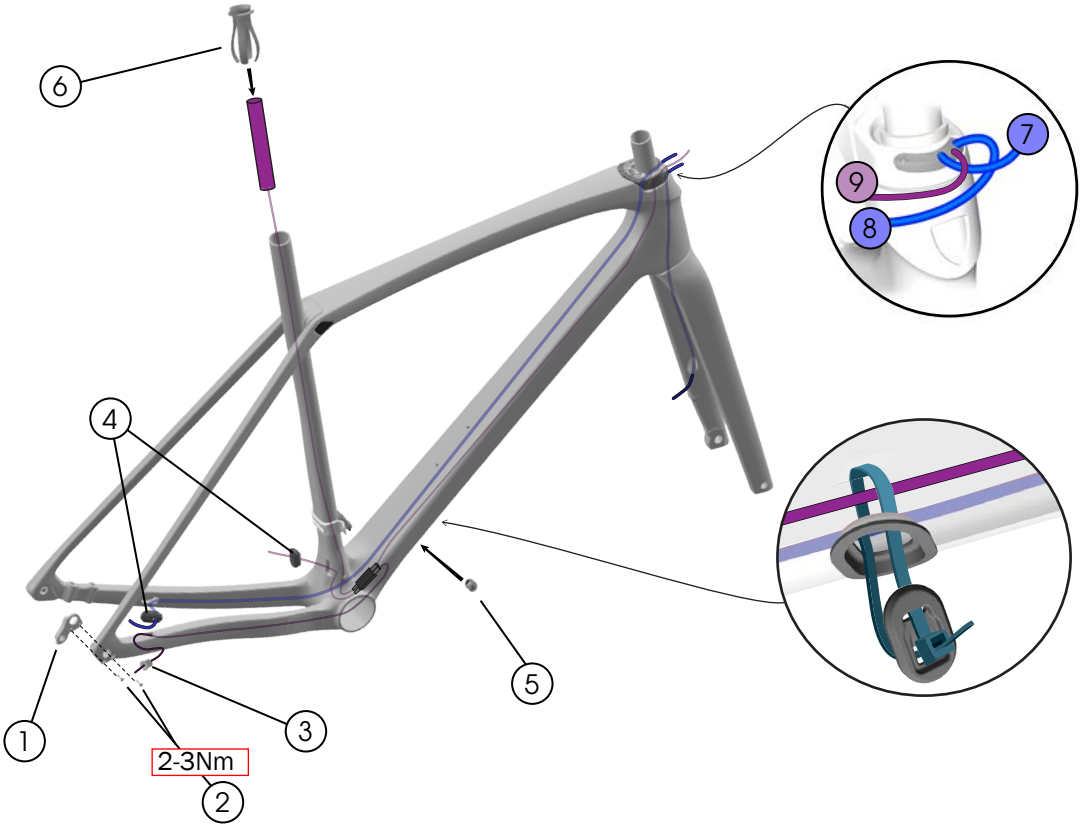

1. Rear derailleur hanger — *W524188*
2. Rear derailleur hanger bolts — *W524884*
3. Di2 grommet plug — *W600208*
4. Housing grommet — *W330578*
5. Cable (zip) tie guide — *W513977*
6. Battery mount — *W326749*
7. Front brake hose
8. Rear brake hose
9. Di2 wire

Di2 wiring diagram

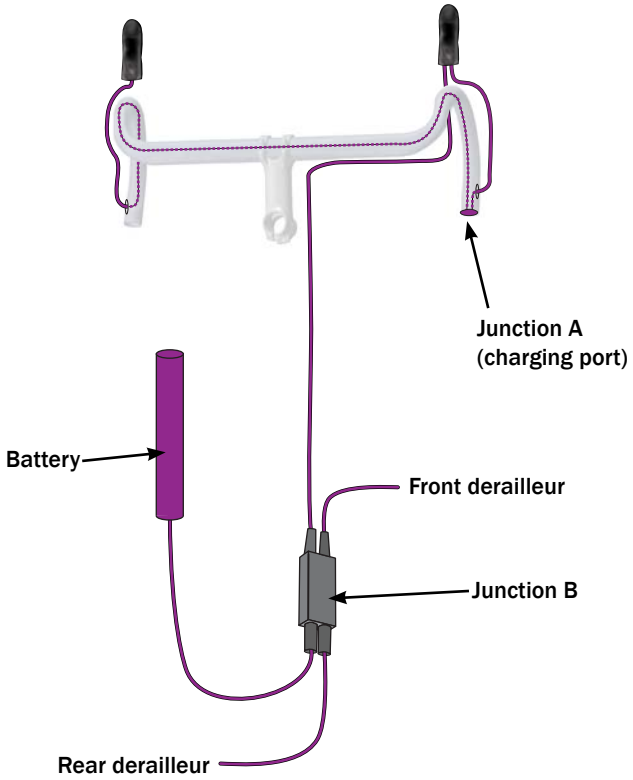

T47 bottom bracket

Install the bottom bracket

1. Apply grease to the threads on both sides of the frame.

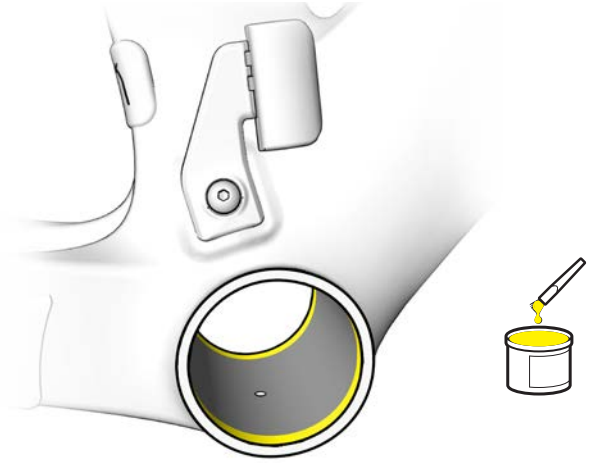

2. Using your hands, thread the bottom bracket onto the frame.

   NOTICE: Do not start tightening the bottom bracket with a tool. Dirt and other contaminants can damage the threading.

3. Use the proper tool to torque both sides to specification (see the Tool and spline compatibility table below).
4. If necessary, add spacers before installing the cranks (see the Spacers required table at the top right).

Spacers required

The table below contains bottom bracket/crank combinations that require spacers. Your bicycle may have other combinations that do not require spacers.

Crank		Bottom bracket	Spacers required	
			Drive side	Non-drive side
Shimano		CeramicSpeed 24mm	0.5mm	0.5mm
SRAM	DUB	SRAM DUB	2-3mm	—
	GXP	Wheels MFG	1.0mm	—

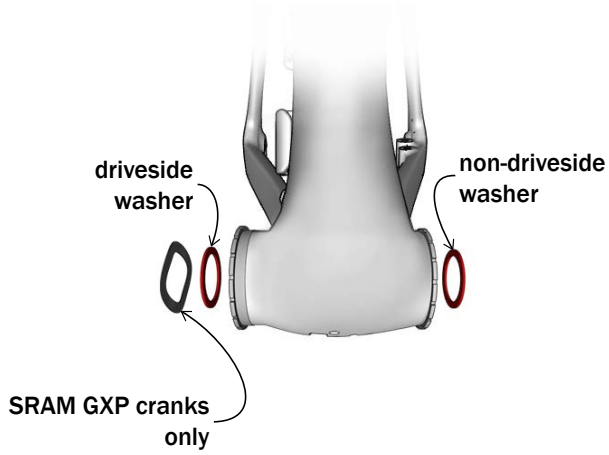

Tool and spline compatibility

	Tool	Praxis		Unior	Park Tool	Wheels Mfg	CeramicSpeed
	Model *Part number*	TP-2400 *594148*	TP-3028 *594147*	1671.T47 *1043614*	BBT-47 *568922*	BBTOOL-48-44 *589307*	—
Bottom bracket manufacturer	Praxis 24mm	X		X			
	Praxis 30mm		X	X			
	Wheels MFG					X	
	SRAM DUB			X	X		
	Chris King			X	X		
	Ceramic-Speed 24mm			X	X		X
	Ceramic-Speed GXP						X

Headset and fork

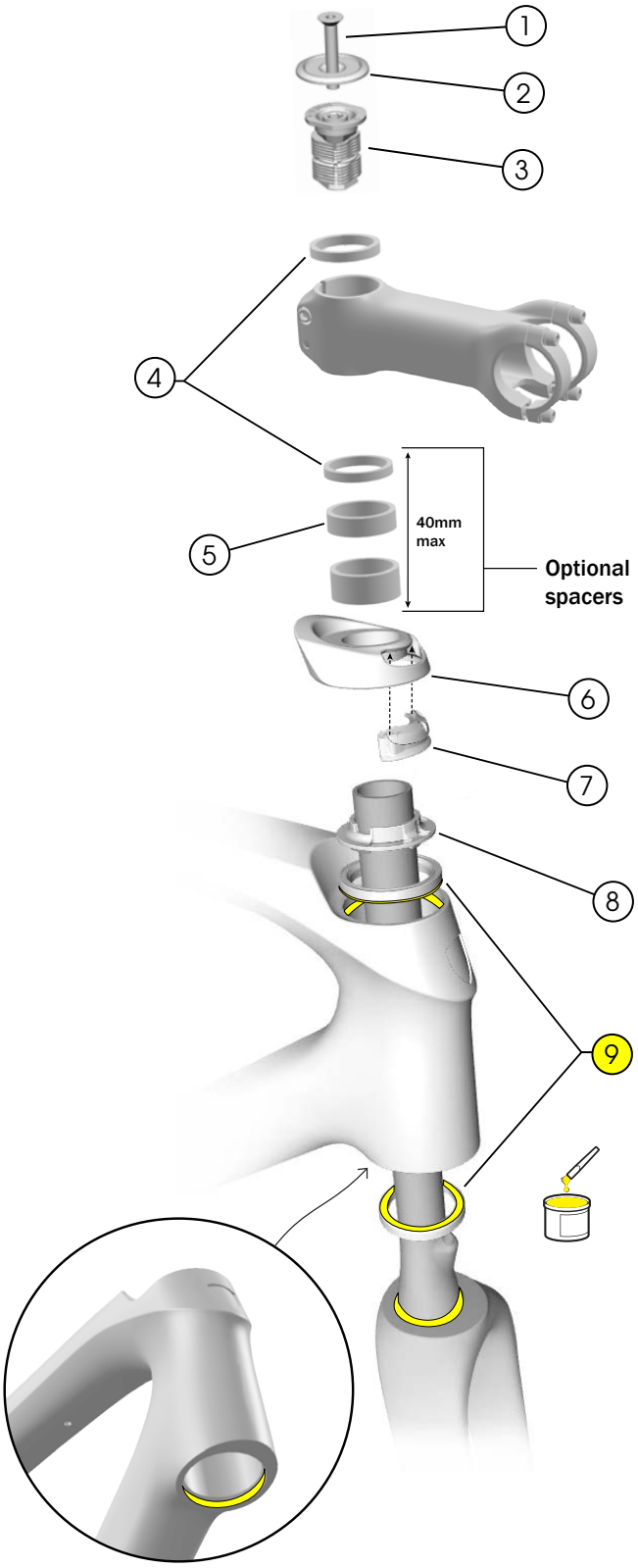

1. Top cap bolt
2. Compression plug cap
3. Compression plug

W547432

4. Spacers (5mm) — *5253930*
5. Spacer, optional (10mm) — *5253931*
6. Headset routing cap*
7. Headset routing cap grommet — *W5253580*
8. Headset split ring — *W5266050*
9. Headset bearings — *W540243*

**This is a color-matched part — search trekbikes.com to find the right color for your bike.*

Install the headset

1. Clean the steerer tube using isopropyl alcohol.
2. Grease both bearings (6), the fork crown race, and both head tube bearing bores (upper and lower) as shown to the left.
3. Insert the fork into the head tube.

   TIP: Support the fork with a table during the assembly.
4. Route the shift housings and brake hoses through the split ring (5) as shown below (see pages 2-7 for different routing examples).

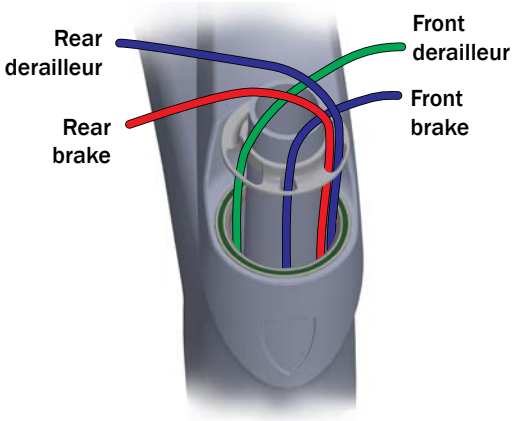

Mechanical routing example

5. Complete the headset assembly as shown to the left.

IsoSpeed

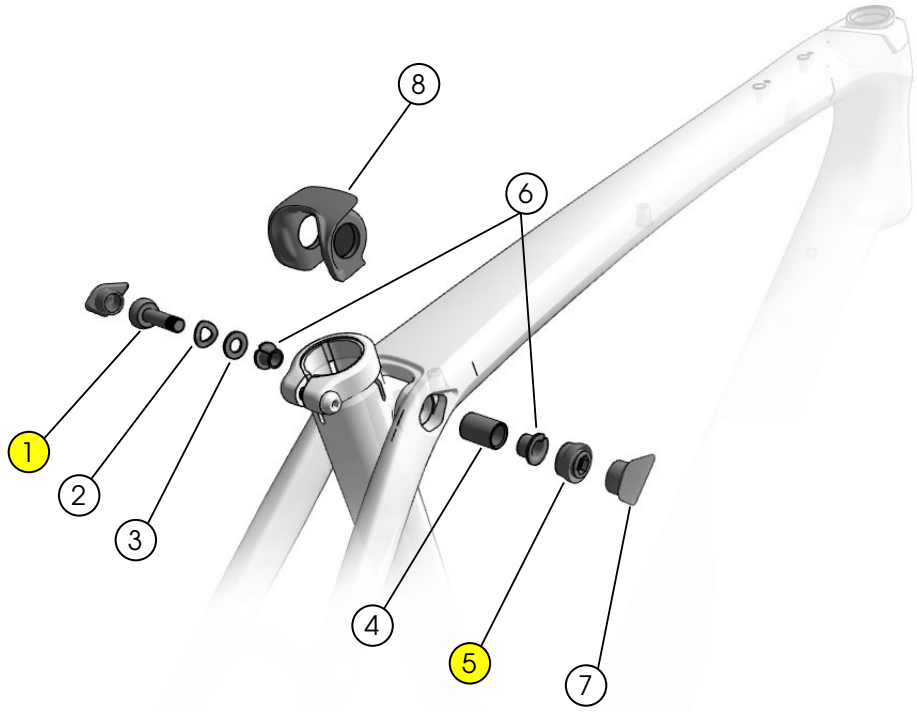

- 1 Bolt
- 2 Wave washer
- 3 Washer
- 4 Cylindrical bushing
- 5 Nut

kit W569265

- 6 Flanged bushings — *W561683*
- 7 IsoSpeed covers*
- 8 Grommet — *W5256396*

**This is a color-matched part — search trekbikes.com to find the right color for your bike.*

Servicing the IsoSpeed

1. Carefully remove the IsoSpeed covers (7) with a paint-safe plastic pry bar.
2. Remove the bolt (1), nut (6), and washers.
3. Use a 50/50 isopropyl alcohol/water mix to clean the nut threads (6), bolt threads (1), and the inside of the bushings (4, 5).
4. Apply threadlocker to the nut threads.

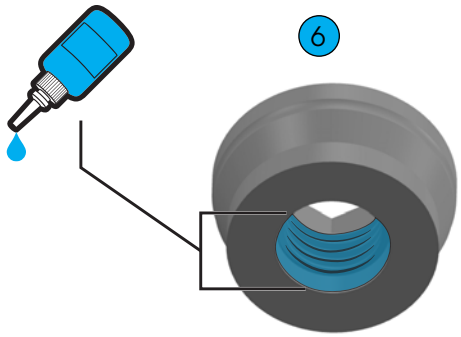

IsoSpeed (continued)

5. Apply grease to the bolt and nut as shown below. Do not apply grease to the threads.

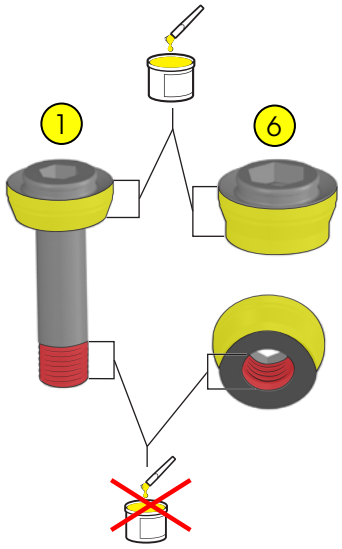

6. Place the washers on the bolt. Tighten the nut to 10Nm while securing the bolt with a wrench as shown below.

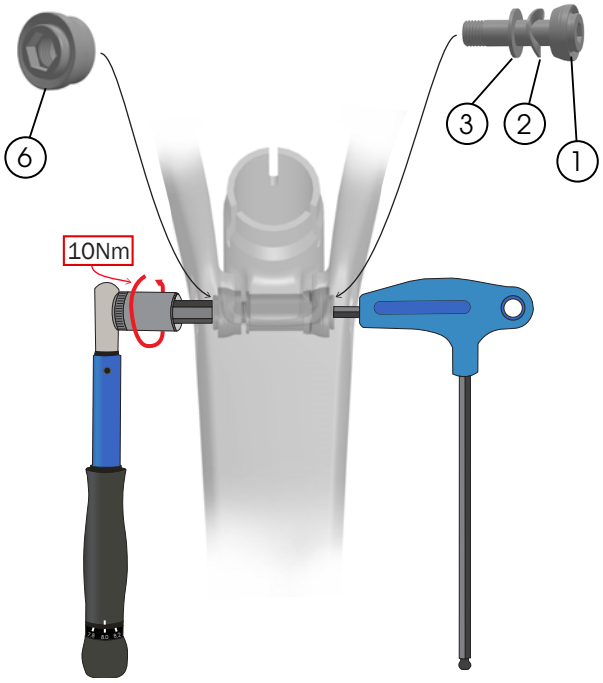

7. Reinstall the IsoSpeed covers.
8. Allow the assembly to cure for 24 hours at room temperature (72°F/22°C).

Chainkeeper

Adjust the chainkeeper — 1x chainring

1. Shift to the lowest gear (largest rear cassette cog).
2. Loosen the screw on the back of the chainkeeper.
3. Move the loose piece up or down so there is 1mm of vertical clearance to the chain.
4. Tighten the screw on the back of the chainkeeper.

1. Chainkeeper (38T-46T)
2. Curved washer
3. Bolt (M5x16mm)

kit W541421

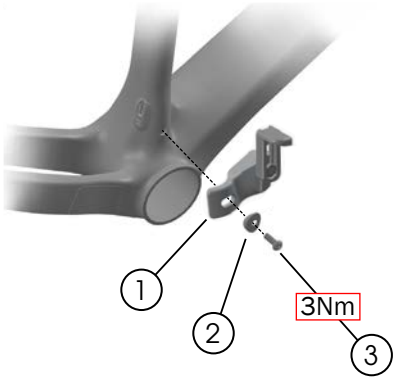

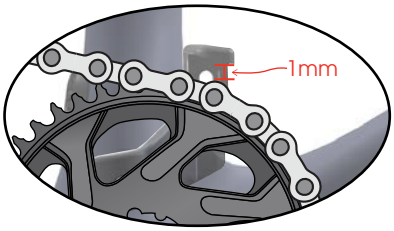

Clearance

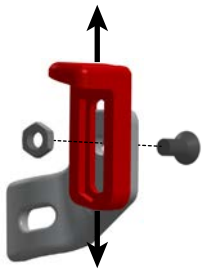

Adjust clearance

Adjust the chainkeeper — 2x chainrings

1. Shift to the lowest gear (largest rear cassette cog) and inner chainring.
2. Loosen the screw holding the chainkeeper in place.
3. Rotate the chainkeeper so there is 1mm of horizontal clearance to the chain.
4. Tighten the screw to 3Nm.

1. Chainkeeper (30T-36T)
2. Chainkeeper (36T-42T)
3. Curved washer
4. Bolt (M5x16mm)

kit 431223

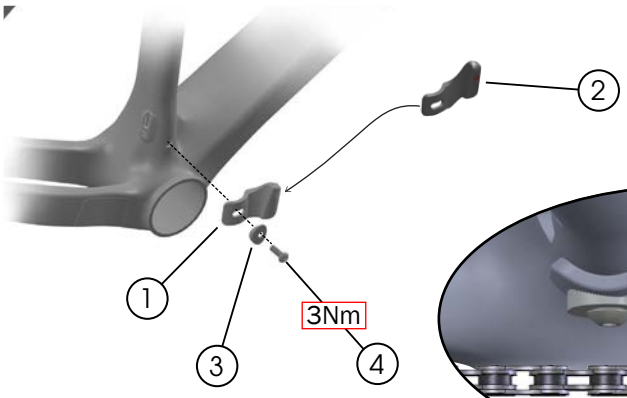

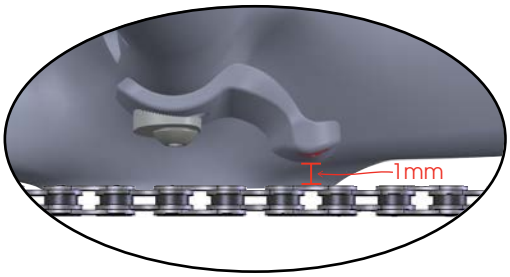

Clearance

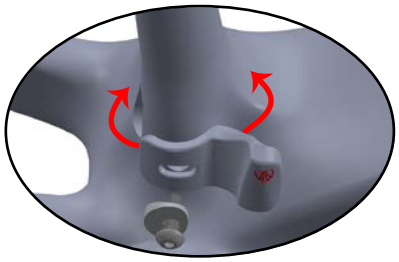

Adjust clearance

Chainstay Strike Guard



1 2022 Boone Chainstay Strike Guard — *W5255331*

Install the chainstay guard

1. Clean the mating surface on the frame with 50/50 isopropyl alcohol mix.
2. Attach the guard with Loctite Hysol Epoxy Adhesive part number 600808.

   TIP: Wrap masking tape around the guard/plate and the frame to hold it in place while the epoxy cures.

Allow the epoxy to cure for 24 hours (or according to manufacturer's specifications).

Specifications

	Boone
Rear hub OLD	142mm
Seatmast ID	30mm
Upper fork steerer tube OD	28.6mm
Bottom bracket type/width	T47/85.5mm
Brake rotor diameter	140/160mm
Tire width max 700c	38mm (1.5”)
Fender mount — rear	No
Fender mount — front	No
Rack mount	No
Dropper post compatibility	No

	Chainline	Max chainring teeth (T)		
		Small	Large	Single (1x)
Shimano GRX	49.7mm	—	—	50T
	47mm	42T	52T	—
Shimano	43.5mm	36T	50T	—
SRAM	45mm	—	—	46T
	45mm	37T	50T	—
SRAM WIDE	47.5mm	—	—	48T
	47.5mm	44T	50T	—