

2022 and 2023 Carbon Rail
9.8 and 9.9 Gen 3

SERVICE MANUAL SUPPLEMENT

Rev 5 Nov 2025

Contents


Safety


Active Braking Pivot (ABP)

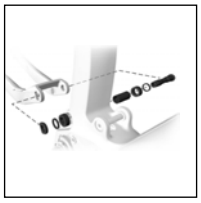
Main pivot and chainstay


Frame guards


Drive unit and mounting bolts

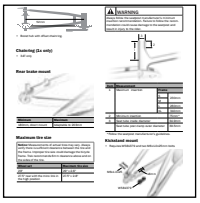
Specifications


Headset with Knock Block


Rocker pivot and seat stay


Shock mounts


RIB — battery assembly


Battery charge port

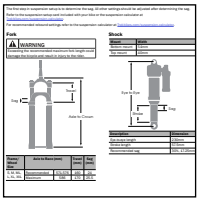
Suspension


Derailleur hanger

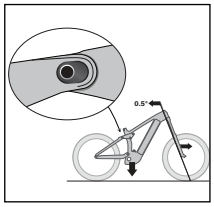

Adjust the geometry


Cable routing


RIB — docking assembly


Speed sensor

Safety

WARNING

Properly tighten hardware

Always tighten hardware to the specified torque. Over-tightening hardware could deform or break the hardware or components. Under-tightening hardware could cause hardware or components to become loose. Either situation could damage the bicycle and result in injury to the rider.

WARNING

Reapply threadlocker

All reused-fasteners with pre-applied threadlocker must be cleaned with isopropyl alcohol and have new thread-locker applied before re-assembly. If threadlocker is not applied, the fasteners may loosen which could damage the bicycle and result in injury to the rider.

Legend


Apply grease


Do not apply grease


Apply threadlocker

Nm — Torque


Hex tool size


Torx tool


Drift size


Zip tie

Copyright 2021 Trek Bicycle Corporation All Rights Reserved

Headset with Knock Block

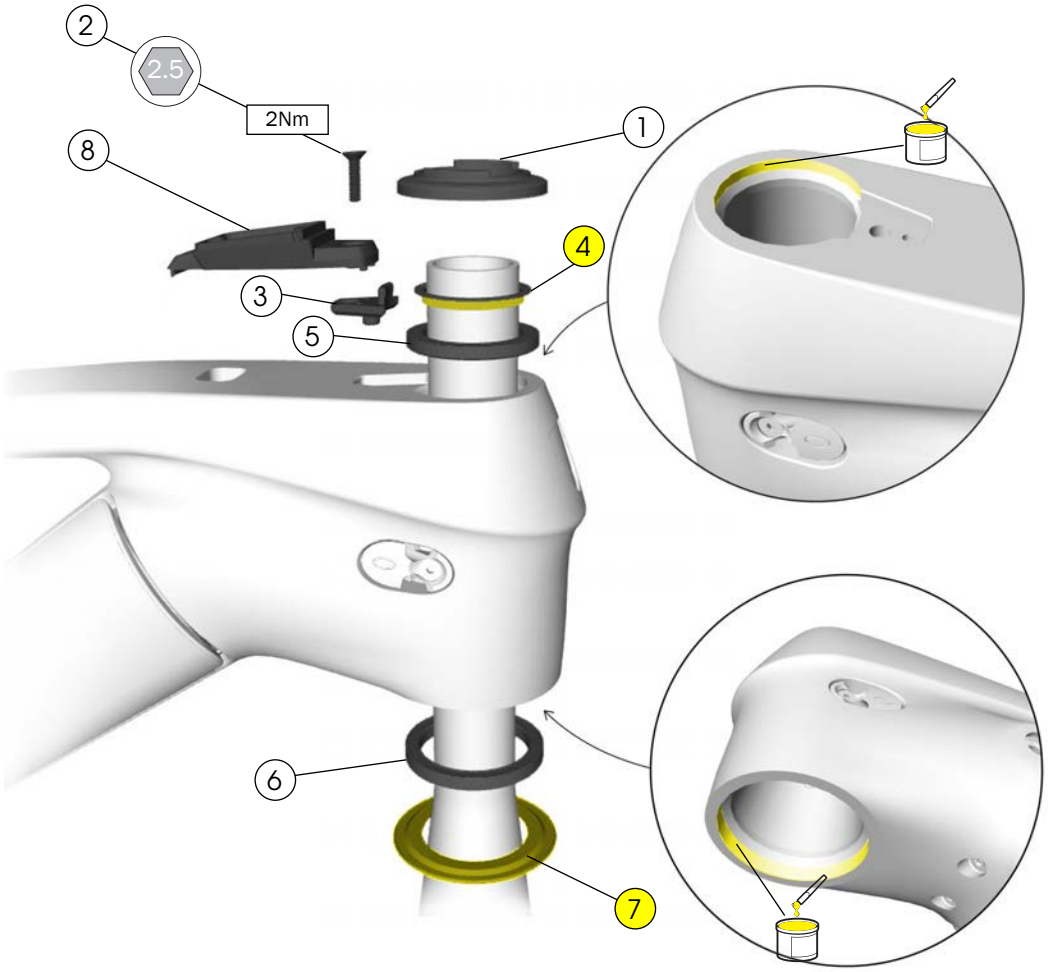

1. Upper bearing cover
2. Chip bolt

— 5252161

3. Knock Block chip — W532763
4. Compression ring — W532842
5. Upper bearing — W531676
6. Lower bearing, 1.8" diameter. — W5269809
7. Crown race, for 1.8" diameter lower bearing — W5283203
8. Display mount — W5254476

Tools

- 2.5mm hex tool
- Grease

Derailleur hanger

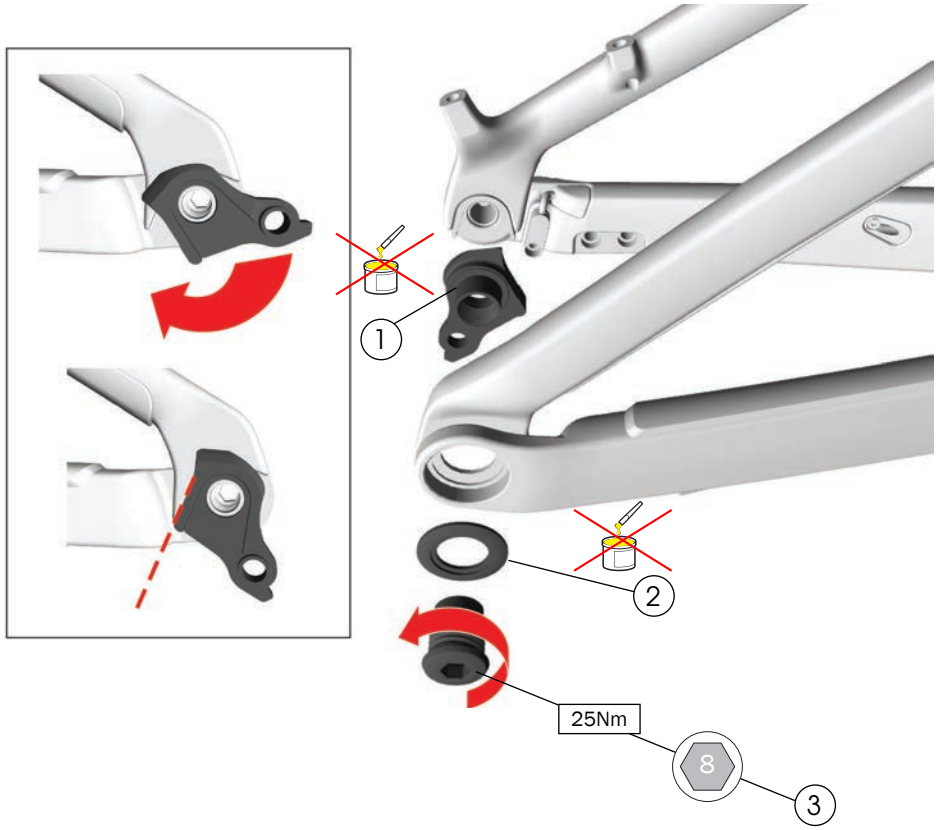

1. Derailleur hanger
2. Washer
3. Bolt

— W5271425

Tools

- 8mm hex tool
- Torque wrench (left-hand thread) with 8mm hex bit

WARNING

Do not apply grease to the derailleur hanger or bolt. Apply grease to only the thru axle.

This bicycle frame is designed to use a Universal Derailleur Hanger (UDH).

NOTICE: The thru axle must be compatible with a UDH and must be M12x1.0 with a 12.7mm thread.

NOTICE: The washer is frame-specific. Install only the washer compatible with your frame.

NOTICE: Do not over-tighten. Over-tightening the bolt could cause the hanger to break.

For additional information about the UDH, refer to the SRAM user manual at www.sram.com.

Active Braking Pivot (ABP)

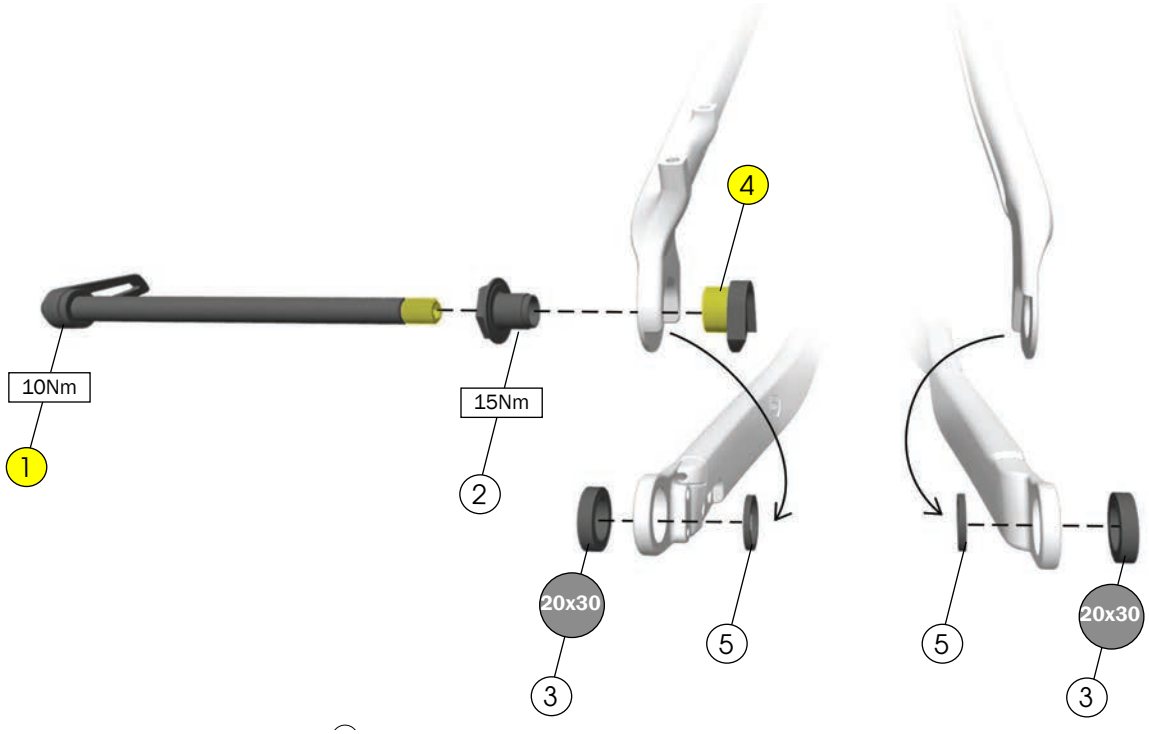

1. Thru axle — W583470
2. Non-driveside dropout — W583420
3. Bearings — W583424
4. Dropout axle — W583419
5. Spacers — W583422

— 599911

Tools

- Bearing press, 20x30 drift
- Cassette lockring
- Grease

NOTICE: The thru axle must be compatible with a UDH and must be M12x1.0 with a 12.7mm thread.

Rocker pivot and seat stay

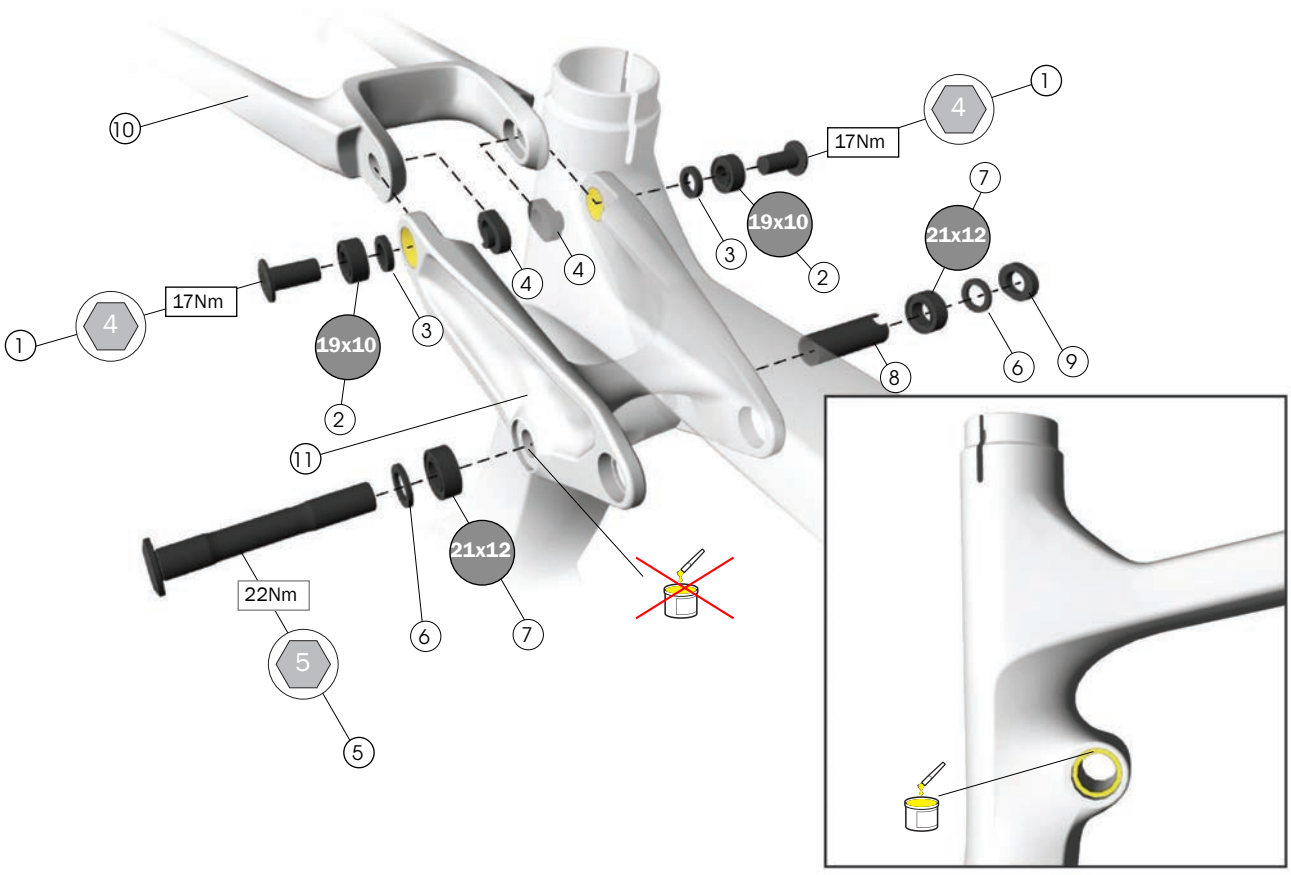

1. Bolts — W600629
2. Bearings — W529224
3. Spacers — W529969
4. Mino link — W529223
5. Rocker axle — W535469
6. Spacers — W290057
7. Bearings — W586543
8. Seat tube pivot sleeve — W310155
9. Nut — W311582

— 599910

10. Seatstay — 30893. Search trekbikes.com to find the color-matched part for your bike.
11. Rocker link — 30969. Search trekbikes.com to find the color-matched part for your bike.

Tools

- Bearing press, 19x10 and 21x12 drifts
- 4mm and 5mm hex wrenches
- Torque wrench with 4mm and 5mm hex bits

Seat tube pivot

Important: Press in driveside bearing first.

Adjust the geometry

Flip the Mino link in the seatstay pivot to change the bike's geometry to fit your riding style or the terrain.

Notice: If using a 29" wheel up front and a 27.5" wheel in the back, the minolink must be in the high position.

Steeper head tube angle

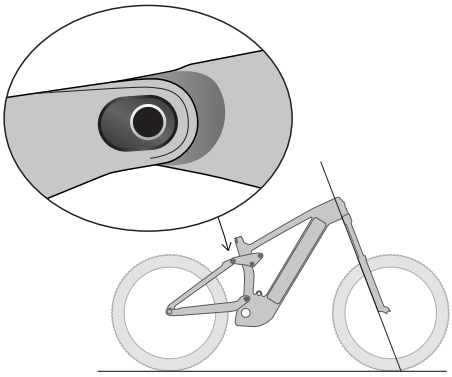

Mino link in the high position

- Pulls in the front fork for quicker steering
- Raises the bottom bracket for improved climbing

Slacker head tube angle

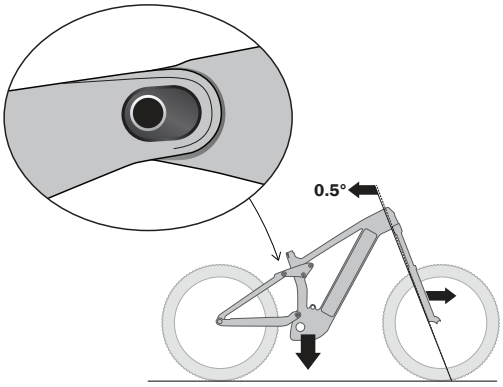

Mino link in the low position

- Pushes the head tube angle back 0.5° and pushes out the front fork for slower steering that is more stable at high speed
- Lowers the bottom bracket up to 9mm for more stability

Tools

- 5mm hex tool

1. With the bike on the ground, loosen and remove one mino link chip.
2. Loosen and remove the other mino link chip.
3. Position the bike:
   Mino link high: Lift the bike by the seat tube. This will pull the rear triangle up and forward.
   Mino link low: With the chips removed, gravity will pull the rear triangle down and back.
4. Place one mino link chip into the desired position. Slightly tighten the mino link bolt.
5. Install the other mino link chip into the same position. Slightly tighten the mino link bolt.
6. Torque both mino link bolts to 17Nm.

Main pivot and chainstay

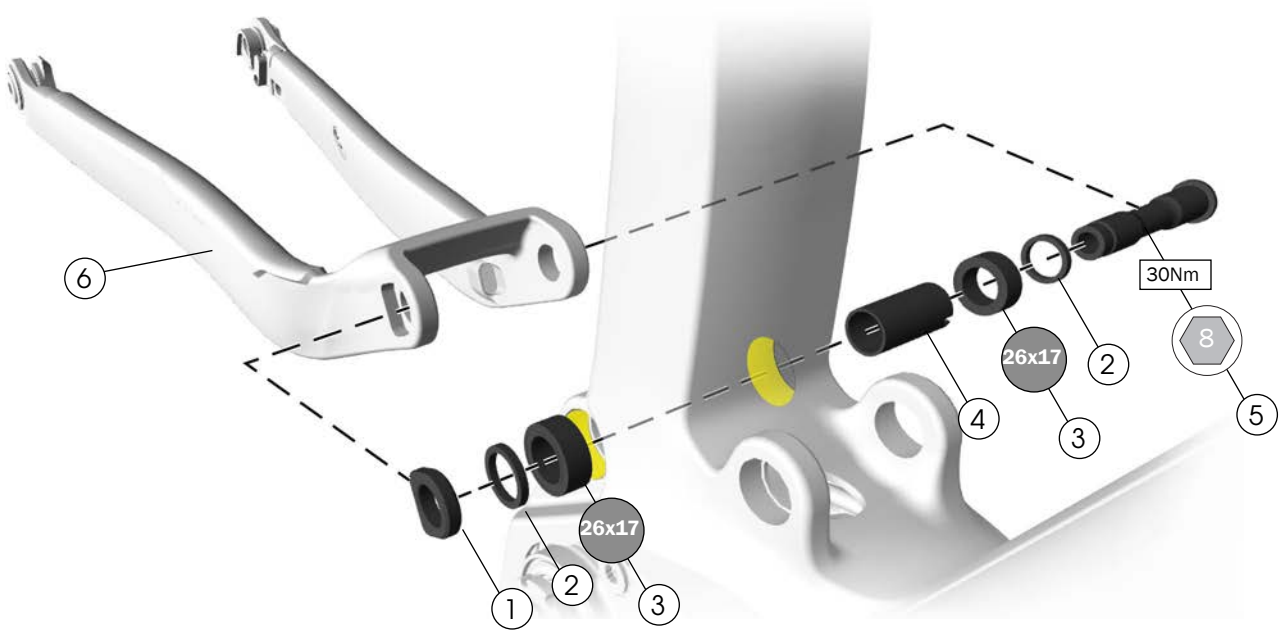

1. Nut — W584134
2. Spacers — W440921
3. Bearings — W302025

— 599909

4. Main pivot sleeve — W500592
5. Main pivot axle — W601376
6. Chainstay — 30891. Search trekbikes.com to find the color-matched part for your bike.

Tools

- Bearing press, 26x17 drift
- 8mm hex tool
- Torque wrench with 8mm hex bit
- Grease

Important: Press in the driveside bearing first.

Shock mounts

Standard

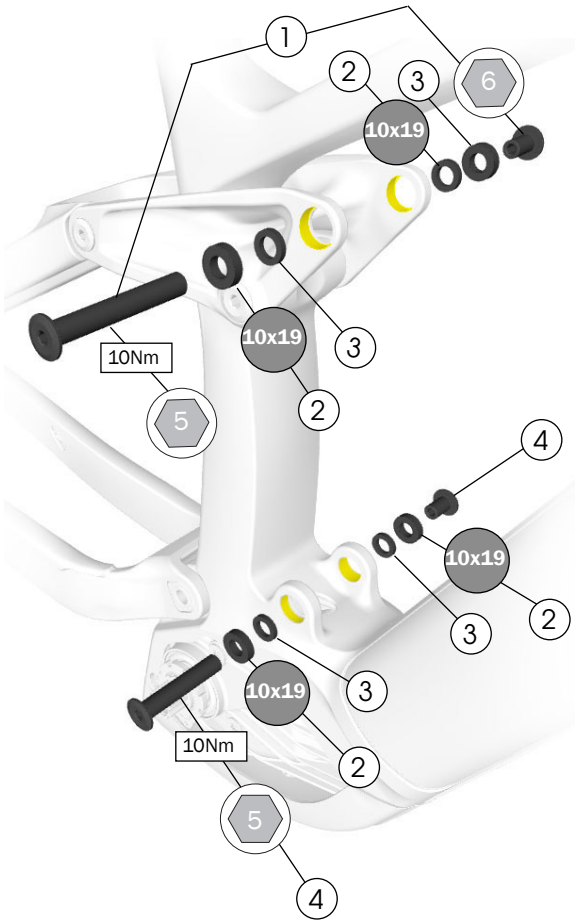

Thru shaft

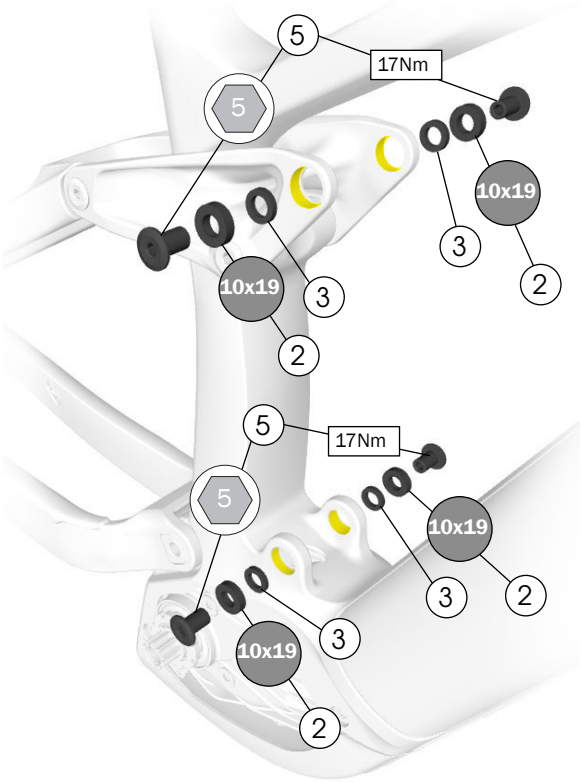

Tools

- Bearing press, 10x19 drift
- 5mm and 6mm hex wrenches
- Torque wrench with 5mm and 6mm hex bits

(1) Standard upper shock mount bolt and end cap — 5258209

(2) Bearings — W293466

(3) Spacers — W529969

(4) Standard lower shock mount bolts — 5258210

(5) Thru shaft shock mount bolts — W600630

Cable Routing

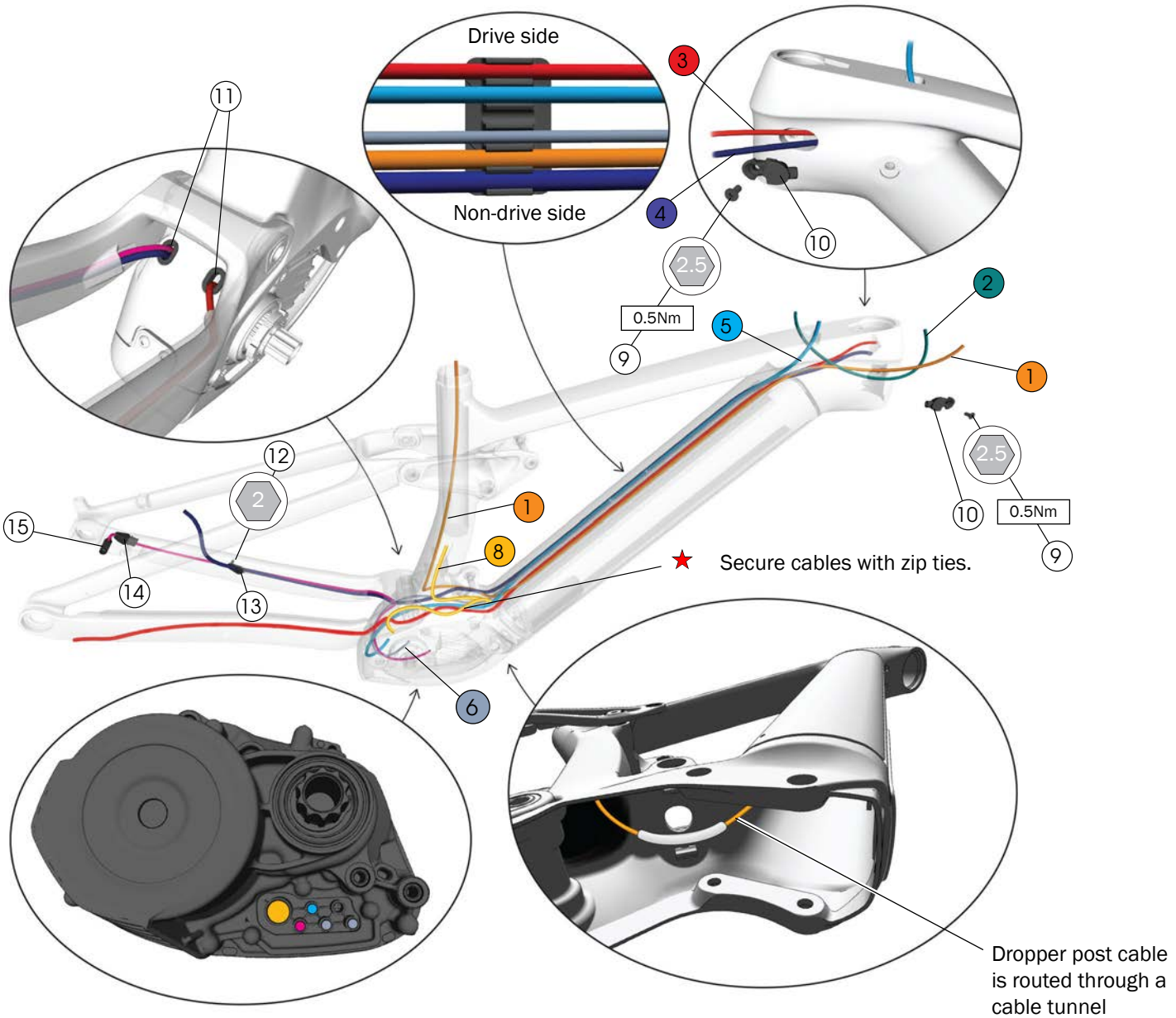

1. Dropper post
2. Display to remote
3. Derailleur
4. Rear brake
5. Display to drive unit
6. Front light (Aftermarket option)
7. Speed sensor
8. Battery power
9. Flat head screws — W532763
10. Cable guides — W519232
11. Cable exit grommets — W5255861
12. Countersink screw — W524884
13. Grommet — W543605
14. Speed sensor chainstay plug — W587873
15. Speed sensor — 5284750

★ Zip tie

Frame guards

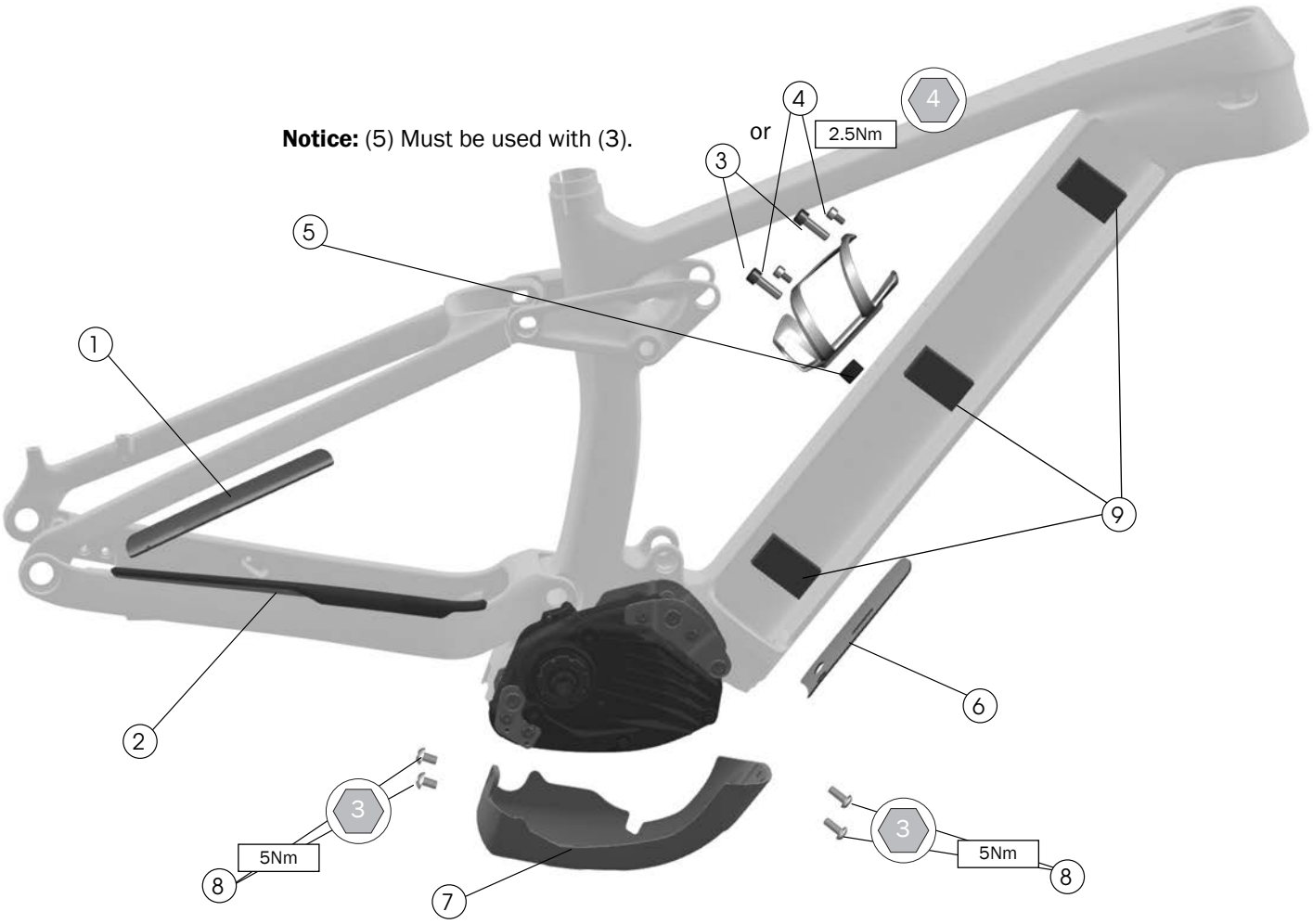

1. Seatstay guard — W5255862
2. Chainstay guard — W587594
3. Screws (S, M frames only) — W596821
4. Bolts (L and XL frames only) — W549307
5. Cage spacer (S, M frames only) — W5256157
6. Down tube guard — W590604
7. Drive unit guard — W5253938
8. Screws — W549305
9. Foam pads — W5307155

Adhesive guards and pads (1) (2) (6) (9)

Use isopropyl alcohol to clean the frame surface where the chainstay (2) and seatstay guards (1) attach. Wait for the alcohol to dry before applying the guards.

Notice: Do not clean the entire frame with isopropyl alcohol. Isopropyl alcohol could damage the paint.

RIB — battery assembly

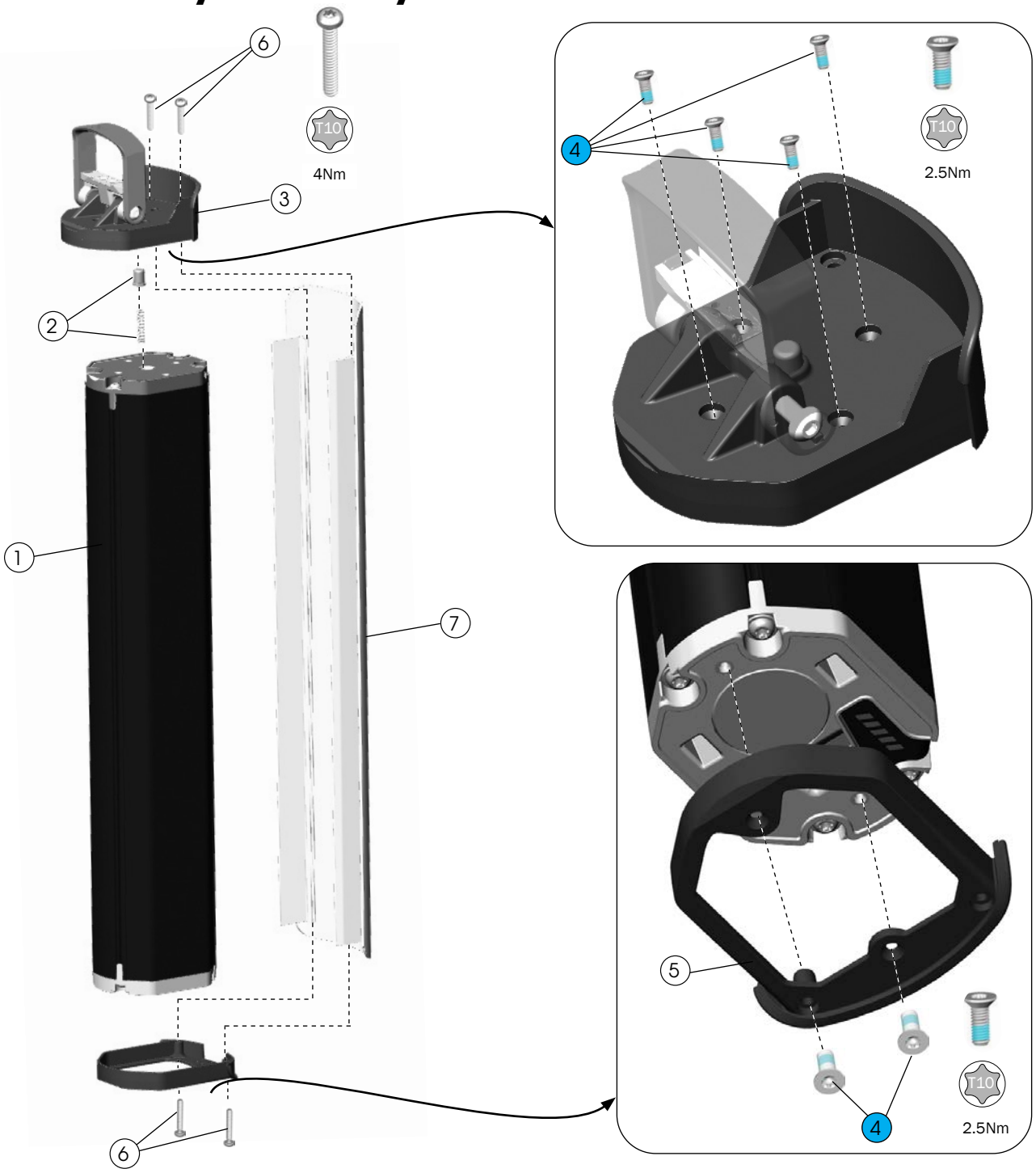

1. Battery, vertical, Smart System,
   S frame, 625Wh — EB12.100.012*
   M - XL frame -750Wh — 5288731
2. Push pin and spring — 5312675
3. Battery handle assembly — W5252236
4. Bolts, M3x8 — W5269016
5. Docking bracket — W5252240
6. Bolts, M3x20 — W5254060
7. Cover, 625Wh battery — 37359
   Cover, 750Wh battery — 37360
   Search trekbikes.com to find the color-matched part for your bike.

*Bosch part number. Not available on trekbikes.com.

RIB — docking assembly

Lower assembly

Upper assembly

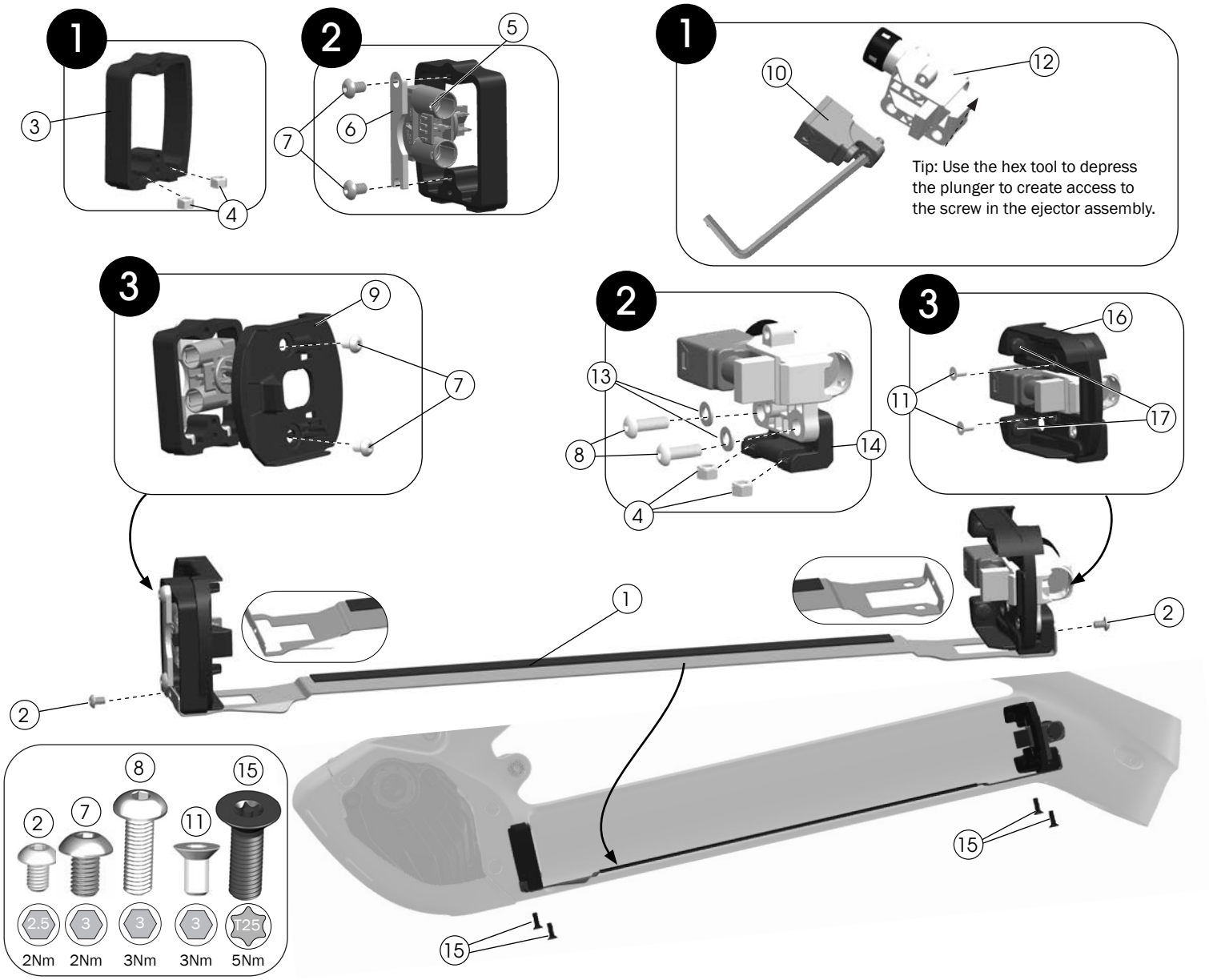

1. Alignment plate — W5252805
2. Screws
4. Locknuts
8. Screws
11. Countersunk bolts
15. T25 security screws
13. Washers

— 5257257

3. Lower docking bracket
14. Upper docking bracket

— 5277571

5. Battery connection plug — EB12.100.015*
6. Power connection retention bracket
7. Screws — W549307

— 5312122

9. Lower battery mounting plug — W5252293
16. Upper lock cover — W5252292
17. Bumpers — 579326
10. Ejector assembly — 579324
12. Lock assembly — W562311

*Bosch part number. Not available on trekbikes.com.

Drive system components

Drive unit and mounting bolts

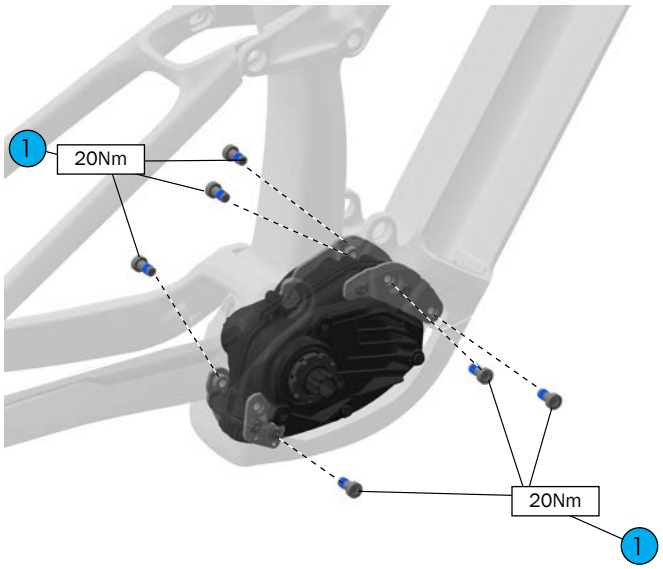

1. Mounting bolts, TP40 — 5265419 (Bosch 1270.016.470)

Battery charge port

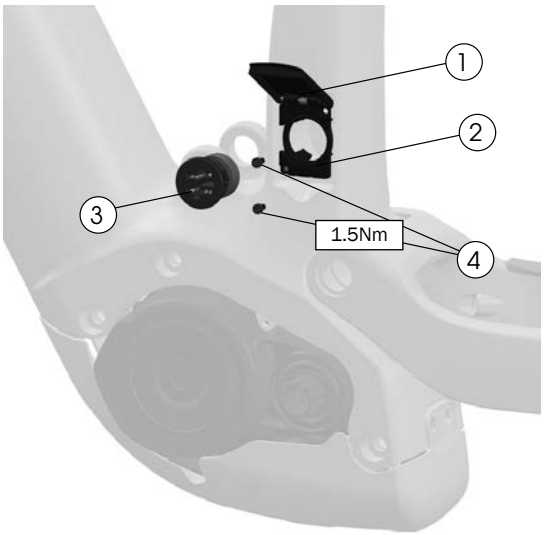

1. Charge port cover — 44374
   Search trekbikes.com to find the color-matched part for your bike.
2. Base — W5251862
3. Charge socket — EB12.120.04A*
4. Bolts — 5284849

*Bosch part number. Not available on trekbikes.com.

Speed sensor

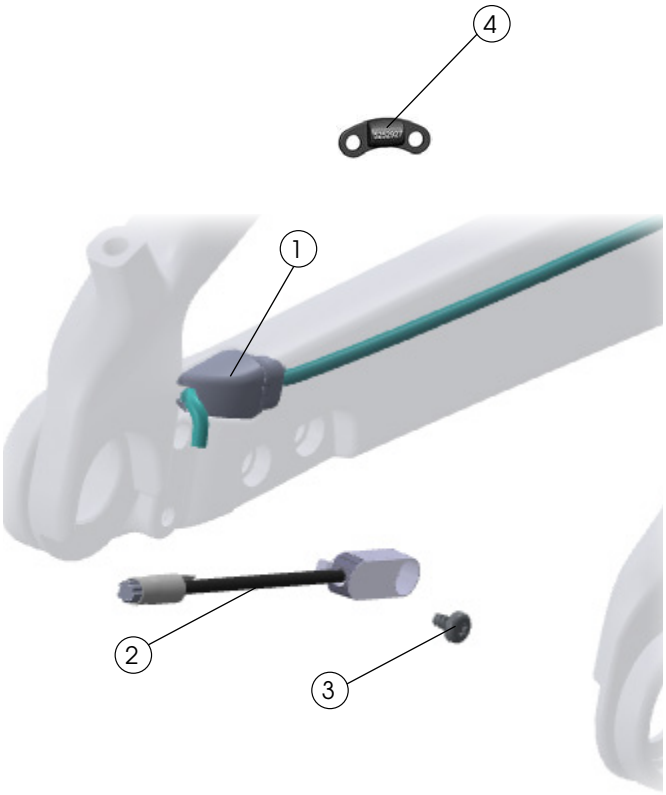

1. Speed sensor chainstay plug — W587873
2. Speed sensor — 5284750
3. Bolt — W562831
4. Rotor mount speed sensor magnet — W5252927

Specifications

Chainline (1x only)

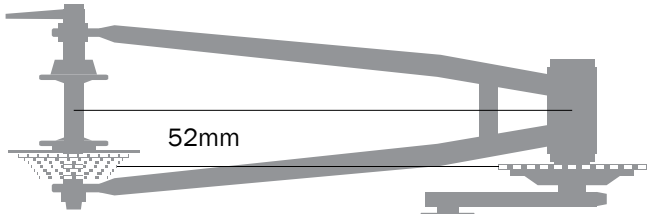

- Boost hub with offset chainring.

Chainring (1x only)

- 34T only

Rear brake mount

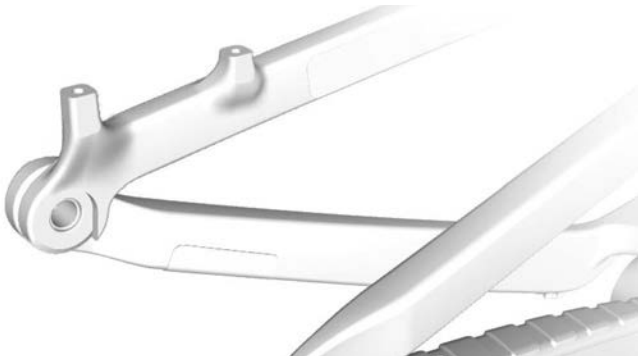

Minimum	Maximum
180mm, direct mount	Adaptable to 203mm

Maximum tire size

Notice: Measurements of actual tires may vary. Always verify there is sufficient clearance between the tire and the frame. Improper tire size could damage the bicycle frame. Trek recommends 6mm clearance above and on the sides of the tire.

Wheel set	Maximum tire size
29"	29" x 2.6"
27.5" rear with the mino link in the high position	27.5" x 2.8"

Water bottle fit on small frames

Rail 9.8: Use Bontrager Voda 15 bottle

9.9 with AirWiz: There is not enough clearance to fit a water bottle.

Seat post

WARNING

Always follow the seatpost manufacturer's minimum insertion recommendation. Failure to follow the recommendation could cause damage to the seatpost and result in injury to the rider.

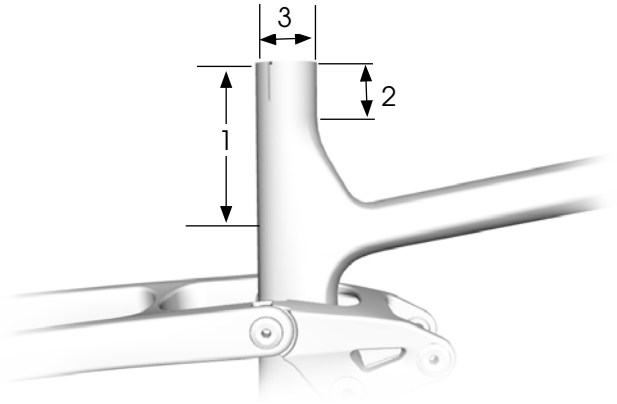

Item	Measurement		
1	Maximum insertion	**Frame**	
		S	230mm
		M	
		L	260mm
		XL	310mm
2	Minimum insertion		75mm*
3	Seat tube inside diameter		34.9mm
	Seat tube post clamp outer diameter		39.5mm

*Follow the seatpost manufacturer's guidelines.

Kickstand mount

- Requires kickstand mounting bracket W581379 and two M6x1.0x25mm bolts

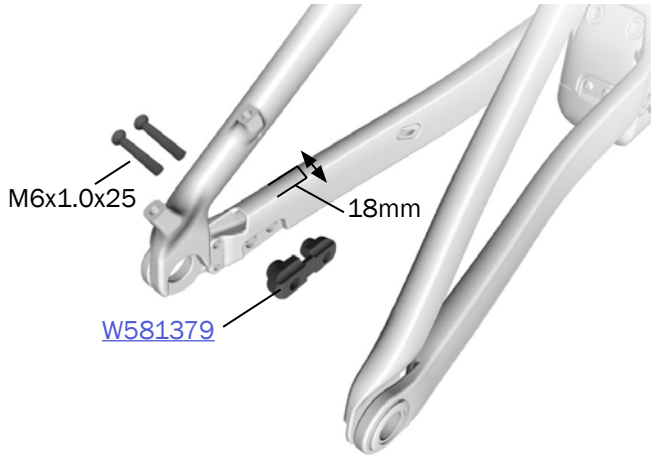

Suspension

The first step in suspension setup is to determine the sag. All other settings should be adjusted after determining the sag.

Refer to the suspension setup card included with your bike or the suspension calculator at Trekbikes.com/suspension-calculator.

For recommended rebound settings refer to the suspension calculator at Trekbikes.com/suspension-calculator.

Fork

WARNING

Exceeding the recommended maximum fork length could damage the bicycle and result in injury to the rider.

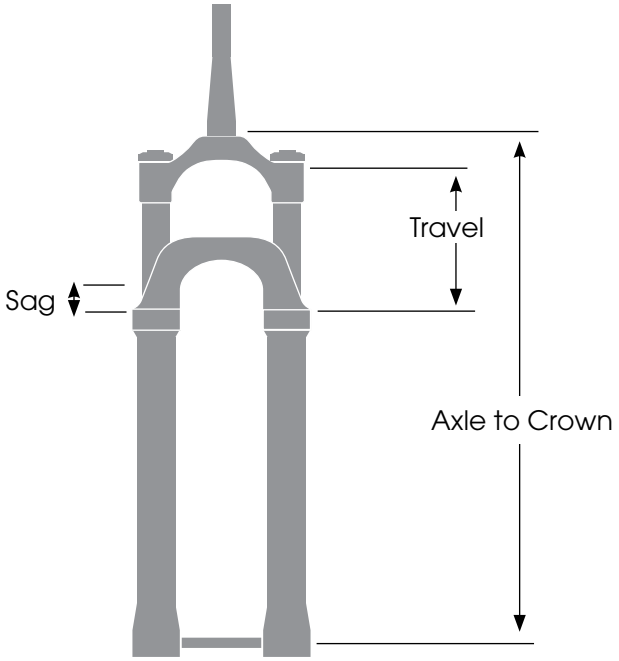

Frame/ Wheel Size	Axle to Crown (mm)		Travel (mm)	Sag (mm)
S, M, ML, L, XL, XL	Recommended	571-576	160	24
	Maximum	586	170	25.5

Shock

Mount	Width
Bottom mount	54mm
Top mount	40mm

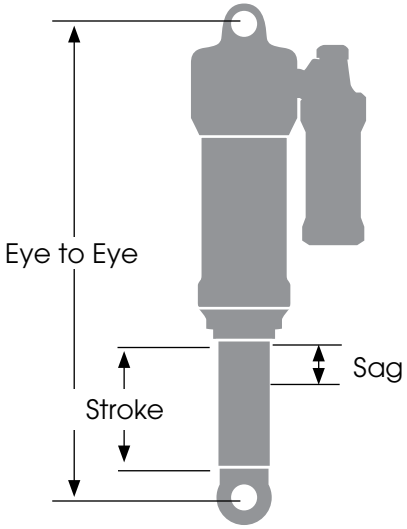

Description	Dimension
Eye-to-eye length	230mm
Stroke length	57.5mm
Recommended sag	30%, 17.25mm