TREK

Product Support

MY21 Powerfly FS Parts Quick Reference

POWERFLY

Product Support

MY21 Powerfly FS Parts Quick Reference

Item	Description	Part Number	Qty	Note
1	Integrated Speed Sensor	W1050748	1	
2	M4x9mm Bolt	580067	2	Torque 3Nm
3	Housing Clamp		2	
4	Housing Guide	W594006	2	
5	M3x12mm Bolt	W524884	2	

CABLE ROUTING

CABLE	COLOR
SHIFTER	RED
DROPPER	BLACK
CONTROLLER	GREEN
REAR BRAKE	BLUE
BATTERY POWER	GRAY
REAR LIGHT	PINK
SPEED SENSOR	YELLOW
CHARGE PORT	ORANGE

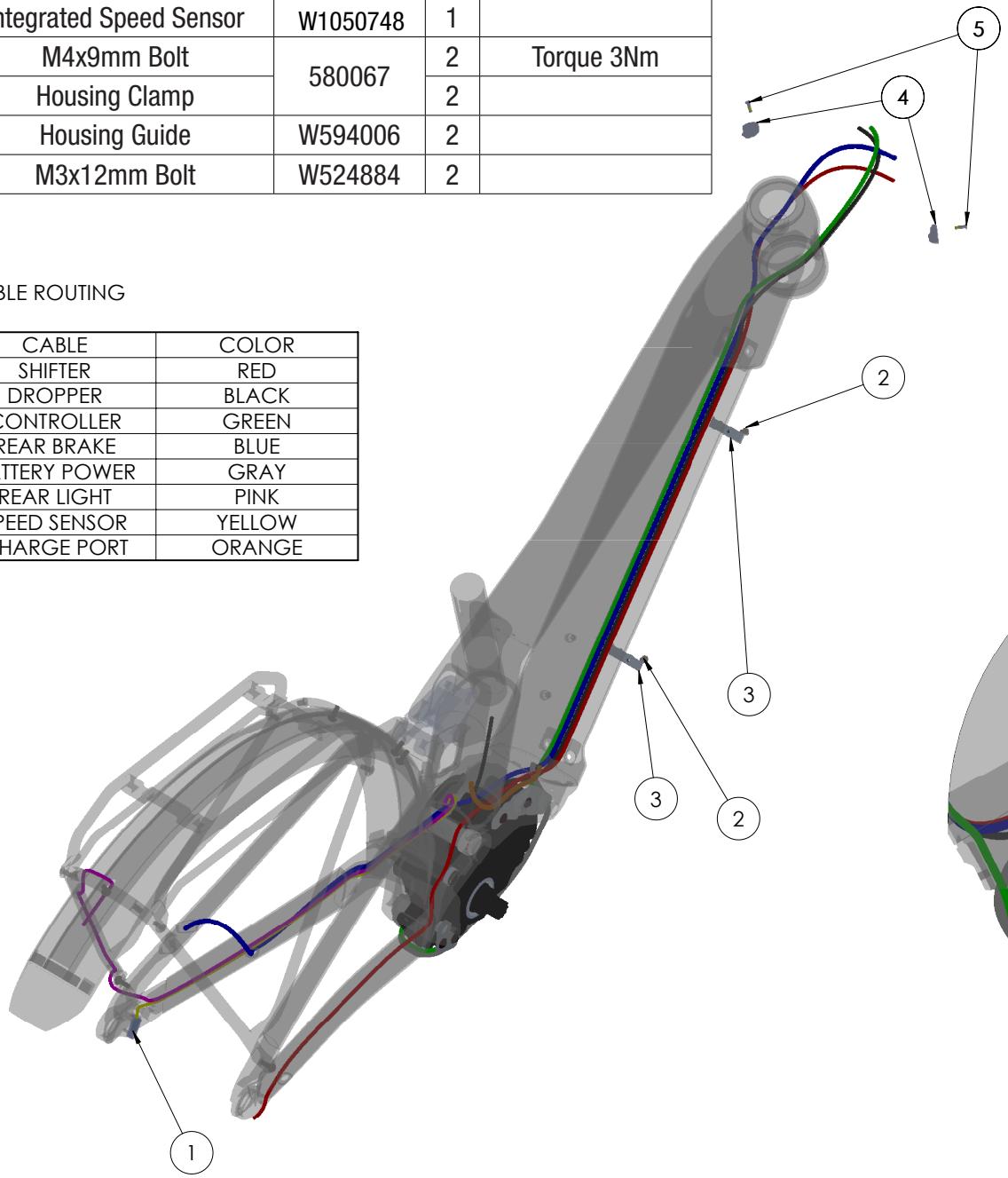

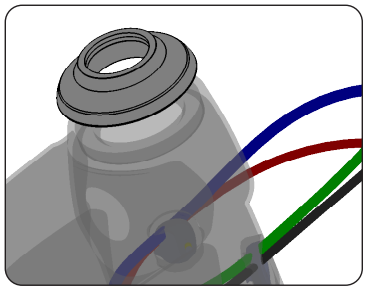

Headset Cover, 5252259

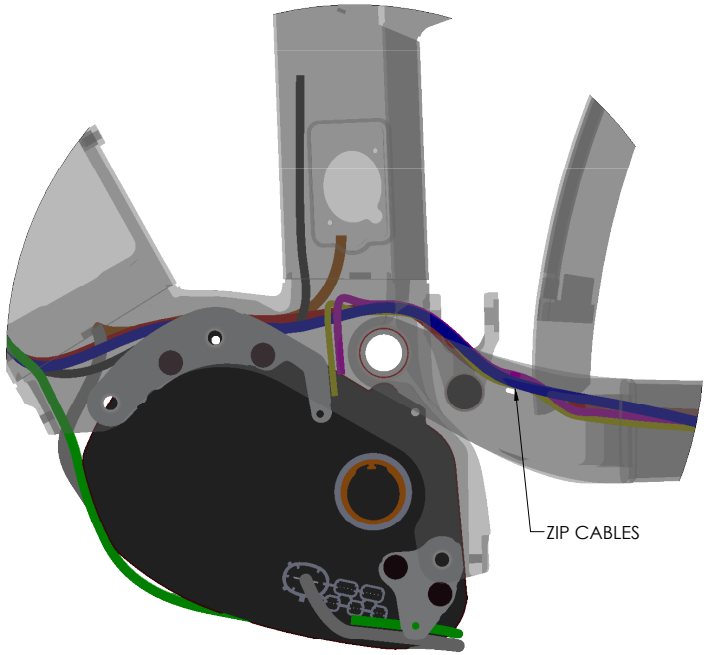

TREK

Product Support

MY21 Powerfly FS Parts Quick Reference

Item	Description	Part Number	Qty	Note
6	ABP Bearing	W583424	2	
7	ABP NDS Nut	W583419	1	
8	ABP Bolt	W583420	1	
9	ABP Universal Hanger	W583423	1	Torque 25Nm, LH
10	Thru Axle 12x184.5mm M12	W583469	1	Torque 10Nm
11	Chainstay Guard	W587594	1	

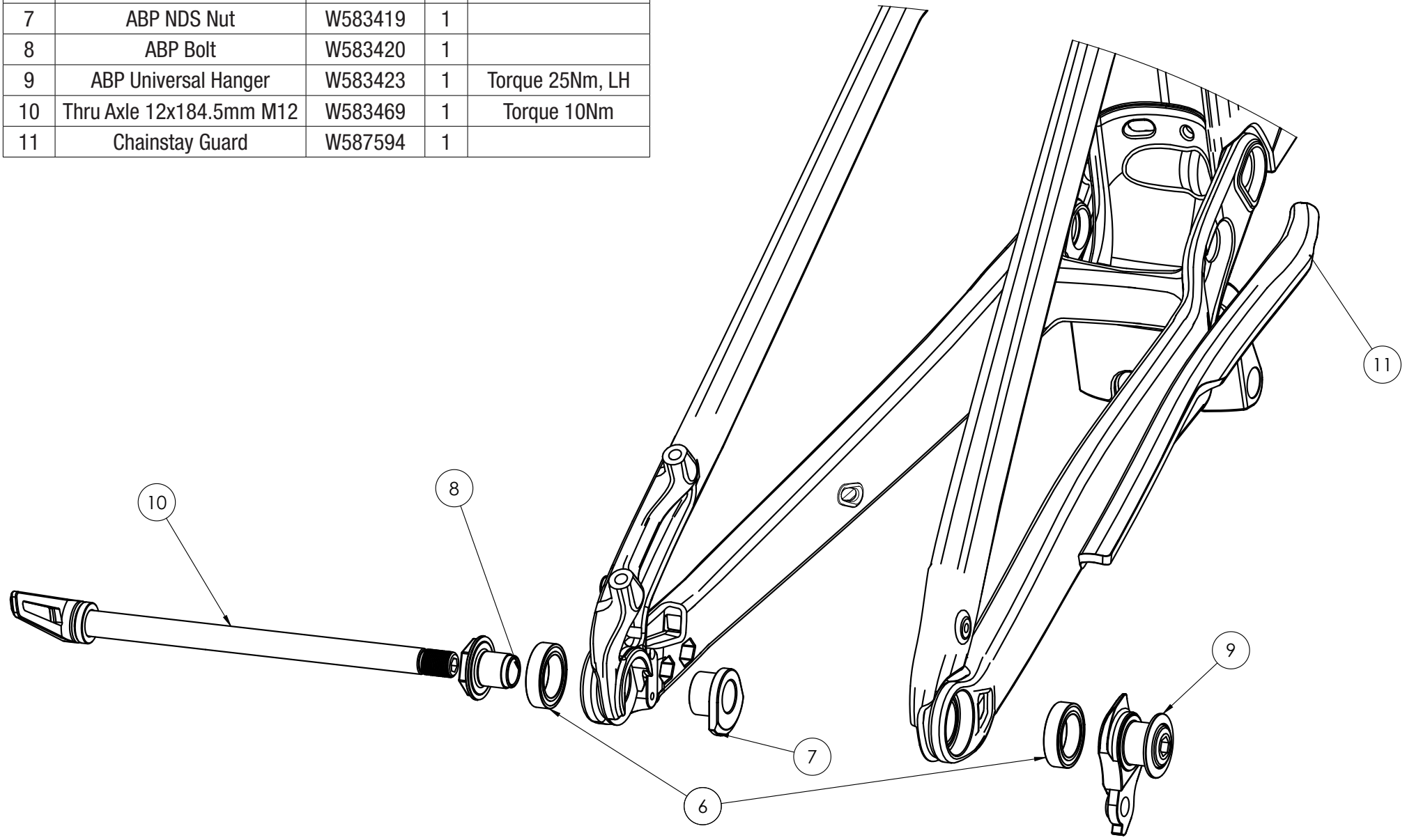

Product Support

MY21 Powerfly FS Parts Quick Reference

Item	Description Part	Number	Qty	Note
12	Main Pivot Axle	5256639	1	Torque 30Nm
13	Main Pivot Axle Nut	W584134	1	
14	Spacer, 22x17x3mm	W440921	2	
15	Main Pivot Sleeve	5256639	1	
16	Main Pivot Bearing	W302025	2	
17	Rocker Pivot Axle			Torque 17Nm
18	Rocker Pivot Axle Nut	5256640	1	
19	Spacer, 18x12x3mm			
20	Rocker Pivot Bearing	W586543	2	
21	Seatstay Bolt	W600629	2	Torque 17Nm
22	Seatstay Bearing	W529224	2	
23	Spacer, 16x10x3mm	W529969	2	

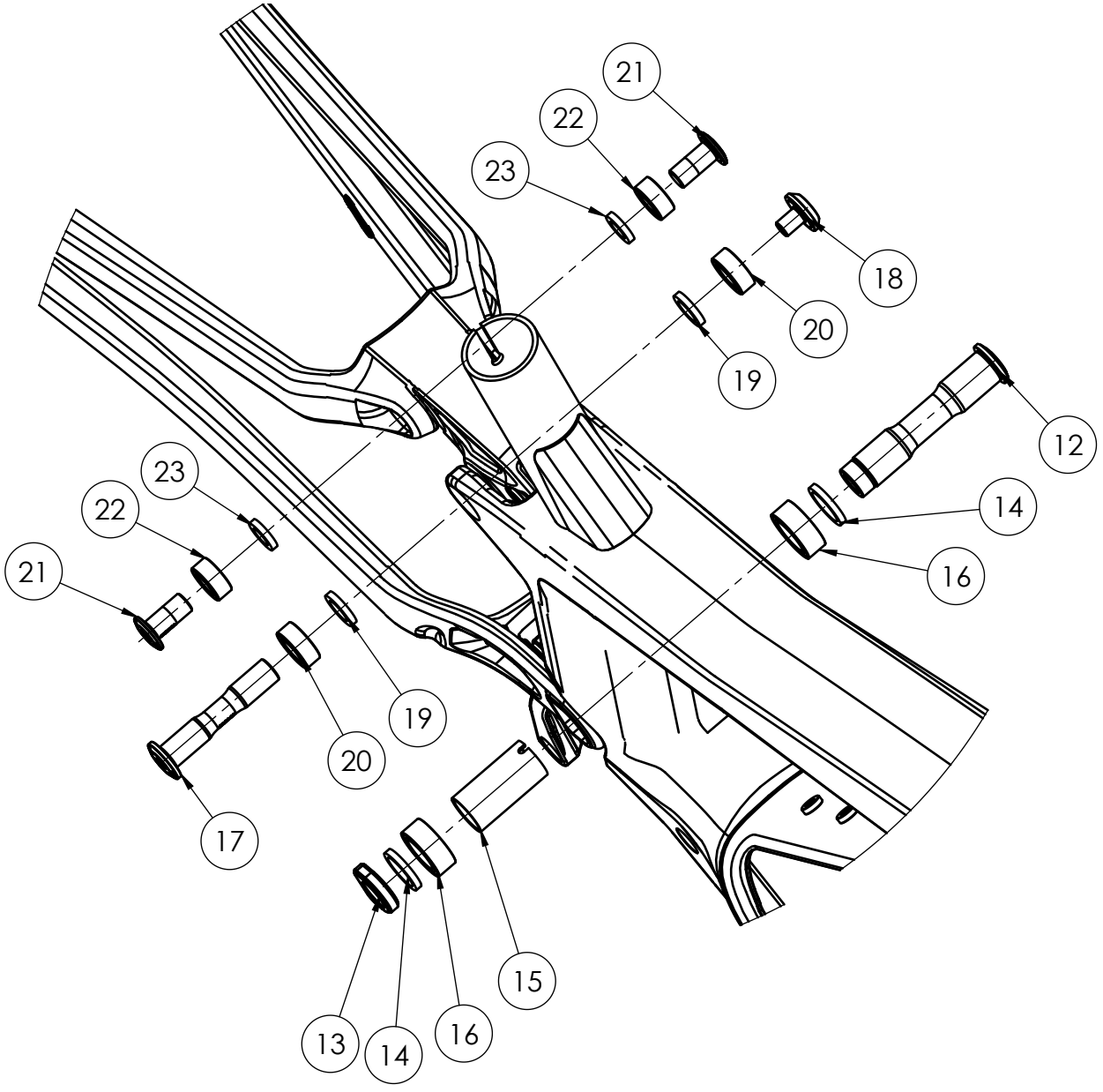

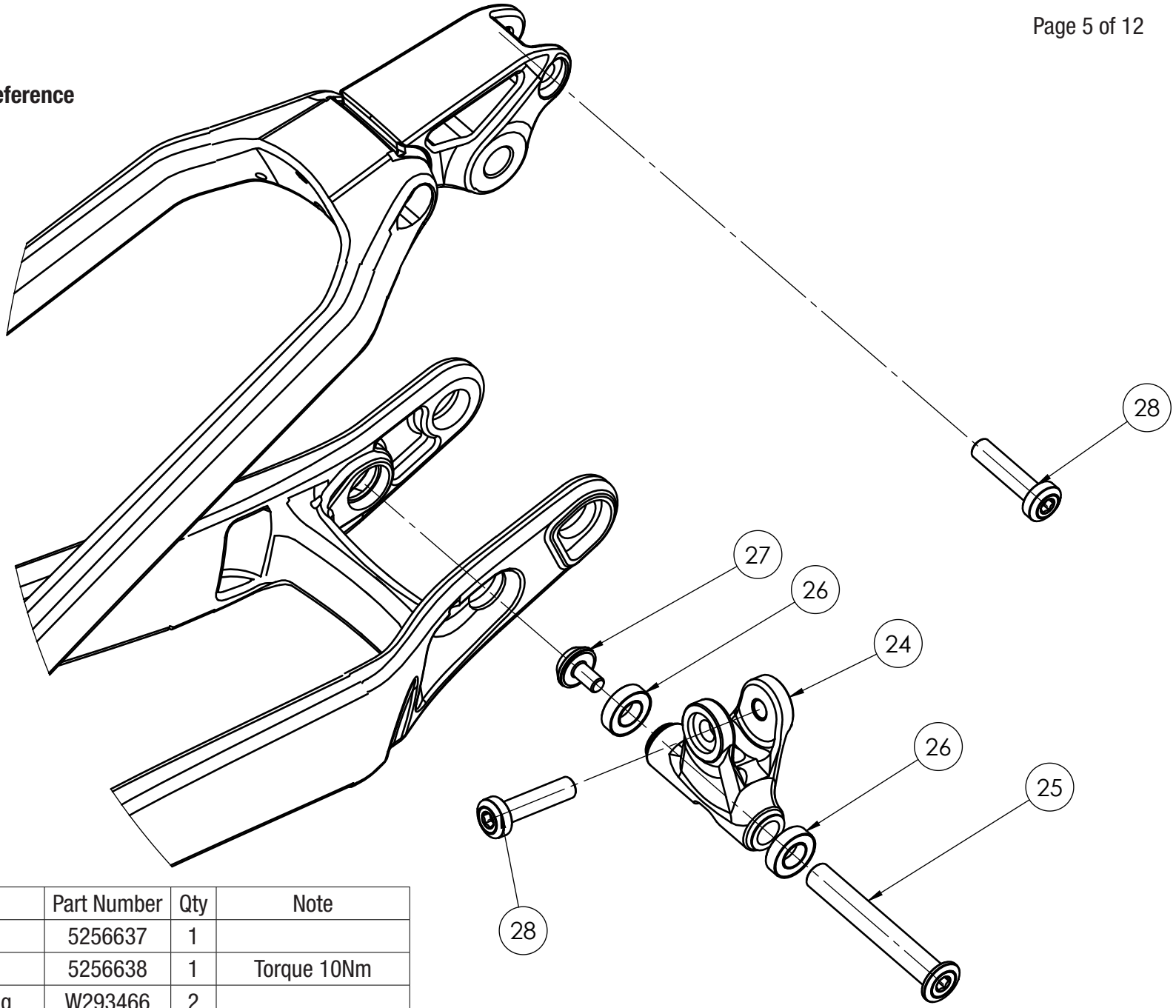

Item	Description	Part Number	Qty	Note
24	Shock Linkage	5256637	1	
25	Lower Shock Axle	5256638	1	Torque 10Nm
26	Shock Linkage Bearing	W293466	2	
27	Lower Shock Axle Bolt	5256638	1	
28	Upper Shock Axle	W600364	2	Torque 10Nm

Product Support

MY21 Powerfly FS Parts Quick Reference

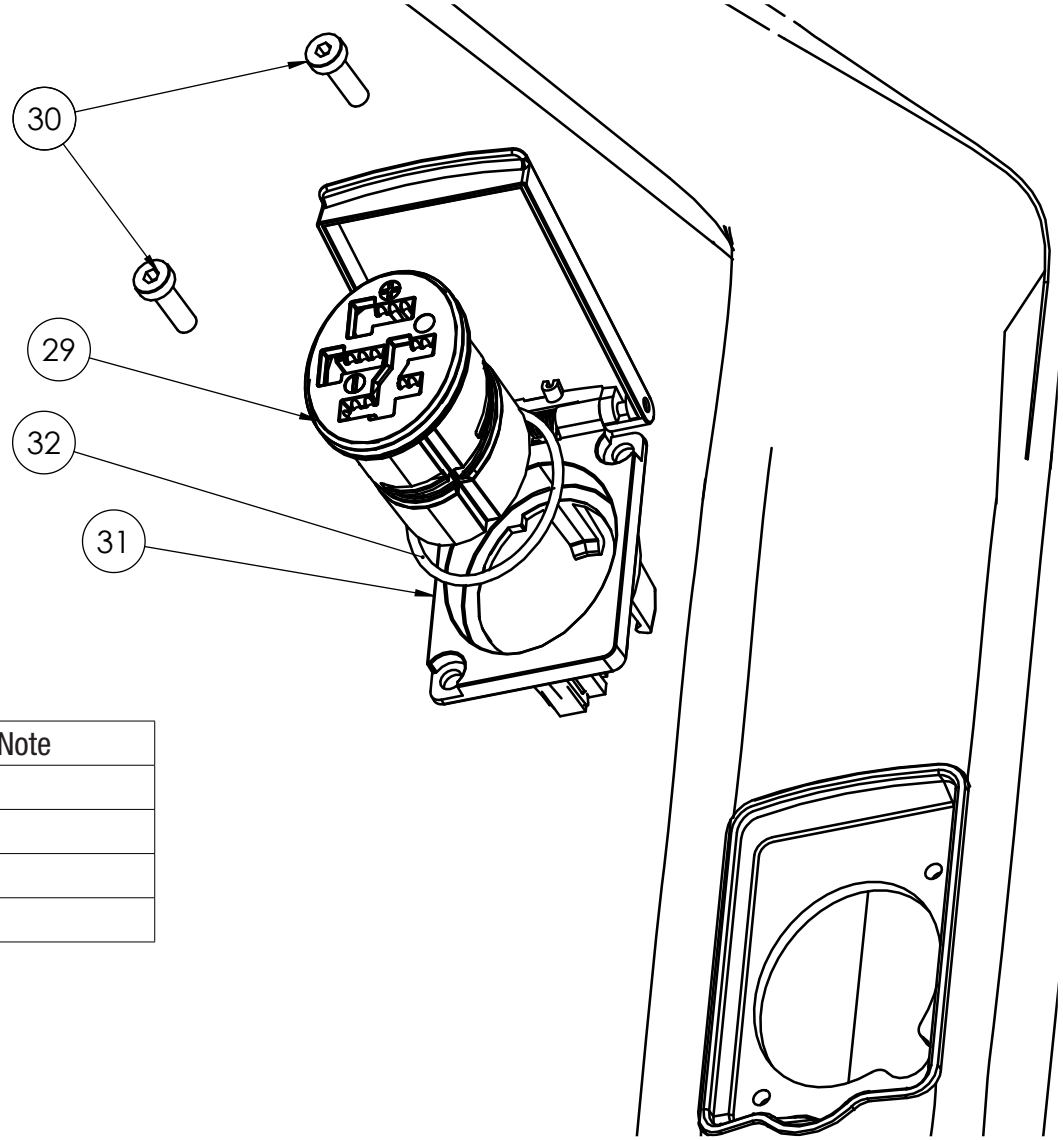

Item	Description	Part Number	Qty	Note
29	Charge Plug	BOSCH	1	
30	M3x10mm Bolt	W593445	2	
31	Charge Port Door		1	
32	Charge Plug O-Ring	BOSCH	1	

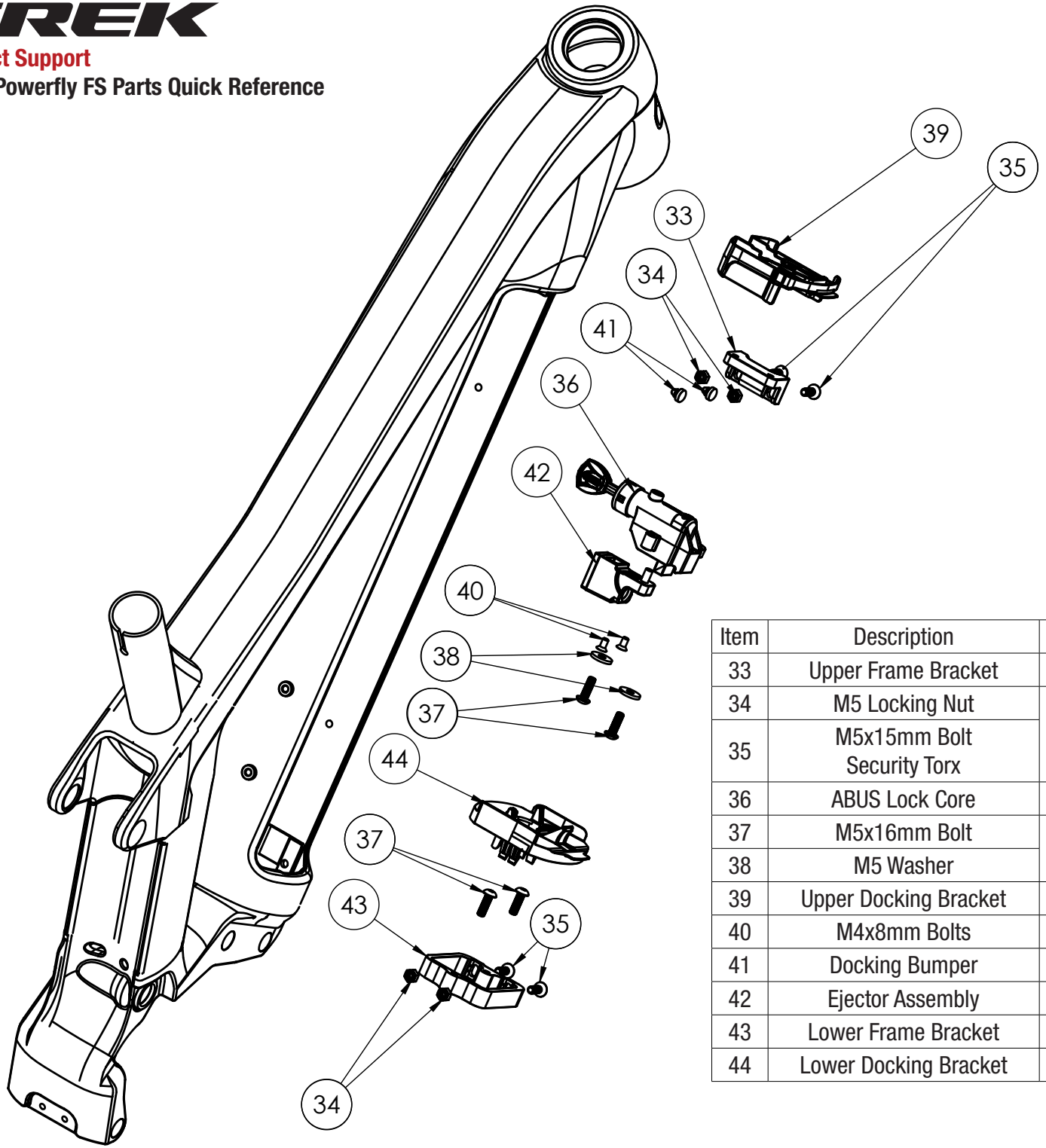

Item	Description	Part Number	Qty	Note
33	Upper Frame Bracket	580066	1	
34	M5 Locking Nut	599883	4	
35	M5x15mm Bolt Security Torx			Torque 5Nm, Apply Grease to Head
36	ABUS Lock Core	W562311	1	
37	M5x16mm Bolt	579247	4	Torque 5Nm
38	M5 Washer		2	
39	Upper Docking Bracket	584097	1	
40	M4x8mm Bolts	579247	2	Torque 2Nm
41	Docking Bumper	579326	2	
42	Ejector Assembly	579324	1	Torque 5Nm
43	Lower Frame Bracket	580066	1	
44	Lower Docking Bracket	584097	1	

Item	Description	Part Number	Note
A	RIB Battery Cover	1049274	Lithium / Chrome
		1049277	Gunmetal / Black
		1049280	White / Chrome
		1049281	Purple Flip / Anthracite
		1049284	Radioactive Red / Black
		1049285	Orange / Chrome

Item	Description	Part Number	Qty	Note
B	Handle Assembly	572657	1	
C	Spring Cap	572657	1	
D	Battery Handle Spring	W577275	1	
E	M4x8mm Bolt	579092	6	Torque 2.4Nm
F	Lower Battery Cover	W555588	1	
G	M3x20mm Bolt	579092	4	
H	500W RIB Spacer	W582323	1	
I	M4x12mm Bolts	W582323	4	Torque 2.4Nm
J	12x4x1mm Washer	n/a	4	

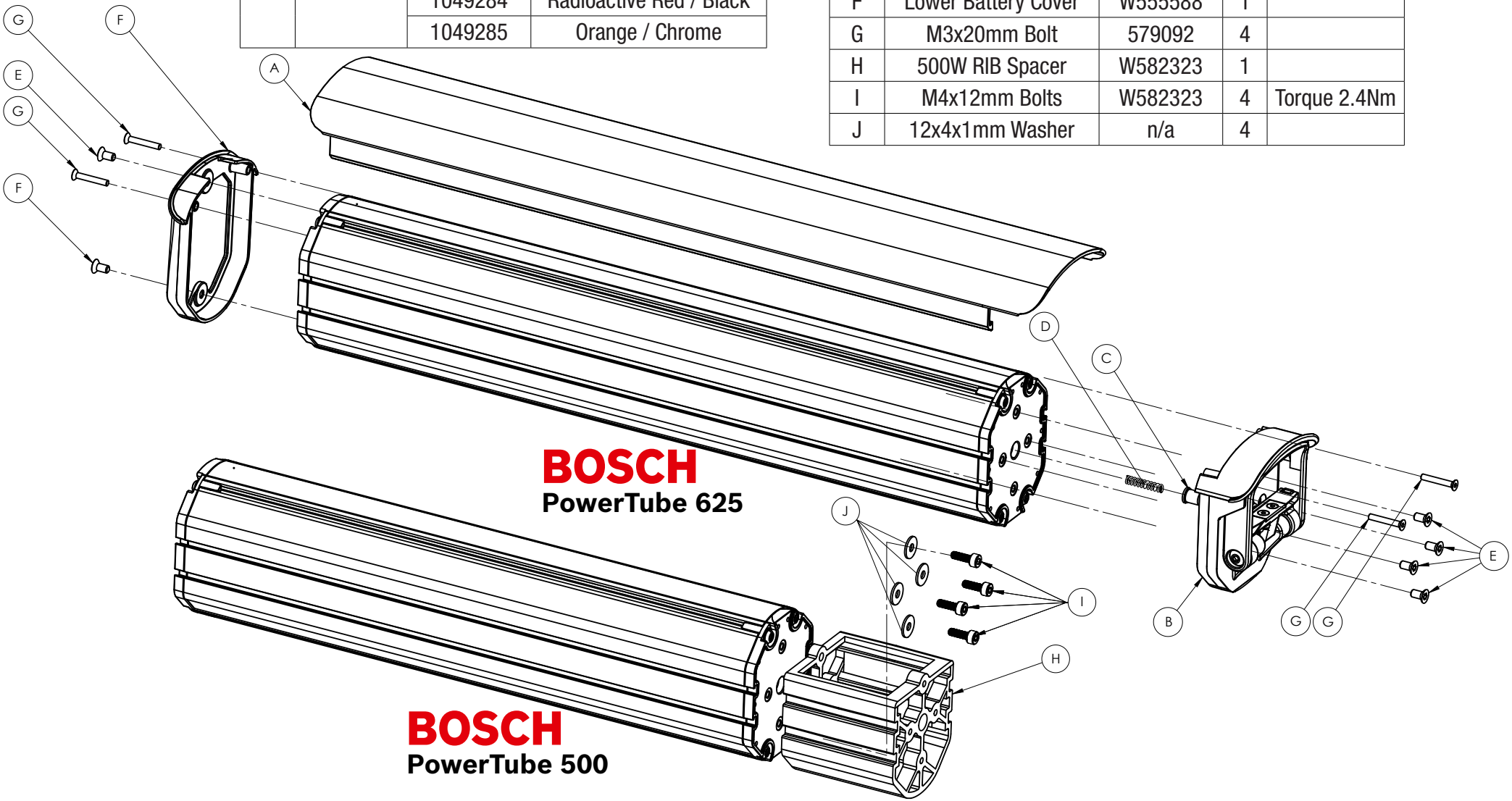

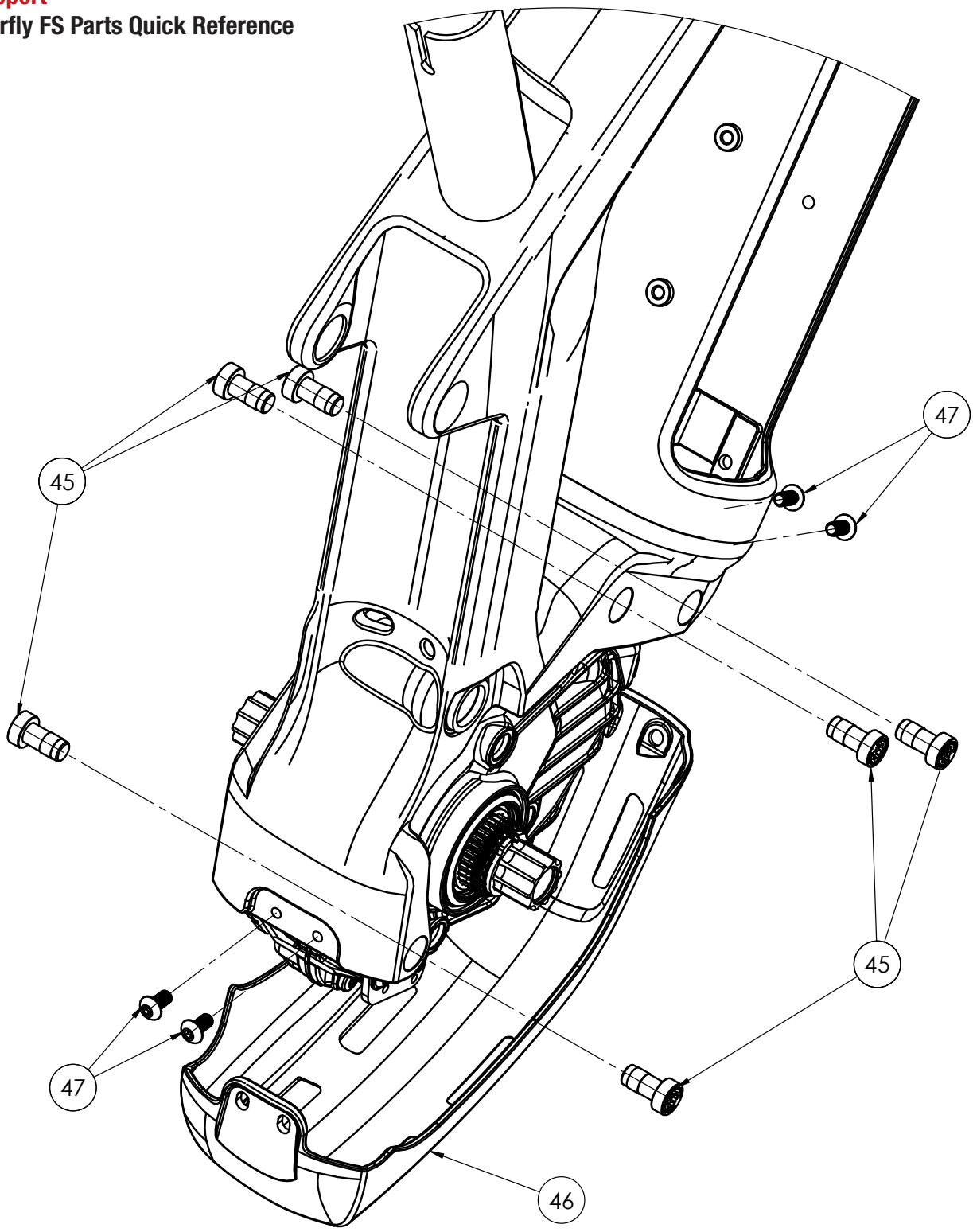

Item	Description	Part Number	Qty	Note
45	Motor Mounting Bolt	BOSCH	4	
46	Motor Armor	W586963	1	
47	M5x10mm Bolt	W549305	4	Torque 5Nm

Product Support

MY21 Powerfly FS Parts Quick Reference

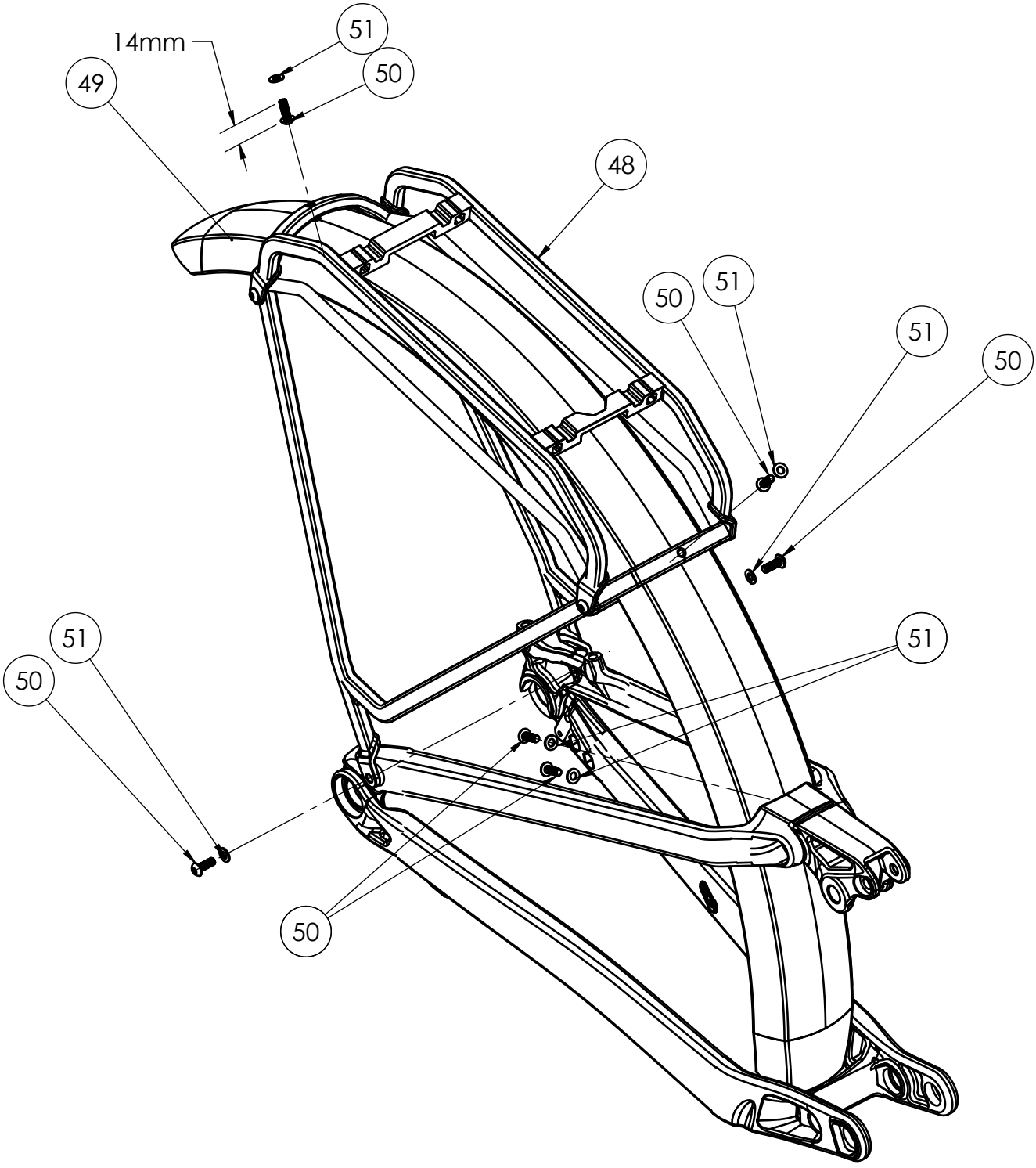

Item	Description	Part Number	Qty	Note
48	Powerfly FS Rack	W600300	1	
49	Powerfly FS Rear Fender	W600725	1	
50	M5x14mm Bolt	5251710	6	
51	M5x1mm Washer		6	

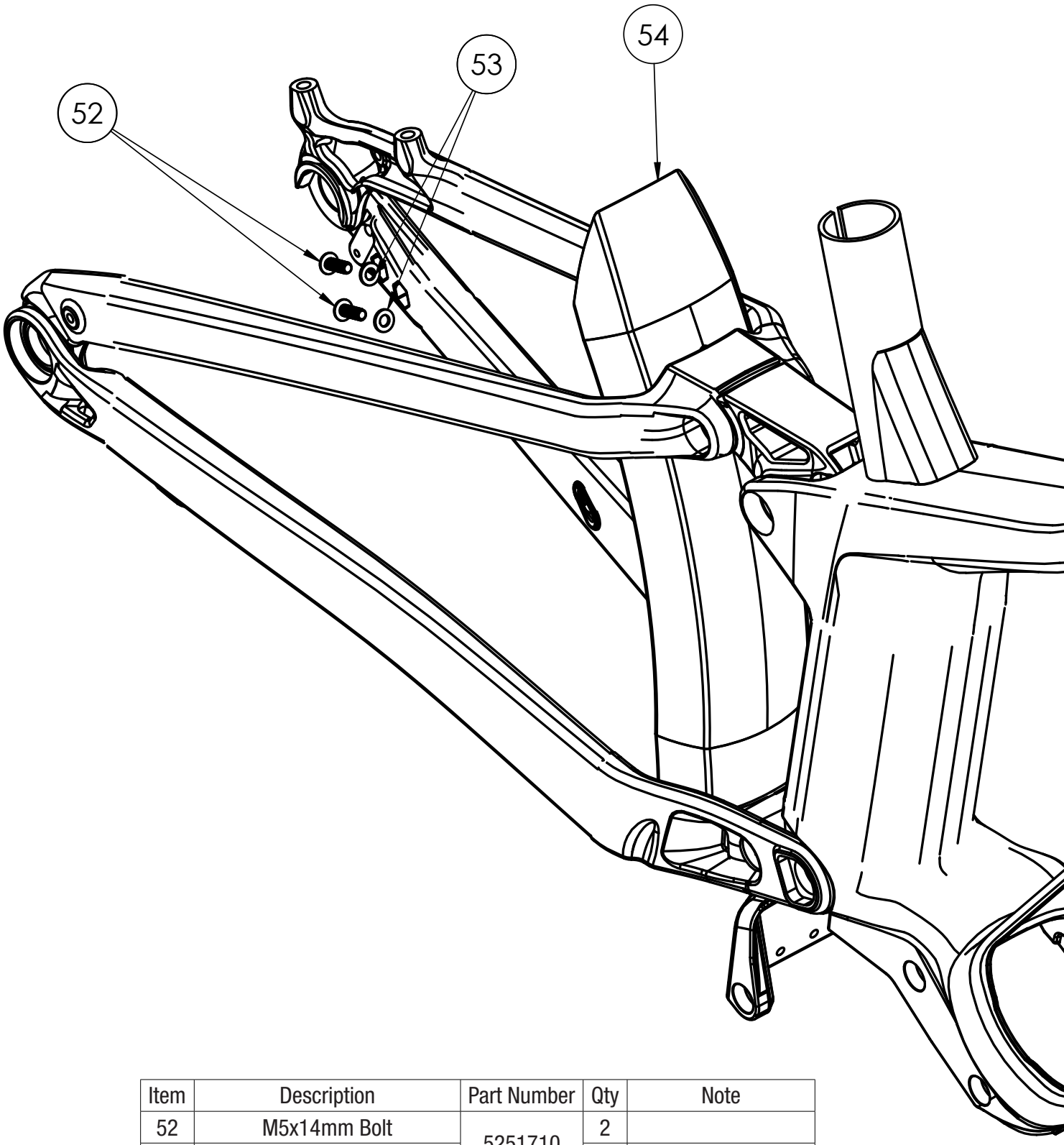

Item	Description	Part Number	Qty	Note
52	M5x14mm Bolt	5251710	2	
53	M5x1mm Washer		2	
54	Powerfly FS Mini Rear Fender	W1040072	1	

TREK

Product Support

MY21 Powerfly FS Parts Quick Reference

29" Wheel

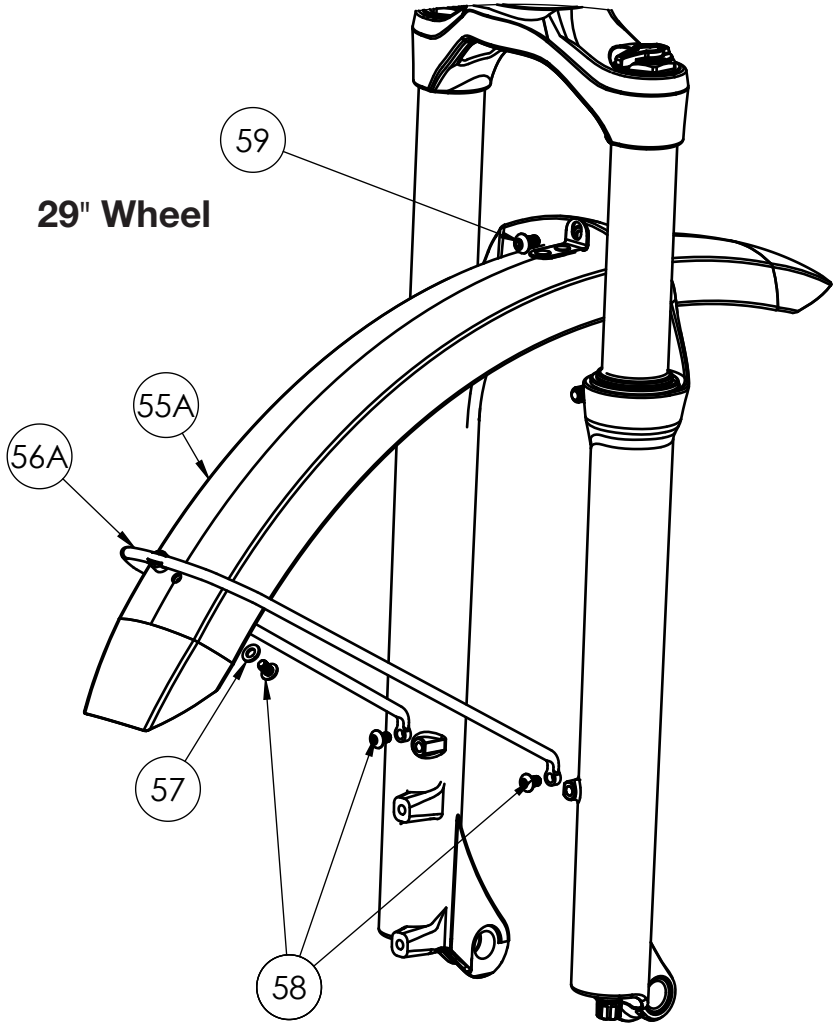

Item	Description	Part Number	Qty	Note
55A	Front Fender, 29”	601257	1	Fender and parts are only compatible with the originally equipped SR SUNTOUR fork.
56A	Fender Strut, 29”		1	
57	M5x1mm Washer	601267	1	
58	M5x8mm Bolt		3	
59	M6x10m Bolt		1	

27.5" Wheel

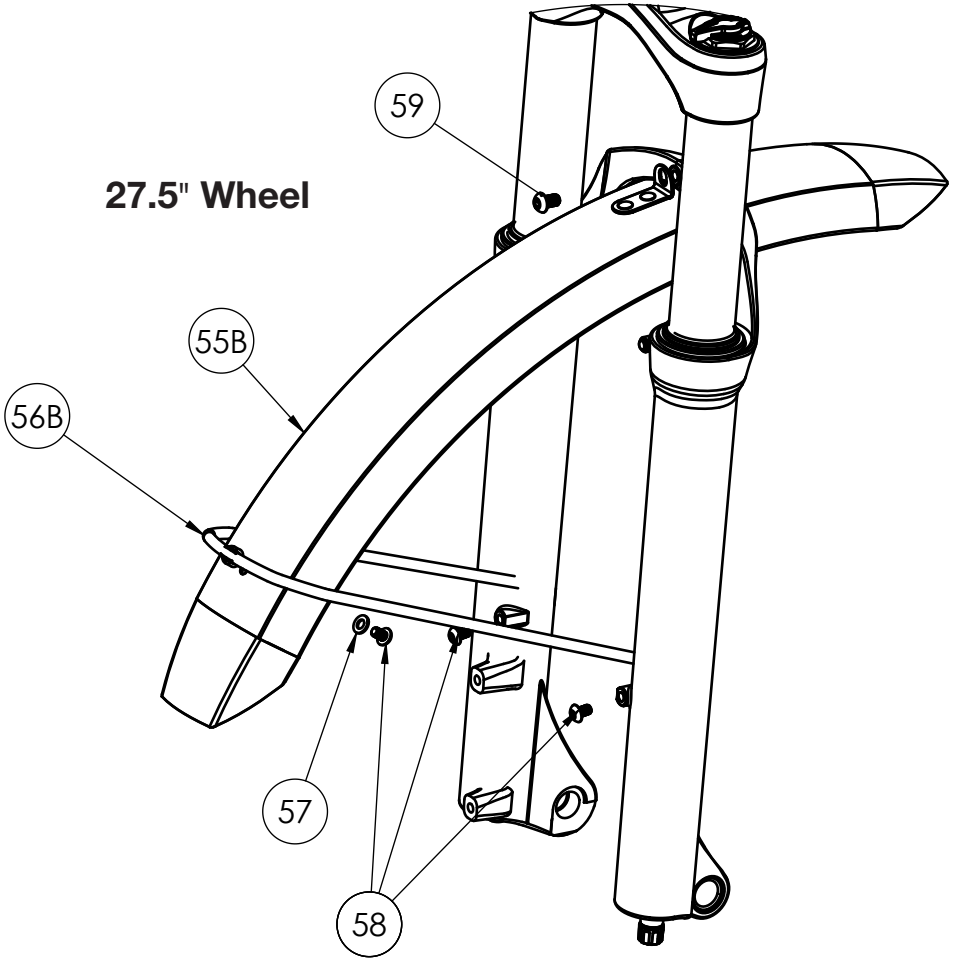

Item	Description	Part Number	Qty	Note
55B	Front Fender, 27.5”	601256	1	
56B	Fender Strut, 27.5”		1	
57	M5x1mm Washer	601267	1	
58	M5x8mm Bolt		3	
59	M6x10m Bolt		1	