TREK

Product Support

MY20 Fuel EX Carbon Parts Quick Reference

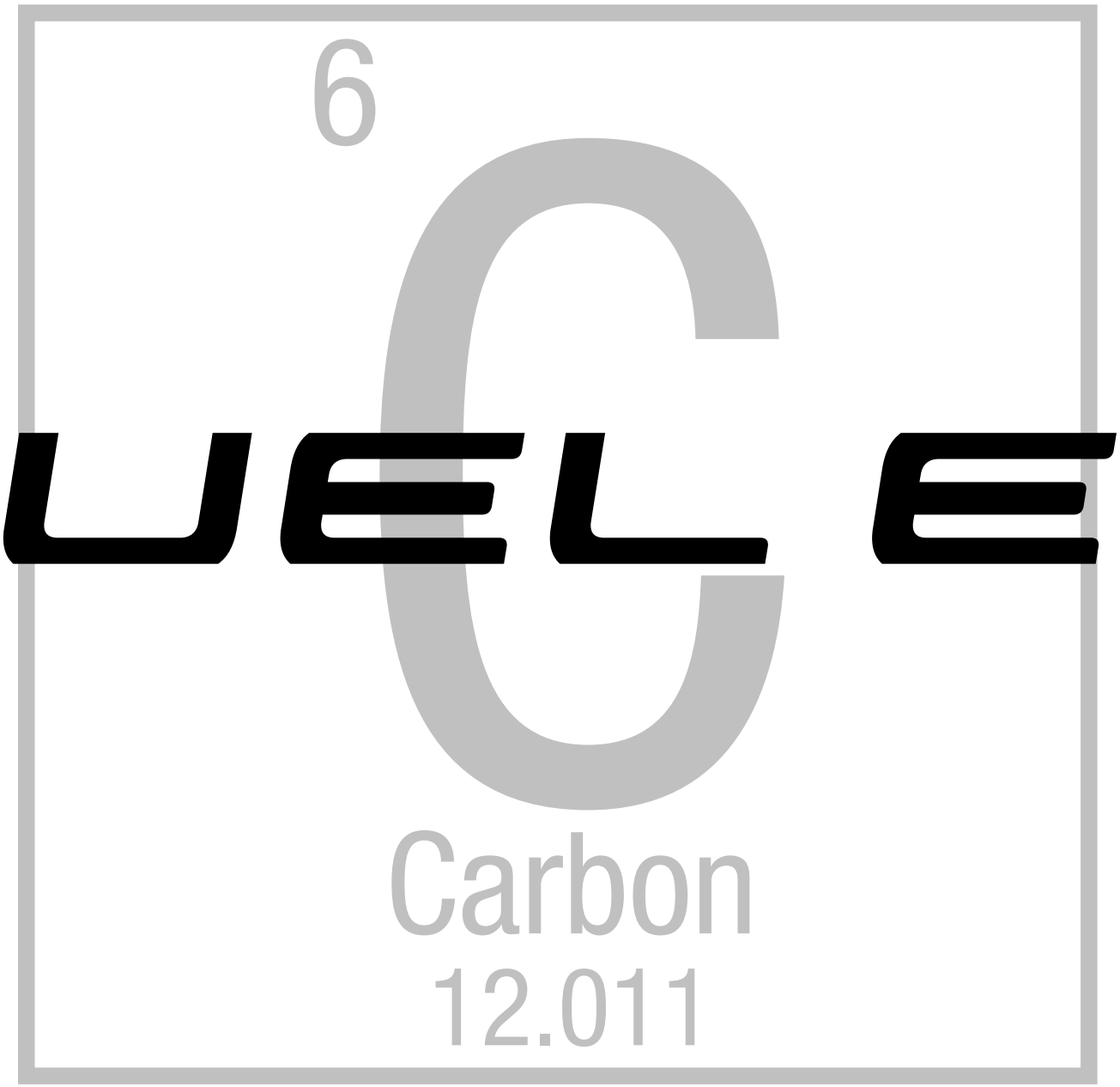

FUEL EX

Product Support

MY20 Fuel EX Carbon Parts Quick Reference

Item	Description	Part Number	Qty	Note
1	Mainframe		1	
2	Seatstay		1	
3	Chainstay		1	
4	Upper Downtube Armor	W529228	1	
5	Knockblock Chip	536723	1	
6	M4x16mm Bolt	W532763	4	Torque 3Nm
7	“Control Freak” Cable Guide	W519232	1	
8	Rocker Link			
9	Frame Storage Door	W583862	1	
10	Chainstay Guard	W583087	1	
11	Seatstay Guard	W583089	1	
12	Lower Downtube Guard	W583088	1	
13	M4x6mm Bolt	1042535	2	2x per bike
14	Shaped M4 Nut		1	

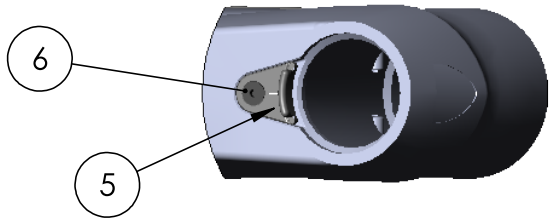

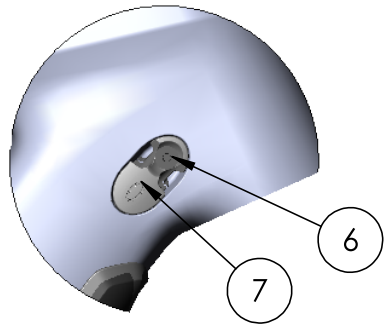

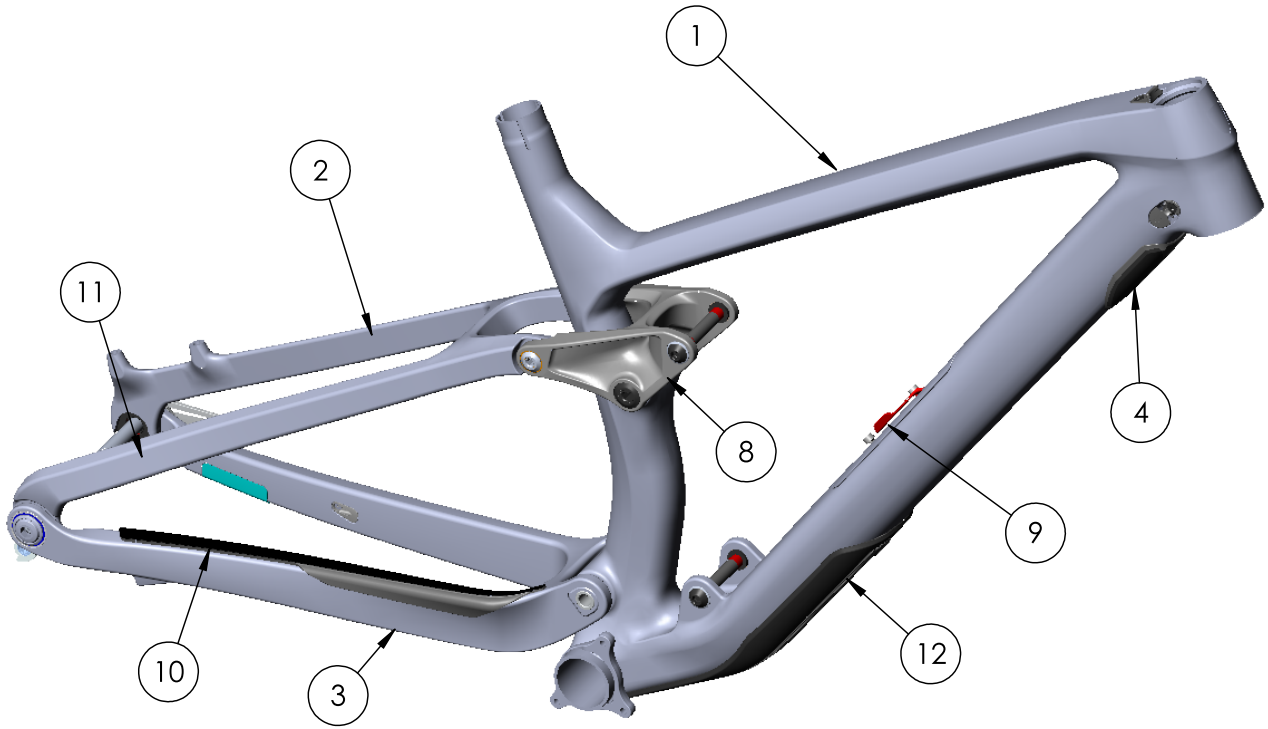

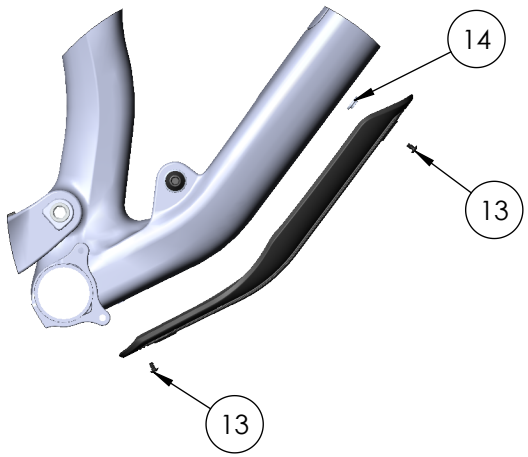

TREK

Product Support

MY20 Fuel EX Carbon Parts Quick Reference

Item	Description	Part Number	Qty	Note	
13	Mino Link Bolt	W579296	2	Torque 17Nm	
14	Rocker:Seatstay Bearing	W529224	2		
15	Rocker:Seatstay Spacer	W529969	2		
16	Mino Link Nut	W529223	2		
17	Rocker Axle	W535469	1	Torque 22Nm	Kit 599910
18	Rocker Axle Spacer	W290057	2		
19	Rocker Bearing	W586543	2		
20	Rocker Pivot Sleeve	W310155	1		
21	Rocker Axle Nut	W311582	1		
22	Main Pivot Axle	599909	1	Torque 30Nm	Kit 599909
23	Main Pivot Spacer	W440921	2		
24	Main Pivot Bearing	W302025	2	26x17x10mm	
25	Main Pivot Nut	W584134	1		
26	Main Pivot Sleeve	599909	1		

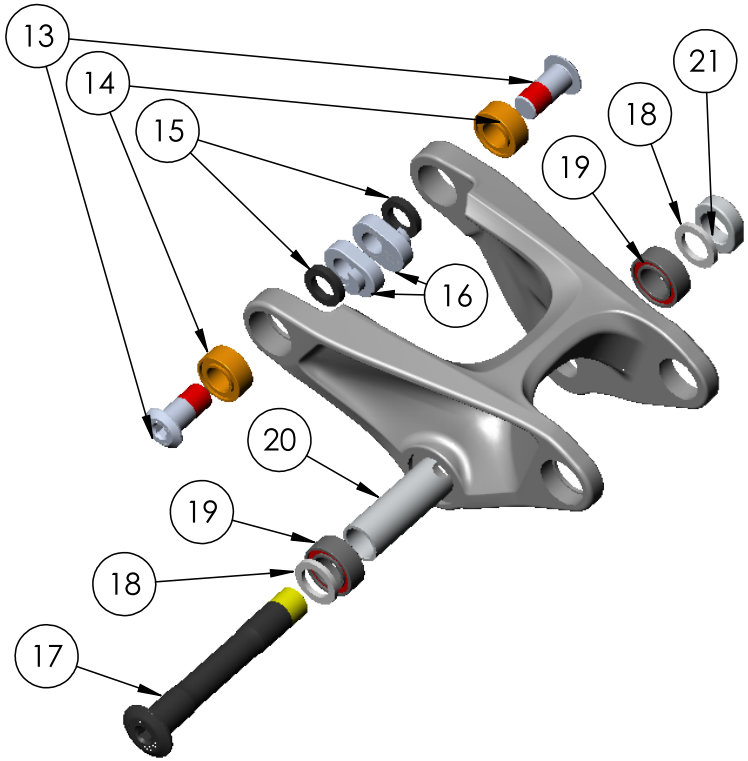

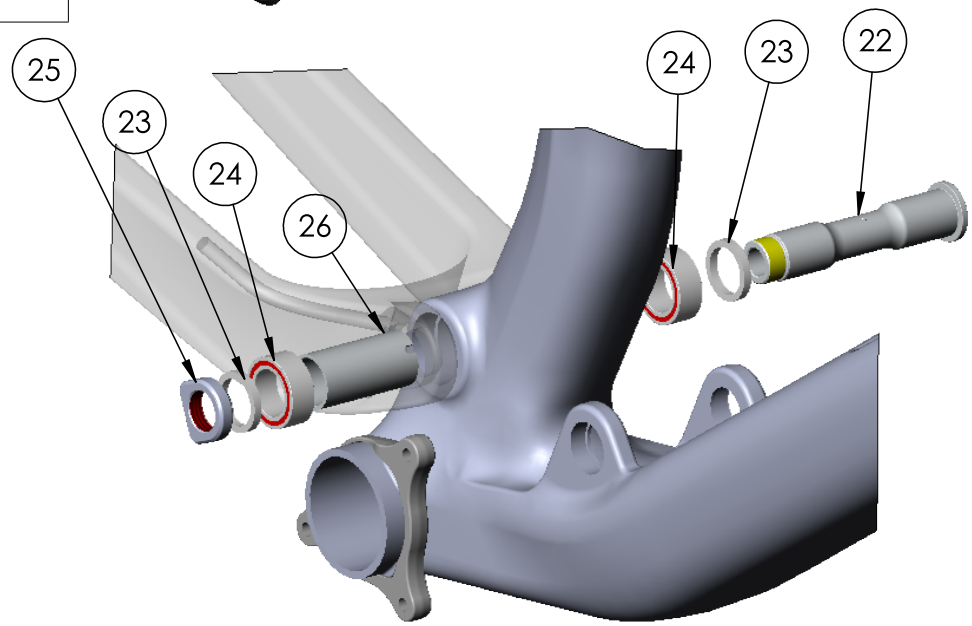

Item	Description	Part Number	Qty	Note
14	Shock Bearing Spacer	W529969	4	
27	Thru Shaft Bolt	W583804	4	Torque 17Nm
28	Shock Bearing	W293466	4	
29	Upper Shock Axle	599898	1	
30	Shock Axle Cap Bolt	599898	2	Torque 10Nm
31	Lower Shock Axle	599899	1	

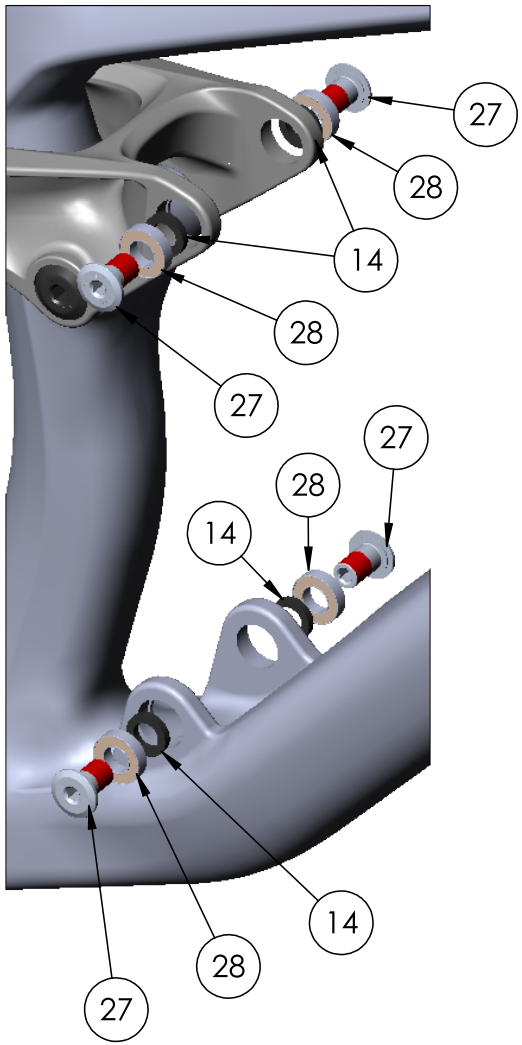

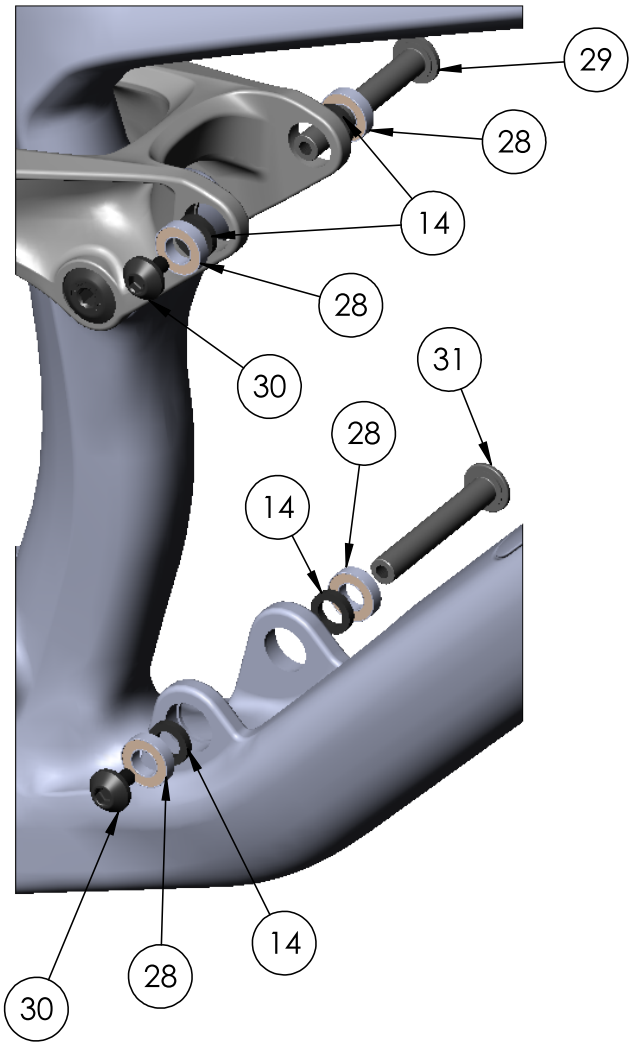

Product Support

MY20 Fuel EX Carbon Parts Quick Reference

Item	Description	Part Number	Qty	Note
32	ABP Bearing	W583424	2	20x30x7mm
33	Axle Guide	W583419	1	
34	23mm ABP Nut	W583420	1	Torque 15Nm
35	ABP Spacer	W583422	2	25x20x3mm
36	Thru Axle, Boost 148	W583469	1	Torque 10Nm 184.5mm Length M12x1.0x15.5mm Threading
37	Derailleur Hanger	W583423	1	Torque 25Nm

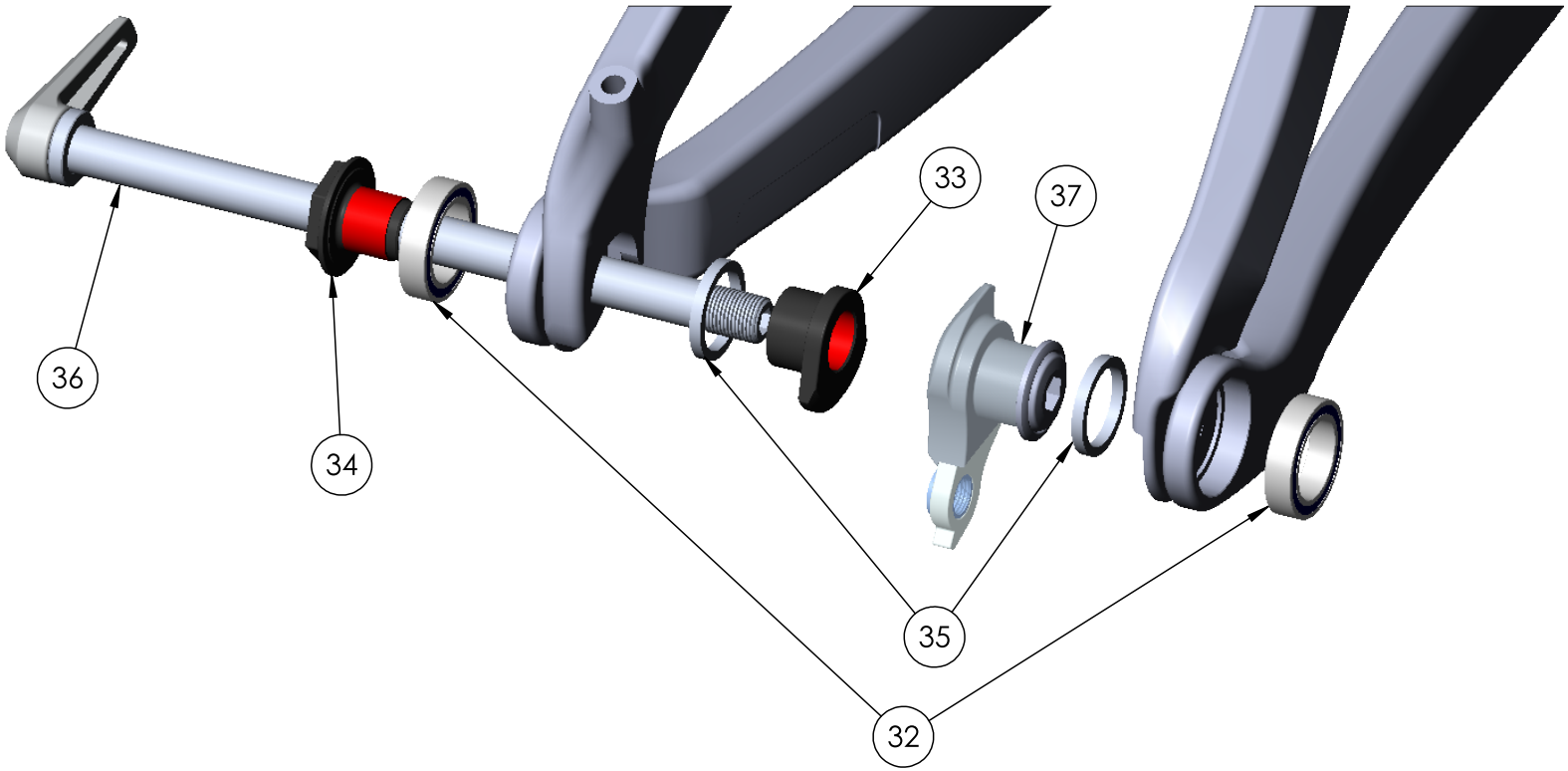

Product Support

MY20 Fuel EX Carbon Parts Quick Reference

Item	Description	Part Number	Qty	Note
7	M4x16mm Bolt	W532763	1	
38	Housing Exit Guide	W543605	1	
39	M3x12mm Bolt	W318529	1	Torque 0.7Nm
40	2x Housing Exit Guide	W583807	1	

