Product Support

2018 Emonda SLR, Disc Brake

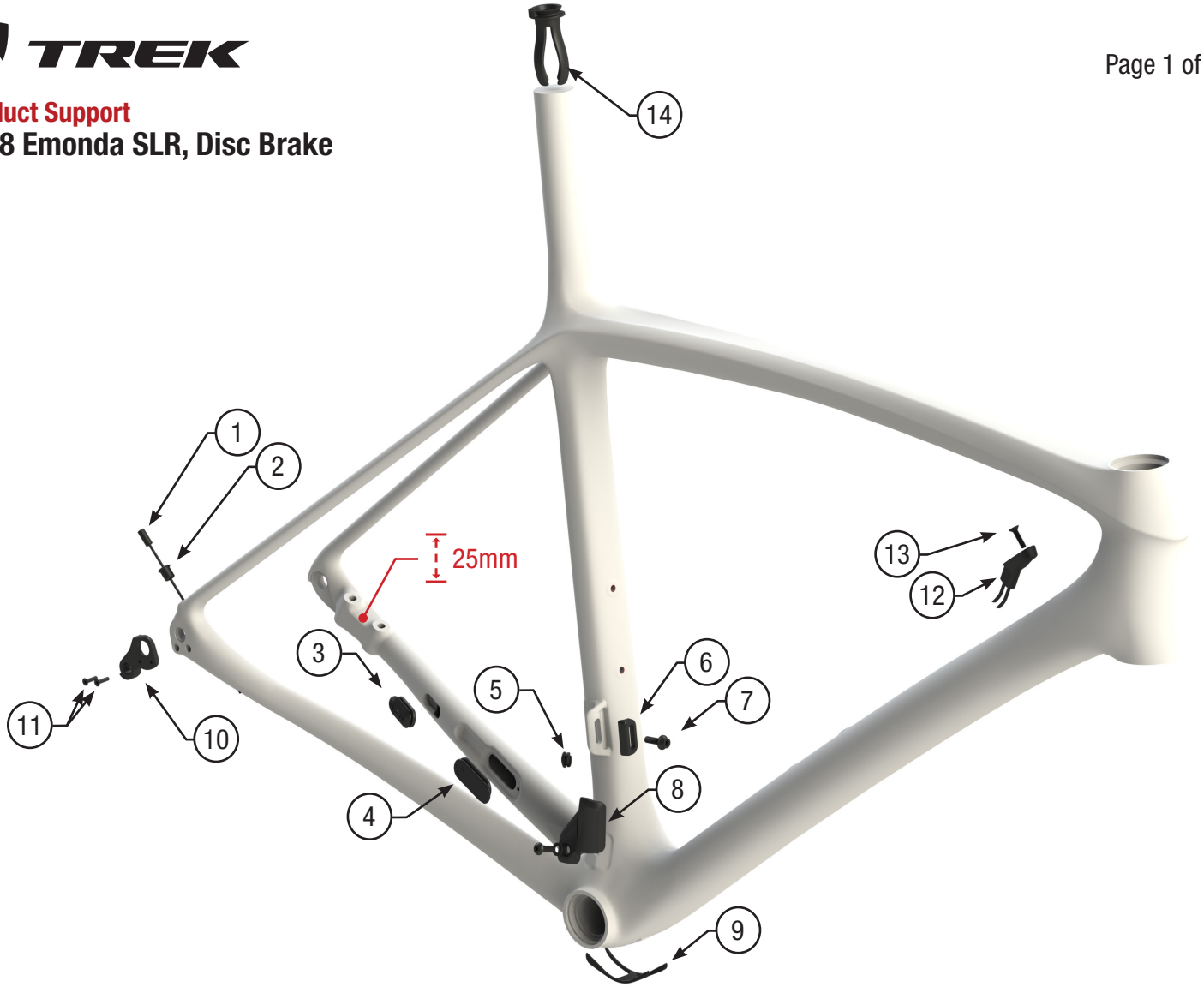

Number	TCG P/N	Mech.	Elec.	Description	Torque	Quantity
1	W517272	✓		Long-Nosed Ferrule		1
2	W320469	✓		Rear Derailleur Housing Stop		1
	W317292		✓	Rear Derailleur Wire Grommet		1
3	W330578	✓	✓	Internal Routing Housing Grommet		1
4	W521455	✓	✓	Duotrap S Blank Cover		1
5	W440699	✓		Seat Tube Hole Plug		1
	W440697		✓	Seat Tube Wire Guide		1
6	W531901	✓	✓	Carbon Front Derailleur Washer		1
7	W532088	✓	✓	Front Derailleur Mounting Bolt		1
8	559618	✓	✓	Emonda SLR Chainkeeper	5Nm	1
9	W438534	✓		Bottom Bracket Cable Guide		1
10	W524188	✓	✓	Derailleur Hanger (M12x1.75 Thru Axle)		1
11	W524884	✓	✓	Derailleur Hanger Bolts	0.7Nm	2
12	W541419	✓		Control Freak Mech. Internal Stop		1
	W519232		✓	Control Freak Elec. Internal Stop		1
13	W532763	✓	✓	Control Freak Mounting Bolt	2Nm	1
14	W326749		✓	Di2 Internal Battery Mount		1