TABLE OF CONTENTS

Introduction

1. Adjustable Rear IsoSpeed **3**
How it works 3
Installing the seatmast 4
Installing the adjustable seatmast slider and securing the seatmast 6
Adjusting the ride 7

2. Front IsoSpeed **8**
Installing the Front IsoSpeed system 8

3. Installing the fork **11**

4. Installing the Di2 **12**

5. Installing the shift cables **13**
Securing the rear derailleur 15
Securing the front derailleur 16

6. Installing fenders **17**
Securing the rear fender 17
Securing the front fender 19

7. Installing chain keeper **21**
Securing the chain keeper 21

Domane_Assembly_Manual_Body_Update_v8.indd 1 9/16/16 1:47 PM

A note from the development team

Our goal as bicycle developers is simple: we seek to improve the experience of riding. Getting there can be a bit more complicated.

Trek's IsoSpeed decoupler, for instance, originally developed for the first generation Domane, was the result of an extensive 18-month study of how a racing bike performs over rough roads.

Since its introduction, IsoSpeed has revolutionized race comfort technology, bringing a new standard of compliance and confidence in handling to road, cyclocross, and mountain bikes in Trek's lineup.

But Trek never stops developing. With the all-new Domane SLR, we set out to devise a solution for customizable compliance and greater efficiency and comfort at the front end.

In development, we went directly to the source—researching and designing Adjustable Rear IsoSpeed and Front IsoSpeed at the Arenberg Forest with Fabian Cancellara and Trek-Segafredo, then replicating a 100-meter section in our Waterloo Performance Factory for even more extensive testing.

Hundreds of people had a hand in making the new Domane a reality, from engineers to product developers to carbon techs on the Waterloo factory floor. It wouldn't be the bike it is today without each of their contributions. In the end, we knew we'd achieved something remarkable. We hope you enjoy the magic.

Sincerely,
The Domane SLR Development Team

Domane_Assembly_Manual_Body_Update_v8.indd 2 9/16/16 1:47 PM

1 ADJUSTABLE REAR ISOSPEED DECOUPLER AND SEATMAST

TOOLS AND MATERIALS REQUIRED

- 4mm Hex wrench
- 5mm Hex Wrench
- 6mm Hex Wrench
- Torque wrench
- Grease
- Loctite 242

K	Rear IsoSpeed cover, drive side	
L	Pivot bolt	
M	Bearing	19mm x 10mm x 5mm
N	Pivot locating washer	
O	Rear IsoSpeed cover, non-drive side	
P	Nut	m5 x .08 x 24mm
Q	Flat washer	m5 x 10 x 1.0mm
R	Button head screw	m5 x 10mm
S	Curved washer	m5 x 18od x 1.5thck x r11mm
T	Spring lock washer	
U	Cap screw	m5 x .08 - 35mm
BB	Adjustable seatmast bumper	
CC	IsoSpeed axle	
DD	Seatmast	
EE	Adjustable seatmast slider	

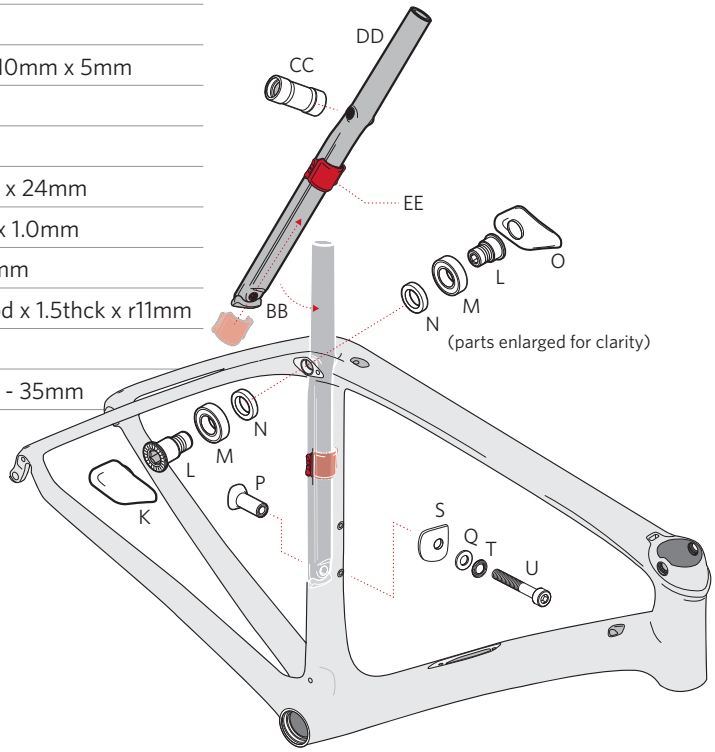

How it works

The Adjustable Rear IsoSpeed decoupler allows the seatmast to flex independently (decoupled) from the seat tube and top tube. The decoupler provides saddle comfort over rough pavement, while the frame maintains stiffness for quick acceleration and increased pedaling efficiency. The new adjustable seatmast slider changes the amount of flex provided by the decoupler for a truly tuned ride.

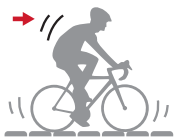

Higher position
As the adjustable seatmast slider is moved up the seatmast, you will feel the road surface and be more subject road vibration.



Lower position
The ride will be more comfortable as the adjustable seatmast slider is moved down the seatmast. You will be more isolated from any vibration caused by the road surface.

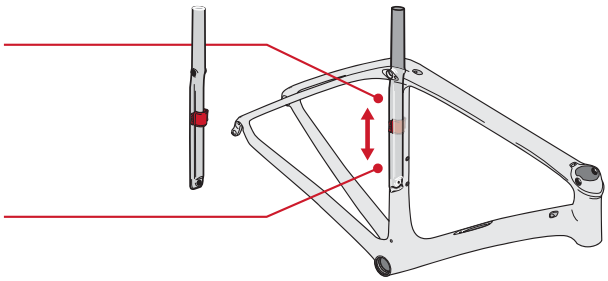

Domane_Assembly_Manual_Body_Update_v8.indd 3 9/16/16 1:47 PM

1 INSTALLING THE ADJUSTABLE REAR ISOSPEED DECOUPLER AND SEATMAST

Installing the seatmast

1. Apply grease to the bore holes of the seatmast and to the bore holes on the frame.

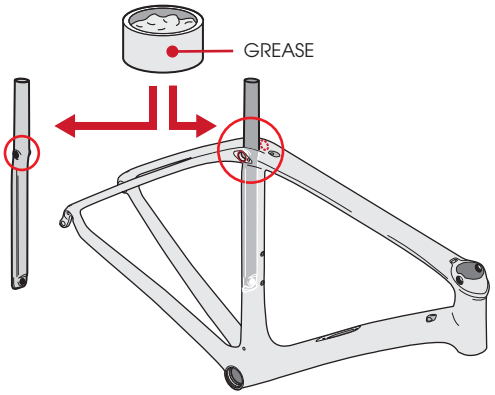

2. Insert the IsoSpeed axle into the seatmast as shown.

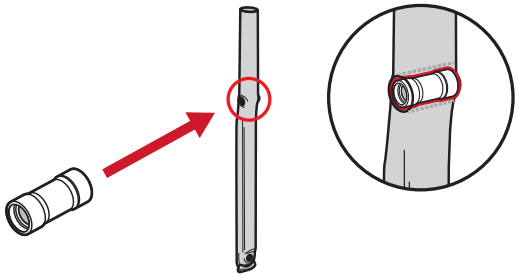

3. Place a bearing and then a pivot locating washer onto the pivot bolt. Repeat so you will have two bolt assemblies. If you are reusing a bolt, clean the threads and apply Loctite 242.

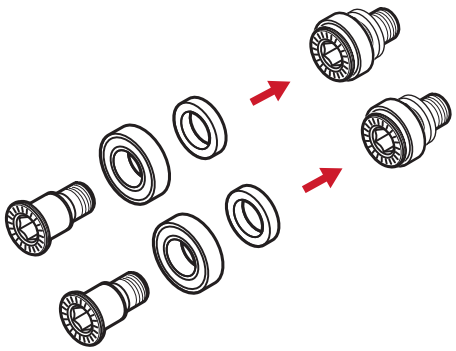

NOTE

The pivot locating washer gets installed between the IsoSpeed seatmast and the IsoSpeed bearing.

4. Align the bore holes in the seatmast with the opening in the frame.

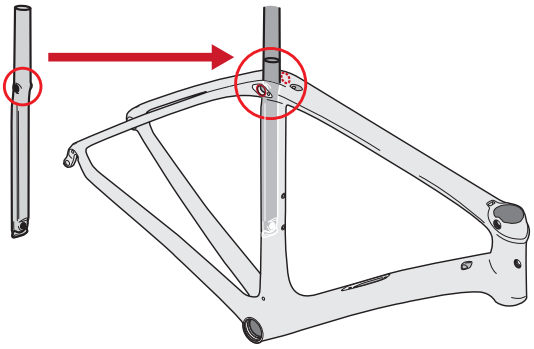

5. Pass a pivot bolt assembly from Step 3 through the bore hole and thread it into the IsoSpeed axle.

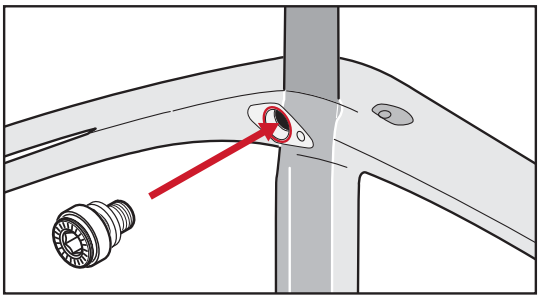

6. Insert a 6mm hex wrench into the non-drive side of the IsoSpeed axle to hold it steady (6a). Insert a 5mm hex wrench into the pivot bolt and turn it to engage the threads (6b). **Do not fully tighten.**

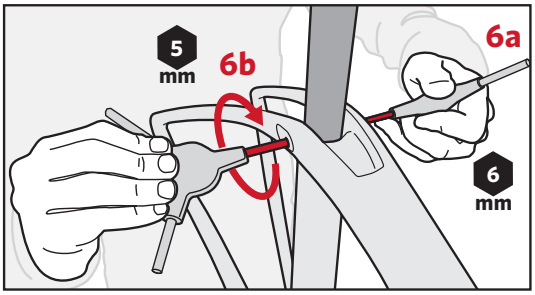

Domane_Assembly_Manual_Body_Update_v8.indd 4 9/16/16 1:47 PM

1 INSTALLING THE ADJUSTABLE REAR ISOSPEED DECOUPLER AND SEATMAST

7. On the non-drive side, insert the other pivot bolt assembly from step 3 through the bore hole and thread it into the IsoSpeed axle.

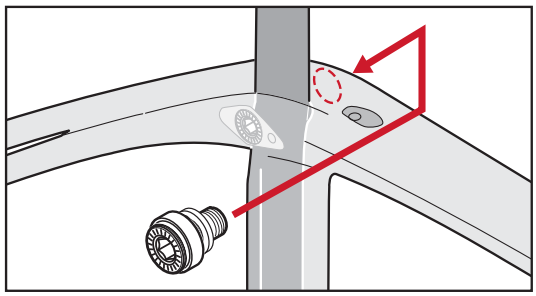

8. Insert 5mm hex wrenches into both pivot bolts and slowly turn each clockwise. Turn only until snug. **Do not over tighten.**

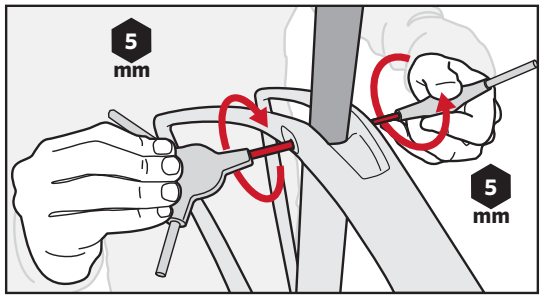

9. Hold the non-driveside pivot bolt with the hex wrench (8a). Using a torque wrench, tighten the driveside pivot bolt by turning it towards the front of the bike to 8Nm maximum (8b). Turn until the wrench "clicks" to ensure proper seating and tightness.

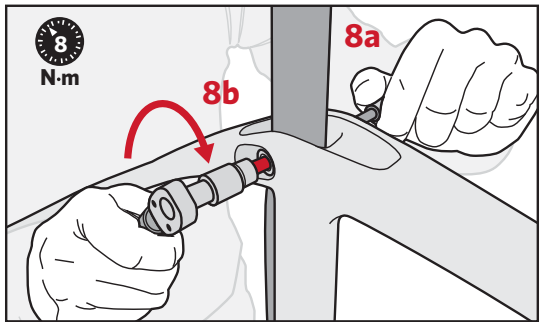

10. Repeat the tightening process with the torque wrench on the non-drive side.

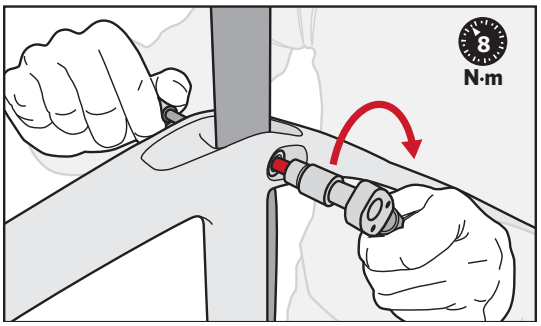

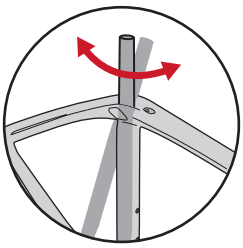

NOTE

A correctly installed seatmast moves freely. If it does not, reinstall and make sure all hardware is installed correctly.

11. Remove excess grease with a cloth. Align the Rear IsoSpeed cover, drive side, and snap into place. Repeat for Rear IsoSpeed cover, non-drive side.

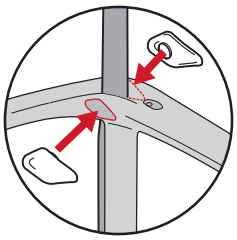

Domane_Assembly_Manual_Body_Update_v8.indd 5 9/16/16 1:47 PM

Installing the adjustable seatmast slider and securing the seatmast.

1. Rotate the seatmast away from the frame.

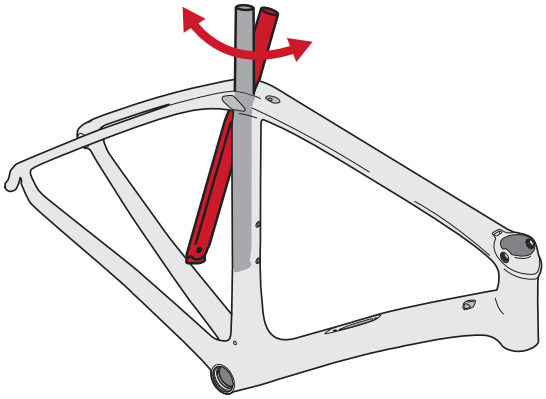

2. Install the adjustable seatmast slider by fitting it into the corresponding groove on the seatmast. Slide it up past the hole in the bottom of the seatmast. You will adjust its position later.

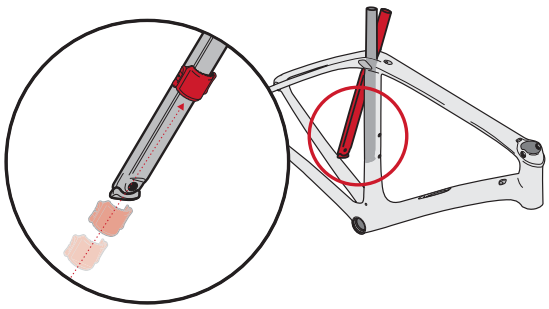

3. Rotate the seatmast so the adjustable seatmast slider contacts the seat tube.

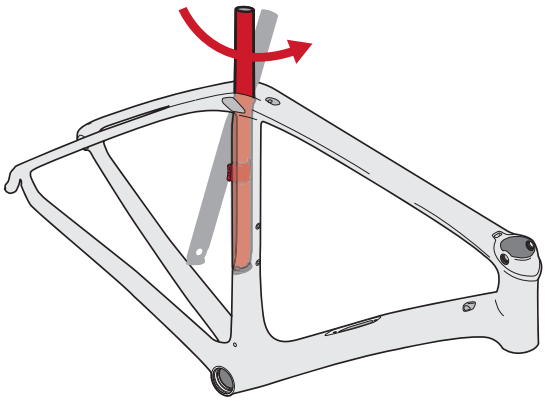

4. Insert the m5 nut into the hole on the seatmast, making sure the vertical alignment of the head of the nut matches the vertical alignment of the hole in the seatmast. If it is not aligned, there is a crush risk.

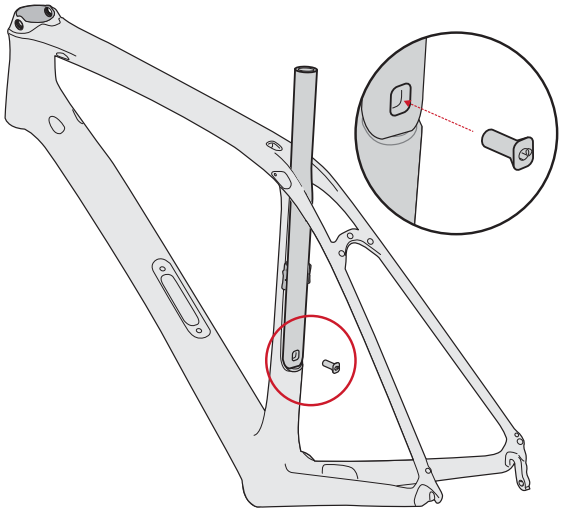

5. Place the spring lock washer, the flat washer, and the curved washer onto the cap screw. The dome of the spring lock washer is curved and fits against the head of the cap screw.

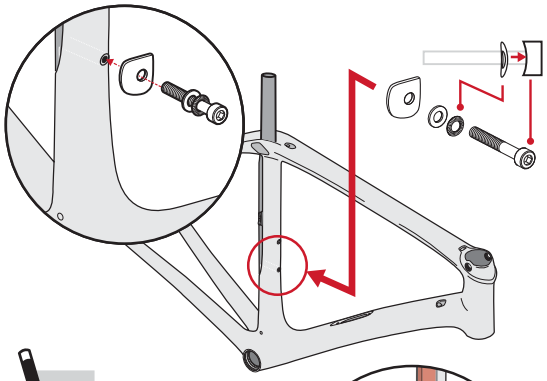

TIP

Squeeze the seatmast and seat tube together to hold in place during these steps.

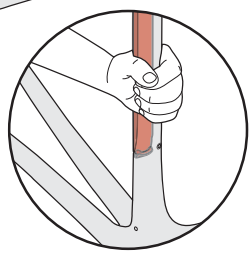

Domane_Assembly_Manual_Body_Update_v8.indd 6 9/16/16 1:47 PM

6. Place the curved washer onto the seat tube (6a) and while holding the nut securely with a finger (6b), insert the cap screw through the front of the seat tube.

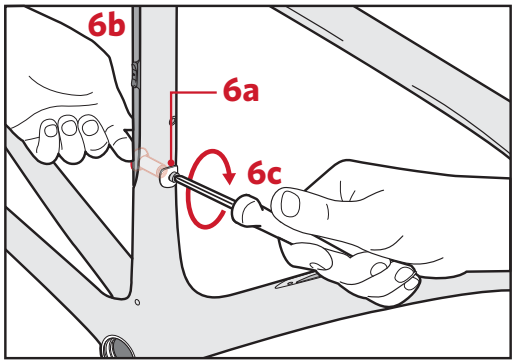



IMPORTANT

Over-tightening can cause damage.

7. Decide the location of the seatmast slider. The closer the slider is towards the saddle, the stiffer the ride. The closer the slider is towards the bottom bracket, the less stiff the ride as the seatmast increases its flexibility.

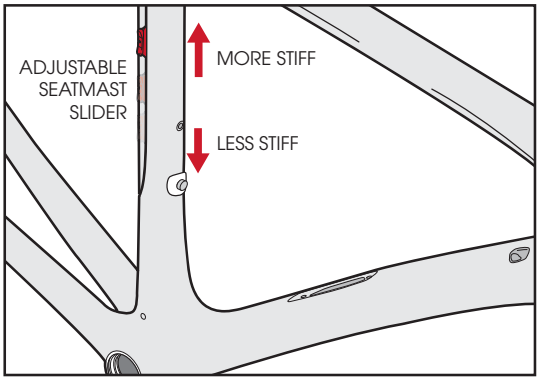

8. Once you have decided on the position of the adjustable seatmast slider, tighten the cap screw to a maximum of 3Nm using a torque key set. To change the position of the slider, loosen the cap screw and repeat steps 7 and 8.

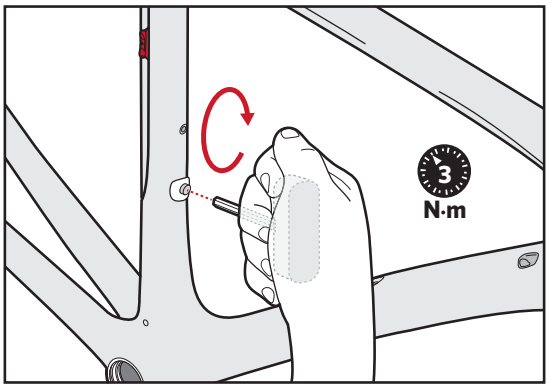

Adjusting the ride

1. To change the position of the adjustable seatmast slider, loosen the bolt and move the slider to the new position.

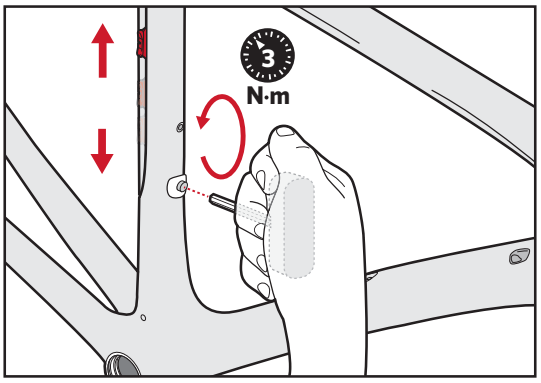

2. Tighten the cap screw to 3Nm using a torque key or wrench.

Domane_Assembly_Manual_Body_Update_v8.indd 7 9/16/16 1:47 PM

2 FRONT ISOSPEED

TOOLS AND MATERIALS REQUIRED

- 5mm hex wrench
- Torque wrench
- Grease

A	Front IsoSpeed lower cover	
B	Elliptical nut	m8 x1.0 x 6mm
C	Front IsoSpeed decoupler	
D	Washer	16od x 10.10id x 1.125 length
E	Screw	m8 x 1.0 x 14mm, 4mm hex
F	Pre-load spacer	
G	Headset bearing	
H	Headset compression ring	
I	Front IsoSpeed head tube cover	
J	IsoSpeed top cap	

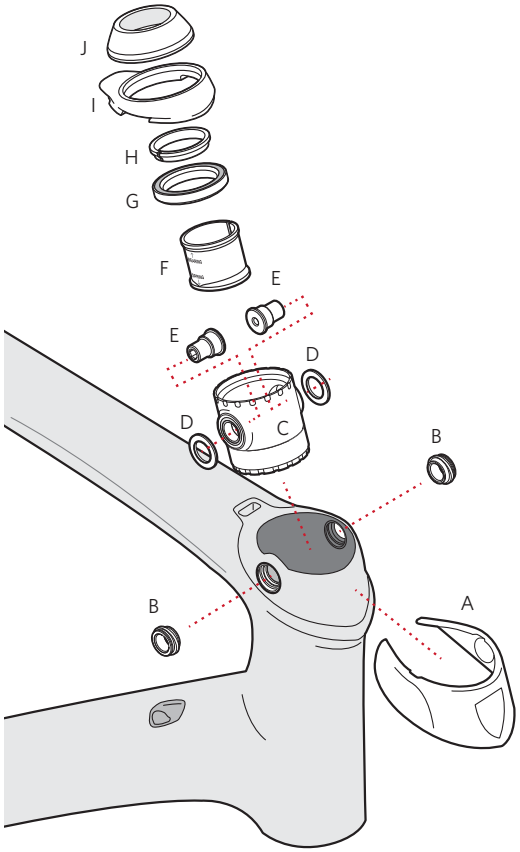

Installing the Front IsoSpeed system

1. Apply grease to the bore holes, as well as the inside face and both sides of the head tube.

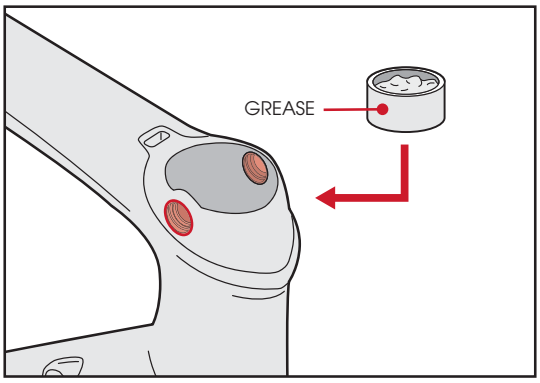

2. Place a washer over each bearing in the front IsoSpeed decoupler.

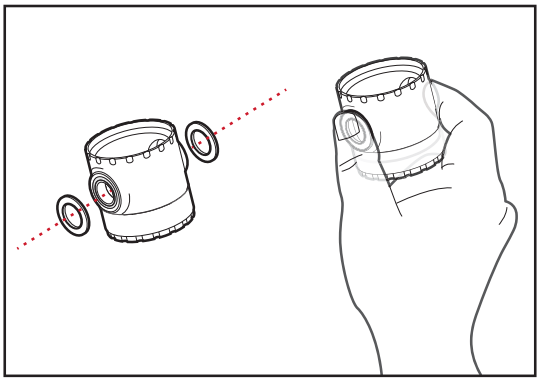

Domane_Assembly_Manual_Body_Update_v8.indd 8 9/16/16 1:47 PM

2 INSTALLING THE FRONT ISOSPEED DECOUPLER

3. Pinch the Front IsoSpeed decoupler between two fingers to hold the washers, and carefully guide it into the cavity in the head tube. Stop when the holes in the decoupler are aligned with the bore holes in the frame.

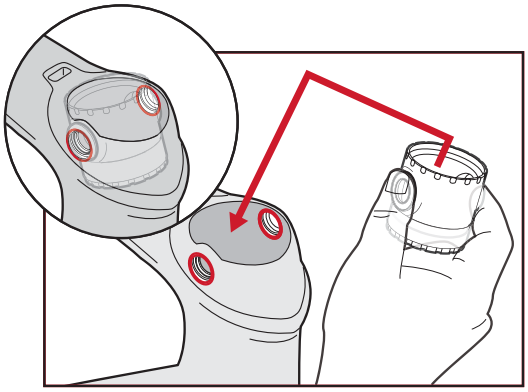

4. From inside the decoupler, insert a screw into the driveside bore hole so the screw points to the outside of the head tube.

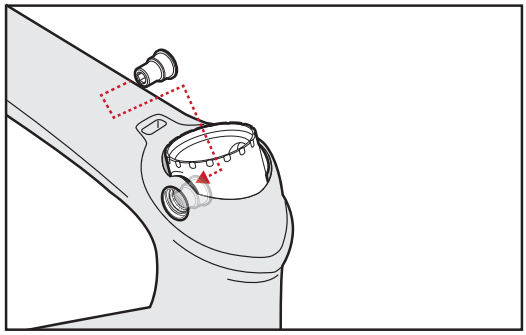

5. Point the end of the elliptical nut with the chamfer towards the bore hole.

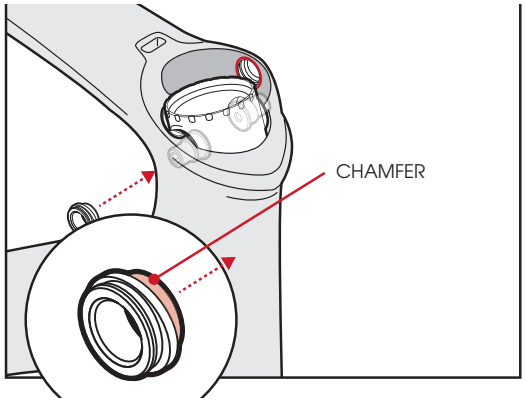

6. Place a finger inside the decoupler and push the screw towards the outside of the head tube.

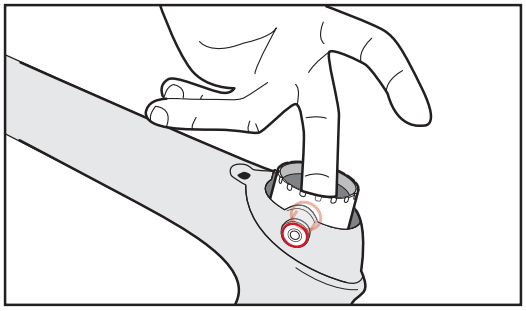

7. Hand thread the elliptical nut a few turns to the LEFT to secure it for the next step.

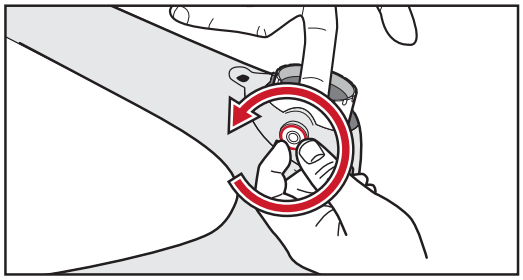



IMPORTANT

Over-tightening can cause damage.

8. The elliptical nut is an oval shape and matches the oval shape of the bore hole in the head tube. When the elliptical nut is hand tight, align the oval of the nut with the style line of the head tube.

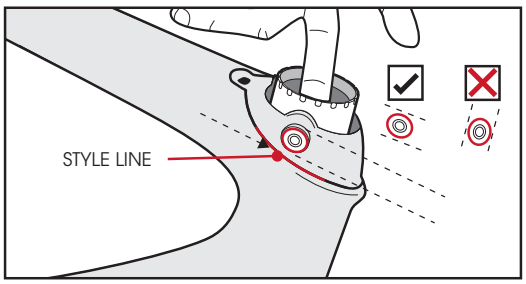

Domane_Assembly_Manual_Body_Update_v8.indd 9 9/16/16 1:47 PM

2 INSTALLING THE FRONT ISOSPEED DECOUPLER

9. Place one hand on the opposite side of the head tube (9a) and with the other, insert the torque key into the nut and apply pressure with both hands until the nut seats into the head tube (9b). Then turn clockwise, with firm pressure (9c). This will draw the screw inside the head tube towards the nut. **Turn until snug, do not fully tighten.**

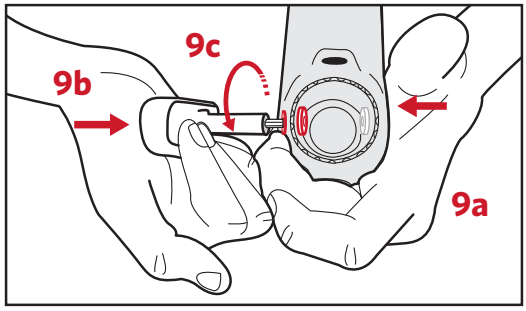

10. Repeat the installation of the screw and elliptical nut for the other side.

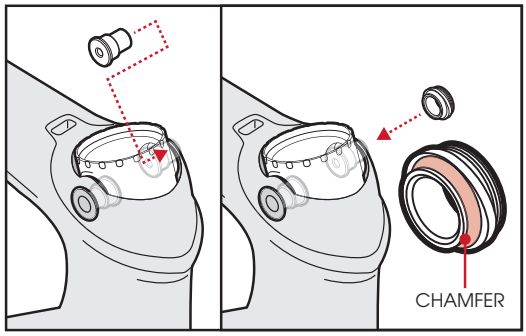

11. Repeat the seating process for the other side.

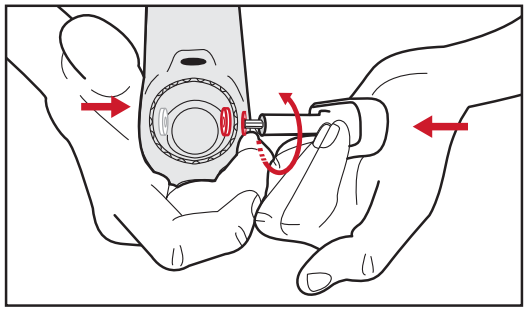

12. To fully tighten, apply good pressure while turning the torque key. This will prevent the bolt inside the decoupler from spinning and will draw it towards the nut. Tighten to a maximum of 5Nm.

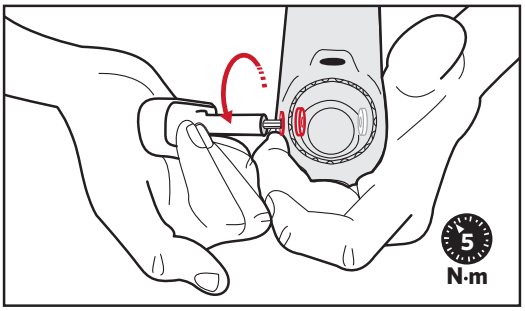

13. Repeat for the other side.

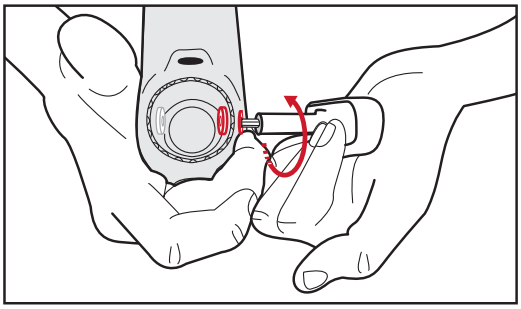

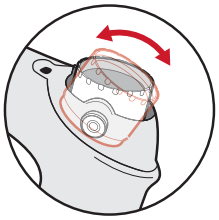

NOTE

The decoupler should move freely after installation. If it does not, loosen and reinstall, clean connections, and apply grease.

14. Lower the pre-load spacer into the decoupler so that the label "BEARING" is on the top and "SPRING" is pointed down. Also note there are flat sides; these line up with the screws on either side of the decoupler.

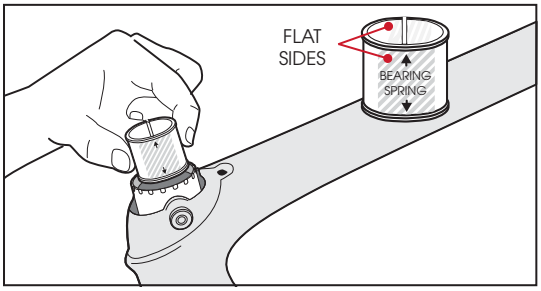

Domane_Assembly_Manual_Body_Update_v8.indd 10 9/16/16 1:47 PM

3 INSTALLING THE FORK

TOOLS AND MATERIALS REQUIRED

- Fork
- Compression ring
- Lower bearing
- Headset bearing
- Compression plug
- IsoSpeed top cap
- IsoSpeed head tube cover

1. Install the Front IsoSpeed head tube cover. Make sure the Front IsoSpeed decoupler is aligned with the cover.

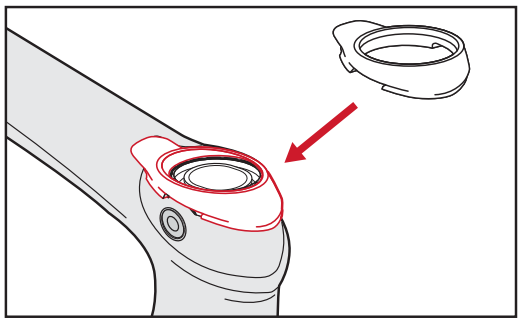

2. Place the lower bearing over the steer tube (2a) and pass the steer tube up through the head tube (2b). Slide the headset bearing and then the compression ring down onto the steer tube and into the top of the decoupler (2c).

3. Slide the IsoSpeed top cap over the steer tube.

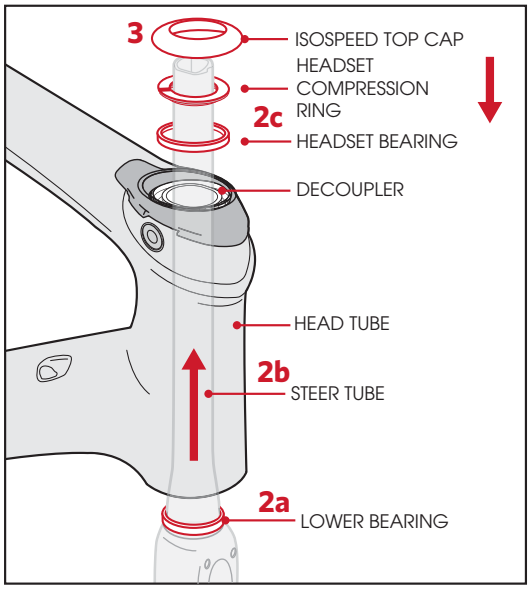

4. Install the Front IsoSpeed lower cover by wrapping it around the head tube, starting on the left side and using your thumb to press it into place.

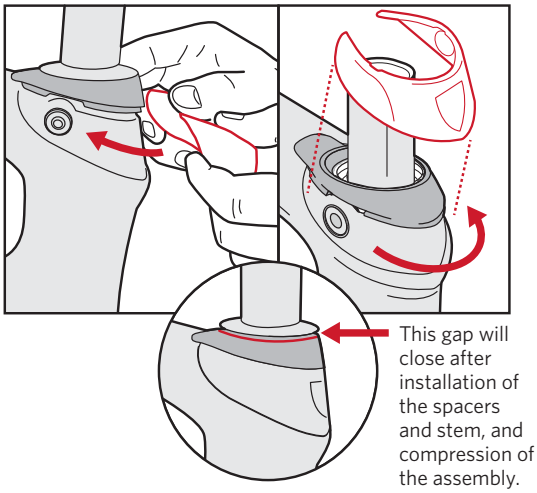

5. Confirm that the compression plug is properly installed in the steer tube and tightened to a torque of 10Nm (5a). Reinstall the spacers, stem, and headset top cap. Tighten the top cap screw to 4Nm (5b).

Finally, tighten the stem's steer tube clamp screws to the torque specified by the stem manufacturer.

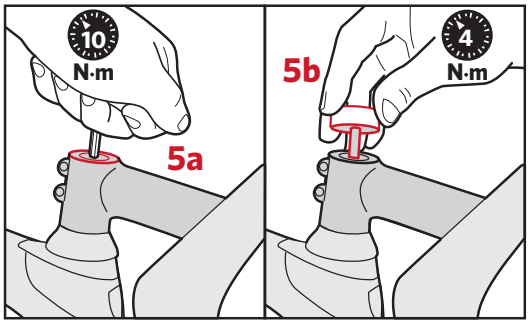

Domane_Assembly_Manual_Body_Update_v8.indd 11 9/16/16 1:47 PM

4 INSTALLING THE Di2

TOOLS AND MATERIALS REQUIRED

- Torx screws (5)
- T8 Torx wrench
- m5 bolts (2)
- Down tube cover

1. Place the Di2 battery into the bracket.

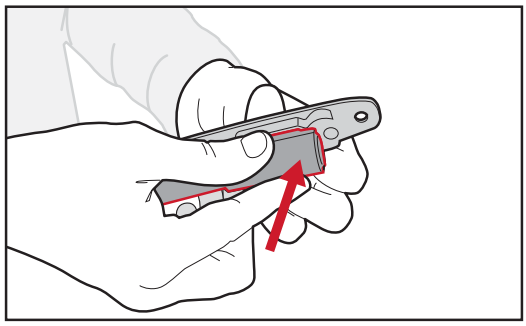

2. Install four Torx screws by using T8 Torx wrench. Tighten to just snug. Do not strip the plastic.

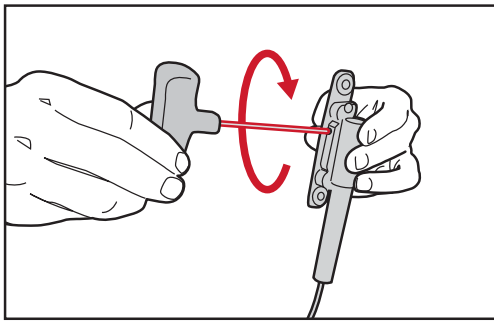

IMPORTANT

Over-tightening can cause damage.



3. Feed the connector into the down tube hole, then feed in the wire.

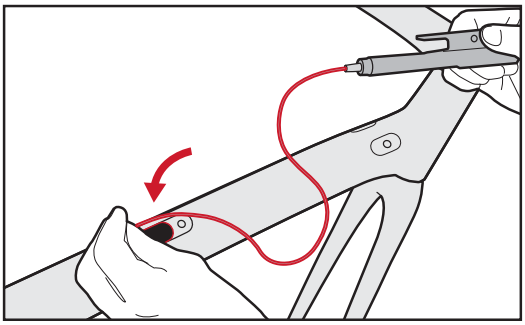

4. Place the down tube cover over the hole. Screw the two m5 flathead bolts and tighten to snug.

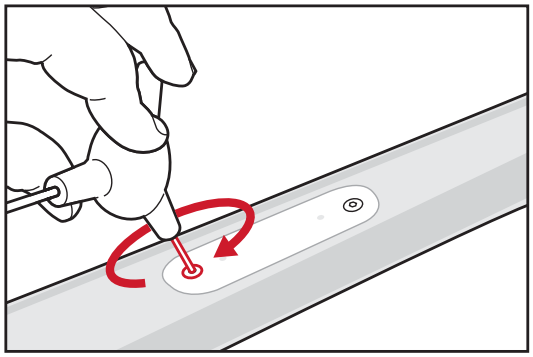

Domane_Assembly_Manual_Body_Update_v8.indd 12 9/16/16 1:47 PM

5 INSTALLING THE SHIFT CABLES

TOOLS AND MATERIALS REQUIRED

- Shift cables
- Housing
- Housing end caps
- Dropout cable sleeve
- Inline barrel adjuster
- Housing cutters
- 4mm wrench
- Cable cutters

1. Pull the hood of the non-driveside cover back to reveal the cable port. Open the gray access panel.

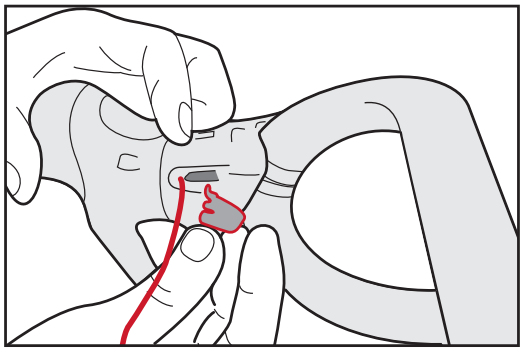

2. Pull the rear derailleur cable through the opening of the shifter bracket, and seat the cable head through the slot.

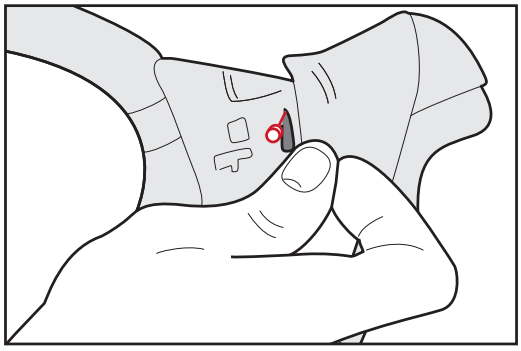

3. Install housing caps onto the cable housing. Insert the cable housing into the shifter housing stop.

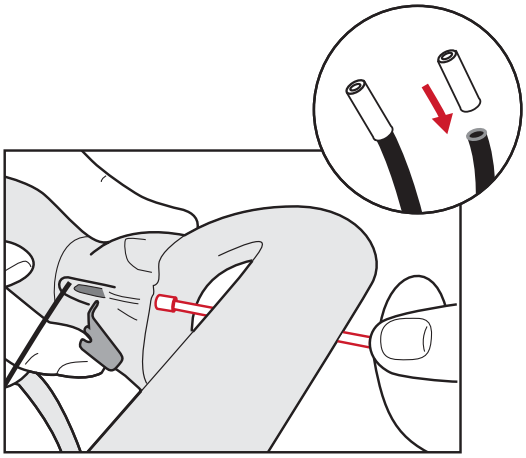

4. Guide the cable housing tightly along the handlebar, stopping a few inches short of the stem.

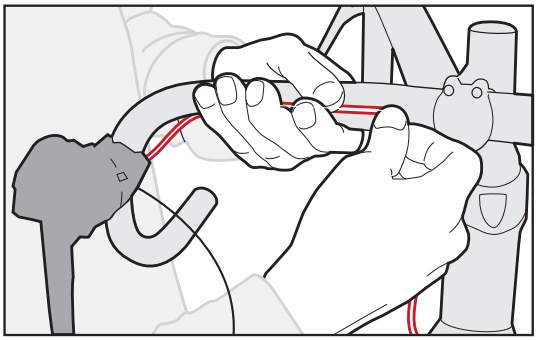

5. With the handlebar rotated all the way to the non-drive side, align the cable.



Domane_Assembly_Manual_Body_Update_v8.indd 13 9/16/16 1:47 PM

5 INSTALLING THE SHIFT CABLES

6. Create the correct amount of slack in the cable housing: do not make it too loose (A) or too tight (B).

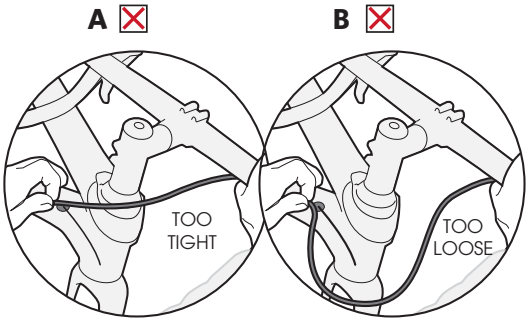

7. The cable housing should have enough slack to enable the handlebars to fully turn without pulling out of the down tube cable housing stop.

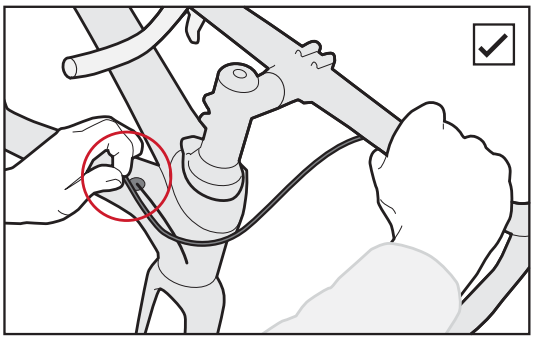

8. Mark the point at which the cable housing enters the down tube using your thumbnail or marker.

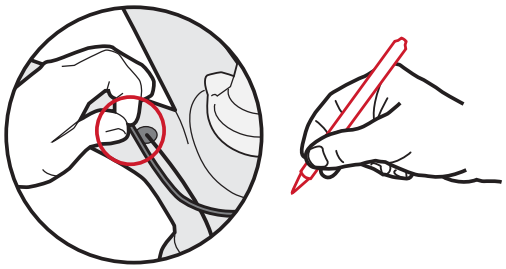

9. Cut the cable housing at this mark. Clean the cable housing end and install a cable stop.

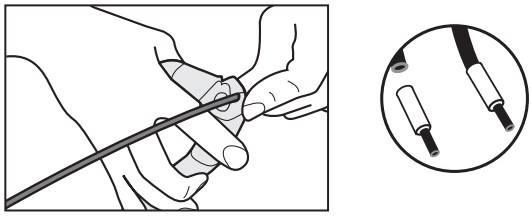

10. Thread a shift cable through the housing and follow shifter-specific instructions.

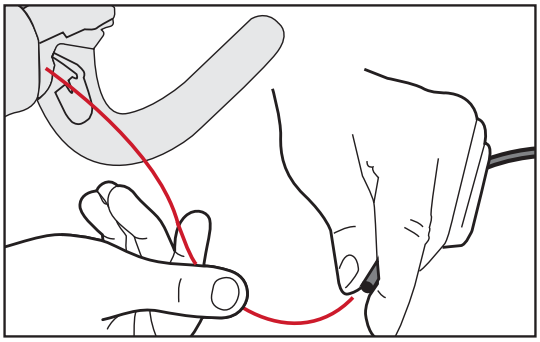

11. Repeat steps 1 - 10 to install the front derailleur cable. During this task, install a front derailleur inline barrel adjuster on the housing. Ensure that it does not make contact with the frame.

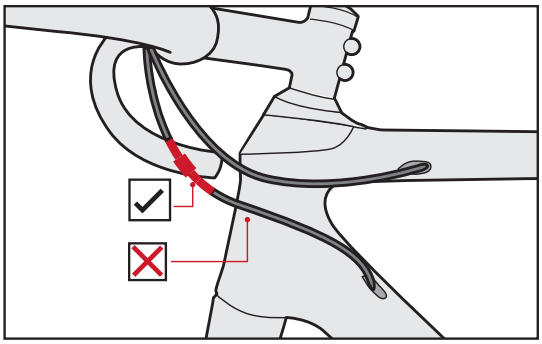

Domane_Assembly_Manual_Body_Update_v8.indd 14 9/16/16 1:47 PM

Securing the rear derailleur

1. Thread the cables through the liners in the down tube until they exit the bottom bracket cable port at the bottom of the bike.

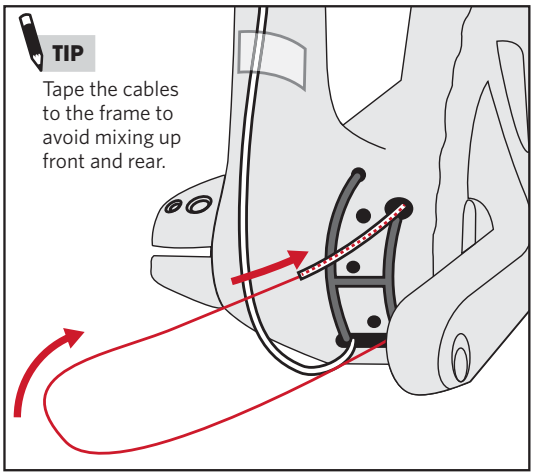

2. Install the cable guide by aligning the short end with the rear derailleur cable. Make sure the plastic tails of the guide line up with the grooves of the frame.

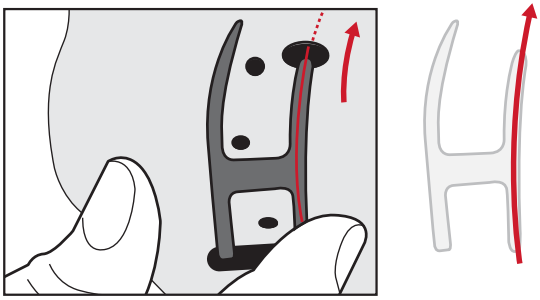

3. Install a housing end cap, and then thread the shift cable through the housing.

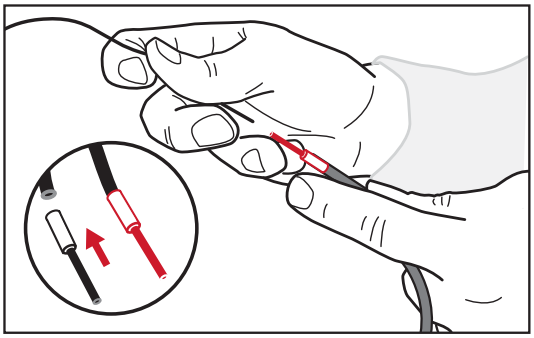

4. Snap the frame housing stop into the frame. Ensure the dropout cable sleeve is inserted in the frame.

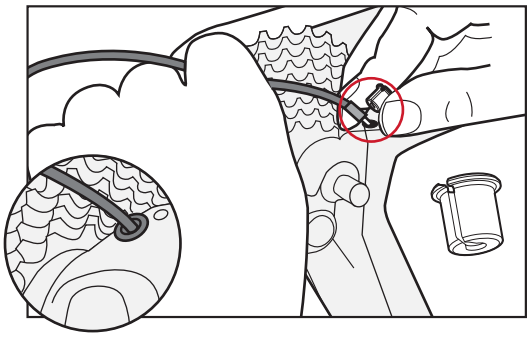

5. Clean the ends of the cable housing. Create a bend in the housing that allows the cable to slide without binding. See the illustration for guidance.

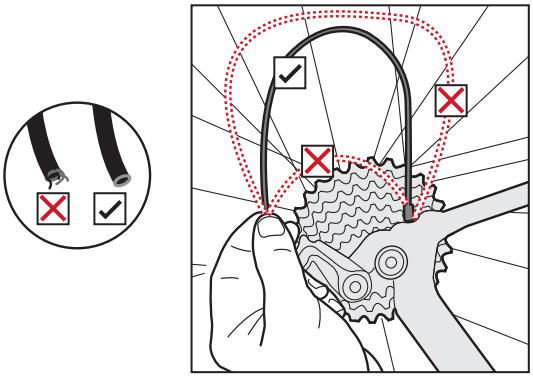

Domane_Assembly_Manual_Body_Update_v8.indd 15 9/16/16 1:48 PM

6. Thread the cable through the adjustment barrel and finish installation according to the derailleur manufacturer's specifications.

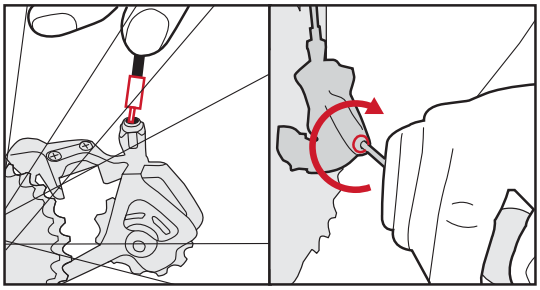

Securing the front derailleur

1. Check the down tube opening to make sure the cables are not interfering with each other. Pull on the front derailleur cable while viewing through the down tube opening. Only the front derailleur cable should move.

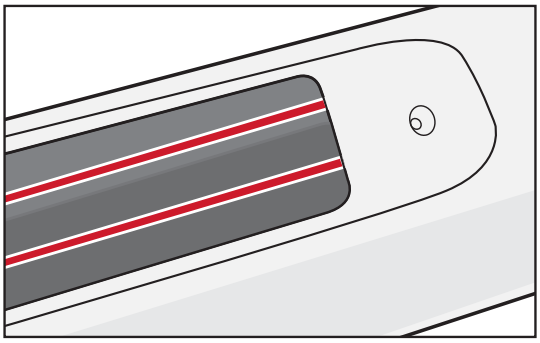

2. Guide the front derailleur cable over the long end of the bottom bracket cable guide. Make sure the bracket aligns with the grooves of the frame.

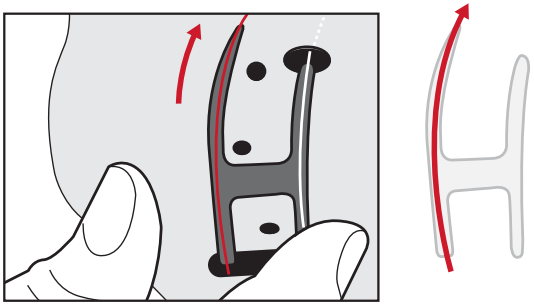

3. Install the cable to the front derailleur manufacturer's specifications.

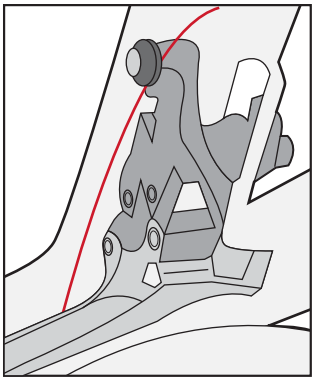

Domane_Assembly_Manual_Body_Update_v8.indd 16 9/16/16 1:48 PM

6 INSTALLING FENDERS

TOOLS AND MATERIALS REQUIRED

- 4mm hex wrench
- 3mm hex wrench
- 8mm open-end wrench
- Eye-bolt
- Hardware included with fender

Securing the rear fender

1. Remove the rear wheel. Remove the hidden fender mount set screws from the junction of the chainstay and seatstay (1a). Install the hidden fender mount eye-bolts with locking nuts until they bottom out (1b).

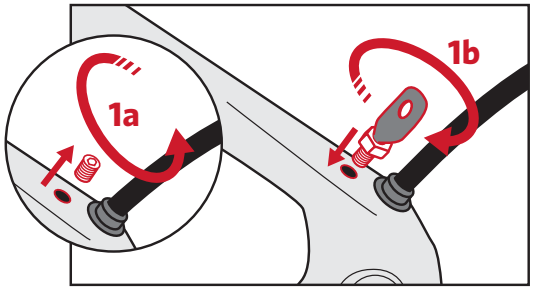

2. Orient the eye-bolt parallel to the frame. Lock the eye-bolt in place by tightening the nut with an 8mm open-end wrench.

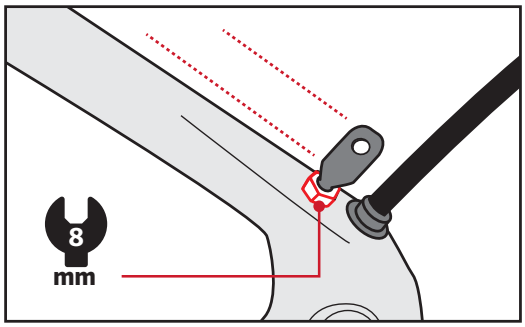

TIP

Disc brake equipped bikes require the use of a seatstay bridge adapter. If there are two adapters, Domane uses the larger one with the longer fasteners.

3. Pass the fender through the rear brake (1a) and slide the bracket onto the fender until you reach the brake arch or seatstay bridge adapter. (1b) Secure the bracket with a screw (1c). **Do not fully tighten.**

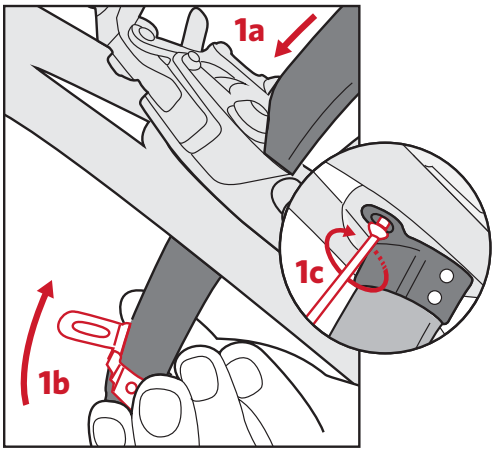

4. Install the lower mounting struts of the fenders to the eye-bolts. Tighten to a maximum of 5.2Nm.

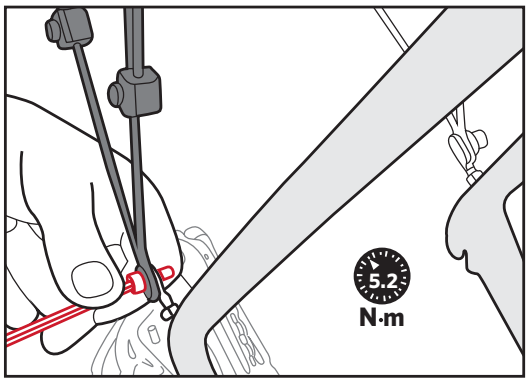

Domane_Assembly_Manual_Body_Update_v8.indd 17 9/16/16 1:48 PM

6 INSTALLING FENDERS

5. Install the front of the fender at the bottom of the seat tube with the included fastener.
Do not fully tighten.

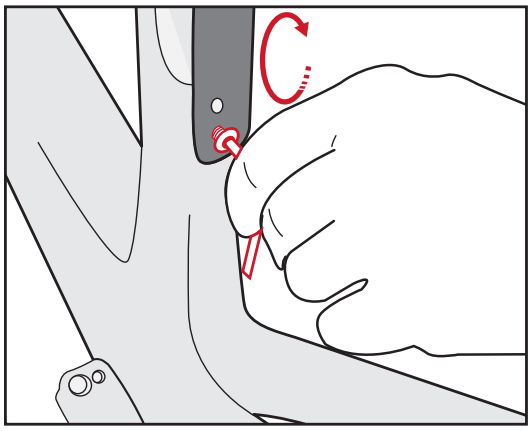

6. Attach the rear wheel. Adjust the struts to the appropriate length (6a) so that the fender is centered and has enough clearance over the tire to prevent rubbing (6b).

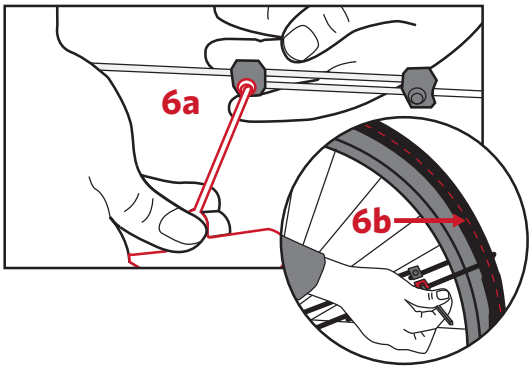

7. After finalizing the position of the fender, remove the rear wheel and tighten the brake arch or seatstay bridge adapter fastener to a maximum of 5.2Nm.

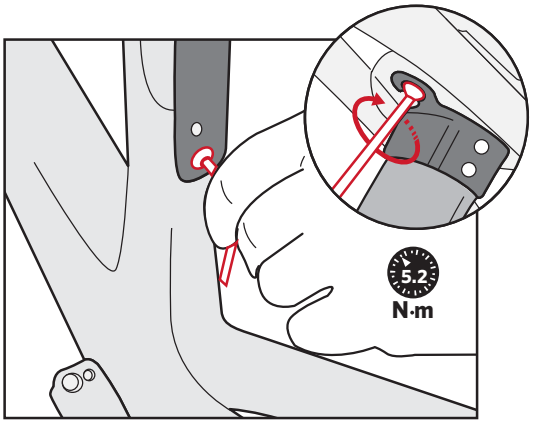

8. Tighten the struts to a maximum of 3Nm.

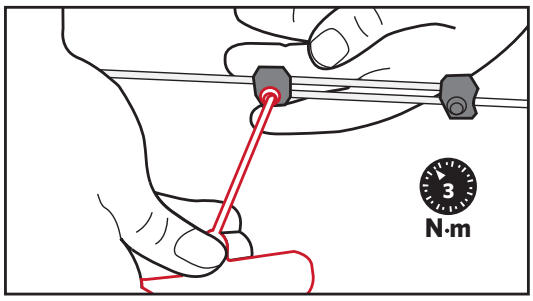

9. Finally, test the bike on the ground and loosen and tighten the wheel closure system. Then check for interference between the wheel and other parts of the bike.

Domane_Assembly_Manual_Body_Update_v8.indd 18 9/16/16 1:48 PM

Securing the front fender

1. Remove the front wheel. Remove the hidden fender mount set screws from the fork legs. (On a disc brake fork there will only be one set screw, on the driveside fork leg.)

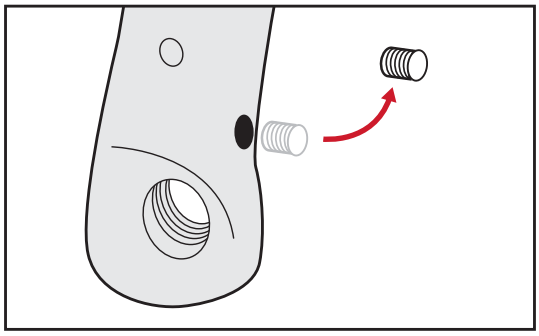

2. Install the hidden fender mount eye-bolts with locking nuts on both fork legs until they bottom out. Orient the eye-bolt so it is perpendicular to the ground. Use the 8mm open-end wrench to secure the locking nut.

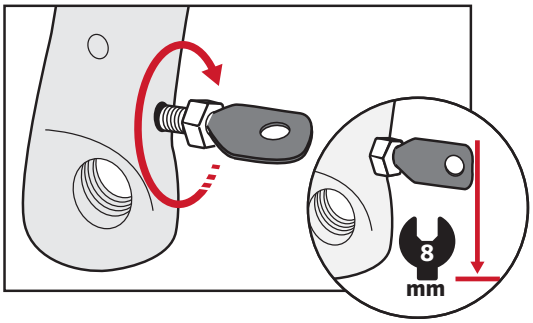

NOTE

Disc brake equipped bikes require the use of an angled bracket adapter that mounts between the caliper bolt head and the disc brake caliper. Position the eye-bolt so that it is perpendicular to the ground.

3. Install the top of the fender to the back side of the fork crown. Place the fender at its highest possible setting. This will be adjusted later when centering the wheel.

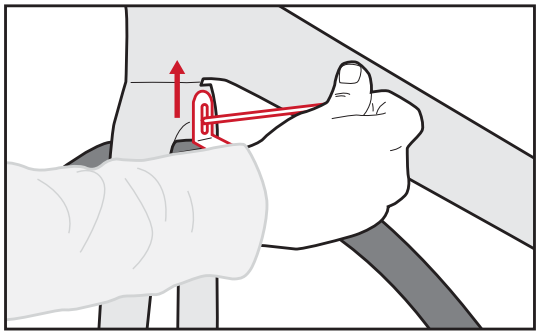

4. Install the lower mounting brackets of the fenders to the eye-bolts on the fork legs. Torque the eye-bolt hardware to a maximum of 5.2Nm.

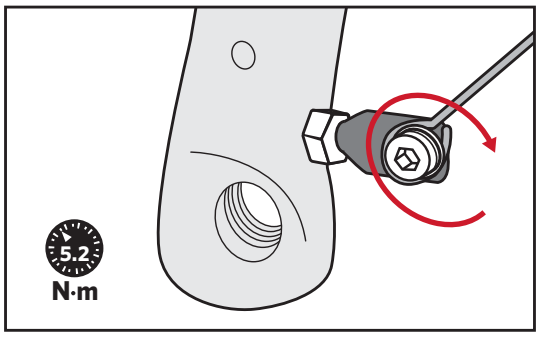

Domane_Assembly_Manual_Body_Update_v8.indd 19 9/16/16 1:48 PM

5. Reinstall the front wheel. Adjust the fender at the fork crown so that the fender is centered and there is clearance between the fender and the tire (5a).

Adjust the strut hardware so the back of the fender is centered over the tire and the fender does not rub (5b).

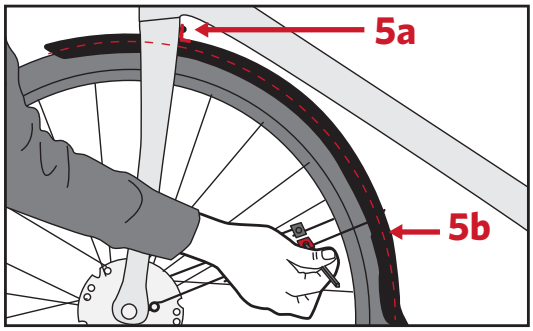

6. Once the fender is adjusted, tighten the fork crown screw to a maximum of 5.2Nm (6a) and the strut screw to a maximum of 3Nm (6b).

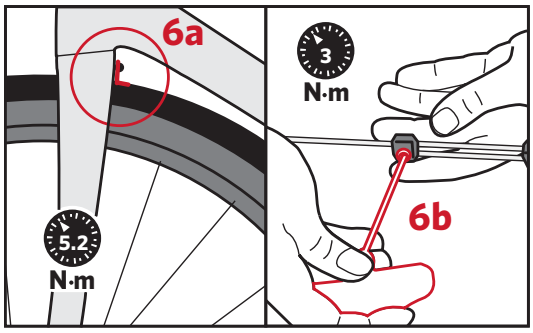

7. Test the bike on the ground and loosen and tighten the wheel closure system. Then check for interference between the wheel and other parts of the bike. Check for toe overlap, especially on smaller frame sizes.

Domane_Assembly_Manual_Body_Update_v8.indd 20 9/16/16 1:48 PM

7 INSTALLING THE CHAIN KEEPER

TOOLS AND MATERIALS REQUIRED

- Chain keeper
- Chain keeper washer
- 4mm hex wrench
- m5 button head screw
- Wrench

Securing the chain keeper

1. Place the chain keeper washer and chain keeper onto the m5 button head screw.

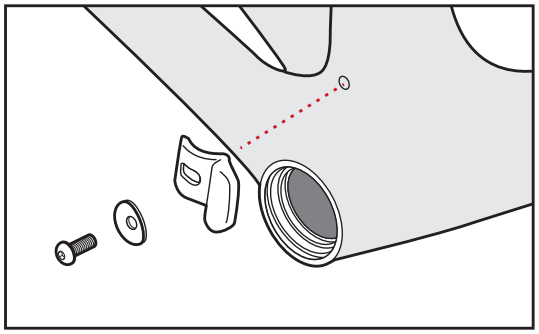

2. Note the curved surface on the frame and place the chain keeper along this surface and tighten until snug (2a). Tilt the chain keeper away from the bike until you install the chain. When the chain is installed, make final adjustments (2b).

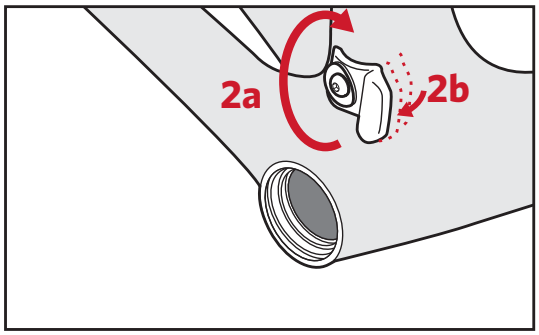

Domane_Assembly_Manual_Body_Update_v8.indd 21 9/16/16 1:48 PM

SERVICE NOTES

date	miles/km	