Service Information

Speed Concept 2011

The Trek Speed Concept bike is the fastest frameset we have ever made. To accomplish this, we have used shaped tubes, hidden front and rear brakes, and very thin-walled carbon tubes. Because of these unique features, the Speed Concept bike requires different or additional assembly and adjustment techniques. Some of the tasks may have been done by the factory. We include the instructions for these steps here for later reference when you need to perform service on this bike.

We have also provided general maintenance information:

- Carbon fiber care
- Headset bearing installation
- Bottom bracket bearing installation for a variety of bottom bracket types

Note: Instructions for Shimano's electronic Di2 are in a separate document. See your dealer.

These instructions are written for an experienced mechanic. If you need further information, refer to your bicycle owner's manual, the instructions in a bicycle mechanic's handbook, or consult your dealer.

Please save these instructions for future reference. Also check www.trekbikes.com for updates.

Note about performing mechanical work on bicycles:

Many people think of bicycles as simple machines, almost toys. However, modern bicycles use high-tech materials and designs that rely on correct maintenance and precision workmanship. If any part on the bicycle is worn, corroded, rusted, loose, or damaged in any other way, replace the part. If you do not have the correct tools or experience, do not perform the tasks in this manual; take your bicycle to your dealer for service.

In some cases we provide several methods of checking the tightness or connection of parts. The most preferable of these is always the one with the most precision. In other words, correct mechanical work requires that all bolts be tightened with a torque wrench.

Incorrect mechanical work on your bicycle could lead to damage or premature breakage of a part, which could cause you to fall and lead to serious injury or death.

Table of Contents

Working with Carbon Fiber Parts 1

Custom Components of the Speed Concept 2

Sizing the Bike 3

Seatpost

To install the seatpost 4

To adjust the height of the saddle 4

To reverse the seatpost head 4

Using a Repair Stand

To attach the workstand clamp adapter 5

Headset Bearings and Fork

To remove the fork and bearings 6

To install the bearings and fork 6

Cable Housings

To install the housing 7

To install the rubber top tube grommet 7

Aerobar Assembly

To install the extensions and armrests 8

To install the shifters 9

To install the brake levers 9

Aerobar Installation

To install the completed aerobar assembly 10

Derailleur Cables

To connect the front derailleur cable 11

To connect the rear derailleur cable 11

Front Brake

To install and adjust the front brake 12

Rear Brake

To install and adjust the rear brake 14

DuoTrap Computer Sensor

To install a Duotrap sensor 16

Draft Storage Box

To install a storage box 17

Crankset

Pressing bearings 19

SRAM GXP 20

Shimano HollowTech 23

Campagnolo UltraTorque 27

Inspecting the bottom bracket 29

FSA MegaExo AL 30

Crankset Troubleshooting 33

Working with Carbon Fiber Parts

Carbon fiber parts are different from metal parts, so they require different treatment.

Avoid sharp edges or excessive pressure

Carbon fiber composite can be damaged by sharp edges or clamping mechanisms which cause a point load, or a high pressure area. Before installing any carbon fiber part, or attaching any component to an existing carbon fiber part, follow these procedures to make sure the parts or components are carbon-compatible.

As carbon frames have gotten lighter and lighter, you can now feel movement in the tubes when you squeeze them. This is normal and no reflection of the strength of the frame. However, repeated compression of the sides of the tubes is not good for them, and could eventually lead to frame damage. Do not squeeze the frame tubing with your fingers, and especially never clamp the tubing in any mechanical device, including car racks.

Clean carbon parts before installation

With some interfaces of metal parts, grease is used on the clamping surfaces to prevent corrosion. When making adjustments, always grease the threads and shoulders of bolts. Grease reduces corrosion and allows you to achieve the correct tightness without damaging tools.

However, with most carbon parts you should avoid grease. If grease is applied to a carbon part that is clamped, the part may slip in the clamp, even at the recommended torque specification. When assembling parts that clamp a carbon surface, we recommend applying one of the following special carbon prep products:

· Tacx carbon assembly compound

· Fiber Grip™ carbon fiber assembly gel from Finish Line

On the other hand, the bearing seats of the Speed Concept frameset do require grease, as explained in these instructions.

Never modify the fork, frame, or components

The parts of the Speed Concept frameset have been carefully designed to meet the strength and function requirements of safe riding. Modifying these parts in any way may make the bike unsafe. As an example, removing the redundant wheel retention tabs on fork tips could make the fork less functional.

Suspension forks can add stress to a bike frame. Never add a suspension fork to a road bike, or change style and/or length of forks. If you are unsure if a fork is compatible with a frame, call Trek customer service. Any modification of a frame, fork, or components means that the bike no longer meets our specifications and will therefore void the bike's warranty.

Custom Components of the Speed Concept

The Speed Concept design incorporates a number of special parts with special features. This section gives a brief explanation of some of the features, their use and maintenance, and general information about the bike.

Compatibility of parts

Trek only recommends Bontrager parts for the Speed Concept bike because with these parts the torque specifications and, crush strength have been evaluated by our engineering staff. Other parts might not meet our requirements and could lead to damage.

Carbon fiber construction

Carbon fiber composite is by weight the lightest, strongest frame material available today. Please read about special care needed for carbon fiber in your the Trek bicycle owner's manual.

Two fork designs: integrated and traditional direct-connect

The leading fork design provides the least wind drag of any bicycle we have ever designed. With the carefully intergrated headtube / fork interface and hidden headset bearings, the air flows smoothly across the frame. However, this design limits the rotation of the fork; if you turn the aerobar too far the fork will contact the frame, possibly damaging the paint.

The traditional fork design is more economical with only a slight penalty in wind drag.

Internal cable routing

To minimize wind drag, the cables and housiing of the Speed Concept are hidden to the maximum extent possible.

Seatpost for either time trial or triathlon

The cap of the seatpost can be removed and rotated 180 degrees to gain different positions. In addition, there are different legnths of seatposts availabe.

Hidden brakes

Brakes will require re-adjustment if the wheels are changed because the brakes are sensitive to rim width. There are no barrel adjusters.

Carbon rims

Make sure you use brake pads that are compatible with the rim material.

Preparing and tightening fasteners

For each threaded fastener, apply a light coat of grease to the threads and shoulder of the bolt or screw.

The correct torque is noted on or near every threaded fastener on the Speed Concept bike. Because the specs are on the bike, we do not list them in this manual.

The specification on the bike tells you the maximum torque. Do not exceed it. However, you should also try to tighten a bolt to close to the listed value; do not leave bolts loose. Either condition, too loose or too tight, can cause a bolt or clamp to break.

When multiple fasteners attach a part, gradually tighten alternating bolts in small increments; do not completely tighten one and then the other. As the bolts become snug, check alignment of the parts and use a torque wrench for final tightening. When the tightening is completed, all bolts of a given clamp must be tightened to the same torque.

For more information

Trek dealers have access to the Trek Customer Service department for information about the Speed Concept bikes and parts, and can order any and all parts for the bikes through standard channels. You can find updates to this manual at this web address: www.trekbikes.com/us/en/support/manuals

Sizing the Bike

Before assembling the bike, make sure the frame is the correct size for the customer and as much as possible, that you have chosen the correct stem and spacer stack. There is information on our website that explains how to do this. Visit or website: www.trekbikes.com/us/en/support/manuals

Seatpost

The Speed Concept seatpost has an aerodynamic shape (Figure 1), so cannot be turned or reversed in the frame. However, the head of the seatpost is reversible to allow for a wide variety of seating positions.

The seatpost can be inserted dry or with carbon prep on the part that is inside the frame.

If the seatpost does not provide enough adjustment, an optional head for the seatpost is available with a different setback (see Table 1, below).

Tools and materials required

- 5 mm allen wrench
- Park Polylube 1000 grease

To install the seatpost

1. Select a seatpost from Table 1, below.

Table 1. Seatpost lengths and setbacks

Seatpost Setback (mm)	Length (mm)	PN
+/- 10	275	421511
	335	421512
	Head only	419629
+/- 35	275	419097
	335	419096
	Head only	419630

2. Grease the threads of the wedge bolt (Figure 2).
3. Re-install the bolt.
4. Wipe excess grease from the clamp.
5. Insert the seatpost and tighten the wedge bolt.

To reverse the seatpost head

1. Loosen and remove the two head bolts (Figure 3).
2. Remove the head, turn it around, and re-insert it into the seatpost.
3. Grease the threads, insert the bolts, and tighten.

To adjust the height of the saddle

1. Loosen the wedge bolt.
2. Slide the post up or down as necessary.
3. Make sure the minimum insertion mark is inside the frame.
4. Tighten the wedge bolt.



Figure 1. Speed Concept seatpost

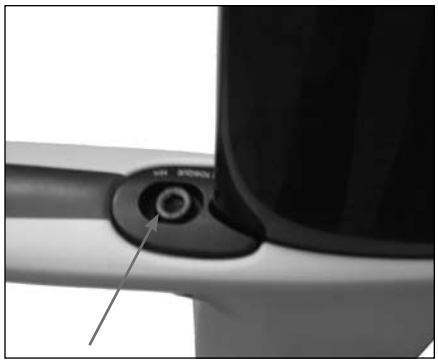

Figure 2. Wedge bolt that secures the seatpost



Figure 3. Bolts holding head on seatpost

Using a Repair Stand

Use special care when putting the new Speed Concept frame in a workstand. The only accepted or recommended method is to use the special workstand clamp adapter designed specifically for this frameset (Figure 1). The adapter clamps only to the seatpost, which must be installed first.

Tools and materials required

- Workstand
- Workstand clamp adapter, PN 403494 (includes pads PN 416102)

To attach the workstand clamp adapter

1. Open the workstand clamp adapter (Figure 1).
2. Wrap the adapter around the seatpost.
   If needed, extend the seatpost to provide room for the adapter.
3. Insert the base of the seatpost clamp in the workstand.



Figure 1. Seatpost clamp.

Headset Bearings and Fork

This section explains how to install the integrated fork on the Speed Concept bike, including removing and installing the headset bearings.

If the fork is already in the bike, you can go to the next section, installing the housings.

Although you can replace the fork without disconnecting the derailleur cables and rear brake cable, this procedure may be easier with the cables disconnected. These instructions explain the steps without removing these cables.

To remove the fork and bearings

1. Disconnect the front brake cable.
2. Loosen and remove the four aerobar attachment screws (Figure 1), and remove the aerobar.
3. Loosen the pinch bolt that clamps the steering axle nut (Figure 1).
4. Loosen and remove the three stem attachment bolts (Figure 2), and remove the stem.
5. While you support the fork, loosen and remove the steering axle nut (Figure 2).
6. Apply light pressure to the fork to slide the steering axle out of the bearings.
   The bearings should drop out.

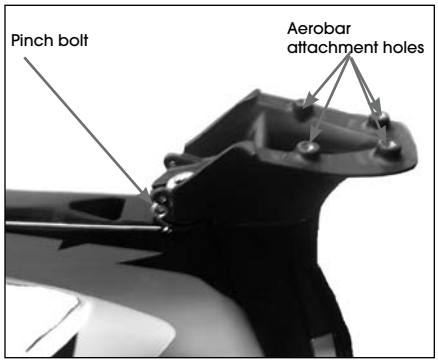

Figure 1. Location on stem of aerobar attachment bolts

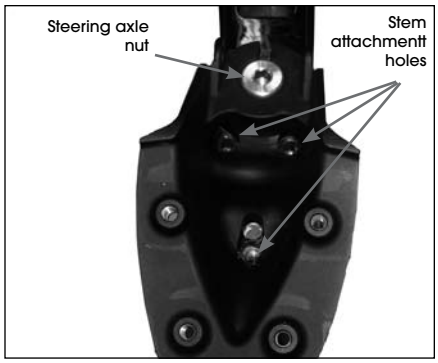

Figure 2. Location on stem of stem attachment bolts

To install the bearings and fork

1. Apply a light coat of grease to the bearing contact surfaces.
2. With your hands, align the upper bearing and press it into the frame.
3. Apply a light coat of grease to the steering axle and slide the lower bearing onto the axle.
4. Slide the steering axle through the headtube from the bottom and through the upper bearing.
   Be careful not to bump the fork against the frame during insertion.
5. Attach the steering axle nut and tighten to 2.5Nm.
6. Reattach the stem, and then the aerobar, following the normal procedures.
7. Reconnect the front brake and adjust.

Cable Housings

If the housings are already in place, go to the next section. If you are assembling a new bike, don't be confused by the backwards cables in the housing; those cables are just there to hold the housing in place during shipping.

If you are replacing cables or housing, you must remove the stem and aerobar before proceeding.

Tools and materials required

- Derailleur cable and 4 mm housing
- Brake cable and 5 mm housing
- Housing cutters
- Cable liner
- Tape

To install the housing

Note: Only 4mm housing will fit into the derailleur housing stops.

1. Detach the bottom bracket cable guide.
2. Slide a piece of 4mm shift housing through the top tube housing window (Figure 1), down the down tube, and into the non-drive shift housing stop in the bottom bracket cable guide.
   To determine the length of housing, use the previous piece as a guide, or install a new 1500mm piece that you will resize later.
3. Leave the housing long (do not cut it). Where the upper end of the housing exits the top tube, mark it with a piece of tape. This is to differentiate it from the rear housing.
4. Slide a piece of 4mm shift housing through the top tube housing window, down the down tube, and into the drive-side shift housing stop in the bottom bracket cable guide.
   To determine the length of housing, use the previous piece as a guide, or install a new 1500mm piece that you will resize later.
5. Slide a piece of brake housing through the top tube housing window, down the down tube, and out of the bottom bracket (Figure 2). The housing should be in the middle, between the two derailleur housing stops.
   To determine the length of housing, use the previous piece as a guide, or install a new 700mm piece that you will resize later.
6. Leave the housing long (do not cut it yet).
7. Re-install the bottom bracket cable guide.

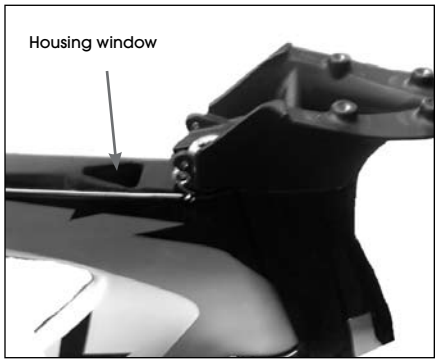

Figure 1. Housing window in the top tube

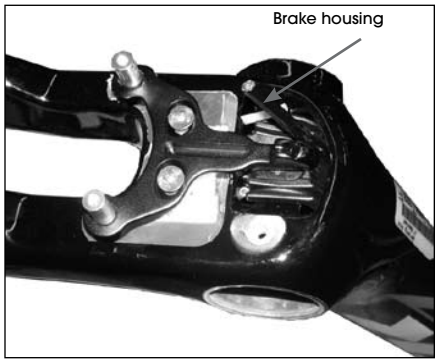

Figure 2. Brake housing protruding from the bottom bracket shell

To install the rubber top tube grommet

There is a seal, or rubber grommet, that seals around the housing and into the hole in the top tube (Figure 3). It has three holes in it, one for each of the cables that run through the frame.

1. Slide the brake housing through the cutout in the grommet and into the rear most hole (lower hole in the picture).
2. Slide the derailleur housings through the cutout in the grommet and place the front derailleur housing on the left and rear derailleur housing on the right.
3. With the round, box end of an 8mm wrench, press the edges of the grommet until it snaps fully into place and sits flush with the top tube.
   If it is not flush, it will rub on the stem when the aerobar is turned.

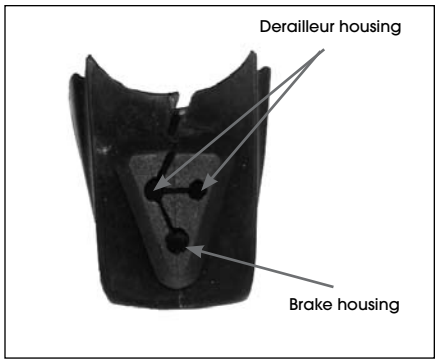

Figure 3. Top tube housing grommet

Aerobar Assembly

This section explains how to assemble the aerobar: the extensions, armrests, shift levers, and brake levers.

The size of stem (Table 3, page 10) controls the reach and height of the aerobar. The elbow pads are attached to the top of the aerobar, and their height is controlled by a spacer stack. The first spacer is permanently attached to the aerobar (Figure 2).



Figure 1. Completed aerobar assembly

To install the extensions and armrests

To install the extension tubes to the aerobar

The following letter references (A, B, C, etc.) are for Figure 3. The arm rests, arm pads, and extension tubes have a left and right part; these instructions do not say left or right, but assume you use left parts on the left, etc.

1. Determine the desired width and height of the extensions and armrests.
2. Loosely attach the upper brackets (I) and lower brackets (J) to the aerobar. Insert two extension tube clamp screws (H) through an upper bracket and a lower bracket, through the spacers and aerobar, and into the nuts (L).
   Determine the appropriate screw length from Table 2, below.

Table 2. Spacers (mm) and required bolts length (mm)

Spacer(s)	Screw
5	30
10	30
10 + 5	30
10 + 10	45
25	45
25 + 5	45
25 + 10	60
25 + 10 + 5	60
25 + 10 + 10	60
25 + 10 + 10 + 5	75

3. Place an extension tube clamp (G) between the upper and lower brackets, and tighten the extension clamp bolts until snug.
4. Slide an extension tube (M) through the extension tube clamp and adjust the position of the extension tube to the desired length and rotational angle.
   Do not clamp the end of the carbon tube; leave a minimum of 15 mm of extension tube exposed behind the arm rest bracket (E).

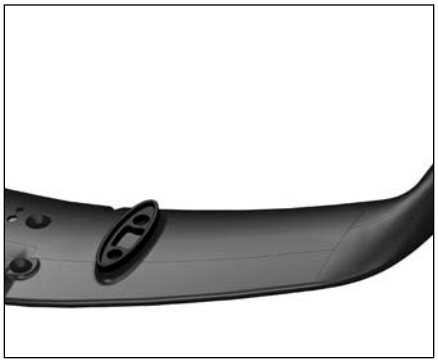

Figure 2. Permanent spacer bonded to aerobar

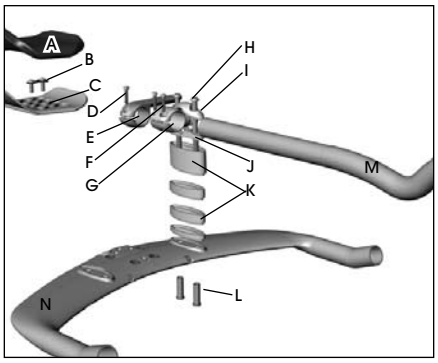

Figure 2. Aerobar assembly diagram and parts list
Note: for clarity, not all parts snown

	Part name	Quantity
A	Arm pad, right and left	1 ea
B	Screw, arm pad holder	4
C	Arm pad holder, right and left	1 ea
D	Pinch bolt, arm rest bracket	2
E	Arm rest bracket	2
F	Pinch bolt, extension tube clamp	4
G	Extension tube clamp	2
H	Screw, extension tube clamp	4
I	Upper bracket, extension tube clamp	2
J	Lower bracket, extension tube clamp	2
K	Spacers	see Table 2
L	Nut, extension tube clamp	
M	Extension tube	2
N	Aerobar	1

5. Insert the extension tube clamp pinch bolts (F) and tighten.
6. Slide an arm rest bracket (E) onto the extension tube.
7. Insert the arm rest bracket pinch bolt (D).
8. Adjust the arm rest bracket to the desired angle, and tighten the pinch bolt.
   Note: extreme angle adjustment might limit the ability of the arm pad holders to align correctly.
9. Repeats steps 2-8 for the other side of the aerobar.
10. Tighten all the fasteners.

To install the arm pad holders and arm pads

The width of the arm pad holders can be customized to suit your body type and riding style.

1. Insert two arm pad holder screws (B) through the desired holes of an arm pad holder (C) and into the arm rest bracket (E).
   Two screws are required per side to prevent the arm pad holders from spinning on the arm rest bracket.
2. Tighten the arm pad holder screws.
3. Repeat steps 1-2 for the other side.
4. Place the arm pads on the hook-and-loop fasteners of the arm pad holders.

To install the shifters

Install the shifters in the extensions following normal installation procedures. Do not overtighten the clamp wedge mechanism. Do not exceed 45 lb•in (5 N•m).

Do not drill or cut the extension tubes. Tighten the shift lever mounting bolt until the shift lever is firmly in place.

To install the brake levers

Install the brake levers following normal installation procedures. Do not overtighten the clamp or wedge mechanisms.

Aerobar Installation

After the housing is in the frame and you have assembled the aerobar, you can complete the aerobar installation. This requires that you simultaneously insert the housings into the aerobar and install the stem attachment hardware. If you anticipate possible stem or extension changes, you can leave up to 5cm extra housing. This much extra housing can be pushed into the downtube.



Figure 1. "Stem" of Speed Concept bike

To install the completed aerobar assembly

1. Choose a stem (Figure 1) from Table 3, below.

Table 3. Stem sizes (mm) and part numbers

	Near reach/rise	**Far** reach/rise
Low	50/10 302464	100/10 302467
Medium	60/45 302465	100/45 302468
High	80/75 302466	110/75 302469

2. Put a ferrule on the front brake housing.
3. Slide the housing into the aerobar (Figure 2) until you can connect the aerobar to the stem.
4. Install the aerobar attachment screws (Figure 3) and tighten.
5. Cut the housings to length.
6. Install the brake cable through the brake housing, and the derailleur cables into the correct housing for the front and rear derailleurs; but do not attach the cables to the derailleurs or rear brake yet.
   If you did not mark the derailleur housings, you will have to determine the correct housing for each cable through trial-and-error.
7. Install the screws that secure the stem cap (Figure 4): two cover hinge screws and the front cover screw.

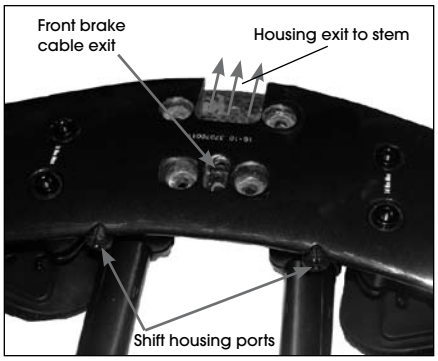

Figure 2. Cable routing through aerobar

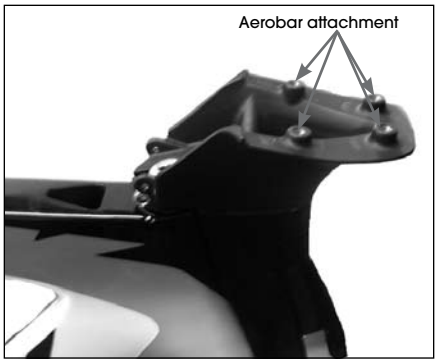

Figure 3. Stem attached to fork

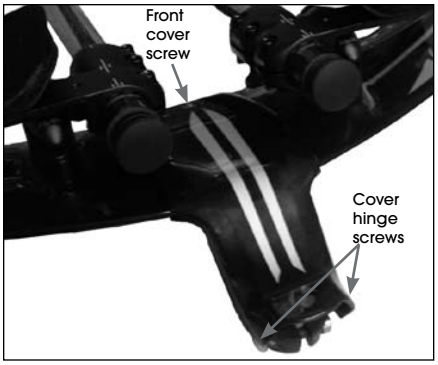

Figure 4. Cover on stem

Derailleur Cables

At this point in the assembly, the cables should be in the housing that runs through the downtube. These instructions explain the correct routing through the bottom bracket cable guide and to each of the derailleurs.

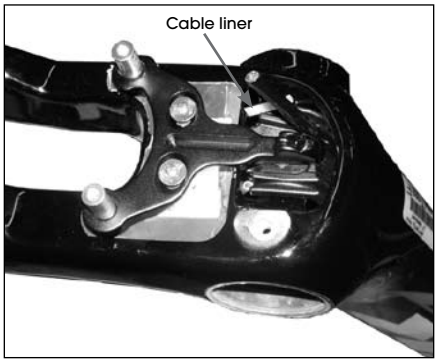

Figure 1. Cable liner for front derailleur in bottom bracket cable guide

To connect the front derailleur cable

1. Slide a piece of cable liner onto the front derailleur cable until the liner touches the back of the housing stop in the bottom bracket (Figure 1).
2. Orient the front derailleur liner grommet (Figure 2) and slide it onto the liner (Figure 3), and then snap the grommet into the frame hole in the seat tube.
3. Cut the liner so that it does not interfere with the action of the front derailleur.
4. Attach the cable to the derailleur and adjust as normal.

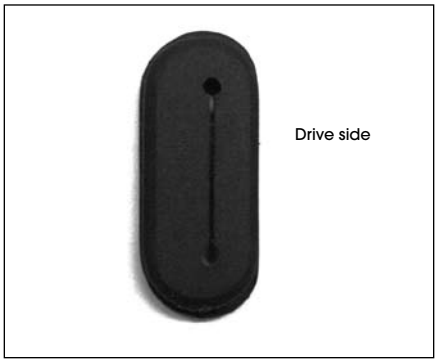

Figure 2. Correct orientation of seat tube grommet

To connect the rear derailleur cable

1. From the bottom bracket cable guide, run the bare cable (with no liner) through the chainstay and out the dropout exit hole.
2. Install the dropout housing stop in the dropout exit hole (Figure 4).
3. Measure and cut the rear derailleur housing.
4. Install the housing, connect the cable to the derailleur, and adjust the derailleur as normal.

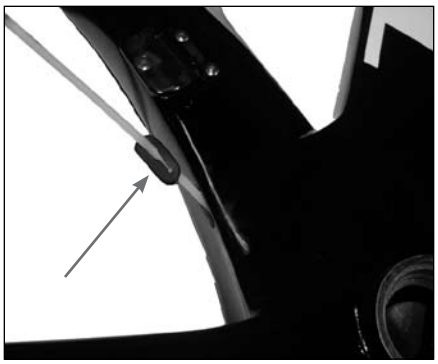

Figure 3. Seat tube grommet on cable liner to front derailleur



Figure 4. Rear derailleur cable passing through the dropout housing stop

Front Brake

The front brake on the Speed Concept bike (Figure 1) is hidden from the wind and from your eyes. But when correctly assembled and adjusted, they work very well. The Speed Concept brakes use wedge/roller actuation (Figure 2), so cable tension is critical.

The design of the front and rear brake design is different, so the instructions are also. Follow the steps carefully, in order.

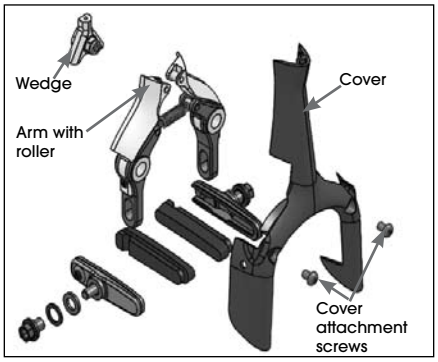

Figure 1. Exploded view of front brake

To install and adjust the front brake

1. Place a ferrule on the end of the housing to be inserted in the aerobar.
2. Slide the housing through the aerobar (The routing varies according to the stem size; see Figure 3 or Figure 4).

continued


Figure 2. Wedge between rollers


Figure 3. Housing (and cable) route through aerobar for low/near and medium/near stems


Figure 4. Housing route through aerobar for all stems except low/near and medium/near

Front Brake (cont.)

3. Measure the housing at the lever, then cut to length (Figure 5).
4. Slide the cable through the housing.
5. Slide the wedge up the cable, and place it between the rollers (Figure 3).
6. Pull the cable tight and note the position of the wedge on the cable.
7. Remove the wedge from the rollers, move the wedge up the cable about 1 mm, and tighten the cable clamp bolt.
   Hold the top and bottom surfaces of the wedge with pliers or an adjustable wrench while you tighten the nut (Figure 6).
   Note: Do not leave the wedge in the brake while you tighten the nut; this could damage the wedge.
8. Re-install the wedge between the rollers.
   Do not cut the cable yet. Tuck the cable out of the way.
9. Set the pad spacer (see Table 4, below) and align the brake pads with the rim.

Table 4. Brake pad spacing between pads and brake arms

Rim width, mm	Spacer location
19	Inside brake arms
21	Inside brake arms
23	Outside brake arms
25	Outside brake arms

10. Size and cut the cable, and reattach the wedge.
11. Finish the end of the cable so that it will not interfere with the brake return spring.
    If you choose to only cut the cable and not dress the end, the extended tunnel of the wedge prevents immediate fraying of the cable.
    If desired, solder the end. Or install a cable crimp, then bend it forward.
12. Engage the tab of the brake cover with the fork, then swing the brake cover into place and install the two attachment screws (Figure 7).
13. Center and space the pads precisely with the brake with the adjusting screws (Figure 8 shows the screws, which are accessible through holes in the brake cover).
14. Install the grommets into the heads of the attachment screws.

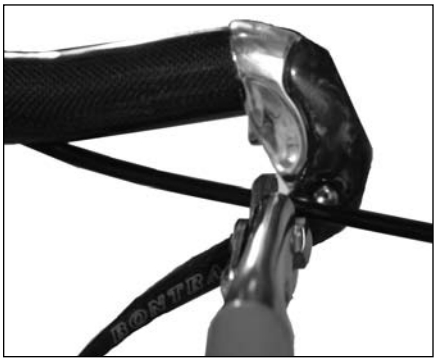

Figure 5. Setting the length and cutting the housing

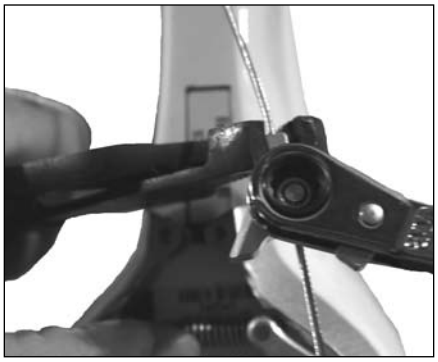

Figure 6. Hold the wedge while you tighten the clamp bolt

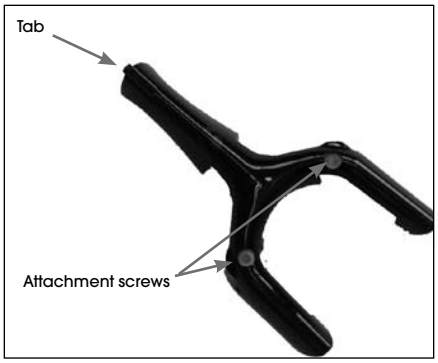

Figure 7. Front brake cover



Figure 8. Adjusting screw for front brake (screw is accessible through cover)

Rear Brake

The rear brake (Figure 1) on the Speed Concept bike use a wedge/roller actuation (Figure 2), so cable tension is critical.

The design of the front and rear brake design is different, so the instructions are also. Follow the steps carefully, in order. The rear brake is inside a cover (Figure 3), under the bottom bracket. It is mounted on a bracket that is bolted to the frame. The bracket can be moved, allowing you to center the brake.

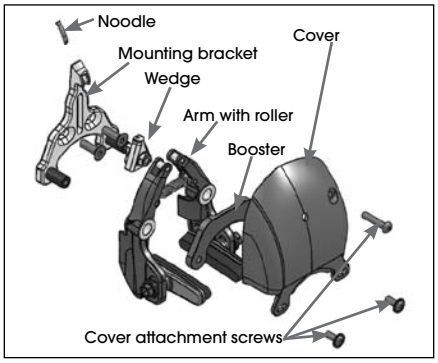

Figure 1. Exploded diagram of rear brake

To install and adjust the rear brake

1. Loosen the two bracket attachment bolts (Figure 4), center the brake, and retighten the bolts.
2. Slide the cable out through the housing, the noodle (short plastic liner in the cable guide), and the cable guide of the mounting bracket (Figure 1).
   If the brake housing has come out of the housing stop of the mounting bracket (Figure 4), remove the bracket, install the housing in the stop, and reinstall the bracket.
3. Slide the wedge up the cable, and place it between the rollers (Figure 2).
4. Loosen the cable clamp bolt, pull the cable tight, and note the position of the wedge on the cable.

continued


Figure 2. Wedge and rollers

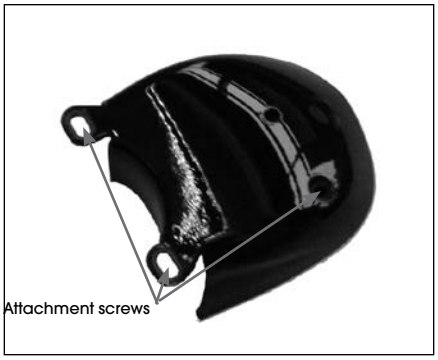

Figure 3. Cover for rear brake

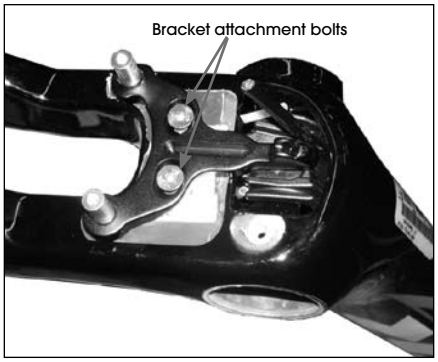

Figure 4. Brake bracket attached to frame

Rear brake (cont.)

5. Remove the wedge from the rollers, move the wedge up the cable about 1 mm, and tighten the cable clamp bolt. Hold the top and bottom surfaces of the wedge with a pliers or an adjustable wrench while you tighten the nut (Figure 5).
   Note: Do not leave the wedge in the brake while you tighten the nut; this will break the delrin guide on the back of the wedge.
6. Re-install the wedge.
   Do not cut the cable yet. Tuck the cable out of the way.
7. Set the pad spacers (see Table 5 below) and align the brake pads with the rim.
   The rear brake does not have a centering screw. To move the brake side-to-side, loosen the bracket attachment bolts, reposition the brake, and re-tighten the bolts.

Table 5. Brake pad spacing between NEW pads and brake arms, mm of spacers for two pad types

Rim width (mm)	Brake pad type	
	Rubber	Cork
19	3	Not compatible
20	3	3
21	1.5	3
22	1.5	3
23	1.5	3
24	0	3
25	0	1.5

8. If needed, re-center the brake.
9. Size and cut the cable, and reattach the wedge.
10. Finish the end of the cable so that it will not interfere with the brake return spring.
    If you choose to only cut the cable and not add anything, the extended tunnel of the wedge prevents immediate fraying of the cable.
    If desired, solder the end. Or install a cable crimp, then bend it downward.
11. Place the brake booster over the brake (Figure 6).
12. Install the three brake cover attachment screws (Figure 7), two of which also attach the brake booster.



Figure 5. Holding the wedge while tightening the cable clamp nut



Figure 6. Brake booster (rear brake only)

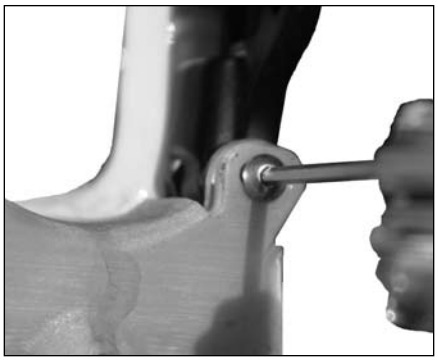

Figure 7. Attaching the rear brake cover over the brake booster

DuoTrap Computer Sensor

The 2011 Speed Concept frame includes a special pocket on the left chainstay for installation of the Bontrager DuoTrap sensor that combines speed and cadence sensing in a single, wireless unit. This unit attaches through a hole in the chainstay (Figure 1).

To install a Duotrap sensor

1. Remove the attachment screw and the cover plate over the chainstay.
2. Slide the cylindrical part of the sensor through the chainstay (Figure 2) until the sensor sits flush (Figure 3).
3. Install the attachment screw and tighten.
4. Place the rubber plug over the attachment screw (Figure 3).



Figure 1. Hole through the chainstay for Duotrap sensor

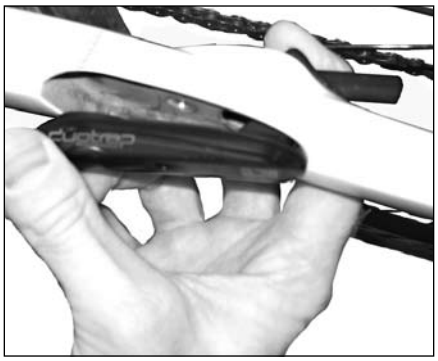

Figure 2. Sliding the speed cylinder of a Duotrap sensor through the chainstay

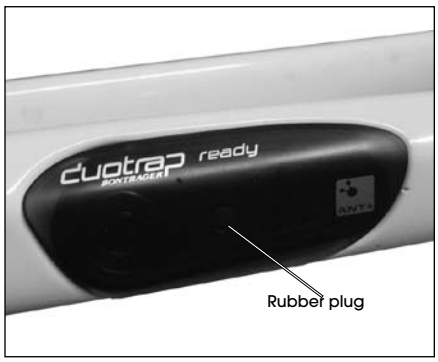

Figure 3. Duotrap sensor installed on chainstay

Draft Storage Box

The 2011 Speed Concept frame can be equipped with an optional storage box (Figure 1) which is placed behind the seat tube, out of the wind resistance. The box is held in place by clamping the seatstays.

To install a storage box

1. Squeeze the side tabs (Figure 1) to open the lid.
2. Loosen the clamp bolt (Figure 2).
   You do not need to completely remove the bolt.
3. Remove the rear wheel from the frame.
4. Slide the draft box between the seatstays (Figure 3).
5. While holding the draft box in position (Figure 1), tighten the clamp bolt until the draft box is secure.

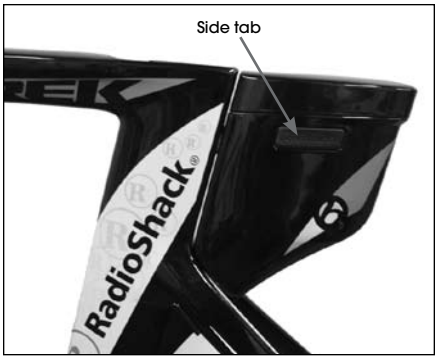

Figure 1. Draft storage box behind the seat tube (seatpost removed)

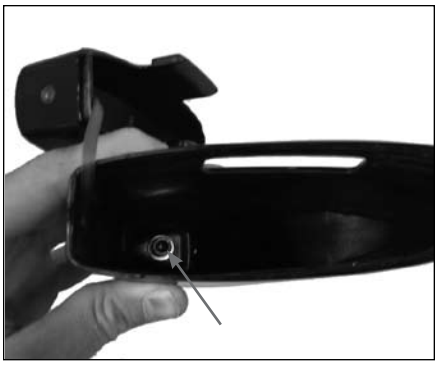
Figure 2. Clamp bolt in bottom of draft box



Figure 3. Placing draft box between seatstays

Crankset

The Speed Concept uses the same bearing system as a Madone; there are no parts that thread into the frame. Instead, the bearings are a slip-fit into the frame. However, the Speed Concept uses the new tighter fit of the bearings, which may require using a headset press (see page 19).

Bearings kits are available for all major brand of cranksets: SRAM/TruVativ/Bontrager GXP, Shimano HollowTech, Campagnolo UltraTorque, and FSA MegaExo.

Each kit includes a slightly different set of bearings, seals, and spacers. When installing other crankset systems, follow the manufacturer's instructions to achieve the correct assembly and adjustment.

Do not use a hammer or bearing press to install the bearings into the frame. If the bearing fit is too tight, make sure the bearing seats are clean and free of debris.

All bottom bracket systems share the same procedure to install the bottom bracket shields. Do these steps before installing the bearings.

To install the axle shields

Your frame may already have the axle shields installed in the frame.

1. Apply a light coat of grease to the male axle shield (smaller diameter, Figure 1).
2. Place the male axle shield into the bottom bracket shell from the drive side (Figure 2).
3. Place the female (larger diameter) axle shield into the bottom bracket shell from the non-drive side.
4. With the installation tool (Figure 3), push together the two halves of the axle shield. When they are inserted in the correct position, there will be an audible click.
5. Go to the instructions (on the following pages) for the bearing system you want to install.



Figure 1. Applying grease to the axle shield



Figure 2. Inserting one half of the axle shield into frame

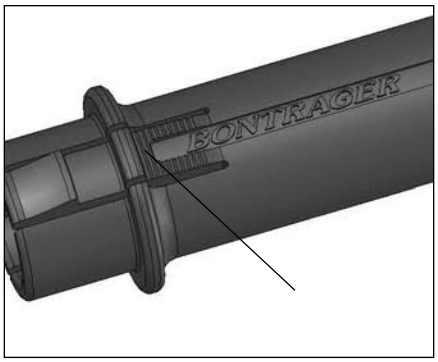

Figure 3. Release tab

Pressing bearings

The bearing fit is tighter in the Speed Concept than in early Madone models. If the bearings do not slip in by hand, follow this procedure after you have installed the bearing shield (page 21).

Notes:

- Be very careful when using the press. Too much force can crack the bottom bracket shell.
- Press in one bearing at a time.

Tools required

Installation

- Park headset press

Removal

- Brass punch
- Hammer



Figure 1. Using a headset press to install the bearings

To press a bearing

1. Install the bearing shield.
2. Press the bearing into the frame by hand as far as possible.
3. With the cup guide on the bearing side (Figure 1), slide the bearing press through the bearing and frame.
4. Center the guide in the bearing.
5. Press the bearing into the bottom bracket shell until the bearing is flush with the shell.

To remove a bearing

If you cannot remove a bearing because it is stubborn, follow these directions.

1. Remove the crankset.
2. Slide the punch through one side of the bottom bracket shell to the back side of the bearing.
3. Position the punch on the inside ring of the bearing.
4. Gently tap the punch with the hammer, then move 90 degrees around the bearing and tap again.
5. Continue tapping and moving around the bearing. TAP GENTLY.
6. Go around the bearing and keep tapping.
   DO NOT HIT HARD. Excessive force can damage the bottom bracket shell.

SRAM GXP

These instructions explain how to install a SRAM/TruVativ/Bontrager GXP crankset (Figure 1) in a new Speed Concept. To complete the installation, you will also need the SRAM instructions, available at: http://www.sram.com/_media/techdocs/2005_gxp-05-r5-e.pdf

Tools and materials required

- Crankset and bottom bracket
- 8 mm allen wrench
- Bearing installation tool PN 404694
- Rock "N" Roll Super Coat grease
- Bottom bracket parts
- TruVativ GXP installation instructions

Part description		SRAM
Kit		404700
Ceramic kit		411814
Drive side parts		
	Bearing	281824
	Ceramic Bearing	293617
	Seal	281820
	Axle shield	281823
	Wave washer	282866
Non-drive side parts		
	Bearing	282864
	Ceramic Bearing	293618
	Seal	282865
	Axle shield	281822

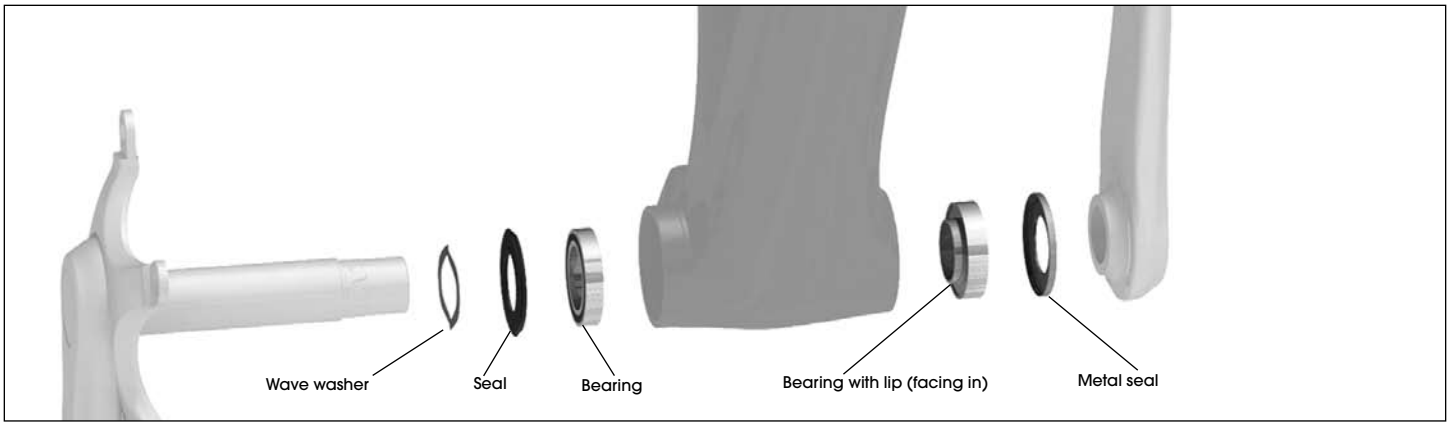

Figure 1. SRAM bearing set

To install the bearings

1. Apply a liberal coat of grease to the contact surfaces of one bearing and the drive side of the bottom bracket shell (Figure 1).
2. Slide a bearing onto the installation tool.
   Either side of the drive-side bearing is the "right side." The non-drive bearing on GXP systems has a lip (Figure 2). Install the bearing so that the lip faces in.
3. Press one bearing into the drive side of the bottom bracket shell (Figure 3).
   To remove the installation tool, press the release tab.
4. Repeat steps 1-3 for the other bearing on the non-drive side.

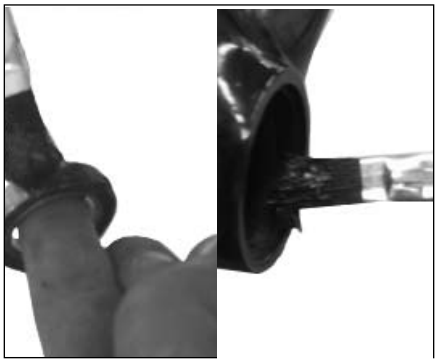

Figure 1. Greasing the bearing and the frame saddle

To install the drive-side crankarm

When handling the seals, avoid bending them. A bent seal will rub on the bearing, creating drag.

1. Apply a light coat of grease to the bearings on the face and the axle contact surface.
2. Apply a light coat of grease to the metal inside of one bearing seal (Figure 4).
3. Install the wave washer and with the grease facing up, slide the bearing seal onto the axle (Figure 5).
4. Apply a light coat of grease to the bearing contact area of the axle (Figure 6).
   The grease areas should be about 1 inch (25 mm) wide. On the drive side, start at the bearing seal. On the non-drive side, start at the splines and apply toward the drive side of the axle
5. Insert the axle through the drive-side bearing in the bottom bracket (Figure 7).

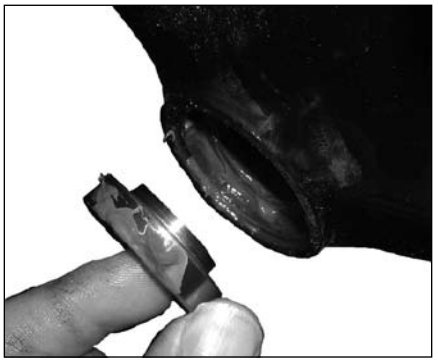

Figure 2. Grease on the frame and the non-drive side bearing (with the lip facing in)



Figure 3. Pressing the bearing into the frame



Figure 4. Greasing the bearing covers

To install the non-drive side crankarm

1. Apply a light coat of grease to the inside of the metal bearing seal.
2. With the grease side toward the bearing, slide the bearing seal onto the axle (Figure 8).
3. Follow the TruVativ GXP installation instructions to complete to install the non-drive crank arm.
4. Tighten the crank bolt to the torque specifications (see page 38).
5. Follow the steps in "Inspecting the bottom bracket."



Figure 5. Sliding the wave washer and bearing cover onto the axle

To remove the bottom bracket bearings

The Speed Concept bottom bracket bearing system is designed to be a slip fit. However, after the first installation some bearings might be tight. If the bearings do not easily come out by hand, you may use the following method to remove them.

1. Slide the crank axle into the bearing so that the bearing is over the non-drive side of the axle, about 1 inch (25 mm) from the non-drive end.
2. Gently rock the axle while you pull the axle out.



Figure 6. Greasing the axle

Inspecting the bottom bracket

Every 3 months check the bottom bracket adjustment.

To check the bottom bracket bearing adjustment

1. Lift the chain from the chainrings.
2. Rotate the crank so that one of the arms is parallel to the seat tube.
3. Put one hand on the crank arm and one hand on the seat tube, and attempt to move the crank arm laterally toward and away from the seat tube.
4. Spin the cranks.

If the crank feels or sounds loose, or if the motion stops abruptly or you hear a grinding noise coming from the bearings, readjust the bearings or take the bike to your Trek dealer.



Figure 7. Sliding the axle through the bearings



Figure 8. Metal bearing cover in place over the bearing

Shimano HollowTech

These instructions explain how to install a Shimano HollowTech (Figure 1) in a new Speed Concept. To complete the installation, you will also need the Shimano instructions, available at: http://techdocs.Shimano.com/media/techdocs/content/cycle/SI/Dura-Ace/FC-7800-7803/SI_1F30H_En_v1_m56577569830605111.pdf.

Tools and materials required

- Crankset and bottom bracket
- Shimano FC16 crank arm installation tool
- 5 mm Allen Wrench
- Bearing installation tool PN 404694
- Rock "N" Roll Super Coat grease
- Bottom bracket parts

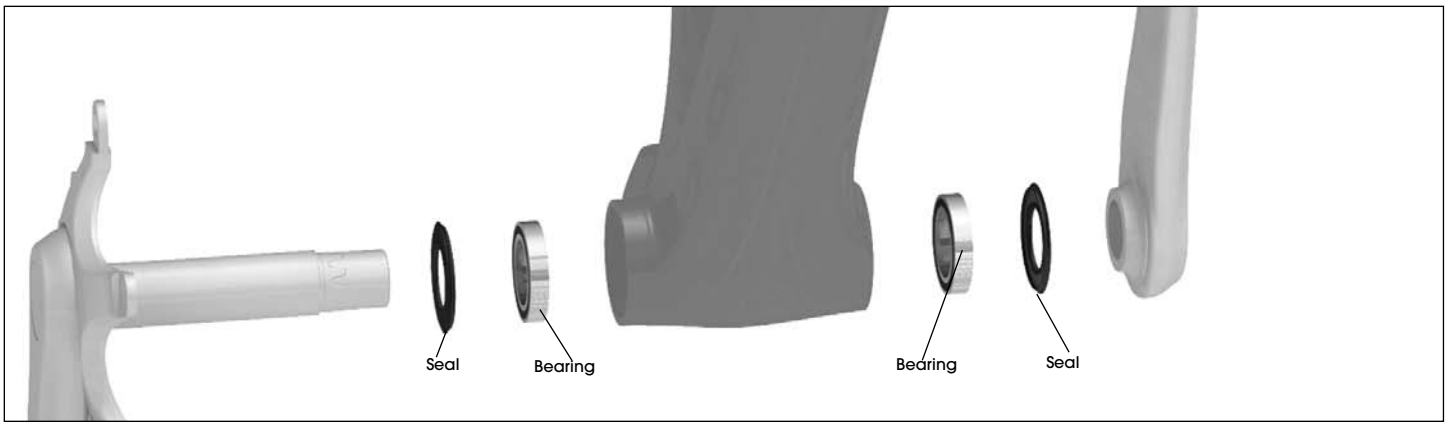

Figure 1. Shimano bearing set

Part description		Shimano
Kit		404699
Ceramic kit		411813
Drive side parts		
	Bearing	281824
	Ceramic bearing	295213
	Seal	281820
	Axle shield	281823
	Wave washer	-
Non-drive side parts		
	Bearing	281824
	Ceramic bearing	295213
	Seal	281820
	Axle shield	281822

To install the bearings

1. Apply a liberal coat of grease to the contact surfaces of one bearing and the drive side of the bottom bracket shell (Figure 2).
2. Slide a bearing onto the installation tool.
   Either side of the bearing is the “right side.”
3. Press one bearing into the drive side of the bottom bracket shell (Figure 3).
   To remove the installation tool, press the release tab (Figure 3).
4. Repeat steps 1-3 for the other bearing on the non-drive side.

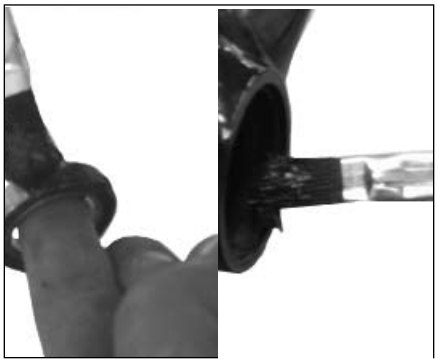

Figure 2. Greasing the bearing and the frame seat



Figure 3. Pressing the bearing into the frame

To install the drive-side crankarm

When handling the seals, avoid bending them. A bent seal will rub on the bearing, creating drag.

1. Apply a light coat of grease to the bearings on the face and the axle contact surface.
2. Apply a light coat of grease to the metal inside of one bearing seal (Figure 4).
3. With the grease facing up, slide the bearing seal onto the axle (Figure 5).
4. Apply a light coat of grease to the bearing contact area of the axle (Figure 6). The grease areas should be about 1 inch (25 mm) wide. On the drive side, start at the bearing seal. On the non-drive side, start at the splines and apply toward the drive side of the axle
5. Insert the axle through the drive-side bearing in the bottom bracket (Figure 7).



Figure 4. Greasing the bearing covers



Figure 5. Sliding the bearing cover onto the axle



Figure 6. Greasing the axle



Figure 7. Sliding the axle through the bearings

To install the non-drive side crankarm

1. Apply a light coat of grease to the inside of the other bearing seal.
2. With the grease side toward the bearing, slide the bearing seal onto the axle (Figure 8).
3. Align the non-drive crank arm with the groove on the axle and slide the crank onto the axle.
   The non-drive crank arm should point 180 degrees opposite of the drive-side crank arm.
4. With the plastic installation tool, press the crank onto the axle (Figure 9) as far as it will go.
5. Release the installation tool and spin the cranks 10 to 20 revolutions.
6. Follow the Shimano instructions to complete the installation.
7. Follow the steps in "Inspecting the bottom bracket."



Figure 8. Pressing in the second bearing cover



Figure 9. Pressing the crank arm onto the axle

To remove the bottom bracket bearings

The Speed Concept bottom bracket bearing system is designed to be a slip fit. However, after the first installation some bearings might be tight. If the bearings do not easily come out by hand, you may use the following method to remove them.

1. Slide the crank axle into the bearing so that the bearing is over the non-drive side of the axle, about 1 inch (25 mm) from the non-drive end.
2. Gently rock the axle while you pull the axle out.

Inspecting the bottom bracket

Every 3 months check the bottom bracket adjustment.

To check the bottom bracket bearing adjustment

1. Lift the chain from the chainrings.
2. Rotate the crank so that one of the arms is parallel to the seat tube.
3. Put one hand on the crank arm and one hand on the seat tube, and attempt to move the crank arm laterally toward and away from the seat tube.
4. Spin the cranks.
   If the crank feels or sounds loose, or if the motion stops abruptly or you hear a grinding noise coming from the bearings, readjust the bearings or take the bike to your Trek dealer.

Campagnolo UltraTorque

The Speed Concept uses a special bearing system that has no parts that thread into the frame. Instead, the bearings are a slip-fit into the frame. However, the Campagnolo UltraTorque system requires you to attach bearing supports (seal seats) to the Speed Concept bottom bracket shell (Figure 1). This section explains how to do that.

The seal seats might fit into the frame tightly. In this case, you might need to tap the cups with a soft-faced mallet. However, do not use a hammer or bearing press to install the bearings into the frame. If the bearing fit is too tight, make sure the seal seats are clean and free of debris.

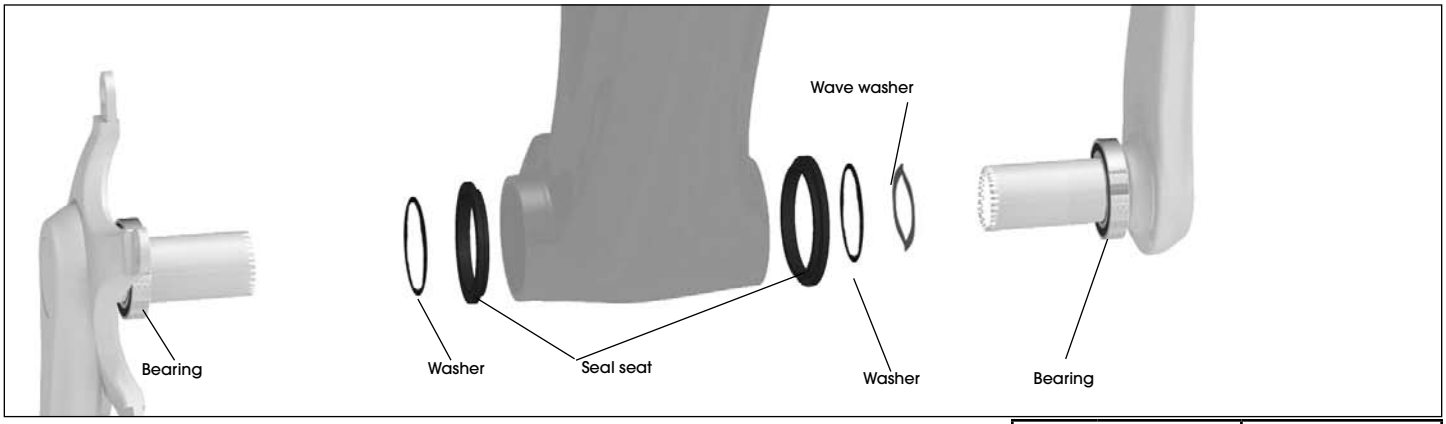

Figure 1. Campagnolo bearing set

Tools and materials required

To complete the installation, you will need the Campagnolo instructions, available at: http://www.campagnolo.com/pdf/7225306_Ultra_torque_05_07.pdf.

Also read the warning: http://www.campagnolo.com/pdf/7225365_warning_Ultra_Torque_0607.pdf

- Crankset and bottom bracket (bearings come pressed onto the axle halves)
- Plastic crank arm installation tool
- LocTite® 638 retaining compound, TCG 408082
- LocTite® primer 7649, TCG 408083
- 5 mm Allen Wrench
- Rock "N" Roll Super Coat grease
- Bottom bracket parts

Part description		Campagnolo
Kit		407383
Drive side parts		
	Bearing	Campy part
	Seal seat	281825
	Axle shield	281823
	Washer	281826
Non-drive side parts		
	Bearing	Campy part
	Seal seat	281825
	Wave washer	281827
	Axle shield	281823
	Washer	281826

To install the seal seats

1. Clean all surfaces to be bonded (bottom bracket shell, seal seats) with alcohol wipes or similar (Figure 2).
2. Apply a thin film of LocTite Primer to the outer step of the bearings cups and the outer shoulder of the bottom bracket shell (Figure 3). Allow the primer to evaporate completely.
3. Apply LocTite 638 to the faced of the seal seat that contacts the bottom bracket shell.
4. Press the seal seat into the frame (Figure 4). If needed, tap lightly with a soft-faced mallet.

Let the LocTite cure for at least 24 hours before inserting the bearings.



Figure 2. Cleaning bonding surfaces with an alcohol wipe

To install the non-drive side bearings

1. Insert a washer into the non-drive side seal seat.
2. Apply a liberal coat of grease to the contact surfaces of the bearing (Figure 5) and the non-drive side seal seat (Figure 6). Insert the Wave washer into the non-drive side seal seat (Figure 7).
3. Slide the non-drive side axle through the seal seat and bottom bracket shell (Figure 8).



Figure 3. Applying LocTite primer to the outer step of the bearing cups

To install the drive side bearings

1. Insert a washer into the drive side seal seat.
2. Apply a liberal coat of grease to the contact surfaces of the bearing (Figure 5) and the



Figure 4. Inserting the bearing cups into the bottom bracket shell



Figure 5. Greasing the bearings

drive side seal seat (Figure 6).

3. Slide the drive side axle through the seal seat and bottom bracket shell (Figure 8).
4. Line up the splines of the bottom bracket axle and press the axle together. If necessary, tap the ends together with the heel of your palms.
5. Insert the crank bolt from the drive side (Figure 9) and tighten to the torque specifications (see page 38).
6. Follow the steps in "Inspecting the bottom bracket."

To remove the bottom bracket bearings

With the Campagnolo system, each of the two bearings are pressed onto one of the halves of the bottom bracket axle. To remove the bearings, follow the Campagnolo service instructions.

Inspecting the bottom bracket

Every 3 months check the bottom bracket adjustment.

To check the bottom bracket bearing adjustment

1. Lift the chain from the chainrings.
2. Rotate the crank so that one of the arms is parallel to the seat tube.
3. Put one hand on the crank arm and one hand on the seat tube, and attempt to move the crank arm laterally toward and away from the seat tube.
4. Spin the cranks.
   If the crank feels or sounds loose, or if the motion stops abruptly or you hear a grinding noise coming from the bearings, readjust the bearings or take the bike to your Trek dealer.

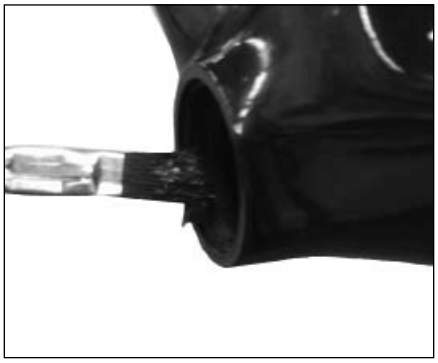

Figure 6. Greasing the bearing cups



Figure 7. Inserting the Wave washer (after the washer) on the non-drive side



Figure 8. Inserting the non-drive side axle

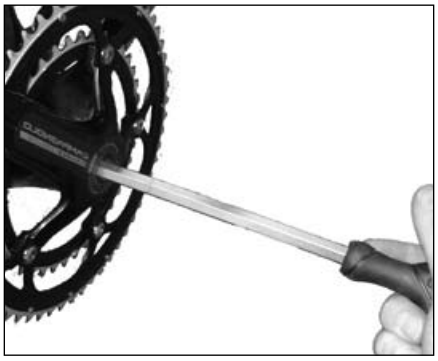

Figure 9. Tightening the axle bolt

FSA MegaExo AL

These instructions and parts are for the aluminum FSA cranks only. The current "B" kit will not work for FSA carbon cranks.

The Speed Concept uses a special bearing system that has no parts that thread into the frame. Instead, the bearings are a slip-fit into the frame (Figure 10). This section explains how to install the bearings and crankset.

The bearings might fit into the frame tightly. In this case, you might need to tap them with a soft-faced mallet. However, do not use a hammer or bearing press to install the bearings into the frame. If the bearing fit is too tight, make sure the bearings are clean and free of debris.

Part description		FSA
BB90 bearing kit "B"		293227
Drive side parts		
	Axle shield	281823
	Bearing	300162
	Seal	294668
Non-drive side parts		
	Axle shield	281822
	Bearing	300162
	Seal	294668

Tools and materials required

To complete the installation, you will also need the FSA instructions, available at: http://www.road.fullspeedahead.com/downloadfly.aspx?download=downloads/Install_MegaExoAlloy.pdf.

- Crankset and bearings (bearing shields come pressed onto the bearings)
- 5 mm Allen Wrench
- Rock "N" Roll Super Coat grease
- Bottom bracket parts

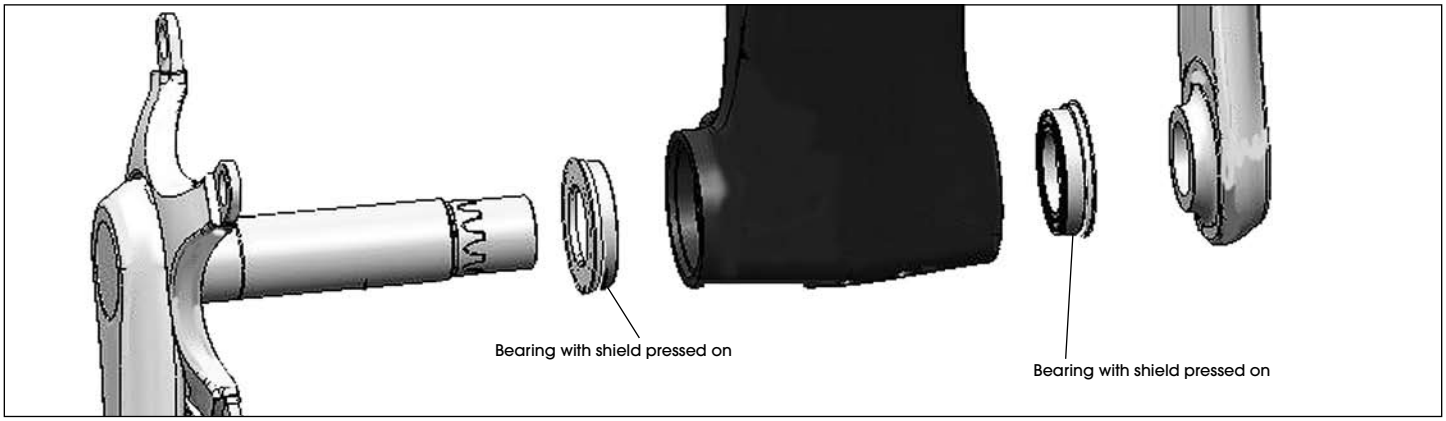

Figure 10. FSA bearing set

To install the bearings

1. Apply a liberal coat of grease to the contact surfaces of one bearing and the drive side of the bottom bracket shell (Figure 11).
2. With the plastic bearing shield facing out, press one bearing into the drive side of the bottom bracket shell (Figure 12).
3. Repeat Steps 1-2 for the other bearing on the non-drive side.

To install the drive-side crankarm

1. Apply a light coat of grease to the axle surface where the bearings will be in contact (Figure 13).
   The grease areas should be about 1 inch (25 mm) wide. On the drive side, start at the bearing seal. On the non-drive side, start at the splines and apply toward the drive side of the axle
2. Insert the axle through the drive-side bearing in the bottom bracket (Figure 14).

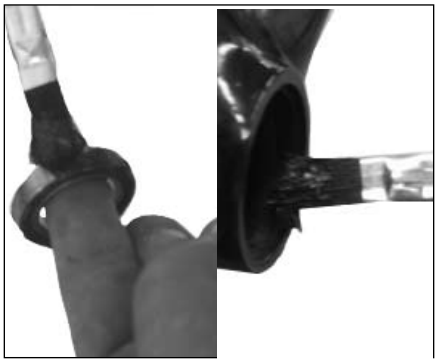

Figure 11. Greasing the bearing and the frame saddle

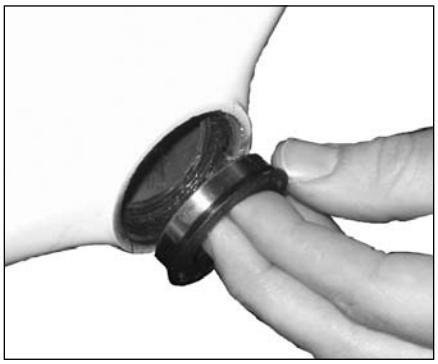

Figure 12. Pressing the bearing into the frame with the shield on the outside

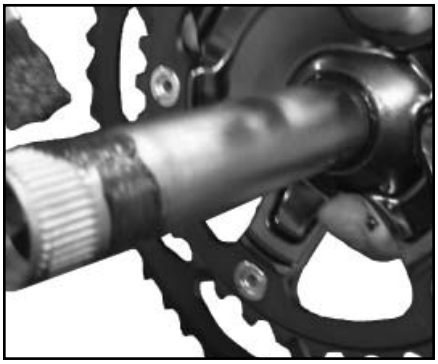

Figure 13. Greasing the axle



Figure 14. Sliding the axle through the bearings

To install the non-drive side crankarm

1. Align the non-drive crank arm with the groove on the axle and slide the crank onto the axle.
   The non-drive crank arm should point 180 degrees opposite of the drive-side crank arm.
2. Install the FSA crank bolt and tighten to their torque specifications (Figure 15).
3. Follow the FSA instructions to complete the installation.
4. Follow the steps in "Inspecting the bottom bracket."



Figure 15. Pressing the crank arm onto the axle

To remove the bottom bracket bearings

The Speed Concept bottom bracket bearing system is designed to be a slip fit. However, after the first installation some bearings might be tight. If the bearings do not easily come out by hand, you may use the following method to remove them.

1. Slide the crank axle into the bearing so that the bearing is over the non-drive side of the axle, about 1 inch (25 mm) from the non-drive end.
2. Gently rock the axle while you pull the axle out.

Inspecting the bottom bracket

Every 3 months check the bottom bracket adjustment.

To check the bottom bracket bearing adjustment

1. Lift the chain from the chainrings.
2. Rotate the crank so that one of the arms is parallel to the seat tube.
3. Put one hand on the crank arm and one hand on the seat tube, and attempt to move the crank arm laterally toward and away from the seat tube.
4. Spin the cranks.
   If the crank feels or sounds loose, or if the motion stops abruptly or you hear a grinding noise coming from the bearings, readjust the bearings or take the bike to your Trek dealer.

Crankset Troubleshooting

This section describes problems that occasionally occur, and possible solutions. If these solutions do not solve a problem, contact Customer Service.

Bearing play in a GXP crank or bottom bracket assembly

The crank feels loose when grasped at the pedal end and rocked side-to-side.

Cause	Solution
Wave washer not compressed fully This is usually caused by insufficient torque on the non-drive crank arm. In rare instances a tolerance stack can be created by the five critical parts: non-drive bearing, drive bearing, drive-side seal, bottom bracket shell, and axle length.	First, verify that the crank has been tightened to the torque specifications (see page 38). Most issues with play in GXP crankarms are resolved when the arms are properly tightened. If this does not solve the issue, add a 0.5mm washer/spacer (PN 294162) between the wave washer and seal (Figure 1) to increase the bearing preload.
Spline of GXP crankarm is undersized • We have seen some variation in the tolerance of GXP crankarms. • If the installation torque is not sufficient, the crank arm will not completely compress the shield and bearing race.	Remove the crankarm and re-install with plenty of grease. Verify that the crank has been tightened to the torque specifications (see page 38). Re-check the bearings after installation. The GXP axle spline is tapered, so it requires that the crank be completely tightened to seat on the axle.

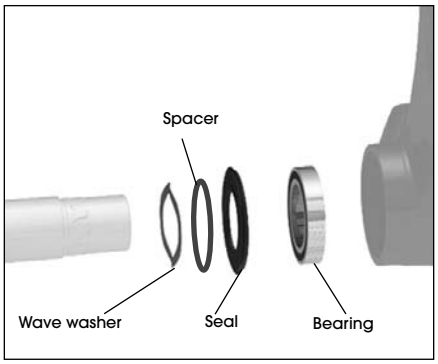

Figure 1. SRAM bearing set

Crank is rubbing or there is excessive drag

If you notice that the crank arms rotate poorly, there are several possible issues.

Cause	Solution
Out of spec or bent non-drive metal seal • The inside chamfer of the metal seal (Figure 2) rubs on the outer race of the bearing. • The metal seal deforms under the compressive load of the non-drive arm and rubs on the outer race of the bearing.	Install a new metal seal (same Part Number: 282865). We have revised the metal seal by adding a ring of material, 0.3mm thick, to the seal around the inner diameter. This will move the outer edge of the seal away from the bearing.
Bearing not seated properly • The axle shield might not be seated completely in the frame (Figure 3) causing the flange of the shield to foul the bearing. • A tight bore can cause the installer to think the bearing is seated when it is not.	Make sure the halves of the axle shield are snapped together, and then remove and reinstall the bearing. When properly installed the bearing will not sit even with bottom bracket shell. •Enduro bearing: 0.75mm inside the shell. •GXP non-drive bearing: 0.25mm outside the shell

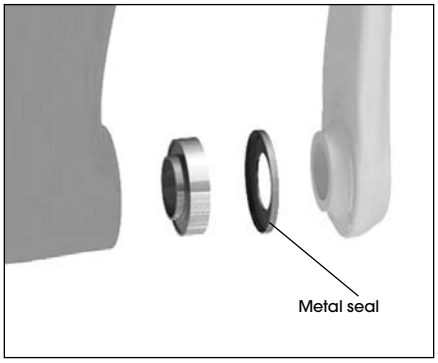

Figure 2. SRAM bearing set


Figure 3. Inserting one half of the axle shield into frame

GXP triple crankset can't be properly preloaded

Although some cranksets change the arm configuration to add clearance for a third chainring, the GXP crankset uses a longer axle. Without additional spacers, a longer axle will not compress the bearing..

Cause	Solution
Different axle lengths require different spacers Triple GXP crank axles are 5mm longer than doubles.	Install a 5mm thick spacer (Part Number 291276) between the wave washer and the red bearing seal (Figure 4).

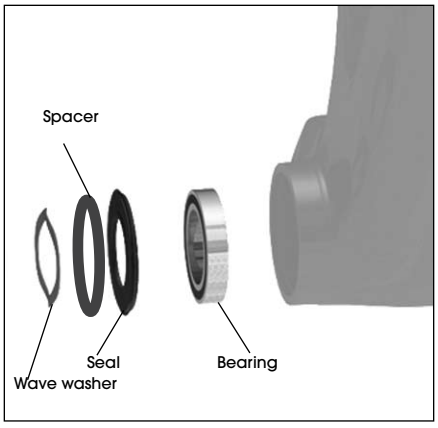

Figure 4. SRAM bearing set