Radar Cycling Computer

- **Owner's Manual**
  Manual de
  Instrucciones
  Mode d'emlploi
  Bedienungsanleitung
  Manuale d'istruzione
  Bedieningshandleiding

TREK

Installation

Sensor and Wheel Magnet

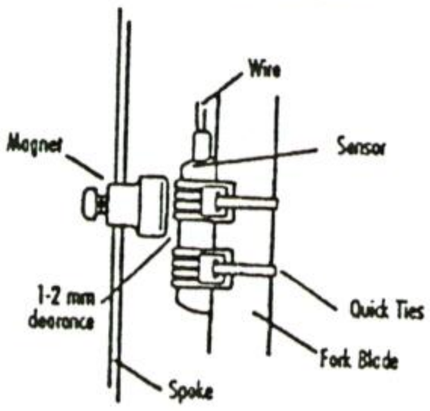

1. Position the sensor unit to the inside of either the right of left fork blade anywhere from 3-6 inches up from the fork blade tip. Attach the sensor to the fork blade with the quick ties but do not tighten the ties completely until final adjustment is complete.
2. Attach the wheel magnet to a spoke, aligning the magnet with the sensor so it faces and intersects the top polished line of ridges on the sensor. The magnet should have 1-2 mm clearance from the sensor. If the sensor and magnet are too close or touching, rotate the sensor unit toward the back of the fork blade until adequate clearance is achieved. Carefully tighten the quick ties making sure you maintain the proper space between the magnet and the sensor. Trim the excess Quick tie strap using a scissors or fingernail clipper. Tighten the magnet screw, but be careful not to over tighten as this can damage the fitting.

Sensor Wiring and Bracket

Sensor wires must not be wrapped together with other electrical wires (lights, horns, etc.). This may cause erratic computer readings.

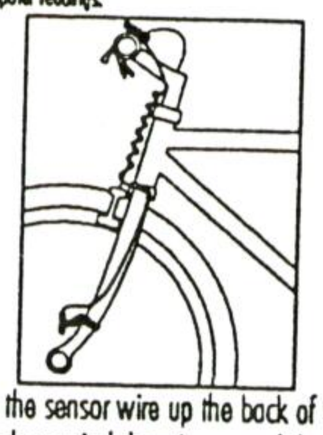

1. Route the sensor wire up the back of the fork blade or wind the wire around the blade, making sure that the wire is not loose and that you leave enough wire to reach the handlebar. Secure the wire to the fork blade immediately above the sensor and at the top of the fork blade, using the adhesive strips that are provided.
2. Wind the wire upward around the front brake cable until the wire is adjacent to the handlebar, allowing enough slack for free movement of the steering assembly cables.
3. Attach the bracket to the handlebar on either side of the stem. The bracket goes onto the handlebar with the wire toward the rider side of the bar. Use the appropriate rubber shim between the bracket and handlebar to provide a secure fit.

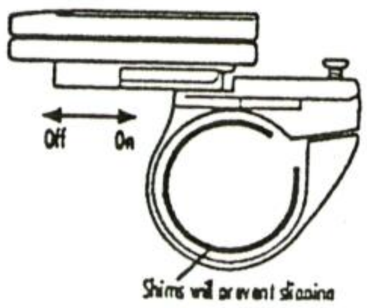

1995 Trek Radar Owners Manual

Congratulations and Thank you for purchasing the Trek Radar Bicycling Computer! The New Trek Radar with Workout Window represents the latest in Bicycle computer technology and concept. The Workout Window feature can greatly enhance the riding experience of any cyclist, whether they are a recreational rider or a top notch racer. The Radar with Workout Window may actually change the way you ride your bicycle! Please read this instruction manual carefully and save this manual for future reference.

Precautions

Remember to watch the road while riding. Watching your bicycle computer makes it difficult to see upcoming obstacles. Awareness of potential road, trail, or traffic problems should be your main concern.

Cycling Functions

1. Current Speed
2. Trip Timer
3. Trip Distance
4. Average Speed
5. Odometer
6. Maximum Speed
7. 12 Hour Clock
8. Temperature
9. Workout Window
10. Automatic Start/Stop

Additional Features

- Triple line display with high resolution LCD
- Waterproof
- Settable odometer
- Programmable for two different wheel settings with on screen wheel size indicator
- Auto shut off energy saving feature
- Posi-click buttons
- User friendly format

Parts List(w/pictures)



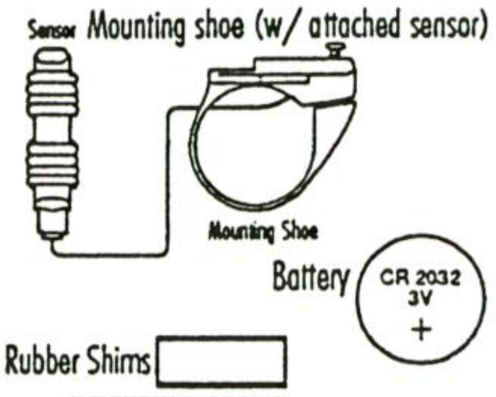

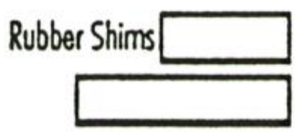

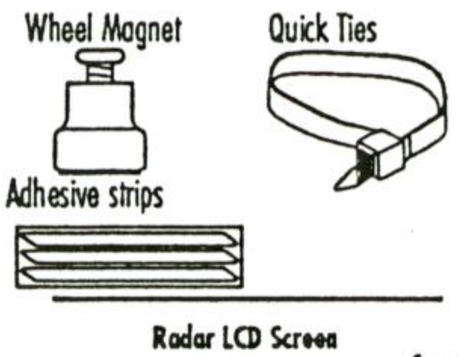

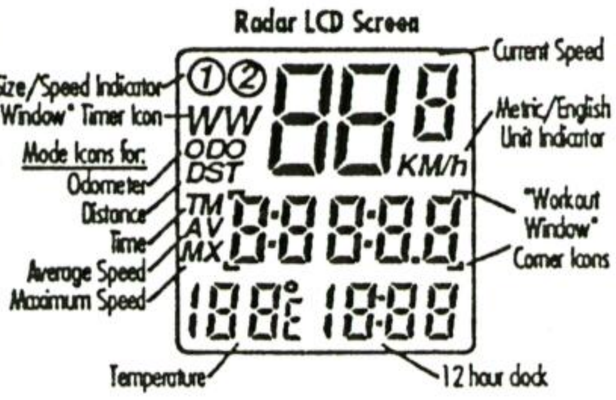

Attaching the Computer to the Bracket



The Trek Radar Computer attaches to the mounting bracket by sliding the unit onto the bracket from the back until it snaps firmly into position. To remove the computer from the bracket, place your thumb against the back of the mounting bracket and pull the computer toward you with your index finger.

Computer Set Up

Battery Installation

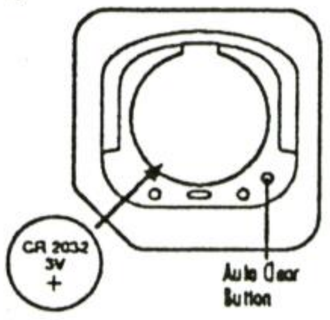

1. Remove the battery cover from the back side of the computer using a narrow flat blade screwdriver.
2. Install the battery so that the positive "+" side of the battery is visible, and replace the battery cover.

Programming Units of Measure

1. After battery installation, turn the computer face up. The display should show either the M/h icon, for miles per hour, or the KM/h icon, for kilometers per hour. (Note: If the display is erratic, press the A/C button on the backside of the computer to reset.)
2. Press and click the **LEFT** button to choose either M/h or KM/h.
3. Press and click the **RIGHT** button to lock in your choice and advance to the wheel size setting mode.

Wheel Size Setting

The wheel size setting number is equal to the distance, in millimeters, that your front wheel travels during one complete revolution. Each time the wheel magnet passes the sensor unit on your fork, the sensor sends an impulse to the computer telling it that your wheel has completed one revolution. The computer calculates this distance vs. time to give you accurate readings for the various modes. The Trek Radar can store two wheel sizes in memory to eliminate reprogramming when you switch bikes or tires. Additional sensor and bracket kits are available to allow you to use the Radar on a second bicycle.

Determining Wheel Size Setting

There are three methods for determining the wheel size setting. For the most accurate computer readings, it is best to measure the actual distance that your wheel travels in one complete revolution. This method is called a **wheel roll out.**

Method One: Wheel Roll Out

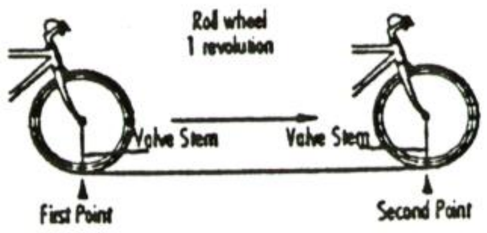

- Perform the wheel roll out on a hard, flat, smooth surface such as a garage or basement floor.
- Make sure your tires are properly inflated.

1. Position your bike so that the valve stem of the front wheel is at its bottom most position. Mark the spot on the floor directly under the center of the valve stem using a piece of tape or chalk.
2. Roll the bicycle forward in a straight line, while putting downward pressure on the handlebars to simulate rider weight. When the wheel has completed one revolution and the valve stem is at its bottom position, mark the floor directly under the center of the valve stem with tape or chalk. Measure the distance between the two marks in millimeters. (Note: Conversion of in. to mm. is 1 in.=25.4 mm.) This is your wheel setting number. You can repeat this procedure and average your results. We recommend that you record your wheel setting numbers here for future reference.

_____

_____

Method Two:

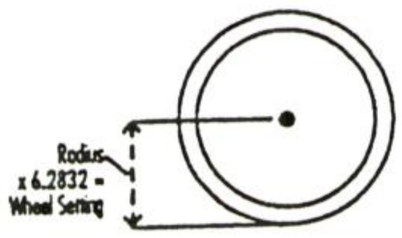

Measure wheel radius (including tire) in mm and multiply by 6.2832=Wheel setting number.

Method Three:

Refer to the following chart and input the number that corresponds to your tire size. (NOTE: Actual size of two similarly marked tires from different manufacturers can vary significantly, making this method the least accurate.)

Wheel Size Reference Chart

Wheel/Tire Size	Wheel Size Setting in mm
16"	1300
20" x 1.75	1600
24" x 1.95	1920
26" x 1.5	2030
26" x 1.75	2050
26" x 1.9	2080
26" x 2.0	2090
26" x 2.2	2100
700 x 20C	2090
700 x 23C	2100
700 x 25C	2110
700 x 28C	2140
700 x 32C	2160
700 x 35C	2175
700 x 38C	2180
700 x 40C	2190
27 x 1"	2136
27 x 1 1/4"	2155

Inputting Wheel Setting Numbers

After inserting the battery and choosing M/h or KM/h, your computer will display 2124 with the 4 digit flashing. (Note: A ① will appear in the upper left corner of the screen to designate wheel setting number one.)

1. Press and click the **LEFT** button to increase the flashing number by one or hold the button down for rapid advance.
2. Press and click the **RIGHT** button to lock in your choice and advance to the next flashing digit.
3. Repeat this procedure until all four digits are adjusted. After adjusting the final digit, press and hold the **RIGHT** button for about two seconds or until the screen displays...

Second Wheel Setting Number

1. The computer will display 2054 with the 4 digit flashing. (Note: A ② will appear in the upper left corner of the screen to designate wheel setting number two.) Adjust the digits using the above procedure until all four digits are adjusted.
2. Press and click the **RIGHT** button to advance to the odometer setting.

Settable Odometer Feature

After you complete input of the wheel setting number, the computer will display the current odometer reading with the last digit on the the right flashing. You can manually set your odometer to transfer mileage from another computer or to re-input mileage lost because of a battery change.

1. Press and click the **LEFT** button to increase the flashing digit by one or hold the button down for rapid advance.
2. Press and click the **RIGHT** button to lock in your choice and advance to the next flashing digit.
3. Repeat this procedure until all digits are adjusted. Press and click the **RIGHT** button to advance to normal operating mode. (Note: If you do not need to change either wheel input number or the odometer reading, press and hold the right button down for five seconds to bypass the setting mode and advance to normal operating mode.)

Resetting The Wheel Input Number or Odometer

1. In any mode press and hold **BOTH** buttons down for about four seconds or until the M/h or KM/h symbol flashes.
2. Refer to the computer set up procedure above for setting the Wheel Input Number or the Odometer.

Switching Wheel Sizes

After computer set up, the computer will use the second wheel size setting for calculation. The current wheel size being used is designated by a ② in the upper left corner of the LCD. To change from one wheel size to the other, in any mode except ODO;

1. Press and hold the **LEFT** button for 3-4 seconds or until the wheel setting input number is displayed on the middle line. A corresponding ① or ② will display in the upper left corner of the LCD.

2. Press and click the **LEFT** button to change to the desired wheel size setting.
3. Press and click the **RIGHT** button to return to normal operating mode. The wheel size being used for calculation will be displayed by a ① or ② in the upper left corner of the LCD.

Clock Setting

1. Press and click the **RIGHT** button in normal operating mode until the **ODO** mode appears.
2. Press and hold the **LEFT** button down about 2 seconds or until a flashing 12 appears.
3. Press and click the **LEFT** button to increase the flashing hour digits by one or hold for rapid advance.
4. Press and click the **RIGHT** button to lock in your choice and advance to the flashing minute digits.
5. Repeat the above procedure until all digits are adjusted, then press and click the **RIGHT** button to return to normal operating mode.

Testing the Computer Function

After bracket installation, computer set up, and computer installation, you can check for proper computer function by lifting the front of the bike and spinning the front wheel. If the computer registers a speed reading, then the set up is correct. If no speed readout appears, recheck sensor/magnet alignment for proper position. If other problems occur, refer to the troubleshooting guide at the end of this manual.

Computer Displays And Functions in Regular Operating Mode

AUTO Start/Stop

The Trek Radar will automatically turn on and record data, in regular operating mode, whenever the wheel sensor is activated by wheel rotation. The computer will automatically stop recording data when the wheel stops rotating.

Screen 1



Upper Display= **Current speed** in M/h or KM/h Display range of 3-99.9 M/h OR 4.5-122 KM/h. Speed resolution to .5 M/h or KM/h.

Middle Display=Auto trip timer, indicated by the **TM** icon. The ① or ② wheel size symbol blinks on and off when the timer is running. Elapsed time automatically starts when the wheel rotates and stops when the wheel stops. Records up to 9:59:59 and recycles to 0:00:00.

Lower display=Temperature on the left indicated in degree Fahrenheit with a range of 14 F. to 140 F. or degree Celsius with a range of -10 C to 60 C. (Note: Temp. will be displayed in Fahrenheit when computer is calculating M/h and Celsius when the computer is calculating KM/h.)

Time on the right in 12 hr. format indicated by a flashing colon between the hour and minute digits.

Press and click **RIGHT** button to advance to

Screen 2



Upper Display= **Current Speed**

Middle Display= **Trip Distance** indicated by the DST icon. Automatically records trip distance in increments of 0.1 miles or kilometers whenever the wheel rotates. Records up to 999.9 Miles or kilometers and then recycles to zero.

Lower display=Temperature and Time.

Press and click **RIGHT** button to advance to

Screen 3



Upper Display= **Current speed**

Middle Display= **Average speed** indicated by the **AV** icon. Automatically calculates average speed, in increments of 0.1 M/h or KM/h, whenever the wheel is rotating. Average speed can be calculated for up to 25 hrs and then it automatically recycles to zero.

Lower display=Temperature and Time.

Press and click **RIGHT** button to advance to

Screen 4



Upper Display= **Current speed**

Middle Display= **Maximum speed** indicated by the **MX** icon. Automatically records maximum speed up to 99.9 M/h or 122 KM/h. A new maximum speed must be maintained for over two seconds to register. Resolution to 0.1 M/h or KM/h.

Lower Display=Temperature and Time.

Press and click **RIGHT** button to advance to

Screen 5



Upper Display= **Current speed**

Middle Display= **Odometer** indicated by the **ODO** icon. Automatically records distance, in increments of 1.0 miles or kilometers, whenever the wheel is rotating. Records up to 99999 miles or kilometers and then automatically recycles to zero.

Lower Display=Temperature and Time.

Press and click **RIGHT** button to advance to **Screen 1**

Resetting Cycle Functions to Zero

To reset the computer values for the regular operation mode values of **TM, DST, AV, AND MX**;

- In any mode except **ODO**, press and hold **BOTH** the right and left buttons simultaneously for about 1 second. The display will flash and reset these values to zero. (Note: Caution - Holding both buttons down for more than 3-4 seconds accesses the initial set up mode. If you accidentally access this mode by mistake, press and hold the right button for 5 seconds to return to normal operating mode.)

Workout Window Mode

Workout Window allows the user to accumulate a second separate set of data for **TM, DST, AV, and MX.** This data represents your performance during the workout portion or your ride. **Workout Window** is operated manually so the user can choose when to start and stop the accumulation of this second set of data. The data can be cleared at any time without affecting your cumulative data from the Radar's regular operating mode.

The revolutionary **Workout Window** feature was developed to make your riding experience...

- **Safer-** no need to compromise traffic laws to enhance your average speed. Ride safely through traffic knowing that you can start the Workout Window when you reach the open road.
- **Healthier-** no need to skip a proper warm up and cool down to enhance your average speed. Start your Workout Window after your warm up and stop it before your cool down.
- **More Enjoyable-** No need to accept a compromised average speed. The Workout Window can be a real motivator by showing you your true average speed when you have the "Hammer Down".
- **More Productive-** Use the Workout Window to track your performance while riding your favorite course, during intervals, time trials, or even sprints. Get the feedback you need without losing your cumulative riding data.

Accessing Workout Window



- Press and hold the **RIGHT** button for about 2 seconds. A "WW" icon will appear to the left of the current speed reading and the middle line will be "windowed" by the "¬" symbols. To return to normal operating mode, press and hold the **RIGHT** button for about 2 seconds or until display reverts to normal operating mode. You can toggle between normal operating mode and Workout Window mode using the above procedure, even while the Workout Window timer is on.

Starting and Stopping Workout Window Timer

The Workout Window timer is manually operated and can be started and stopped **only** while you are in Workout Window mode. Workout Window data for **TM, DST, AV,** and **MX** will record only when the timer is on.



1. To start the timer, press and click the left button. The "WW" icon will flash on and off when the Workout Window timer is running. If you toggle back to regular mode while the Workout Window timer is running, the flashing "WW" icon will continue to display to alert you that the timer is on. The "¬" window icons appear only while you are in the Workout Window mode.
2. To stop the timer, press and click the left button. The "WW" icon will stop flashing and Workout Window data will stop recording.

Viewing Workout Window Modes



- While in the Workout Window mode, press and click the **RIGHT** button to cycle through and view the Workout Window modes as follows; **TM, DST, AV,** and **MX.** You can view these modes whether the timer is off or on. The upper display line continues to show Current Speed and the lower display line continues to display Temperature and Time while you are in Workout Window.

Resetting the Workout Window Data to Zero

- While in the Workout Window mode, press and hold **BOTH** buttons simultaneously for about 1 sec. or until the display resets to zero. Clearing the Workout Window data will not affect the cumulative data in the regular operating mode. (Note: Clearing your cumulative data in regular mode also clears your Workout Window data.)

LCD Auto Shut Off

- The computer LCD display will automatically shut itself off after 5-6 minutes of non use. The temperature and clock function will continue to display during this shut down. The computer LCD will turn on automatically when one of the buttons is pressed or the wheel sensor is activated by wheel rotation.

Troubleshooting Guide

Problem	Solution
•No speedometer reading	°Check for proper magnet sensor alignment. Check computer to make sure it is snapped firmly into the bracket.
•Display Readout Fades	°Poor battery contact or dead battery - Remove the battery, check contacts or replace battery.
•Display shows irregular figures	°Press A/C button on the back of the unit to clear and restart the computer.
•MX display reads 99.5	°Clear modes by pressing BOTH buttons in regular mode for 1 second, check wheel magnet/sensor alignment.
•Slow display response	°Temperature outside of computer operating limits (32-120°F, 0-49°C)
•Black display	°Computer unit too hot or display exposed to direct sunlight for too long. Let the unit cool and it should return to normal.

Computer Warranty

Your Trek Radar Computer is guaranteed for 2 years against defects in workmanship or materials. If you experience problems, refer to the suggestions in the troubleshooting guide in this manual. If this does not solve your problem, please return the computer to your authorized Trek Dealer or send the computer postage paid to:

Trek Bicycle Corporation
Attn. Computer Warranty Dept.
801 W Madison Street
Waterloo, WI 53594 USA

TREK UK
Attn. Computer Warranty Dept.
15 Old Bridge Way
Bedfordshire, SG17 5HQ ENGLAND

Please include the following:

1. The complete computer (wiring, etc.)
2. A copy of your sales receipt
3. A brief explanation of the problem
4. Your return address

For 2 years from the date of purchase, a replacement computer of the same model will be sent to you postage paid by Trek Bicycle Corporation.