

THOR KITCHEN®

INSTALLATION INSTRUCTIONS

GAS TYPE CONVERSION KIT

NGKSRG2401 | LPKSRG2401
NGKSRG3001 | LPKSRG3001
NGKSRG3601 | LPKSRG3601

REV.102026

GAS TYPE CONVERSION KIT

NGKSRG2401 | LPKSRG2401
NGKSRG3001 | LPKSRG3001
NGKSRG3601 | LPKSRG3601

THOR KITCHEN®

CONTENTS

Part 1 — General Safety Instructions 4

Part 2 — Burner and Oven Orifice Sizes 6

Part 3 — Natural Gas to Liquid Propane Conversion 9

Part 4 — Liquid Propane to Natural Gas Conversion 13

PART 1 — GENERAL SAFETY INSTRUCTIONS

⚠ WARNING

Installation of this conversion kit must be performed by a qualified service agency. The work shall comply with the manufacturer's instructions, as well as all applicable codes and requirements set by the authority having jurisdiction. Failure to strictly follow the instructions contained herein may lead to fire, explosion, or carbon monoxide generation, which can cause property damage, personal injury or fatalities. The qualified service agency bears responsibility for the correct installation of this kit. The installation is not deemed proper and complete until the operation of the converted appliance has been verified in accordance with the manufacturer's instructions provided with the kit.

⚠ CAUTION: Shut off the main gas supply to the appliance before disconnecting the electrical power and proceeding with the conversion.

⚠ WARNING — ELECTRICAL SHOCK HAZARD

Disconnect electrical power to the appliance before servicing. Failure to do so may result in death, fire, or electrical shock.

Conversion Kit Application

SRG series ranges are mass-produced in two factory gas configurations: models SRG2401, SRG3001, and SRG3601 are configured for natural gas (NG), while models SRG2401LP, SRG3001LP, and SRG3601LP are configured for liquid propane (LP). If the gas type available at the installation site differs from the factory configuration, convert the appliance using the matching conversion kit below — this allows flexible use in either gas scenario:

Factory Model (as Shipped)	Factory Gas Type	Convert To	Conversion Kit
SRG2401 (24")	NG	LP	LPKSRG2401
SRG2401LP (24")	LP	NG	NGKSRG2401
SRG3001 (30")	NG	LP	LPKSRG3001
SRG3001LP (30")	LP	NG	NGKSRG3001
SRG3601 (36")	NG	LP	LPKSRG3601
SRG3601LP (36")	LP	NG	NGKSRG3601

PART 1 — GENERAL SAFETY INSTRUCTIONS

Gas Pressure Specifications

The maximum gas supply pressure, test pressure and the supplied pressure regulator setting of the gas appliance supplied are as follows:

	LP (Liquid Propane) in wc	NG (Natural gas) in wc
Maximum gas supply pressure	13.0	10.0
Test pressure	≥ 11.0	≥ 6.0
Appliance pressure regulator setting for outlet pressure	10.0	5.0

Tools Required

-7 mm nut driver or socket wrench (cooktop and upper oven orifices)

-10 mm socket wrench (lower oven orifice)

-Phillips-head screwdriver -Small flat-blade screwdriver (burner valve bypass screws)

-Properly sized pipe wrench (regulator access cap)

-Liquid leak detector or soap-and-water solution (leak test — never uses an open flame)

General Precautions

-This conversion must be completed before installing the anti-tip device.

-Save the orifices removed from the appliance for future use.

-Do not force or over-tighten orifices; doing so may damage the burner base and affect the flame.

-Take care when removing and replacing gas components. Support components properly to prevent damage.

-The pressure regulator and cap are pre-installed on the unit. Any additional gas connection fittings shown in the illustrations are not supplied with the kit and must be obtained by the customer for installation by a qualified installer.

PART 2 — BURNER AND OVEN ORIFICE SIZES

IMPORTANT: Install the correct orifice in each exact location shown in the burner layout diagrams and tables below. Verify each orifice label before installation. Orifice sizes are given in millimeters (mm).

SRG2401/LP (24")

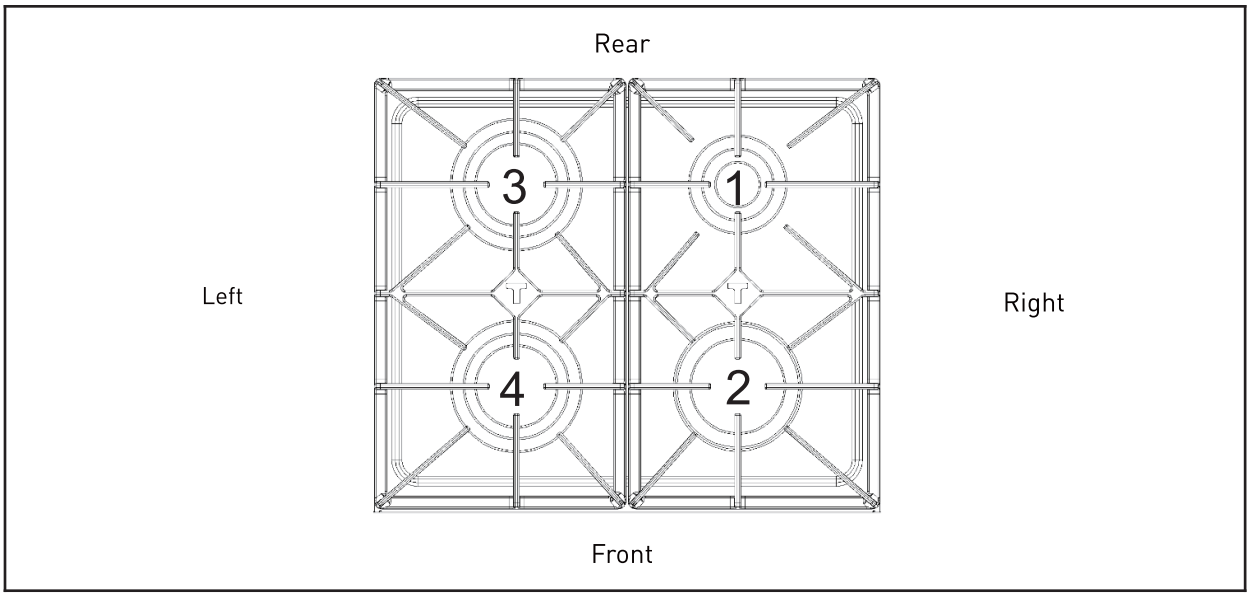

NG configuration			
Burner location		BTU	Orifice size (mm)
1	Rear right	3500	0.85
2	Front right	18000	1.97
3	Rear left	9000	1.36
4	Front left	9000	1.36
-	Broiler	10000	1.40
-	Oven	12000	1.50

LP configuration			
Burner location		BTU	Orifice size (mm)
1	Rear right	3500	0.58
2	Front right	18000	1.28
3	Rear left	9000	0.91
4	Front left	9000	0.91
-	Broiler	10000	0.90
-	Oven	12000	1.01

PART 2 — BURNER AND OVEN ORIFICE SIZES

SRG3001/LP (30")

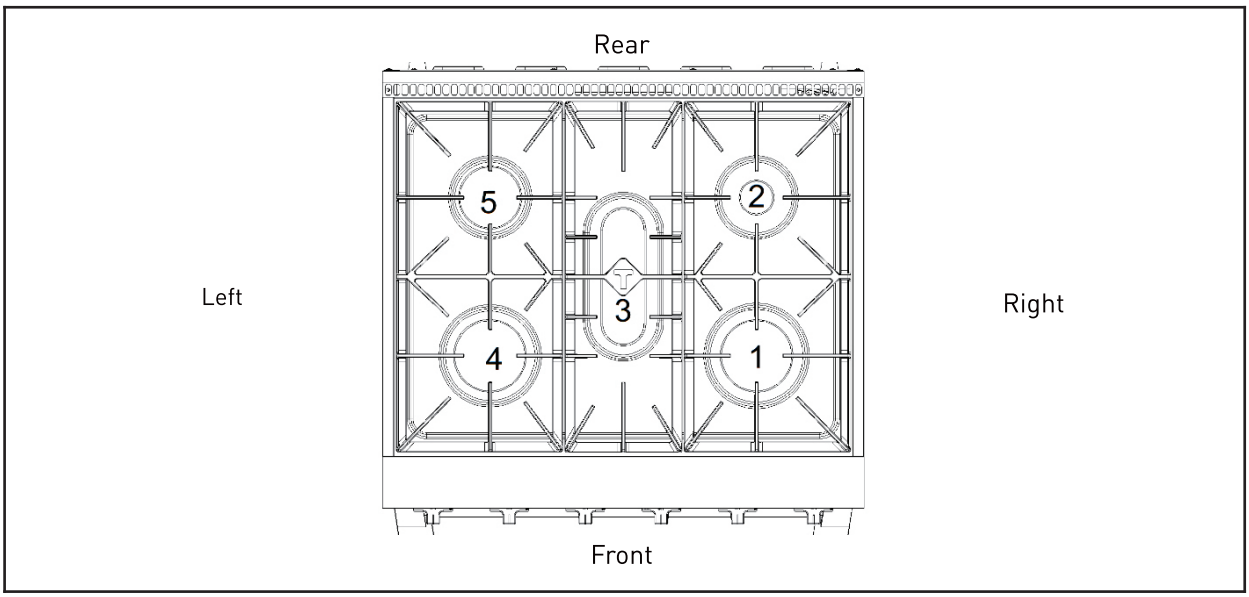

NG configuration			
Burner location		BTU	Orifice size (mm)
1	Front right	18000	2.01
2	Rear right	3500	0.83
3	Oval	9000	1.32
4	Front left	18000	2.01
5	Rear left	12000	1.57
-	Broiler	13500	1.69
-	Oven	18500	2.02

LP configuration			
Burner location		BTU	Orifice size (mm)
1	Front right	18000	1.21
2	Rear right	3500	0.54
3	Oval	9000	0.92
4	Front left	18000	1.21
5	Rear left	12000	1.03
-	Broiler	13500	1.10
-	Oven	18500	1.28

PART 2 — BURNER AND OVEN ORIFICE SIZES

SRG3601/LP (36")

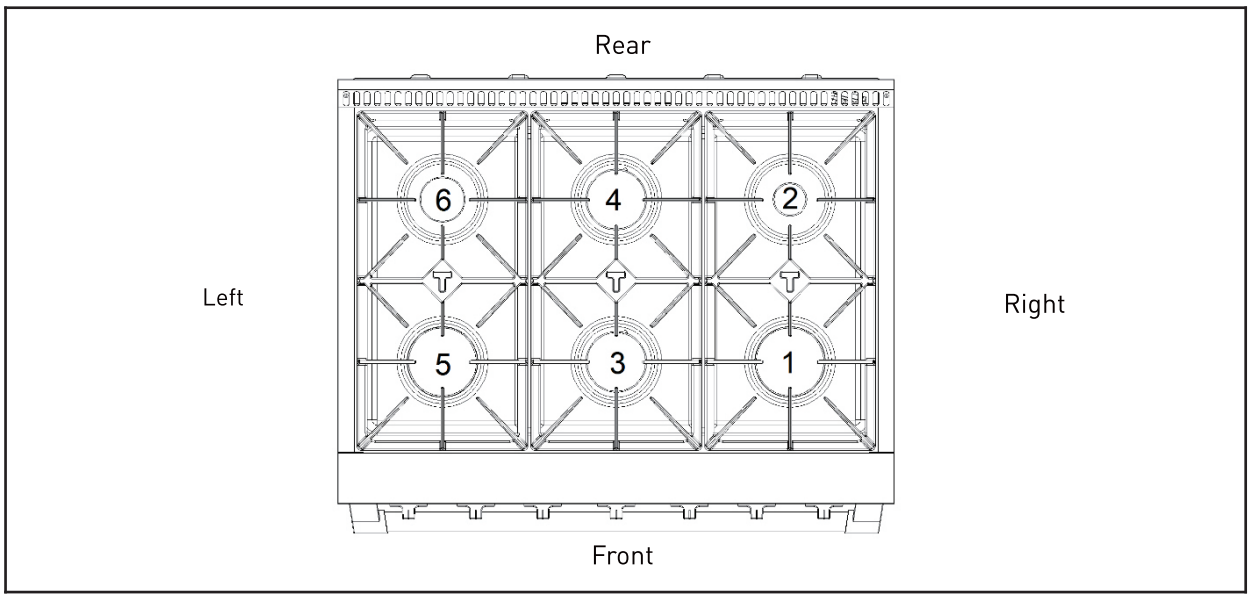

NG configuration			
Burner location		BTU	Orifice size (mm)
1	Front right	18000	1.97
2	Rear right	3500	0.85
3	Front middle	12000	1.57
4	Rear middle	12000	1.57
5	Front left	18000	1.97
6	Rear left	12000	1.57
-	Broiler	13500	1.69
-	Oven	18500	2.02

LP configuration			
Burner location		BTU	Orifice size (mm)
1	Front right	18000	1.28
2	Rear right	3500	0.58
3	Front middle	12000	1.03
4	Rear middle	12000	1.03
5	Front left	18000	1.28
6	Rear left	12000	1.03
-	Broiler	13500	1.10
-	Oven	18500	1.28

PART 3 — NATURAL GAS TO LIQUID PROPANE CONVERSION

Use conversion kit LPKSRG2401, LPKSRG3001, or LPKSRG3601 matching the appliance model. Refer to Part 2 for the correct LP orifice sizes and locations.

Step 1 — Prepare the appliance

1.Shut off the main gas supply to the appliance.

2.Disconnect electrical power to the appliance.

3.Close the manual shut-off valve (see Figure 1). Purge air from the gas line by pressing and turning each range knob several times to ensure no gas remains in the system.

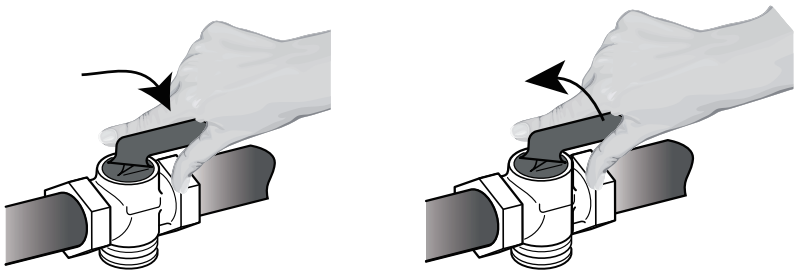

Figure 1 — Manual shut-off valve: open and closed positions

Step 2 — Adjust the pressure regulator

1.Unscrew the regulator access cap by hand or with a properly sized pipe wrench.

2.Remove the regulator pin by pulling it out (see Figure 2).

3.Reverse the regulator pin and reinsert it into the regulator cap with the LP side facing outward (see Figure 2).

4.Screw the regulator access cap back into the regulator and reconnect it to the nipple and flare union. Do not over-tighten.

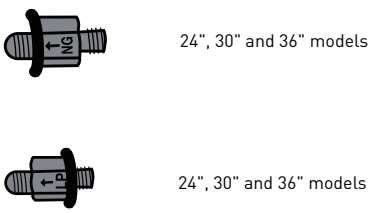

Figure 2 — Regulator pin: NG and LP ; 24″ , 30″ and 36″ models

PART 3 — NATURAL GAS TO LIQUID PROPANE CONVERSION

Step 3 — Adjust the burner valve bypass screws

1.Using a small flat-blade screwdriver, turn each burner valve bypass screw clockwise until fully seated (see Figure 3).

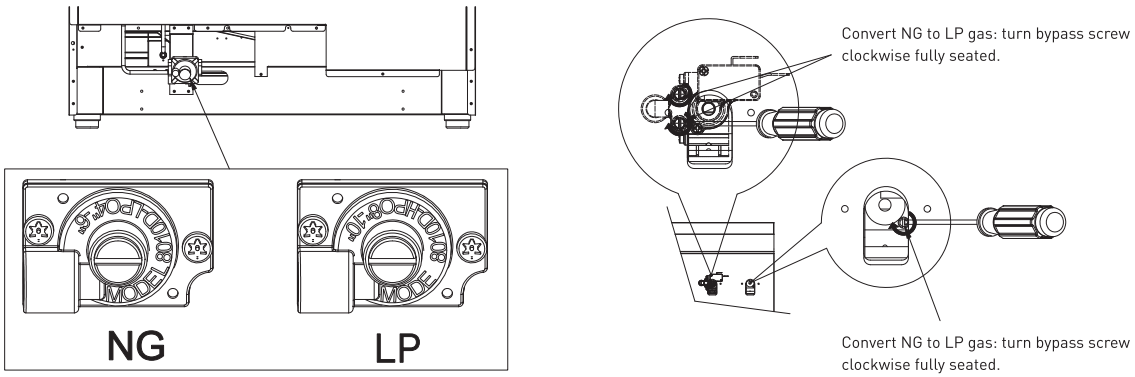

Figure 3 — Burner valve and bypass screw adjustment (NG → LP: clockwise, fully seated)

Step 4 — Replace the cooktop burner orifies

1.Remove the burner grates, burner caps, and burner bases.

2.Using a 7 mm nut driver or wrench, remove the existing natural gas orifices (see Figure 4). Carefully read each replacement orifice label and install the correct LP orifice in the exact location specified in Part 2. Do not force or over-tighten the orifices.

3.Save the removed natural gas orifices for future use.

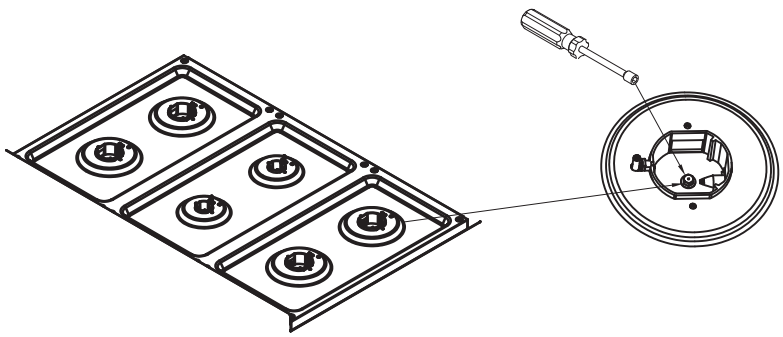

Figure 4 — Removing and installing a cooktop burner orifice

Step 5 — Replace the upper oven (broiler) orifice

1.Open the oven door and remove the oven racks. Remove the bottom drip pan by lifting up from each front corner and sliding it out, taking care not to damage the lower oven burner.

2.Using a Phillips screwdriver, remove the broiler burner screws. Carefully detach the burner vent from the oven's back wall to access the orifice.

PART 3 — NATURAL GAS TO LIQUID PROPANE CONVERSION

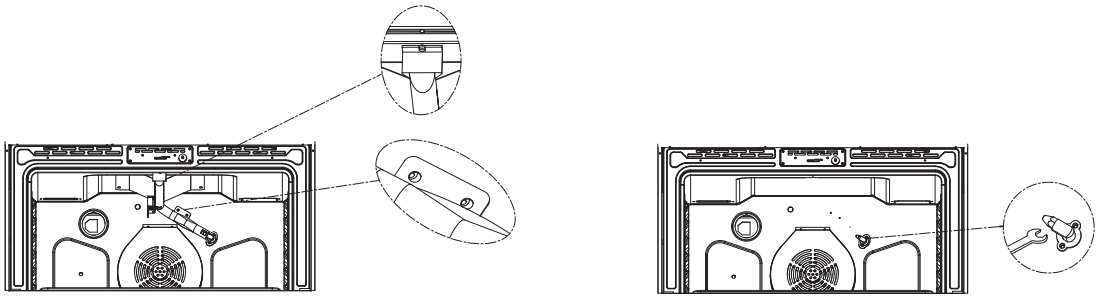

Figure 5 — Replace the upper oven orifice

3.Using a 7 mm socket wrench, remove the natural gas orifice and install the LP orifice. Do not over-tighten. Reposition the burner vent over the new orifice and resecure the burner with the screws removed earlier, taking care not to damage the wiring.

Step 6 — Replace the lower oven (bake) orifice

1.Remove the screws at the rear of the lower oven burner. Carefully lift the burner up and back into the oven cavity to access the orifice at the front of the burner.

2.Using a 10 mm socket wrench, remove the natural gas orifice and install the LP orifice. Do not over-tighten.

3.Reposition the burner and resecure the rear screws.

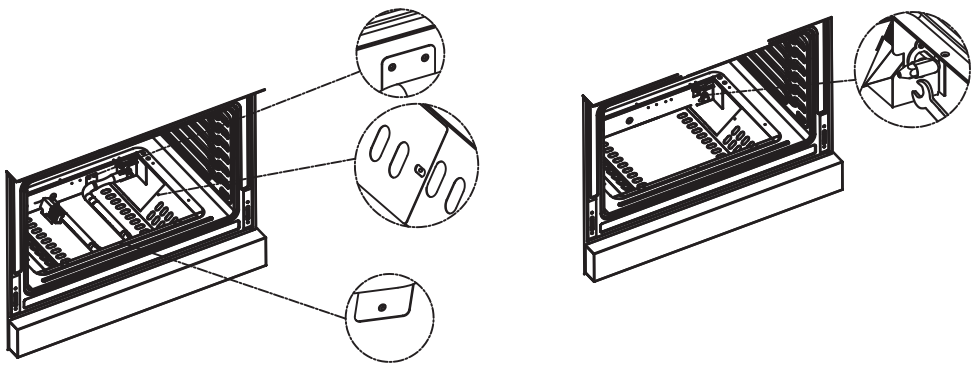

Figure 6 — Replace the lower oven orifice

PART 3 — NATURAL GAS TO LIQUID PROPANE CONVERSION

Step 7 — Reassemble the appliance

1.Replace the bottom drip pan and the oven racks in the reverse order of removal.

Step 8 — Apply the conversion label

1.Affix the LP conversion label supplied with the kit next to the SGS (rating) label.

Step 9 — Verify the conversion

1.Leak test: Apply a soap-and-water solution (or an approved liquid leak detector) to all gas connections and check for bubbles. Never use an open flame to check for gas leaks.

2.Pressure check: Verify the regulator outlet pressure is 10″ w.c. (2.5 kPa) for liquid propane. To check: remove the burner cap and burner base, then attach the test point adapter to the orifice holder.

3.Flame check: Light each cooktop burner and confirm a stable blue flame. Operate the oven to confirm normal heating.

PART 4 — LIQUID PROPANE TO NATURAL GAS CONVERSION

Use conversion kit NGKSRG2401, NGKSRG3001, or NGKSRG3601 matching the appliance model. Refer to Part 2 for the correct NG orifice sizes and locations.

Step 1 — Prepare the appliance

1.Shut off the main gas supply to the appliance.

2.Disconnect electrical power to the appliance.

3.Close the manual shut-off valve (see Figure 7). Purge air from the gas line by pressing and turning each range knob several times to ensure no gas remains in the system.

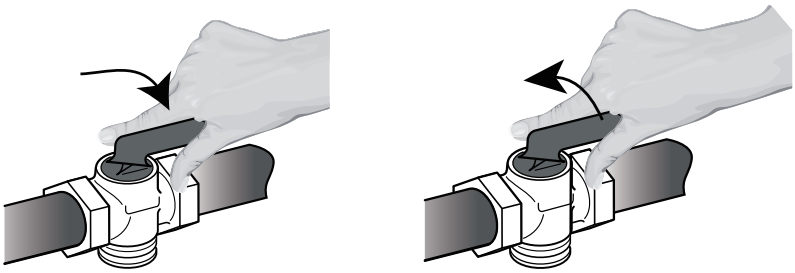

Figure 7 — Manual shut-off valve: open and closed positions

Step 2 — Adjust the pressure regulator

1.Unscrew the regulator access cap by hand or with a properly sized pipe wrench.

2.Remove the regulator pin by pulling it out (see Figure 8).

3.Reverse the regulator pin and reinsert it into the regulator cap with the NG side facing outward (see Figure 8).

4.Screw the regulator access cap back into the regulator and reconnect it to the nipple and flare union. Do not over-tighten.

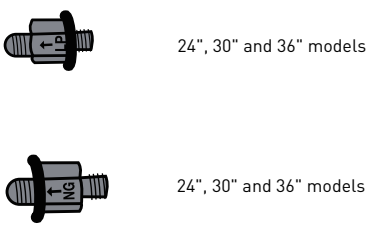

Figure 8 — Regulator pin: NG and LP ; 24″ , 30″ and 36″ models

PART 4 — LIQUID PROPANE TO NATURAL GAS CONVERSION

Step 3 — Adjust the burner valve bypass screws

1.Using a small flat-blade screwdriver, turn each burner valve bypass screw counterclockwise until fully seated (see Figure 9).

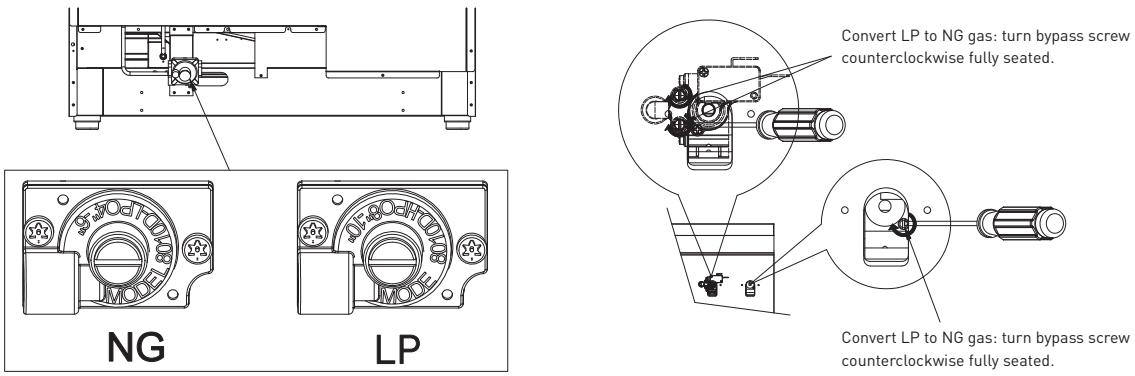

Figure 9 — Burner valve and bypass screw adjustment (LP → NG: counterclockwise, fully seated)

Step 4 — Replace the cooktop burner orifies

1.Remove the burner grates, burner caps, and burner bases.

2.Using a 7 mm nut driver or wrench, remove the existing liquid propane orifices (see Figure 10). Carefully read each replacement orifice label and install the correct NG orifice in the exact location specified in Part 2. Do not force or over-tighten the orifices.

3.Save the removed liquid propane orifices for future use.

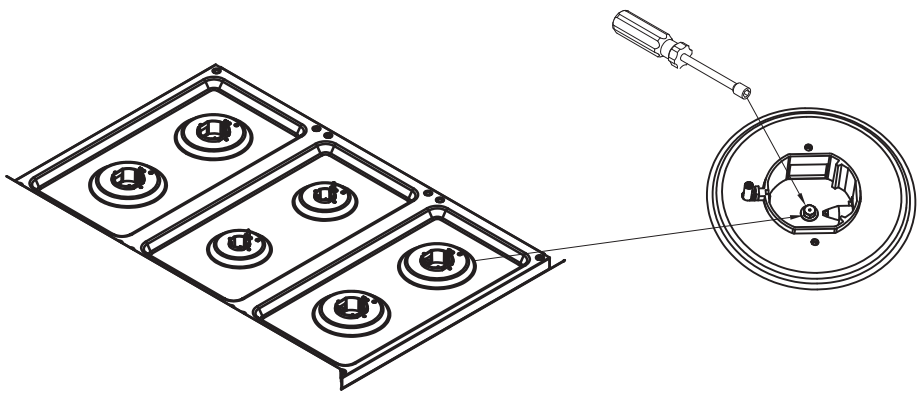

Figure 10— Removing and installing a cooktop burner orifice

PART 4 — LIQUID PROPANE TO NATURAL GAS CONVERSION

Step 5 — Replace the upper oven (broiler) orifice

1.Open the oven door and remove the oven racks. Remove the bottom drip pan by lifting up from each front corner and sliding it out, taking care not to damage the lower oven burner.

2.Remove the broil burner screws with a Phillips screwdriver. Carefully detach the burner vent from the back wall of the oven to access the orifice.

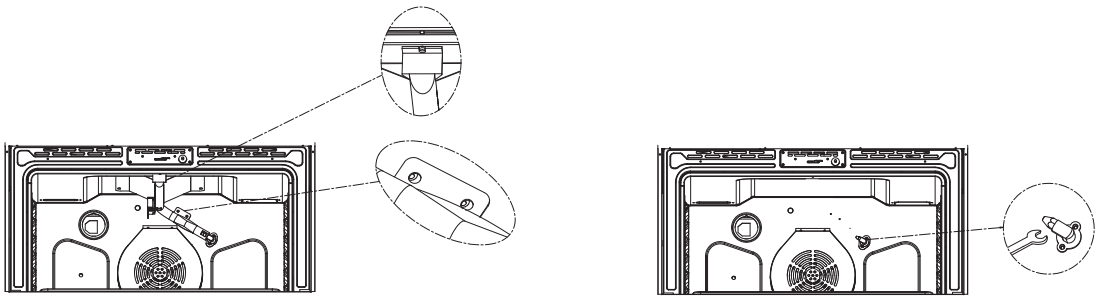

Figure 11 — Replace the upper oven orifice

3.Using a 7 mm socket wrench, remove the liquid propane orifice and install the NG orifice. Do not over-tighten. Reposition the burner vent over the new orifice and resecure the burner with the screws removed earlier, taking care not to damage the wiring.

Step 6 — Replace the lower oven (bake) orifice

1.Remove the screws at the rear of the lower oven burner. Carefully lift the burner up and back into the oven cavity to access the orifice at the front of the burner.

2.Using a 10 mm socket wrench, remove the liquid propane orifice and install the NG orifice. Do not over-tighten.

3.Reposition the burner and resecure the rear screws.

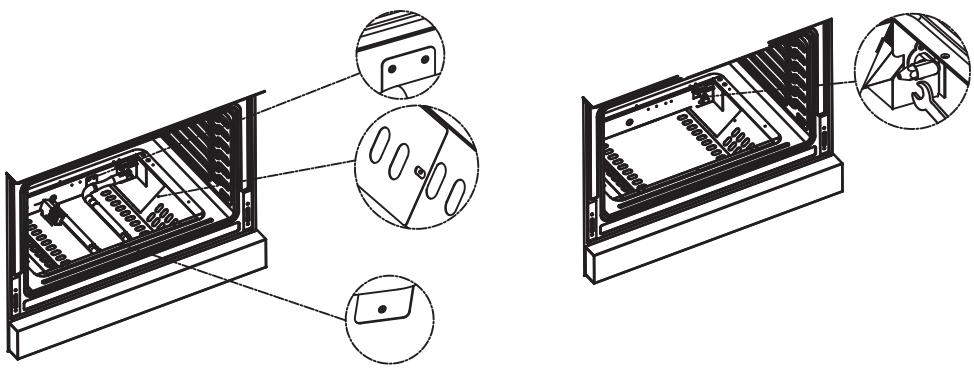

Figure 12— Replace the lower oven orifice

PART 4 — LIQUID PROPANE TO NATURAL GAS CONVERSION

Step 7 — Reassemble the appliance

1.Replace the bottom drip pan and the oven racks in the reverse order of removal.

Step 8 — Apply the conversion label

1.Affix the NG conversion label supplied with the kit next to the SGS (rating) label.

Step 9 — Verify the conversion

1.Leak test: Apply a soap-and-water solution (or an approved liquid leak detector) to all gas connections and check for bubbles. Never use an open flame to check for gas leaks.

2.Pressure check: Verify the regulator outlet pressure is 5″ w.c. (1.2 kPa) for natural gas. To check: remove the burner cap and burner base, then attach the test point adapter to the orifice holder.

3.Flame check: Light each cooktop burner and confirm a stable blue flame. Operate the oven to confirm normal heating.

We Stand Behind the Quality of Our Appliances.

Reliability and customer satisfaction are our top priorities. We offer a solid two-year warranty on both parts and labor. Enjoy professional-grade performance with the confidence that we've got you covered.

Warranty Registration Made Easy.

01 Scan the QR Code or visit thorkitchen.com/register-your-product.

02 Input your purchase and product information and select register.

03 That's it. You're all set. Enjoy!

WARRANTY

PARTS

Questions: service@thorinternational.com