User Guide

For United States

English

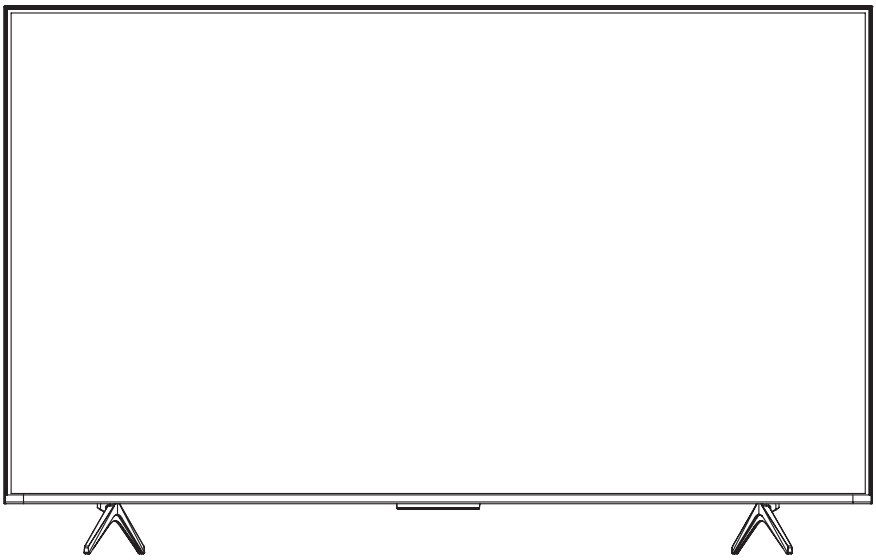

Amazon, Fire, and all related marks are trademarks of Amazon.com, Inc. or its affiliates. This device is not manufactured by Amazon.com, Inc. or any Amazon affiliate. Separate streaming subscriptions may be required. Certain services and features are subject to change or withdrawal at any time, may not be available in all areas and languages, or in 4K.

Illustrations in this guide are provided for reference only and may differ from actual product appearance. Product design and specifications may be changed without notice.

Contents

Important Information 3
Important Safety Instructions 4

Connections and setup

Before initial setup 6
Protect against power surges 6
Safety information 6
Avoid audio interference 6
Avoid direct light 6
Set up your new TV 8
What's in the box 8
To mount on a wall 9
To use the stand 10
To use the cable clips 11
Connect to the Internet 12
Network settings 12
Switch the TV on and off 13
Initial setup 13
Choose Your Language 13
Select TV Mode 13
Pair Your Remote with your TV 13
Connect to Your Network 13
Select Your Experience 14
Sign In with Your Amazon Account 14
Scan for TV channels 14

Basic TV operations

Accessing the Inputs menu 15
Accessing TV homepage 15
Using TV settings menu 15
General settings 16

Adjusting your TV

Inputs 17
Notifications 17
Amazon Account Sign in/up 17
Network 17
Display & Sounds 17

Applications 18
Equipment Control 18
Live TV 18
Controllers & Bluetooth Devices 19
Alexa 19
Preferences 19
Sleep Timer 20
Device & Software 20
Accessibility 20
Help 20

Other information

Troubleshooting 21
Broadcasting & Operating Environment 22
Battery CAUTION & Disposal Information 22
ELECTRONICS & PACKAGING RECYCLING INFORMATION 22
Legal Statement 23
TCL North America Limited Product Warranty 24

Important Information

CAUTION
RISK OF ELECTRIC SHOCK.
DO NOT OPEN.

Caution: To reduce the risk of electric shock, do not remove cover (or back). No user serviceable parts inside. Refer servicing to qualified service personnel.



This symbol indicates that this product incorporates double insulation between hazardous main voltage and user accessible parts. When servicing, use only identical replacement parts.



This symbol indicates that the fuse may be in the neutral, and that the mains shall be disconnected to de-energize the phase conductors.



This symbol indicates “dangerous voltage” inside the product that presents a risk of electric shock or personal injury.



This symbol indicates important instructions accompanying the product.

WARNING

To reduce the risk of fire or electric shock, do not expose this product to rain or moisture. This product should not be exposed to dripping or splashing. No objects filled with liquids, such as vases, should be placed on the apparatus.

The TV is unstable if it is not properly attached to the base or mounted to the wall. Please follow the base or wall mounting instructions provided in the User’s Guide to ensure your safety.

The batteries should not be exposed to excessive heat, such as prolonged direct sunlight, open flame, or fire of any kind. Refer to the identification/rating label located on the back panel of your product for its proper operating voltage.

Cable TV Installer: This reminder is provided to call your attention to Article 820-40 of the National Electrical Code (Section 54 of the Canadian Electrical Code, Part 1) which provides guidelines for proper grounding and, in particular, specifies that the cable ground should be connected to the grounding system of the building as close to the point of cable entry as practical.

Important: This television is a table model and is designed to sit on a firm, flat surface. Do not place the TV on soft carpeting or on a similar surface as this may cause the ventilation slots located on the bottom of the unit to be blocked and may result in reduced product lifespan from overheating To assure adequate ventilation for this product, maintain a spacing of one (1) inch from the top and side of the TV receiver and two (2) inches from the rear of the TV receiver and other surfaces.

Make sure the TV stand or base you use is of adequate size and strength to prevent the TV from being accidentally tipped over, pushed off, or pulled off. This may cause personal injury and/or damage the TV. Refer to the Important Safety Instructions on the next page.

The Power button ⏻ on this TV and your remote control puts the TV into a very low-power standby mode but will not completely turn the power off. In order to completely shut the power off, you will need to disconnect the power cord from the outlet. The mains plug/appliance coupler is used to completely turn off the device. If you prefer to completely turn off the device, you should install the TV in a manner that allows you to disconnect the power cord when desired.

Warning: Changes or modifications to this unit not expressly approved by the party responsible for compliance could void the user’s authority to operate the equipment. Keep the apparatus at least 8 inches away from the human body.

For the best viewing experience, remove the energy guide label from the TV front panel or TV screen before use.

Important Safety Instructions

1. Read these instructions.
2. Keep these instructions.
3. Heed all warnings.
4. Follow all instructions.
5. Do not use this apparatus near water.
6. Clean only with a dry cloth.
7. Do not block any ventilation openings. Install in accordance with the manufacturer's instructions.
8. Do not install near any heat sources such as radiators, heat registers, stoves, or other apparatus (including amplifiers) that produce heat.
9. Protect the power cord from being walked on or pinched particularly at plugs, convenience receptacles, and the point where they exit from the apparatus.
10. WARNING: Please refer the information on exterior bottom enclosure for electrical and safety information before installing or operating the apparatus.
11. WARNING: The main plug is used to disconnect the device and should remain readily operable.
12. When not in use, tie up the power cordset with a cable tie or with something similar. It should not be near sharp edges as it may cause abrasion of the power cordset. When put into use again, please make sure the power cordset is not damaged. If any damage is found, please use a replacement power cord specified by the manufacturer or that is identical to the original one.
13. No open flame sources, such as lit candles, should be placed on, under, or near the apparatus
14. Unplug this apparatus during lightning storms or when unused for long periods of time.
15. Only use attachments/accessories specified by the manufacturer.
16. Use only with the cart, stand, tripod, bracket, or table specified by the manufacturer, or sold with the apparatus. When a cart is used, use caution when moving the cart/apparatus combination to avoid any injury.
17. Refer all servicing to qualified service personnel. Servicing is required when the apparatus has been damaged in any way, such as power-supply cord or plug is damaged, liquid has been spilled or objects have fallen into the apparatus, the apparatus has been exposed to rain or moisture, does not operate normally, or has been dropped.
18. For safe operation of the apparatus, please follow these installation requirements:
    Keep at least 2 inches of ventilation space between the rear cover of the apparatus and the wall
    Keep at least 1 inch of ventilation space between the apparatus and all other surfaces. Do not allow any of the apparatus' ventilation openings to be blocked by objects that might obstruct them, such as newspapers, curtains, table-cloths or any other objects. Do not expose the apparatus to any external heat sources. Do not place any heat sources such as candles, lamps, etc. on the apparatus. Do not expose the device to high levels of humidity or to any possible sources of moisture. When disposing of used batteries from the remote control, consult local regulations regarding proper disposal.

19. If an outside antenna or cable system is connected to the product, be sure the antenna or cable system is grounded so as to provide some protection against voltage surges and built-up static charges. Section 810 of the National Electrical Code, ANSI/NFPA No. 70-2011 (Section 54 of Canadian Electrical Code, Part 1) provides information with respect to proper grounding of the mast and supporting structure, grounding of the lead in wire to an antenna-discharge unit, size of grounding conductors, location of antenna discharge unit, connection to grounding electrodes, and requirements for the grounding electrode.
    See following example:

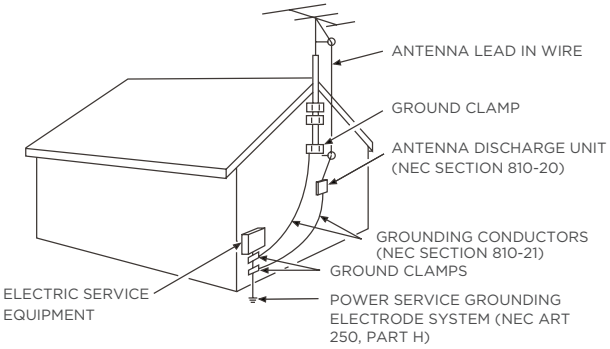

Connections and setup

Before initial setup

Protect against power surges

- Connect all components before you plug any power cords into the wall outlet or power strip.
- NEVER plug your TV into an outlet that is controlled by a wall switch.
- Turn off the TV before you connect or disconnect any cables.
- Make sure all antennas and cables are properly grounded. Refer to the Important Safety Instructions.

Safety information

- Prevent TV from overheating by placing in an area with good ventilation.
- Do not block ventilation holes on the TV. Position the TV so air can circulate freely on all sides.
- Do not stack objects on the TV.
- If you place the TV on a stand, make sure you allow adequate ventilation.
- If you connect an audio receiver or amplifier to the TV, place it on the top shelf so the heated air will not overheat the TV.

Avoid audio interference

- Position cables properly; insert each cable firmly into the designated jack.
- Route all cables down one side of the back of the TV instead of straight down the middle.
- If your antenna uses 300-ohm twin lead cables, do not coil the cables.
- Keep twin lead cables away from audio/video cables.

Avoid direct light

- Do not place the TV where sunlight or room lighting is directed toward the screen. Use soft or indirect lighting.



The terms HDMI, HDMI High-Definition Multimedia Interface, HDMI Trade Dress and the HDMI Logos are trademarks or registered trademarks of HDMI Licensing Administrator, Inc.



Dolby, Dolby Vision, Dolby Vision IQ, Dolby Atmos, Dolby Audio and the double-D symbol are trademarks of Dolby Laboratories Licensing Corporation. Manufactured under license from Dolby Laboratories. Confidential unpublished works. Copyright © 1992–2024 Dolby Laboratories. All rights reserved.



The Bluetooth® word mark and logos are registered trademarks owned by Bluetooth SIG, Inc. and any use of such marks by TTE Corporation is under license. Other trademarks and trade names are those of their respective owners.



Manufactured under license from DTS, Inc. and/or its affiliates. For patents, see https://xperi.com/dts-patents/. DTS, the DTS logo, DTS:X, the DTS:X logo, Virtual:X, and the DTS Virtual:X logo are trademarks or registered trademarks of DTS, Inc. and/or its affiliates in the U.S. and/or other countries. © DTS, Inc. and/or its affiliates. All rights reserved.



Manufactured under license from IMAX Corporation. IMAX® is a registered trademark of IMAX Corporation in the United States and/or other countries. For DTS patents, see http://patents.dts.com. Manufactured under license from DTS Licensing Limited. DTS and the DTS logo are registered trademarks or trademarks of DTS, Inc. in the United States and other countries. © 2020 DTS, Inc. ALL RIGHTS RESERVED.



Covered by one or more claims of the HEVC patents listed at patentlist.accessadvance.com.





Apple, AirPlay, Apple Home, and HomeKit are trademarks of Apple Inc., registered in the U.S. and other countries and regions.
Use of the Works with Apple badges means that an accessory has been designed to work specifically with the technology identified in the badges and has been certified by the developer to meet Apple performance standards.

FCC Information

This equipment has been tested and found to comply with the limits for a Class B digital device, pursuant to Part 15 of the FCC Rules. These limits are designed to provide reasonable protection against harmful interference in a residential installation. This equipment generates, uses, and can radiate radio frequency energy and, if not installed and used in accordance with the instructions, may cause harmful interference to radio communications. However, there is no guarantee that interference will not occur in a particular installation. If this equipment does cause harmful interference to radio or television reception, which can be determined by turning the equipment off and on, the user is encouraged to try to correct the interference by one or more of the following measures:

- Reorient or relocate the receiving antenna.
- Increase the separation between the equipment and receiver.
- Connect the equipment into an outlet on a circuit different from that to which the receiver is connected.
- Consult the dealer or an experienced radio/TV technician for help.

This Class B digital apparatus complies with Canadian ICES-003.

The series, include models (55/65/75/85QM64L)

This device complies with part 15 of the FCC Rules. Operation is subject to the following two conditions:

(1) This device may not cause harmful interference, and

(2) this device must accept any interference received, including interference that may cause undesired operation.

Supplier Name: TTE Technology, Inc. (dba TCL North America)

Supplier Address: 189 Technology Drive, Irvine, CA 92618, USA

Supplier phone number and internet contact information: 1-800-988-6041 support.tcl.com

Set up your new TV

Open the box and remove the TV and other items. Be careful, the TV may be heavy! We strongly recommend that at least two people unbox the TV.

Be sure to check all the foam packaging as the stands from some TV's are stored in the foam for protection.

Warning: To avoid the danger of suffocation, keep plastic packaging away from babies, children, and pets. Do not use packaging bags in cribs, beds, carriages, or playpens.

What's in the box



TCL TV

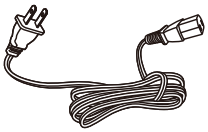

Power cable

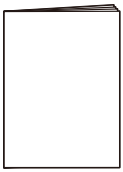

Quick Start Guide

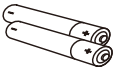

2 x AAA batteries for remote

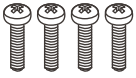

55"/65": M4x20 mm
75": M5x20 mm

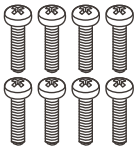

85": M5x16 mm

Stand screws



Cable clips

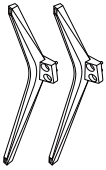

55"/65"/75"

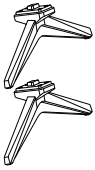

85"

TV stands

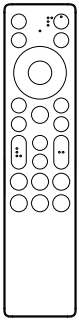

TV remote

To mount on a wall

Preparation must be done before mounting your TV on a wall.

Note: Do not place your TV in a location exposed to direct sunlight, heat, fire, or moisture. Exposure will damage the TV.

To mount your TV to the wall, purchase the one of the following VESA wall mounts:

- **55″ model** VESA 300x300, 4 M6x16 mm screws
- **65″ model** VESA 300x300, 2 M6x16 mm screws - top row, 2 M6x12 mm screws - bottom row
- **75″ model** VESA 300x300, 4 M6x16 mm screws
- **85″ model** VESA 600x400, 4 M8x20 mm screws

The VESA number is the horizontal and vertical measurement of the mounting holes. For example, 200 x 200 indicates that the mounting holes are spaced 200 mm horizontally and 200 mm vertically.

Follow the directions supplied with the wall mount to mount the TV to the wall.

Note: The wall mount bracket and the screws are not included.

Warning: This product should only be mounted by a professional installer.

Warning: **Never install or mount** this product to the ceiling with the screen side facing down. Installing or mounting this product to the ceiling or the underside of a structure or surface is hazardous and may result in personal injury and/or property damage.

1-1

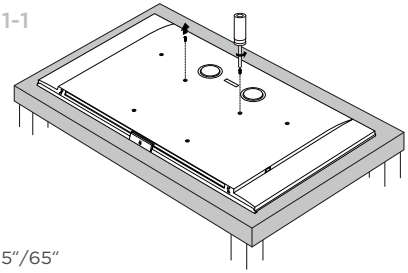

55″/65″

Place your TV on a soft, cushioned surface. Remove the 2 screws from the back of the TV and store in a safe place.

1-2

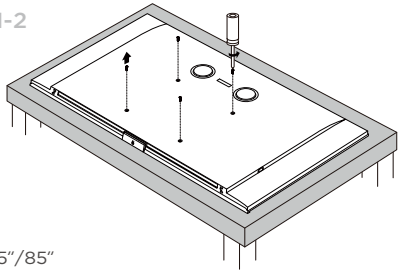

75″/85″

Place your TV on a soft, cushioned surface. Remove the 4 screws from the back of the TV and store in a safe place.

2

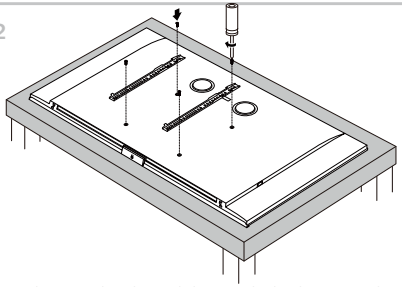

Screw the VESA bracket tightly onto the back cover with 4 VESA screws purchased with the wall mount separately.

3

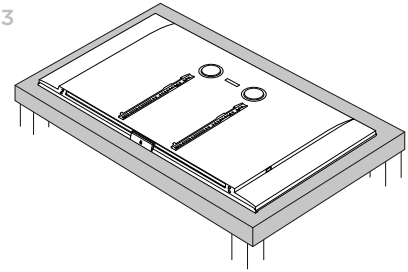

Follow the instructions that come with the wall mount to hang the TV on the wall.

To use the stand

Ready for the step-by-step? You're only minutes away from TV bliss!

Warning: To avoid the danger of suffocation, keep plastic packaging away from babies, children, and pets. Do not use packaging bags in cribs, beds, carriages, or playpens.

Remove your TV from the box. Be careful, it's heavy!

A — To prevent damage to the screen, carefully place your TV on a soft, cushioned surface.

B — Align the stands with the screw holes located on the TV. Secure the stands to the TV with the supplied stand screws.

Note: Make sure the installation direction of the stand is the same as illustrated. Please remove the protective film after installation.

55″/65″/75″

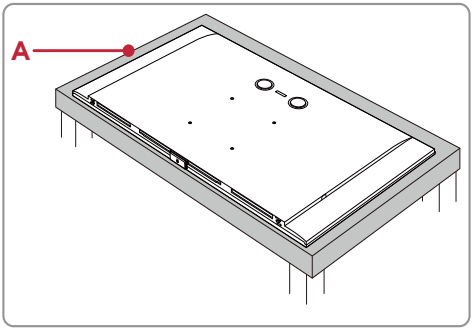

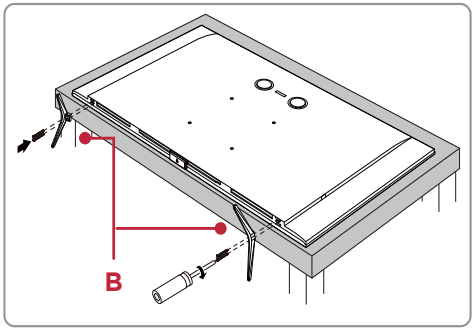

65″/75″

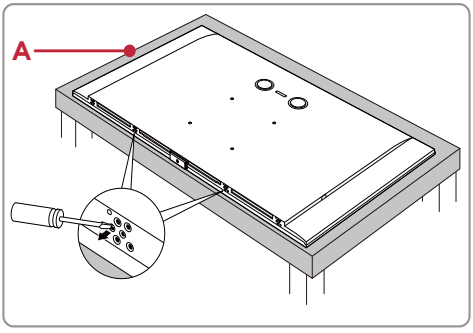

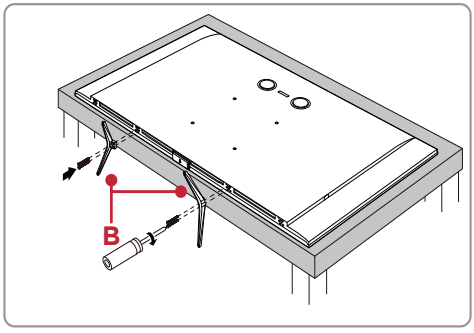

Screws
(55″/65″: M4x20 mm 75″: M5x20 mm)

85″

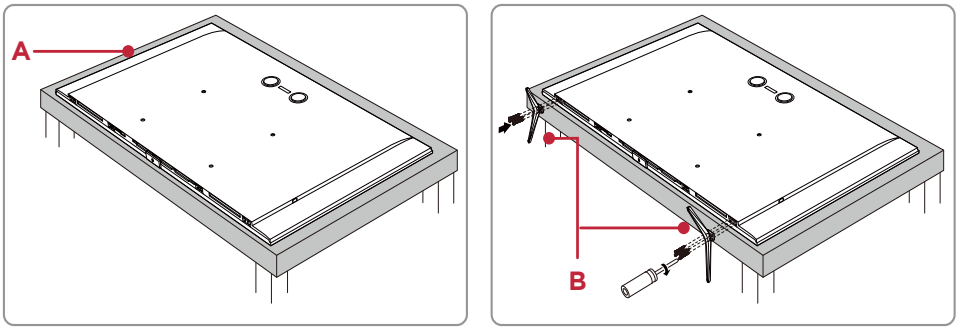

85″

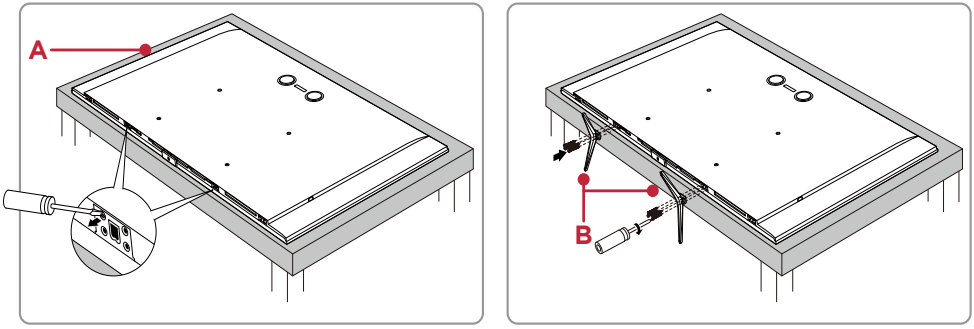

Screws
(85″: M5x16 mm)

To use the cable clips

Insert the cable clips into the back of the TV and route the cables as illustrated.

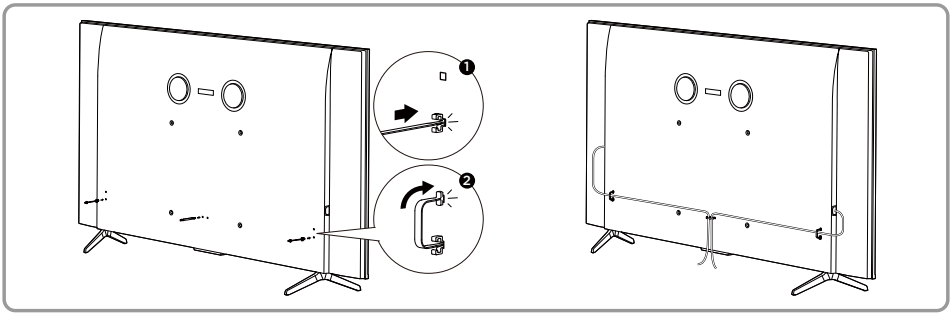

Connect to the Internet

The following instructions are just the usual ways to connect your TV to the wired or wireless network. The connection method may be different depending on your actual network configuration. If you have any questions about your home network, please refer to your Internet service provider.

Wired connection

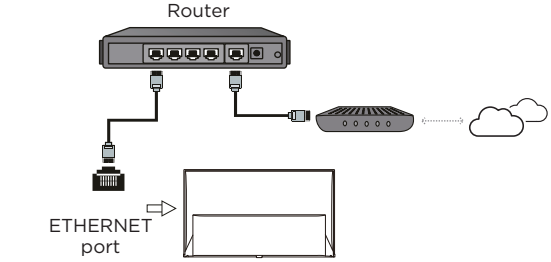

Wireless connection

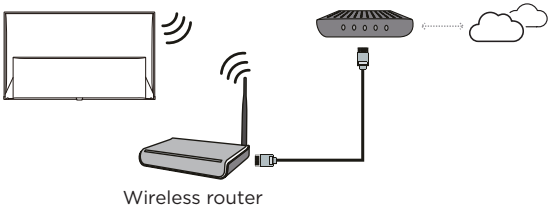

Network settings

1. Press ⌂ on the remote control to display the TV homepage.
2. Go to **Settings** menu on the Fire TV Home, press **Select** to enter the Settings menu and click on **Network** to go to Network settings.

Switch the TV on and off

1. When the power cord is connected, the TV will be turned on directly or be in standby mode. If the TV is in standby mode, press the ⏻ button on the set or the ⏻ button on the remote control to turn it on.
2. To put the TV into standby mode, press the ⏻ button on the remote control. The TV set remains powered on, but with low energy consumption.
3. To completely turn the TV off, unplug the power cord from the wall outlet.

Initial setup

The first time you switch the TV on, the **Setup** flow appears, which guides you through the initial setup process. Follow the on-screen instructions to finish the initial setup process including selecting the language, connecting to the network, and more. During each step, either make a choice or skip the step. If you skip a step, you can perform the setup later from the Settings menu.

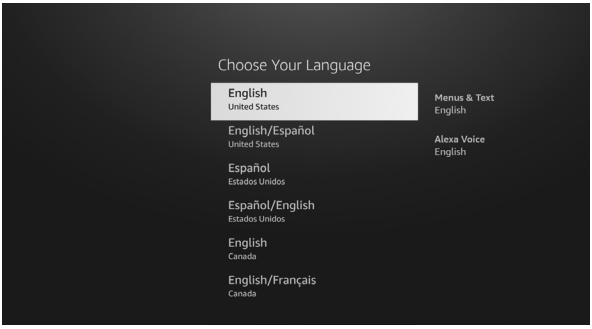

Choose Your Language

The language selection options will be listed on the screen. Select the desired language from the list and press Select to continue.

Select TV Mode

In the following step of the initial setup, you can set the TV's operation mode. Store Use option will configure your TV's settings for store environment. This option is intended only for store use. It is recommended to select Continue for home use.

Pair Your Remote with your TV

If your remote does pair with your TV automatically, this step will be skipped. If this is not the case, a search for your remote will be performed. Follow the on-screen instructions to pair your remote control.

Connect to Your Network

If you connected your TV to the Internet via an Ethernet cable before initial setup begins, this step will be skipped. If you didn't, your TV will search and list available wireless networks at this point. Select your network and press Select to connect to it. Refer to the Connect to the Internet section if you need further information. Press Fast Forward button on your remote to skip. After the

internet connection is established, the TV will check for the software updates and download the latest software next, if any available. Please note that this will take some time.

Select Your Experience

Choose the Basic experience to watch live TV and access select popular content. Choose the Full experience to interact with Alexa and access the full selection of compatible content.

	Basic Experience	Full Experience
Need Amazon Account	No, you don't register the device to your account.	Yes, you register the device to your account.
Watch Live TV	Yes.	Yes.
Watch Movies or TV Shows	Partial selection of titles, including movies and TV shows.	Full selection of all content compatible with your Fire TV.
Available Apps	Prime Video and other select third-party apps.	Compatible apps in Amazon Appstore plus everything offered under the Basic experience.
Alexa Voice Interaction	No.	Yes.

Sign In with Your Amazon Account

You can sign in to your Amazon account on the next screen. Sign in or register for an Amazon account to use the Fire TV experience. This step will be skipped if no internet connection has been established in the previous step.

Once the account has been registered, you will be asked whether you want to use the account you signed in. You can choose to change the account, read the terms and conditions, which will be accepted if you continue, at this point. Highlight the symbol with three dots next to the texts at the bottom side of the screen and press Select to read and learn more about the related subject. Highlight Continue and press Select button to proceed without changing the account.

If you have connected your TV to internet via a WiFi network a dialogue will be displayed at this point, asking if you want to save your WiFi password to Amazon. Highlight Yes and press Select to confirm and proceed. Select No to proceed without confirmation.

Scan for TV Channels

You will be presented with **Scan for TV channels** dialog during setup. Highlight **Yes** and press **Select** to confirm and search for over-the-air TV channels. Select **No** to skip searching for over-the-air TV channels.

Basic TV operations

Accessing the Inputs menu

You can access the Inputs menu through the main menu on the TV home screen. Press the ⌂ button to select the home screen, then scroll across to Inputs Menu. Press the down directional button to highlight input options from the Inputs row and press Select.

Accessing TV homepage

The basic TV homepage allows you to enjoy Internet applications, specially adapted Internet websites, and change your TV settings.

WARNING:

- Configure the network settings before using Fire TV applications.
- Slow responses and/or interruptions may occur, depending on your network conditions.
- If you experience a problem using an application, please contact the content provider.
- According to circumstances of the content provider, an application's updates or the application itself may be discontinued.
- Depending on your country's regulations, some applications may have limited service or not be supported.
- Changes in application content may be made without prior notice by the service provider.

1. Press ⌂ on the remote control to display the TV homepage.
2. Press the **Up/Down/Left/Right** button and **Select** to enter the desired Apps, functions or settings.
3. Press ⮌ to return to the homepage.

   Note: Since the connection to the Internet takes time, it's recommended that you wait a few minutes to use the Smart TV feature after you activate the TV from standby mode.

Using TV settings menu

Allow you to configure settings of TV features, such as inputs, network, display and sounds, applications, preferences, device and software, etc.

1. Press ⌂ on the remote control to display the TV homepage.
2. Go to **Settings** menu on the Fire TV Home and press **Select** to enter the Settings menu.
3. Press the **Up/Down/Left/Right** button to select menu options, then press **Select** to enter the option list or the corresponding submenu.
4. Press ⮌ to return to the previous menu.
5. Press ⌂ to close the settings menu and return to the homepage.

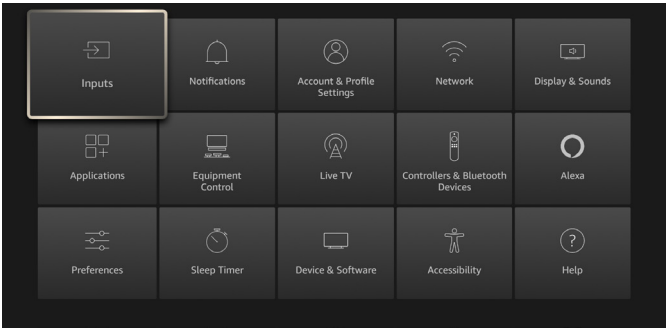

Note: The Settings menu or other features are subject to change without prior notice.

General settings

- **Inputs:** Manage inputs and adjust the input settings.
- **Notification:** Configure the Notification settings and manage notifications.
- **Amazon Account Sign in/up:** Sign in or register for an Amazon account to use the Fire TV experience.
- **Network:** Configure Network settings including Wi-Fi connectivity and configuration.
- **Display & Sounds:** Adjust picture and sound settings for your TV and more.
- **Applications:** Manage installed applications. Highlight the application you want to manage, and press Select.
- **Equipment Control:** Equipment control lets you control several functions of connected compatible devices like A/V receivers, and soundbars.
- **Live TV:** This menu allows you to search for over-the-air channels, manage your favorite channels, set up parental controls and more.
- **Controllers & Bluetooth Devices:** You can add an additional Voice Remote with Alexa to your TV. Other bluetooth devices like compatible speakers, headphones, games controllers, mice and keyboards can also be connected via bluetooth.
- **Alexa:** This menu has more information about the Alexa App, examples of things to try with Alexa, and more. Highlight Alexa and press Select.
- **Preferences:** The preferences menu allows you to set parental controls and adjust privacy, data usage monitoring, notification, and featured content settings.
- **Sleep Timer:** The sleep timer function lets you set a timer to when your TV will switch off so that you can fall asleep while watching TV knowing it will automatically switch off.
- **Device & Software:** This menu allows you to view and manage device information, access legal and compliance documents, restart your TV or reset the TV to factory defaults.
- **Accessibility:** This menu has accessibility options where you can switch on Closed Caption, Alexa Caption, VoiceView, Text Banner, Screen Magnifier, High Contrast Text (Experimental) and Audio Description.
- **Help:** If you need a little help using your TV then you should take a look at this menu. It will show you helpful videos and quick tips about your TV. It will also give you contact details for getting support about any issue you have.

Adjusting your TV

Inputs

Use the Inputs menu to change between inputs. You can also select the Media Player to view personal media from a connected USB Drive.

Notifications

In order to configure the notification settings, clear all notifications first. Press the Options button while “No New Notifications” message is displayed on the screen, then highlight Settings and press Select to see available options. Two options will be available. Use the Do Not Interrupt option to hide or show all application notification pop-ups. Use the App Notifications option to block or unblock notifications from individual applications.

Amazon Account Sign in/up

Sign in or register for an Amazon account to use the Fire TV experience. You can also modify the settings for Parental Controls.

Network

The Network menu has all the settings for connecting your TV to the Internet. You can choose from available networks and configure your network settings.

If you have connected your TV via an Ethernet cable or the Wi-Fi option is not set to ON, wireless networks will not be listed and wireless network related options will not be available.

1. Go to **Settings** menu on the Fire TV Home, press **Select** to enter the Settings menu and click on **Network** to go to Network settings.
2. Press the **Up/Down/Left/Right** button to select options, then press **Select** to connect to the network.
3. Press ⮌ to return to the previous menu.

Display & Sounds

This menu houses all the settings and adjustments for your picture and sound as well as other settings such as Power Controls, Enable Display Mirroring and HDMI-CEC Device Control.

Picture Settings: Long press ⌂ from anywhere to access Picture Settings, which are input-specific. Press Select to enter Picture Settings, select an input first and ensure that your device is connected and powered on. Select to adjust Picture Settings for this input. You can adjust Backlight, Contrast, Brightness, Color, Tint and Sharpness, and reset the picture settings to factory defaults.

Sound Settings: Long press ⌂ from anywhere to access Sound Settings, including sound mode, surround sound, and more. Press Select to enter Sound Settings, then you can adjust Sound Mode, Audio Processing, Bass, Treble, Balance, and reset the sound settings to factory defaults. You can also adjust advanced settings including Dialog Enhancer, Volume Leveler, Speaker Virtualizer and Equalizer.

Display Settings: Adjust display settings, which are input-specific. Press Select to enter Display Settings, select an input first and ensure that your device is connected and powered on. Select to adjust Display Settings such as Screen Settings for this device.

Apple AirPlay & HomeKit: Stream from your Apple devices and control content with Apple AirPlay & HomeKit. You'll be redirected to Apple AirPlay & HomeKit settings for setup and configuration.

Power Controls: Adjust the power on behavior for your TV. You can select Home or Last Input as the power on screen.

Audio Output: Select audio output method of TV speakers, HDMI, or Optical. You can turn on or off TV Speakers, and set Audio output jack, ARC Mode, Digital Audio Format, DTS DRC and Bluetooth Audio Sync options.

Enable Display Mirroring: Enable other mobile devices to temporarily mirror their display to your Fire TV, by making it discoverable. This is referred to as Display Mirroring or Miracast on your mobile device.

Navigation Sounds: Navigation sound is the sound played when navigating or selecting an item on the TV screen. Press SELECT to turn off navigation sounds.

Screensaver: Personalize your screensaver: change albums, display order, slide style, and slide speed.

HDMI-CEC Device Control: Control HDMI CEC (Consumer Electronics Control) capable devices using your TV remote, including playback, navigation, and powering on and off compatible devices. You can enable or deny One Touch Play, and turn on or off ARC/eARC, Power Control and Remote Control Pass Through.

Prime Video Casting: Allow casting to this device from Prime Video on Android, iOS and Fire tablets. Disabling it clears casting cache.

Applications

Amazon Photos: Control Amazon Photos settings. To PIN protect your photos, go to Preferences and enable Parental Controls. Type in a PIN to see all options.

Silk Browser: Change Amazon Silk Browser settings.

Appstore: Allow Apps to update automatically, control in-App purchases and manage how to open external market links.

Auto Offload: Automatically offload unused apps when your Fire TV is low on storage. App data will be saved so you can easily reinstall the app later.

Manage Installed Applications: View and managed installed applications, including force stop, uninstall, clear data, and clear cache.

Equipment Control

Add Equipment: Add additional compatible devices that Fire TV and Alexa can switch to, or control. With your Fire TV remote and Alexa, you can turn your soundbar or receiver on and off, change volume and switch inputs. Setup will take 5 to 10 minutes.

Live TV

Channel Scan: Rescan for available channels.

Favorite Channels: View and manage your favorite channels.

Manage Channels: Manage the channels and preferred order of your Live sources for browse, search and voice.

Parental Controls: Restrict over-the-air movies and TV shows.

Sync Sources: Sync your Live TV sources to refresh the data on this device.

Controllers & Bluetooth Devices

Voice Remotes with Alexa: Pair, unpair and update your Alexa voice remotes.

Game Controllers: Pair and unpair Bluetooth game controllers.

Other Bluetooth Devices: Pair, unpair, and manage other Bluetooth devices, including speakers, headphones, remotes, keyboards, and mice.

Alexa

Alexa App: Press SELECT to learn about the Alexa App.

Things to Try: Press SELECT to learn what you can do with Alexa. Make sure to speak to Alexa in English.

Unlock the power of your TCL TV with Fire TV built in with the included Voice Remote with Alexa. Use your voice to watch live TV, search for titles, play music, switch inputs, control compatible smart home devices, and more. Switch inputs and go from watching your favorite TV show to the big game. You can also ask Alexa to check the weather, set timers and reminders, and more. Here are a few things that you can do with your voice on your TCL Fire TV:

To do this on your TCL Fire TV...	Say this...
Live TV Controls For supported Apps that feature live TV access, you can use Alexa to change channels. You can use Alexa to navigate to the Channel Guide and the Live tab.	"Alexa, go to [channel / network] on [App]." "Alexa, watch [channel / network]." "Alexa, go to Channel Guide." "Alexa, go to Live."
Search for movies and TV shows Alexa can find movies and TV shows.	"Alexa, show me new [tv shows / movies]." "Alexa, find [title / genre]."
Alexa Requests See the responses on Fire TV when you make an Alexa request.	"Alexa, show me the weather." "Alexa, add x to my shopping list." "Alexa, play songs by [artist]." "Alexa, show me restaurants nearby."

Preferences

Parental Controls: Restrict access to videos, purchasing and certain types of content.

Privacy Settings: Manage device privacy settings.

Data Usage Monitoring: Monitor data consumption on your TV.

Notification Settings: Turn off all notification pop-ups or block/unblock notifications from specific apps.

Featured Content: Manage video and audio in the Featured Content area on Home.

Sync Recent Content: Include Prime Video titles watched on other devices in the Recent row on this device.

Location: Set your ZIP code to customize weather. You can also set this in the Alexa App.

Time Zone: Change time zone settings.

Language: Choose a different system language.

Standby LED: When your TV is in stand by, the white LED on front of the TV will be on or off according to your choice.

Sleep Timer

The sleep timer function lets you set a countdown to when your TV will switch off so that you can fall asleep while watching TV knowing it will automatically switch off. You can set the timer from 5 mins to 240 mins.

Device & Software

About: View and manage device information, available storage space, network connections, and system updates.

Legal & Compliance: Access legal & compliance documents.

Sleep: Put TV to sleep. To wake up TV, press the Power button or Select button on the remote.

Restart: Restart your TV.

Reset to Factory Defaults: Remove all personal data and downloaded content from your TV.

Accessibility

Closed Caption: Show closed captions for videos when available.

Alexa Caption: Show captions for Alexa responses when available.

VoiceView: Manage voice guidance settings, including turning VoiceView on and off, reading speed, and volume.

Text Banner: Displays text related to the focused item in a box with customizable font size, colors, and more.

Screen Magnifier: Enable the use of button combinations to magnify the screen.

High Contrast Text (Experimental): Changes text to black or white and adds a border.

Audio Description: Allows you to add an audio track containing a verbal description of images and actions to over the air channels and Prime Video content.

Feedback & Support: Your suggestions are important and help us improve the accessibility of Fire TV. If you need help now, please contact Amazon Customer Service Accessibility Support. The screen shows contact details for getting support about any issue you have.

Help

If you need a little help using your TV then you should take a look at this menu. It will show you helpful videos and quick tips about your TV.

You can choose from help topics including Troubleshooting, Using Your Fire TV, Amazon Music, Profiles and Parental Controls, Subscriptions and Purchases, Video and Music with Alexa, Accessibility, Smart Home and Communication with Alexa, and Apps.

Other information

Troubleshooting

Please check the following list before requesting service.

There is no picture or sound.

- Make sure the power cord is properly inserted in the power outlet.
- Make sure the source type is set correctly.
- Make sure the antenna is properly connected.
- Make sure the volume is not set to minimum or the sound is not set to mute.
- Make sure the headphones are not connected.
- The TV may be receiving a signal other than from TV broadcasting stations.

Picture is not clear.

- Make sure the antenna cable is properly connected.
- Consider whether your TV signal is being properly received.
- Poor picture quality can occur due to a VHS camera, camcorder, or other peripheral being connected at the same time. Switch off one of the other peripherals.
- The 'ghost' or double image may be caused by obstruction to the antenna due to high-rise buildings or hills. Using a highly directional antenna may improve the picture quality.
- The horizontal dotted lines shown on the pictures may be caused by electrical interference, e.g., hair dryer, nearby neon lights, etc. Turn off or remove these.

Picture is too dark, too light or tinted.

- Check the color adjustment.
- Check the brightness setting.
- Check the sharpness function.

Remote control does not work.

- Check the batteries of the remote control.
- Make sure the remote sensor window on the front of the TV is not in strong fluorescent lighting.
- Try to clean the remote sensor window on the front of the TV with a soft cloth.

If the above suggestions do not solve your technical issue, please refer to the warranty card for service information.

Broadcasting & Operating Environment

Broadcasting system	ATSC standard (8VSB), QAM
Receiving Channels	VHF2-13 UHF14-69 CATV 14-36 (A)-(W) 37-59 (AA)-(WW) 60-85 (AAA)-(ZZZ) 86-94 (86)-(94)95-99 (A-5)-(A-1) 100-135 (100)-(135) 01 (4A)
Tuner type	Frequency synthesized
Operating Temperature	5°C to 35°C (41°F to 95°F)
Operating Humidity	20% to 80%, non-condensing
Storage Temperature	-15°C to 45°C (5°F to 113°F)
Storage Humidity	10% to 90%, non-condensing

Battery CAUTION & Disposal Information

1. For best results, use alkaline-type batteries.
2. Do not mix Alkaline, Standard (Carbon-Zinc), or Rechargeable (Nickel Cadmium or Nickel Metal Hydride) batteries.
3. Always replace depleted batteries with two same brand-new batteries from the same manufacturer. Never use damaged batteries.
4. Do not use Rechargeable (Nickel Cadmium or Nickel Metal Hydride) batteries.
5. Install only new batteries of the same type in your product. There is a risk of fire or explosion if the battery is replaced by an incorrect type.
6. Do not mix old and new batteries.
7. Batteries should not be exposed to excessive heat, such as prolonged direct sunlight, open flame, or fire of any kind as it may result in an explosion, or leakage of flammable liquid, or gas.
8. Batteries should not be exposed to extremely low air pressure as it may result in an explosion or the leakage of flammable liquid or gas.
9. Failure to insert batteries in the correct polarity, as indicated in the battery compartment, may shorten the life of the batteries or cause batteries to leak.
10. Batteries should be recycled or disposed of as per state and local guidelines. Do not dispose of batteries in a fire, hot oven, or mechanically crushing or cutting a battery, which may result in an explosion.

ELECTRONICS & PACKAGING RECYCLING INFORMATION

Recycle Your Device Properly. In accordance with state and local laws, this product may be classified as a covered electronic device and must not be disposed of with household trash. TCL encourages consumers to always look for a recycling or reuse alternative to discarding electronic products through drop-off and mail-back options. Visit **tcl.com/us/en/sustainability/electronics-recycling** for instructions and authorized collection sites. Click on our convenient interactive map to quickly locate a solution in your community. For mail-back option, visit **www.mrmrecycling.com/recycle-now.php** and follow the instructions.

Warning: To avoid the danger of suffocation, keep plastic packaging away from pets, babies, and children. Do not use packaging bags in cribs, beds, carriages, or playpens.

Legal Statement

Due to the various capabilities of products featuring the SmartTV - Services, as well as limitations in the available content, certain features, applications, and services may not be available on all devices or in all territories. Some features on SmartTV may also require additional peripheral devices or membership fees that are sold separately. Please visit our website for more information on specific device information and content availability. The services and availability of content through SmartTV are subject to change from time to time without prior notice.

All content and services accessible through this device belong to third parties and are protected by copyright, patent, trademark and/or other intellectual property laws. Such content and services are provided solely for your personal noncommercial use. You may not use any content or services in a manner that has not been authorized by the content owner or service provider. Without limiting the foregoing, unless expressly authorized by the applicable content owner or service provider, you may not modify, copy, republish, upload, post, transmit, translate, sell, create derivative works, exploit, or distribute in any manner or medium any content or services displayed through this device.

YOU EXPRESSLY ACKNOWLEDGE AND AGREE THAT USE OF THE DEVICE IS AT YOUR SOLE RISK AND THAT THE ENTIRE RISK AS TO SATISFACTORY QUALITY, PERFORMANCE AND ACCURACY IS WITH YOU. THE DEVICE AND ALL THIRD PARTY CONTENT AND SERVICES ARE PROVIDED “AS IS” WITHOUT WARRANTY OF ANY KIND, EITHER EXPRESS OR IMPLIED. TCL EXPRESSLY DISCLAIMS ALL WARRANTIES AND CONDITIONS WITH RESPECT TO THE DEVICE AND ANY CONTENT AND SERVICES, EITHER EXPRESS OR, IMPLIED, INCLUDING BUT NOT LIMITED TO, WARRANTIES OF MERCHANTABILITY, OF SATISFACTORY QUALITY, FITNESS FOR A PARTICULAR PURPOSE, OF ACCURACY, OF QUIET ENJOYMENT, AND NON-INFRINGEMENT OF THIRD PARTY RIGHTS. TCL DOES NOT GUARANTEE THE ACCURACY, VALIDITY, TIMELINESS, LEGALITY, OR COMPLETENESS OF ANY CONTENT OR SERVICE MADE AVAILABLE THROUGH THIS DEVICE AND DOES NOT WARRANT THAT THE DEVICE, CONTENT OR SERVICES WILL MEET YOUR REQUIREMENTS, OR THAT OPERATION OF THE DEVICE OR SERVICES WILL BE UNINTERRUPTED OR ERROR-FREE. UNDER NO CIRCUMSTANCES, INCLUDING NEGLIGENCE, SHALL TCL BE LIABLE, WHETHER IN CONTRACT OR TORT, FOR ANY DIRECT, INDIRECT, INCIDENTAL, SPECIAL OR CONSEQUENTIAL DAMAGES, ATTORNEY FEES, EXPENSES, OR ANY OTHER DAMAGES ARISING OUT OF, OR IN CONNECTION WITH, ANY INFORMATION CONTAINED IN, OR AS A RESULT OF THE USE OF THE DEVICE, OR ANY CONTENT OR SERVICE ACCESSED BY YOU OR ANY THIRD PARTY, EVEN IF ADVISED OF THE POSSIBILITY OF SUCH DAMAGES.

Third party services may be changed, suspended, removed, terminated or interrupted, or access may be disabled at any time, without notice, and TCL makes no representation or warranty that any content or service will remain available for any period of time. Content and services are transmitted by third parties by means of networks and transmission facilities over which TCL has no control. Without limiting the generality of this disclaimer, TCL expressly disclaims any responsibility or liability for any change, interruption, disabling, removal of or suspension of any content or service made available through this device. TCL may impose limits on the use of or access to certain services or content, in any case and without notice or liability. TCL is neither responsible nor liable for customer service related to the content and services. Any question or request for service relating to the content or services should be made directly to the respective content and service providers.

TCL North America Limited Product Warranty

All New TCL Product Models including LCD/LED Televisions, Gaming Monitors, Sound Bars, and Appliances including Window Air Conditioners, Portable and Through-The-Wall Air Conditioners, Dehumidifiers, Air Purifiers, and Robot Vacuums (each individually referred to as a "Product" or "Unit", and together referred to as the "Products").

What your warranty covers: Defects in materials or workmanship to the original owner of this TCL Product when purchased as new from an Authorized Dealer of TCL brand Products in the United States or Canada, provided that the Product was properly purchased within the Territories pursuant to all product requirements, instructions, and packaged with this warranty statement.

New Products (Non-Commercial Use)

For how long after your purchase:

• One (1) year from date of purchase or delivery for parts and labor for non-commercial use.

New Products (Commercial Use)

For how long after your purchase:

• Six (6) months from date of purchase or delivery for parts and labor for commercial use.

Commercial use includes, but is not limited to, the use of this Product in a commercial or business environment, the use of this Product in an institution or for institutional purposes, or other commercial purposes including rental purposes.

What we will do

• At TCL's discretion, (1) pay for both labor charges and parts to repair your Product, or (2) replace your Product with a new or refurbished/remanufactured equivalent Product. The decision to repair or replace will be made solely by TCL. See section entitled "How to get service."

How to get service

• Before submitting a request for warranty service, please visit support.tcl.com for helpful FAQs and additional troubleshooting suggestions.

• To get warranty service, contact TCL Customer Support by visiting support.tcl.com. Please have your Proof of Purchase, Product type, model number, serial number, and ZIP code ready. Troubleshooting and prior approval from a TCL representative MUST occur before sending in your Product to a TCL Service Center.

• A representative must troubleshoot your problem over the telephone, via chat, or through e-mail before receiving service. If it is determined that your Unit requires service, the service location will be at the sole discretion of TCL based upon the Limited Warranty Statement. Warranty service shall only be available upon scheduling during regular business hours. TCL shall not be responsible for Customer's inability to schedule warranty service during regular business hours. If Customer either misses or cancels warranty service more than two times with less than twenty-four hours' notice, TCL shall no longer be responsible for warranty service. In order to obtain warranty service, Customer shall reasonably cooperate in providing proof of the issues requiring service, including, but not limited to pictures, videos, and follow the instructions of the technician diagnosing the issue. In the event that Customer is abusive, harassing, vulgar, and/or provides an otherwise unsafe environment for television repair, service, or diagnostics, TCL shall be discharged from any and all limited warranty obligations regarding the Product.

• At the sole discretion of TCL, television screen sizes 43-inches and smaller will either be repaired at an Authorized TCL Service Center or directly exchanged for a new or refurbished/re-certified Unit. At the sole discretion of TCL, television screen sizes 44-inches or larger will either be repaired or directly exchanged for a new or refurbished/re-certified Unit at an Authorized TCL Service Center or in-home. At the sole discretion of TCL, Sound Bars, and Appliances including Window Air Conditioners, Portable and Through-The-Wall Air Conditioners, Dehumidifiers, Air Purifiers, and Robot Vacuums will either be repaired or directly exchanged for a new or refurbished/re-certified Unit at an Authorized TCL Service Center or in-home. In the event of a service visit where the on-site technician, in his-her sole discretion, deems the home or property

conditions to be hazardous and/or unsafe, TCL reserves the right to cancel or re-schedule the service visit, or opt for an exchange of the in-warranty Unit for a refurbished/re-certified Unit in lieu of the in-home service visit.

- TCL is not responsible for transportation costs for warranty coverage, including but not limited to Unit repair or replacement, to the Authorized TCL Service Center or TCL-designated address. However, TCL will pay for return shipping to a United States or Canada address only. TCL will provide instructions for packaging and shipping the Unit to the Authorized TCL Service Center or TCL-designated address. Units that are improperly packed and damaged during shipping are not covered under your limited Product warranty.
- Proof of purchase in the form of a bill of sale, receipt, invoice from an Authorized Dealer which is evidence that the Product is within the warranty period must be presented to obtain warranty service. Failure to provide adequate and/or non-fraudulent proof of purchase shall result in denial of a limited warranty claim.
- In the event that a Unit is to be replaced, a picture of the back of the Unit showing the model and serial number and picture of the Product issue itself may be required as well as shipping of the product to TCL prior to replacement.
- If a Unit is replaced, You must check the product within five (5) days of receipt and report any damage to TCL immediately. Failure to do so shall release TCL from any and all claims related to shipping damage. Replacement televisions shall only have limited warranty coverage for the period of time remaining on the original Product's Limited Warranty or thirty (30) days, whichever period is longer.
- PRE-AUTHORIZATION MUST BE OBTAINED BEFORE (1) SENDING ANY PRODUCT TO AN AUTHORIZED TCL SERVICE CENTER, OR (2) OBTAINING ANY IN-HOME REPAIR/ REPLACEMENT/RENTAL SERVICES.

What your warranty does not cover

Property damage, malfunction, or failure of the Product or related system, or personal injury caused by or resulting from:

- A Unit sold in "As-Is", "Used", "Factory Reconditioned", "Factory Re-Certified", or "Refurbished", condition or with faults.
- Damage caused by transportation or handling, storage, onsite construction, transit, including damage during shipment from a Retailer (please contact your Retailer for assistance).
- Operating the Product in incomplete or unfinished structures
- Improper sizing, selection or specification of the Product
- Improper or deferred maintenance contrary to TCL's schedule or instructions
- Extended Service Plans purchased from Retailers. Please contact your Retailer and/or your extended service plan provider for assistance.
- Customer installation including Products used in any manner contrary to the Product documentation. (Your Owner's Manual describes how to install, adjust, and operate your Unit. Any additional information should be obtained from your Authorized Dealer).
- Service calls to your home for delivery or pick-up, installation, instruction, replacement of house fuses, connection of house wiring or plumbing, or to correct unauthorized repairs.
- Installation and related adjustments, or damage resulting from installation, repair, or service.
- Damage resulting from non-approved installation or repair methods.
- Failure of the Product to perform due to wireless signal reception problems not caused by your Unit, or due to power failures or interruptions, or inadequate electrical service.
- Malfunctioning pixels of less than two malfunctioning pixels per million pixels as detailed in TCL's Pixel Policy.
- Damage from misuse, abuse, neglect, insects, normal wear and tear, cosmetic damage, mishandling, faulty installation, inadequate wireless signal reception, inadequate electrical wiring, or power line surges.

- Physical abuse or misuse of the Product (including failure to perform any scheduled maintenance as described in the Product documentation such as air filter cleaning, or any Product damaged by excessive physical or electrical stress).
- Damage caused by operating the Product in a corrosive or wet environment, including those containing chlorine, fluorine or any other hazardous or harmful chemicals or environmental factors
- Operating the Product in environments with excessive or harmful volatile organic compounds (VOCs), improper air makeup or supply, or with inadequate ventilation.
- Markings or images on the television's panel resulting from viewing fixed images (including but not limited to certain 4:3 images on wide screen televisions, or data or images in fixed screen locations from banners, video games, or certain broadcast networks).
- Units that have original factory serial numbers that are unreadable or missing, or that have been changed, defaced, or altered in any manner.
- Batteries.
- A television that has been modified or incorporated into other Products, or that has had the serial number removed or altered.
- Use of accessories or components that are not compatible with this Product.
- A Unit purchased or serviced outside of the United States or Canada.
- Costs of shipping the Unit to the Authorized TCL Service Center or TCL-designated address. TCL will pay for return shipping to the customer to a United States or Canada address only.
- Events of force majeure or damage caused by other factors such as earthquakes, fires, lightning, hail, wind, freezing, flooding, standing, pooling, or ponding water, power surges, fluctuations in or interruptions of electrical power, rodents, vermin, insects, or other animal-or-pest related issues.
- Acts of nature or God (as illustrative examples and for the avoidance of doubt, such acts of nature or God include but are not limited to damage caused by earthquakes, fires, lightning, or flood whether caused by nature or humans).
- Special, incidental, or consequential damages.

This Limited Warranty Also Excludes

- Labor or any other costs incurred for service, maintenance, repair, removing, replacing, installing, complying with local building and electrical codes, or shipping or handling of defective or replacement Products or parts (except as expressly provided in Section 1.b. above);
- Consumable items, such as air filters and refrigerant (if applicable);
- Service calls where no defect is found;
- Product installation, set-up, and related adjustments;
- Adjustments of user controls
- Products purchased or installed outside of the Territories or purchased from any person, entity, or source not expressly authorized by TCL;
- Products with missing or unreadable original factory serial numbers or that have had the original factory serial number or any part thereof changed, altered, defaced, removed, or otherwise modified in any manner; and
- Peripheral third party components connected to the Product, such as DVD players, gaming systems, cable/satellite boxes, streaming sticks, refrigerant piping, electrical wiring, pumps, valves, controls, accessories, etc.
- Issues arising from the operating system, quality or speed of internet service or Wi-Fi, video quality issues, or use/performance of third-party applications. This includes all video applications and similar services. In such cases, the warranty does not apply, and support should be sought from the respective service or platform provider.

LIMITATION OF WARRANTY

- EXCEPT AS OTHERWISE PROVIDED IN THIS LIMITED WARRANTY, TCL MAKES NO OTHER WARRANTIES OF ANY KIND WHATSOEVER REGARDING THE PRODUCT. NO VERBAL OR WRITTEN INFORMATION GIVEN BY TTE TECHNOLOGY, INC. DBA TCL NORTH AMERICA, ITS AGENTS OR EMPLOYEES SHALL CREATE A GUARANTY OR IN ANY WAY INCREASE OR MODIFY THE SCOPE OF THIS WARRANTY. NO ONE IS AUTHORIZED TO CHANGE THIS LIMITED WARRANTY IN ANY RESPECT OR TO CREATE ANY OTHER OBLIGATION OR LIABILITY FOR TCL IN CONNECTION WITH THE PRODUCT. TCL DISCLAIMS AND EXCLUDES ALL WARRANTIES NOT EXPRESSLY PROVIDED HEREIN AND ALL REMEDIES WHICH, BUT FOR THIS PROVISION, MIGHT ARISE BY IMPLICATION OR OPERATION OF LAW. ANY AND ALL IMPLIED WARRANTIES INCLUDING WARRANTIES OF MERCHANTABILITY AND OF FITNESS FOR A PARTICULAR PURPOSE ARE EXPRESSLY LIMITED TO A TERM EQUAL TO THE TERM OF THIS LIMITED WARRANTY. SOME STATES DO NOT ALLOW LIMITATIONS ON HOW LONG AN IMPLIED WARRANTY LASTS, SO THE ABOVE LIMITATION MIGHT NOT APPLY TO YOU. TCL DISCLAIMS ALL LIABILITY FOR THE ACTS, OMISSIONS, AND CONDUCT OF ALL THIRD PARTIES (INCLUDING BUT NOT LIMITED TO THE INSTALLING OR SERVICING CONTRACTOR, ANY DISTRIBUTOR, OR DEALER) IN CONNECTION WITH OR RELATED TO THE PRODUCT.
- UNDER NO CIRCUMSTANCES SHALL TCL BE LIABLE FOR ANY INDIRECT, INCIDENTAL, SPECIAL, PUNITIVE, OR CONSEQUENTIAL DAMAGES INCLUDING, WITHOUT LIMITATION, INFRINGEMENT OF THIRD PARTY RIGHTS, LOST GOODWILL, LOST REVENUES OR PROFITS, WORK STOPPAGE, PRODUCT FAILURE, IMPAIRMENT OF OTHER GOODS, COSTS OF REMOVAL AND REINSTALLATION OF THE PRODUCT, LOSS OF USE, INJURY TO PERSONS OR PROPERTY ARISING OUT OF OR RELATED TO THE PRODUCT WHETHER BASED ON BREACH OF WARRANTY, BREACH OF CONTRACT, TORT OR OTHERWISE, EVEN IF TCL HAS BEEN ADVISED OF THE POSSIBILITY OF SUCH DAMAGE. IN NO EVENT SHALL TCL'S LIABILITY EXCEED THE ACTUAL PURCHASE PRICE OF THE PRODUCT WITH RESPECT TO WHICH ANY CLAIM FOR THE PRODUCT IS MADE.
- REPAIR OR REPLACEMENT AS PROVIDED UNDER THIS WARRANTY IS THE EXCLUSIVE REMEDY OF THE CONSUMER. TTE TECHNOLOGY, INC. DBA TCL NORTH AMERICA SHALL NOT BE LIABLE FOR SPECIAL, INCIDENTAL, OR CONSEQUENTIAL DAMAGES RESULTING FROM THE USE OF THIS PRODUCT OR ARISING OUT OF ANY BREACH OF ANY EXPRESS OR IMPLIED WARRANTY ON THIS PRODUCT. THIS DISCLAIMER OF WARRANTIES AND LIMITED WARRANTY ARE GOVERNED BY THE LAWS OF THE STATE OF CALIFORNIA. EXCEPT TO THE EXTENT PROHIBITED BY APPLICABLE LAW, ANY IMPLIED WARRANTY OF MERCHANTABILITY OR FITNESS FOR A PARTICULAR PURPOSE ON THIS PRODUCT IS LIMITED TO THE APPLICABLE WARRANTY AND WARRANTY PERIOD SET FORTH ABOVE. THIS WARRANTY IS SUBJECT TO CHANGE WITHOUT NOTICE. PLEASE VISIT WWW.TCL.COM TO VIEW THE MOST CURRENT VERSION.
- EXCEPT WHERE PROHIBITED BY LAW, ALL DISPUTES BETWEEN YOU AND TCL ARISING OUT OF OR RELATING IN ANY WAY TO THIS LIMITED WARRANTY OR THE PRODUCT SHALL BE RESOLVED EXCLUSIVELY THROUGH BINDING ARBITRATION, AND NOT IN A COURT OF GENERAL JURISDICTION. BINDING ARBITRATION MEANS THAT YOU AND TCL ARE EACH WAIVING THE RIGHT TO A COURT HEARING, RIGHT TO A JURY TRIAL, AND RIGHT TO BRING OR PARTICIPATE IN A CLASS ACTION. PLEASE CAREFULLY REVIEW THE DISPUTE RESOLUTION PROVISIONS BELOW, WHICH ALSO DESCRIBE YOUR RIGHT TO OPT-OUT.
- In the event of a dispute, you must first notify TCL in writing at least 30 days before initiating any arbitration proceeding by sending a letter to TCL at TTE Technology, Inc., Attn: Legal Department, 189 Technology Drive, Irvine, CA 92620. The notice must provide your name, address, and telephone number; identify the Product that is the subject of the claim; and describe the nature of the claim and the relief being sought. If you and TCL are unable to resolve the dispute within 60 days, either party may proceed to file a claim for binding arbitration. Unless you opt-out as provided below, all claims must be brought in the parties' individual capacity, and not as a plaintiff or class member in any purported class or representative proceeding. Further, you agree that, except as specifically provided herein, the arbitrator may not consolidate proceedings of more than one person's claims and may not otherwise preside over any form of a representative

or class proceeding. This waiver applies to class arbitration unless such arbitration is necessary to effectuate the enforcement of the class action waiver or in the event that TCL expressly agrees to class arbitration. Instead of arbitration, either party may bring an individual action in small claims court if the dispute qualifies under the monetary limitations for small claims court proceedings, but that small claims court action may not be brought on a class or representative basis.

- The arbitration will be administered by the American Arbitration Association ("AAA") before a single arbitrator under the AAA's Consumer Arbitration Rules and Mediation Procedures that are in effect at the time the arbitration is initiated (referred to as the "AAA Rules") and under the procedures set forth in this section. The AAA Rules are available online at www.adr.org/consumer. Send a copy of your written demand for arbitration, as well as a copy of this provision, to the AAA in the manner described in the AAA Rules. You must also send a copy of your written demand to TCL at TTE Technology, Inc., Attn: Legal Department, 189 Technology Drive, Irvine, CA 92620. You and TCL shall follow the AAA Rules applicable to initial filing fees, but in no event will you be responsible for any portion of those fees in excess of the filing or initial appearance fees applicable to state or federal court actions in the jurisdiction where the arbitration will be conducted. The arbitration will be conducted virtually, unless you and TCL agree otherwise or the arbitrator orders an in-person hearing. If there is a conflict between the AAA Rules and the rules set forth in this section, the rules set forth in this section will govern. This arbitration provision is governed by the Federal Arbitration Act. Judgment may be entered on the arbitrator's award in any court of competent jurisdiction.
- You may opt-out of the foregoing arbitration and class action/jury trial waiver provision by sending writing notification to TCL in writing within thirty (30) days of the original purchase at TTE Technology, Inc., Attn: Legal Department, 189 Technology Drive, Irvine, CA 92620. Such notification must include your name and address, your warranted Product's model and serial number, the date of purchase, and a clear statement of your intent to opt-out of this dispute resolution procedure. No other form of notice will be effective to opt-out of this dispute resolution procedure. Opting out of this dispute resolution procedure will not affect the coverage of the Limited Warranty in any way, and you will continue to enjoy the full benefits of the Limited Warranty. If you keep this Product and do not opt out, then you accept all terms and conditions of the dispute resolution procedure described above.

How State Law relates to this warranty

- Some states or provinces do not allow limitations on warranties or exclusions or limitation of damages or limitations on how long an implied warranty lasts, so the above limitations or exclusions may not apply to you. Some states do not allow limitations on how long an implied warranty lasts, so the above limitation might not apply to you. TCL disclaims all liability for the acts, omissions, and conduct of all third parties (including but not limited to the installing or servicing contractor, any distributor, or dealer) in connection with or related to the product.
- This warranty gives you specific legal rights, and you also may have other rights that vary from state to state or province to province.
- If you purchased your Unit outside of the United States or Canada or seek warranty service coverage outside of the United States or Canada, this warranty does not apply. Contact your dealer for warranty information. Service calls which do not involve defective materials or workmanship are not covered by this limited warranty. Costs of such service calls are the sole responsibility of the purchaser.
- This Limited Warranty is not transferable to subsequent purchasers or anyone else who may acquire an interest in the Product unless the original purchaser is a resident of Texas or Florida and complies with this provision. Residents of Texas and Florida may transfer the rights under this Limited Warranty ONLY if the Product is transferred to a subsequent purchaser as part of an agreement between the original purchaser and a subsequent purchaser of the sale of the entire residence in which the Product was first installed. This provision does not in any way extend or modify the length of time this Limited Warranty applies, and the subsequent purchaser's warranty duration shall match that of the original purchaser.
- If any term or provision of this Limited Warranty is invalid, illegal, or unenforceable in any jurisdiction, such invalidity, illegality, or unenforceability shall not affect any other term or

provision of this Limited Warranty or invalidate or render unenforceable such term or provision in any other jurisdiction.

- TCL reserves the right to amend or modify this Limited Warranty from time to time without notice. Please visit www.TCL.com to view the most current version of this Limited Warranty.