TCL

REGISTER NOW
See inside for details &
protect your purchase

Hi! Let's get started.



65/75/85QM8L

TCL Home App
Your TCL Smart Hub.
Download Now!

Register and protect your purchase

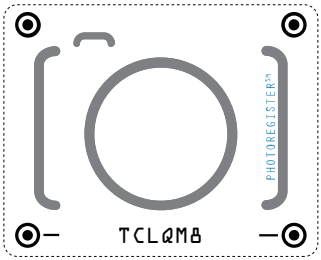

TEXT TO REGISTER

Text a photo of the camera icon to **71403**

Or register online at register.tcl.com

Need help? Visit photoregister.com/help or text HELP to 71403

Add a TCL Protection Plan when you register your product and be covered from life's mishaps

Thank you for choosing TCL. We want your ownership experience to bring you as much joy as the television you purchased does, so we're offering you a special price on TCL Protection Plans when you purchase during registration. Add a TCL Protection Plan within your first 30 days of ownership to receive the best value and we won't let anything get in the way of your viewing pleasure.

Benefits & Description	PROTECT	PROTECT PLUS
Extended Manufacturer Coverage Extended parts & labor coverage for manufacturer defects.	Up To 4 Years	Up To 4 Years
Priority Service Free shipping and rapid turn-around time.	3-5 Days	3-5 Days
Product Replacement Free 1-time replacement if product cannot be fixed.	⊕	⊕
TCL Parts & Service Genuine TCL parts & factory certified service.	⊕	⊕
No Deductible $0 out of pocket expense.	⊕	⊕
Pixel Repair and Burn-In Coverage Don't let shadows or off pixels prevent you from clear viewing.	⊕	⊕
Accidental Damage Protection Coverage for drops, breaks and spills starts after 30 days.		⊕
Complimentary Remove & Reinstall Don't risk it-we'll remove and reinstall televisions 65" and larger.		⊕
Lost Your Remote? No problem! We'll replace your remote, so you never have to leave your couch. *One time only.*		⊕

DO NOT RETURN TO STORE

WE ARE READY TO HELP

contact us first with any questions

TCL SUPPORT:
support.tcl.com
1-877-300-9576

TAKE CARE WHEN REMOVING THE TV

Important Information

CAUTION

RISK OF ELECTRIC SHOCK.
DO NOT OPEN.

Caution: To reduce the risk of electric shock, do not remove cover (or back). No user serviceable parts inside. Refer servicing to qualified service personnel.

This symbol indicates “dangerous voltage” inside the product that presents a risk of electric shock or personal injury.

This symbol indicates important instructions accompanying the product.

This symbol indicates that this product incorporates double insulation between hazardous main voltage and user accessible parts. When servicing, use only identical replacement parts.

WARNING

DOUBLE POLE/NEUTRAL FUSING!

- Touching dangerous live parts on the power board may result in electric shock.
- During maintenance, it is necessary to disconnect from mains (such as unplugging the power plug) and confirm that there is no dangerous voltage on the power supply board.

This symbol indicates that high voltage is present inside. It is dangerous to make any kind of contact with any internal part of this product.

This symbol indicates that the fuse may be in the neutral, and that the mains shall be disconnected to deenergize the phase conductors.

WARNING

To reduce the risk of fire or electric shock, do not expose this product to rain or moisture. This product should not be exposed to dripping or splashing. No objects filled with liquids, such as vases, should be placed on the apparatus.

WARNING

The TV is unstable if it is not properly attached to the base or mounted to the wall. Please follow the base or wall mounting instructions provided in the User’s Guide to ensure your safety.

Warning: The batteries should not be exposed to excessive heat, such as prolonged direct sunlight, open flame, or fire of any kind. Refer to the identification/rating label located on the back panel of your product for its proper operating voltage.

Cable TV Installer: This reminder is provided to call your attention to Article 820-40 of the National Electrical Code (Section 54 of the Canadian Electrical Code, Part 1) which provides guidelines for proper grounding and, in particular, specifies that the cable ground should be connected to the grounding system of the building as close to the point of cable entry as practical.

Important: This television is a table model and is designed to sit on a firm, flat surface. Do not place the TV on soft carpeting or on a similar surface as this may cause the ventilation slots located on the bottom of the unit to be blocked and may result in reduced product lifespan from overheating. To assure adequate ventilation for this product, maintain a spacing of one (1) inch from the top and side of the TV receiver and two (2) inches from the rear of the TV receiver and other surfaces.

Make sure the TV stand or base you use is of adequate size and strength to prevent the TV from being accidentally tipped over, pushed off, or pulled off. This may cause personal injury and/or damage the TV. Refer to the Important Safety Instructions on the next page.

The Power button ⏻ on this TV and your remote control puts the TV into a very low-power standby mode but will not completely turn the power off. In order to completely shut the power off, you will need to disconnect the power cord from the outlet. The mains plug/appliance coupler is used to completely turn off the device. If you prefer to completely turn off the device, you should install the TV in a manner that allows you to disconnect the power cord when desired.

Product Information

Keep your sales receipt to obtain warranty parts and service and for proof of purchase. Attach it here and record the serial and model numbers in case you need them. These numbers are located on the product.

Warning: Changes or modifications to this unit not expressly approved by the party responsible for compliance could void the user’s authority to operate the equipment. Keep the apparatus at least 8 inches away from the human body.

For the best viewing experience, remove the energy guide label from the TV front panel or TV screen before use.

Model No. _____ **Serial No.** _____

Purchase Date _____ **Dealer/Address/Phone** _____

Important Safety Instructions

1. Read these instructions.
2. Keep these instructions.
3. Heed all warnings.
4. Follow all instructions.
5. Do not use this apparatus near water.
6. Clean only with a dry cloth.
7. Do not block any ventilation openings. Install in accordance with the manufacturer's instructions.
8. Do not install near any heat sources such as radiators, heat registers, stoves, or other apparatus (including amplifiers) that produce heat.
9. Protect the power cord from being walked on or pinched particularly at plugs, convenience receptacles, and the point where they exit from the apparatus.
10. WARNING: Please refer the information on exterior bottom enclosure for electrical and safety information before installing or operating the apparatus.
11. WARNING: The main plug is used to disconnect the device and should remain readily operable.
12. When not in use, tie up the power cordset with a cable tie or with something similar. It should not be near sharp edges as it may cause abrasion of the power cordset. When put into use again, please make sure the power cordset is not damaged. If any damage is found, please use a replacement power cord specified by the manufacturer or that is identical to the original one.
13. No open flame sources, such as lit candles, should be placed on, under, or near the apparatus.
14. Unplug this apparatus during lightning storms or when unused for long periods of time.
15. Only use attachments/accessories specified by the manufacturer.
16. Use only with the cart, stand, tripod, bracket, or table specified by the manufacturer, or sold with the apparatus. When a cart is used, use caution when moving the cart/apparatus combination to avoid any injury.



17. Refer all servicing to qualified service personnel. Servicing is required when the apparatus has been damaged in any way, such as power-supply cord or plug is damaged, liquid has been spilled or objects have fallen into the apparatus, the apparatus has been exposed to rain or moisture, does not operate normally, or has been dropped.
18. For safe operation of the apparatus, please follow these installation requirements:
    Keep at least 2 inches of ventilation space between the rear cover of the apparatus and the wall. Keep at least 1 inch of ventilation space between the apparatus and all other surfaces. Do not allow any of the apparatus' ventilation openings to be blocked by objects that might obstruct them, such as newspapers, curtains, table-cloths or any other objects. Do not expose the apparatus to any external heat sources. Do not place any heat sources such as candles, lamps, etc. on the apparatus. Do not expose the device to high levels of humidity or to any possible sources of moisture. When disposing of used batteries from the remote control, consult local regulations regarding proper disposal.
19. If an outside antenna or cable system is connected to the product, be sure the antenna or cable system is grounded so as to provide some protection against voltage surges and built-up static charges. Section 810 of the National Electrical Code, ANSI/NFPA No. 70-2011 (Section 54 of Canadian Electrical Code, Part 1) provides information with respect to proper grounding of the mast and supporting structure, grounding of the lead in wire to an antenna-discharge unit, size of grounding conductors, location of antenna discharge unit, connection to grounding electrodes, and requirements for the grounding electrode. See following example:

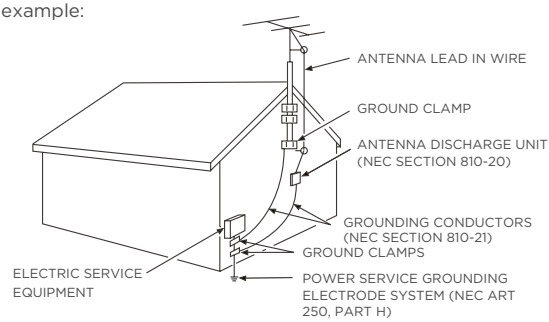

FCC Information

This equipment has been tested and found to comply with the limits for a Class B digital device, pursuant to Part 15 of the FCC Rules. These limits are designed to provide reasonable protection against harmful interference in a residential installation. This equipment generates, uses, and can radiate radio frequency energy and, if not installed and used in accordance with the instructions, may cause harmful interference to radio communications. However, there is no guarantee that interference will not occur in a particular installation. If this equipment does cause harmful interference to radio or television reception, which can be determined by turning the equipment off and on, the user is encouraged to try to correct the interference by one or more of the following measures:

- Reorient or relocate the receiving antenna.
- Increase the separation between the equipment and receiver.
- Connect the equipment into an outlet on a circuit different from that to which the receiver is connected.
- Consult the dealer or an experienced radio/TV technician for help.

This Class B digital apparatus complies with Canadian ICES-003.
The series, include models (65/75/85QM8L)
This device complies with part 15 of the FCC Rules. Operation is subject to the following two conditions:
(1) This device may not cause harmful interference, and
(2) this device must accept any interference received, including interference that may cause undesired operation.
Supplier Name: TTE Technology, Inc. (dba TCL North America)
Supplier Address: 189 Technology Drive, Irvine, CA 92618, USA
Supplier phone number and internet contact information: 1-877-300-9576 support.tcl.com

Battery CAUTION & Disposal Information

1. For best results, use alkaline-type batteries.
2. Do not mix Alkaline, Standard (Carbon-Zinc), or Rechargeable (Nickel Cadmium or Nickel Metal Hydride) batteries.
3. Always replace depleted batteries with two same brand-new batteries from the same manufacturer. Never use damaged batteries.
4. Do not use Rechargeable (Nickel Cadmium or Nickel Metal Hydride) batteries.
5. Install only new batteries of the same type in your product. There is a risk of fire or explosion if the battery is replaced by an incorrect type.
6. Do not mix old and new batteries.
7. Batteries should not be exposed to excessive heat, such as prolonged direct sunlight, open flame, or fire of any kind as it may result in an explosion, or leakage of flammable liquid, or gas.
8. Batteries should not be exposed to extremely low air pressure as it may result in an explosion or the leakage of flammable liquid or gas.
9. Failure to insert batteries in the correct polarity, as indicated in the battery compartment, may shorten the life of the batteries or cause batteries to leak.
10. Batteries should be recycled or disposed of as per state and local guidelines. Do not dispose of batteries in a fire, hot oven, or mechanically crushing or cutting a battery, which may result in an explosion.

ELECTRONICS & PACKAGING RECYCLING INFORMATION

Recycle Your Device Properly. In accordance with state and local laws, this product may be classified as a covered electronic device and must not be disposed of with household trash. TCL encourages consumers to always look for a recycling or reuse alternative to discarding electronic products through drop-off and mail-back options. Visit **tcl.com/us/en/sustainability/electronics-recycling** for instructions and authorized collection sites. Click on our convenient interactive map to quickly locate a solution in your community. For mail-back option, visit **www.mrmrecycling.com/recycle-now.php** and follow the instructions.

Warning: To avoid the danger of suffocation, keep plastic packaging away from babies, children, and pets. Do not use packaging bags in cribs, beds, carriages, or playpens.

Input	Signal Compatibility
Antenna/Cable	480i, 480p, 720p, 1080i (NTSC, ATSC, and QAM formats)
HDMI	480p, 720p/60Hz, 1080p/24/30/50/60/120/144/240/288Hz*, 1440p/60/120/144Hz*, 2160p/24/30/50/60/120/144Hz*

* 144/240/288Hz are supported when VRR (Variable Refresh Rate) and/or High Frame Rate Mode are enabled.

What's in the box

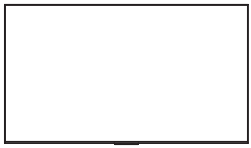

TCL TV



Power cable



Quick Start Guide



2 x AAA batteries for remote

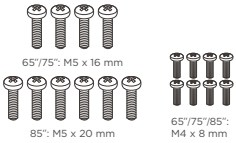

Stand screws



Cable clips



VESA adapters

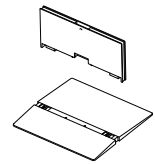

TV stands

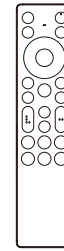

TV remote

What you need

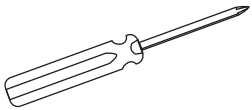

Phillips head screwdriver

Make the most of your TV

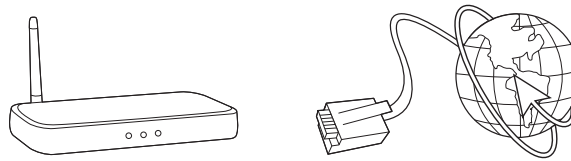

Router + Internet Connection (needed for streaming)

For additional support, please visit support.tcl.com

Step 1 Set up your TV

Ready for the step-by-step? You're only minutes away from TV bliss!

Warning: To avoid the danger of suffocation, keep plastic packaging away from babies, children, and pets. Do not use packaging bags in cribs, beds, carriages, or playpens.

Remove your TV from the box

Be careful, it's heavy!

To use the stand

A Remove the back cover from the vertical stand component as illustrated, then align the vertical stand with the stand plate and secure with the screws from the accessory bag.

B Align the stands with the screw holes located on the TV. Secure the stands to the TV with the remaining stand screws. The stands can be installed at a higher or lower position as illustrated.

C Insert the cable clips as illustrated.

D Route the cables as illustrated.

E Reinstall the back cover to the vertical stand component by aligning the four guide pins with the corresponding holes.

F Stand installation is completed.

Note: Make sure the installation direction of the stand is the same as illustrated. Please remove the protective film after installation.

A

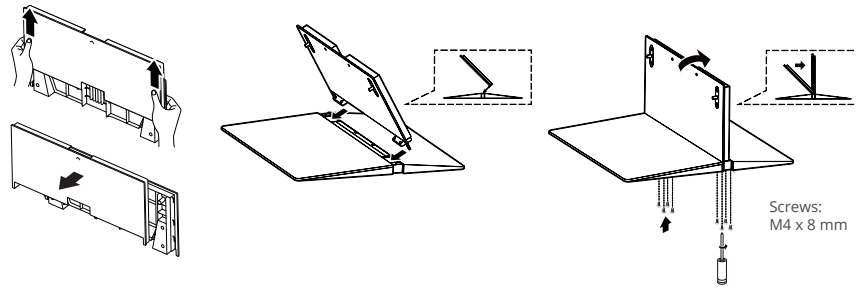

B

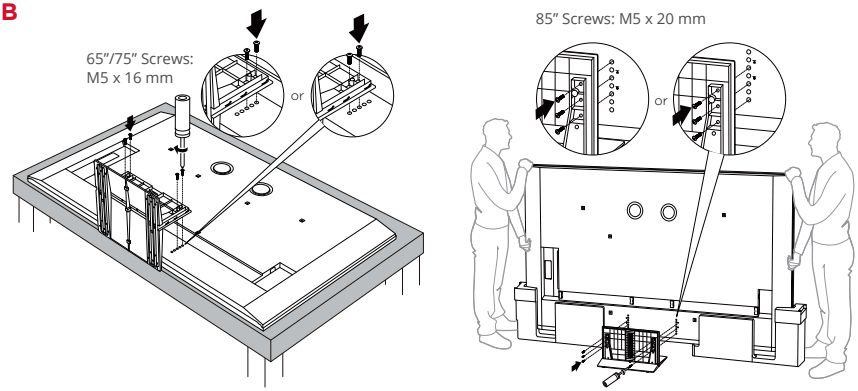

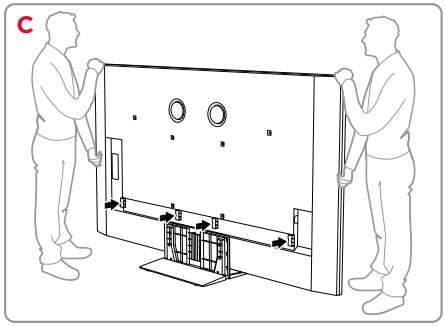

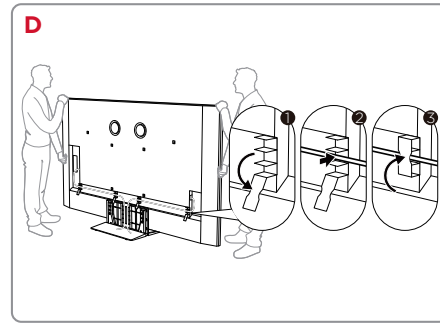

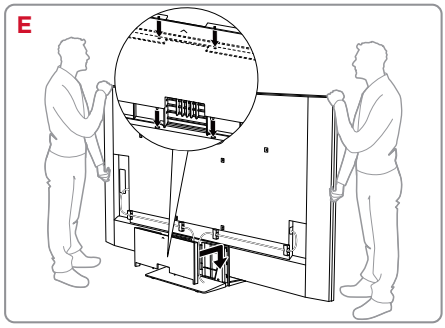

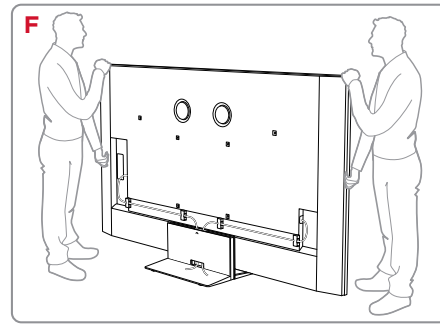

Warning (Stability Hazard):

Never place a television set in an unstable location. A television set may fall, causing serious personal injury or death. Many injuries, particularly to children, can be avoided by taking simple precautions such as:

- Using cabinets or stands recommended by the manufacturer of the television set.
- Only using furniture that can safely support the television set.
- Ensuring the television set is not overhanging the edge of the supporting furniture.
- Not placing the television set on tall furniture (for example, cupboards or bookcases) without anchoring both the furniture and the television set to a suitable support.
- Not placing the television set on cloth or other materials that may be located between the television set and supporting furniture.
- Educating children about the dangers of climbing on furniture to reach the television set or its controls.
- NEVER place items that might encourage children to climb, such as toys and remote controls, on the top of the television or furniture on which the television is placed.
- ALWAYS route cords and cables connected to your television so they cannot be tripped over, pulled or grabbed.

If your existing television set is being retained and relocated, the same considerations as above should be applied.

Optional - To mount on a wall

(Wall mount hardware and accessories are not included.)

To mount on a wall

Preparation must be done before mounting your TV on a wall.

Note: Do not place your TV in a location exposed to direct sunlight, heat, fire, or moisture. Exposure will damage the TV.

1

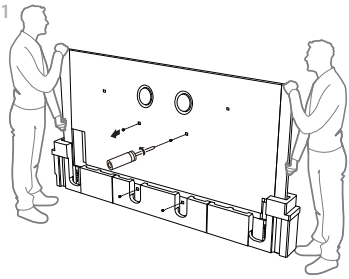

Remove the 4 screws from the back of the TV and store in a safe place.

2

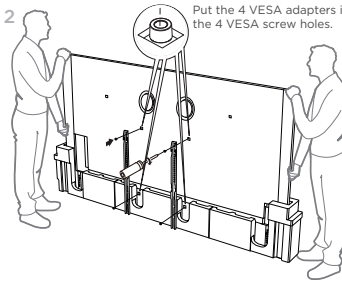

Put the 4 VESA adapters into the 4 VESA screw holes.

Screw the VESA bracket tightly onto the back cover with 4 VESA screws purchased with the wall mount separately.

3

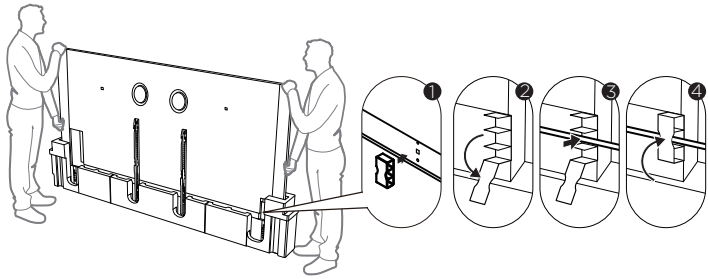

Follow the instructions that come with the wall mount to hang the TV on the wall.

Note: It is optional for you to install the cable clips from the accessory bag.

If you are mounting your TV to the wall, don't attach the stands.

To mount your TV to the wall, purchase a VESA wall mount	
65" Models	Purchase a VESA 300 x 300 mm (4 M6 x 20 mm screws)
75" Models	Purchase a VESA 400 x 400 mm (4 M6 x 20 mm screws)
85" Models	Purchase a VESA 600 x 500 mm (4 M8 x 20 mm screws)

The VESA number is the horizontal and vertical measurement of the mounting holes. For example, 200 x 200 mm refers to the fact that the mounting measurements are 200 mm horizontally and 200 mm vertically.
Follow the instructions that come with the wall mount.

Warnings:

- This product should only be mounted by a professional installer.
- **Never install or mount** this product to the ceiling with the screen side facing down. Installing or mounting this product to the ceiling or the underside of a structure or surface is hazardous and may result in personal injury and/or property damage.

Step 2 Power up

In this step, we'll make sure all systems are a GO!

Connect your power cable to the TV, then plug it into the wall outlet.

Power your TV remote by inserting the included batteries.

If applicable, connect external devices by referencing port label and descriptions on page 10.

A

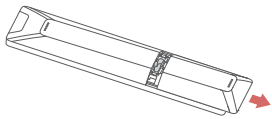

Remove the battery cover from the back of remote control.

B

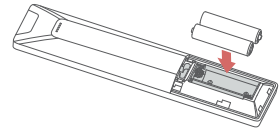

Insert batteries in the correct polarity as indicated in the battery compartment.

C

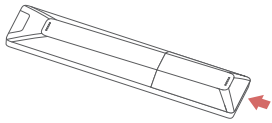

Install the battery cover to the back of remote control.

Power Tip! Always replace depleted batteries with two same brand-new batteries from the same manufacturer. Never use damaged batteries.

If your remote gets warm/hot during use, discontinue use and contact customer support immediately at support.tcl.com.

Review the Battery CAUTION & Disposal Information on page 3.

Step 3 Grab your remote

The TV remote should feel right at home in your hand. We designed it to be incredibly intuitive for watching TV and navigating on-screen menus.

MUTE Press the button to mute the sound

REMOTE MICROPHONE Talk to the remote microphone after pressing the Google Assistant button

POWER Turn TV on and off

INPUT To select input source and display the quick panel

QUICK SETTINGS Open the quick menu

CIRCULAR D-PAD Navigation direction buttons (Up/Down/Left/Right)

OK BUTTON To confirm an entry or selection

BRIGHTNESS Raise and lower brightness

PICTURE MODE To access the picture mode

BACK Return to previous screen

SETTINGS To display the dashboard menu

GOOGLE ASSISTANT BUTTON Press to activate the remote's Google Assistant microphone. Search content through your voice by holding down the button.

HOME To access the TV homepage

LIVE GUIDE Open the Live TV Electronic Programming Guide (EPG)

VOLUME Raise and lower volume

VIRTUAL KEYBOARD To display the on-screen keyboard

INFORMATION In TV source, press to view the program information

CHANNEL To change channels

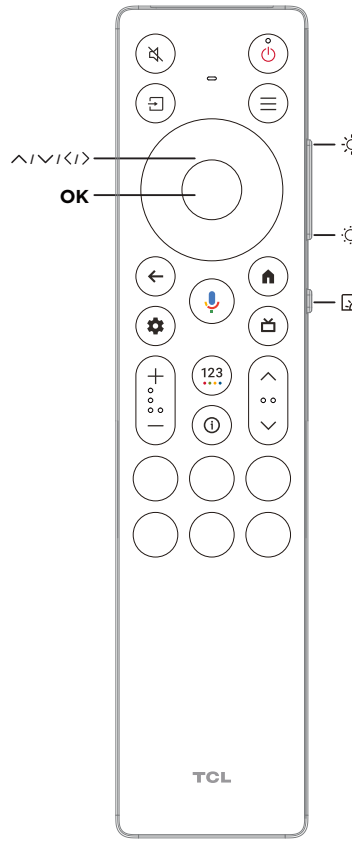

Turning off the remote backlight

By default, the backlight of the remote will automatically activate when lifted. If you want to turn off the backlight, press and hold the SETTINGS button and the BACK button at the same time for 3 seconds. If you want to turn on the backlight again, press and hold the SETTINGS button and the BACK button at the same time for 3 seconds.

Tip! Follow the on-screen guide to pair the remote control with the TV when pressing the button for the first time.

Step 4 Get to know your TV

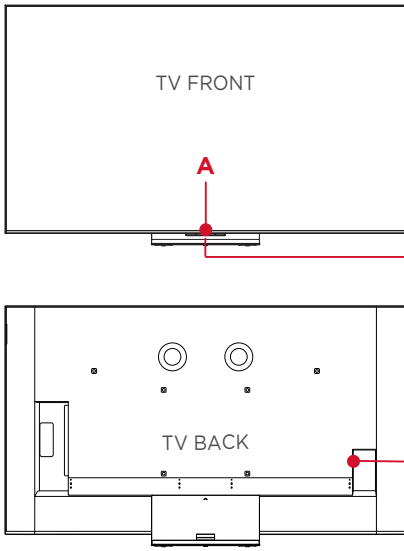

A **STATUS LIGHT OF HANDS-FREE VOICE CONTROL** Glows when you activate the hands-free voice control. (To learn more about the function, go to page 17.)
IR RECEIVER Receives signal from the TV remote.

B **POWER and OPTIONS BUTTON** Press once to open the menu. Short click to change the menu and long click to select.

C **HANDS-FREE VOICE CONTROL MIC SWITCH** Toggle switch to enable or disable the TV's integrated microphone.

D **POWER PORT** Connect your TV to the power source with the included power cable.

E **USB PORT** Connect a USB device to access photos, music and movies. Or connect the optional TCL webcam to chat with friends using supported video call apps.

F **LAN** Connect using an LAN cable to your home network router or switch.

G **HDMI eARC/ARC PORT** Connect HDMI eARC/ARC (audio return channel) capable audio devices like sound bars or AV receivers.

H **HDMI PORTS** Highest quality audio/video connection. Connect cable box, Blu-ray player, gaming console, or other devices to your TV using HDMI cables.

I **ANTENNA/CABLE IN** Connect an outdoor VHF/UHF antenna or Cable TV feed.

J **OPTICAL (DIGITAL AUDIO OUT)** Connect an optical cable to an external digital audio system.

Step 5 Complete guided setup

It’s the final stretch-hurray!

Let’s Connect

Once your language has been selected, you can quickly set up the TV using the Google Home app on your phone.

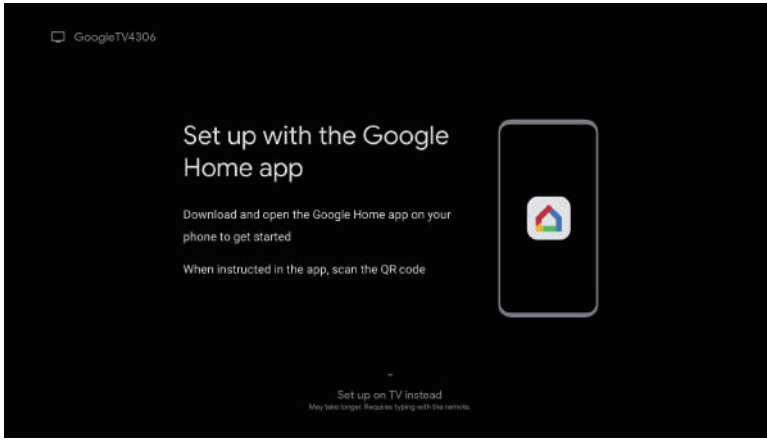

TV interface may vary and is subject to change.
The model number shown will vary depending on your TCL Google TV model number.

Or you can follow the easy on-screen instructions to setup your TV. If you aren’t ready to connect your TV to a wireless network, you can still use it as a regular TV.

To enjoy all smart features and services on your TCL TV with Google TV™, a Google Account, a TCL account, and a reliable broadband internet connection are required.

And setup is done... Congratulations!

Continue using the remote to personalize your Home screen, streaming apps line-up, stream movies, and so much more.

Key things to know:
A paid subscription or other payments may be required for some streaming apps. Streaming apps availability are subject to change and vary by country.

WE ARE READY TO HELP

contact us first with any questions

TCL SUPPORT:
support.tcl.com
1-877-300-9576

TCL North America Limited Product Warranty

All New TCL Product Models including LCD/LED Televisions, Gaming Monitors, Sound Bars, and Appliances including Window Air Conditioners, Portable and Through-The-Wall Air Conditioners, Dehumidifiers, Air Purifiers, and Robot Vacuums (each individually referred to as a "Product" or "Unit", and together referred to as the "Products").

What your warranty covers: Defects in materials or workmanship to the original owner of this TCL Product when purchased as new from an Authorized Dealer of TCL brand Products in the United States or Canada, provided that the Product was properly purchased within the Territories pursuant to all product requirements, instructions, and packaged with this warranty statement.

New Products (Non-Commercial Use)

For how long after your purchase:

- One (1) year from date of purchase or delivery for parts and labor for non-commercial use.

New Products (Commercial Use)

For how long after your purchase:

- Six (6) months from date of purchase or delivery for parts and labor for commercial use.

Commercial use includes, but is not limited to, the use of this Product in a commercial or business environment, the use of this Product in an institution or for institutional purposes, or other commercial purposes including rental purposes.

What we will do

- At TCL's discretion, (1) pay for both labor charges and parts to repair your Product, or (2) replace your Product with a new or refurbished/remanufactured equivalent Product. The decision to repair or replace will be made solely by TCL. See section entitled "How to get service."

How to get service

- Before submitting a request for warranty service, please visit support.tcl.com for helpful FAQs and additional troubleshooting suggestions.
- To get warranty service, contact TCL Customer Support by visiting support.tcl.com. Please have your Proof of Purchase, Product type, model number, serial number, and ZIP code ready. Troubleshooting and prior approval from a TCL representative MUST occur before sending in your Product to a TCL Service Center.
- A representative must troubleshoot your problem over the telephone, via chat, or through e-mail before receiving service. If it is determined that your Unit requires service, the service location will be at the sole discretion of TCL based upon the Limited Warranty Statement. Warranty service shall only be available upon scheduling during regular business hours. TCL shall not be responsible for Customer's inability to schedule warranty service during regular business hours. If Customer either misses or cancels warranty service more than two times with less than twenty-four hours' notice, TCL shall no longer be responsible for warranty service. In order to obtain warranty service, Customer shall reasonably cooperate in providing proof of the issues requiring service, including, but not limited to pictures, videos, and follow the instructions of the technician diagnosing the issue. In the event that Customer is abusive, harassing, vulgar, and/or provides an otherwise unsafe environment for television repair, service, or diagnostics, TCL shall be discharged from any and all limited warranty obligations regarding the Product.
- At the sole discretion of TCL, television screen sizes 43-inches and smaller will either be repaired at an Authorized TCL Service Center or directly exchanged for a new or refurbished/re-certified Unit. At the sole discretion of TCL, television screen sizes 44-inches or larger will either be repaired or directly exchanged for a new or refurbished/re-certified Unit at an Authorized TCL Service Center or in-home. At the sole discretion of TCL, Sound Bars, and Appliances including Window Air Conditioners, Portable and Through-The-Wall Air Conditioners, Dehumidifiers, Air Purifiers, and Robot Vacuums will either be repaired or directly exchanged for a new or refurbished/re-certified Unit at an Authorized TCL Service Center or in-home. In the event of a service visit where the on-site technician, in his-her sole discretion, deems the home or property conditions to be hazardous and/or unsafe, TCL reserves the right to cancel or re-schedule the service visit, or opt for an exchange of the in-warranty Unit for a refurbished/re-certified Unit in lieu of the in-home service visit.
- TCL is not responsible for transportation costs for warranty coverage, including but not limited to Unit repair or replacement, to the Authorized TCL Service Center or TCL-designated address. However, TCL will pay for return shipping to a United States or Canada address only. TCL will provide instructions for packaging and shipping the Unit to the Authorized TCL Service Center or TCL-designated address. Units that are improperly packed and damaged during shipping are not covered under your limited Product warranty.
- Proof of purchase in the form of a bill of sale, receipt, invoice from an Authorized Dealer which is evidence that the Product is within the warranty period must be presented to obtain warranty service. Failure to provide adequate and/or non-fraudulent proof of purchase shall result in denial of a limited warranty claim.
- In the event that a Unit is to be replaced, a picture of the back of the Unit showing the model and serial number and picture of the Product issue itself may be required as well as shipping of the product to TCL prior to replacement.

TCL North America Limited Product Warranty

- If a Unit is replaced, You must check the product within five (5) days of receipt and report any damage to TCL immediately. Failure to do so shall release TCL from any and all claims related to shipping damage. Replacement televisions shall only have limited warranty coverage for the period of time remaining on the original Product's Limited Warranty or thirty (30) days, whichever period is longer.
- PRE-AUTHORIZATION MUST BE OBTAINED BEFORE (1) SENDING ANY PRODUCT TO AN AUTHORIZED TCL SERVICE CENTER, OR (2) OBTAINING ANY IN-HOME REPAIR/REPLACEMENT/RENTAL SERVICES.

What your warranty does not cover

Property damage, malfunction, or failure of the Product or related system, or personal injury caused by or resulting from:

- A Unit sold in "As-Is", "Used", "Factory Reconditioned", "Factory Re-Certified", or "Refurbished", condition or with faults.
- Damage caused by transportation or handling, storage, onsite construction, transit, including damage during shipment from a Retailer (please contact your Retailer for assistance).
- Operating the Product in incomplete or unfinished structures
- Improper sizing, selection or specification of the Product
- Improper or deferred maintenance contrary to TCL's schedule or instructions
- Extended Service Plans purchased from Retailers. Please contact your Retailer and/or your extended service plan provider for assistance.
- Customer installation including Products used in any manner contrary to the Product documentation. (Your Owner's Manual describes how to install, adjust, and operate your Unit. Any additional information should be obtained from your Authorized Dealer).
- Service calls to your home for delivery or pick-up, installation, instruction, replacement of house fuses, connection of house wiring or plumbing, or to correct unauthorized repairs.
- Installation and related adjustments, or damage resulting from installation, repair, or service.
- Damage resulting from non-approved installation or repair methods.
- Failure of the Product to perform due to wireless signal reception problems not caused by your Unit, or due to power failures or interruptions, or inadequate electrical service.
- Malfunctioning pixels of less than two malfunctioning pixels per million pixels as detailed in TCL's Pixel Policy.
- Damage from misuse, abuse, neglect, insects, normal wear and tear, cosmetic damage, mishandling, faulty installation, inadequate wireless signal reception, inadequate electrical wiring, or power line surges.
- Physical abuse or misuse of the Product (including failure to perform any scheduled maintenance as described in the Product documentation such as air filter cleaning, or any Product damaged by excessive physical or electrical stress).
- Damage caused by operating the Product in a corrosive or wet environment, including those containing chlorine, fluorine or any other hazardous or harmful chemicals or environmental factors
- Operating the Product in environments with excessive or harmful volatile organic compounds (VOCs), improper air makeup or supply, or with inadequate ventilation.
- Markings or images on the television's panel resulting from viewing fixed images (including but not limited to certain 4:3 images on wide screen televisions, or data or images in fixed screen locations from banners, video games, or certain broadcast networks).
- Units that have original factory serial numbers that are unreadable or missing, or that have been changed, defaced, or altered in any manner.
- Batteries.
- A television that has been modified or incorporated into other Products, or that has had the serial number removed or altered.
- Use of accessories or components that are not compatible with this Product.
- A Unit purchased or serviced outside of the United States or Canada.
- Costs of shipping the Unit to the Authorized TCL Service Center or TCL-designated address. TCL will pay for return shipping to the customer to a United States or Canada address only.
- Events of force majeure or damage caused by other factors such as earthquakes, fires, lightning, hail, wind, freezing, flooding, standing, pooling, or ponding water, power surges, fluctuations in or interruptions of electrical power, rodents, vermin, insects, or other animal-or-pest related issues.
- Acts of nature or God (as illustrative examples and for the avoidance of doubt, such acts of nature or God include but are not limited to damage caused by earthquakes, fires, lightning, or flood whether caused by nature or humans).
- Special, incidental, or consequential damages.

This Limited Warranty Also Excludes

- Labor or any other costs incurred for service, maintenance, repair, removing, replacing, installing, complying with local building and electrical codes, or shipping or handling of defective or replacement Products or parts (except as expressly provided in Section 1.b. above);
- Consumable items, such as air filters and refrigerant (if applicable);

TCL North America Limited Product Warranty

- Service calls where no defect is found;
- Product installation, set-up, and related adjustments;
- Adjustments of user controls
- Products purchased or installed outside of the Territories or purchased from any person, entity, or source not expressly authorized by TCL;
- Products with missing or unreadable original factory serial numbers or that have had the original factory serial number or any part thereof changed, altered, defaced, removed, or otherwise modified in any manner; and
- Peripheral third party components connected to the Product, such as DVD players, gaming systems, cable/satellite boxes, streaming sticks, refrigerant piping, electrical wiring, pumps, valves, controls, accessories, etc.
- Issues arising from the operating system, quality or speed of internet service or Wi-Fi, video quality issues, or use/performance of third-party applications. This includes all video applications and similar services. In such cases, the warranty does not apply, and support should be sought from the respective service or platform provider.

LIMITATION OF WARRANTY

- EXCEPT AS OTHERWISE PROVIDED IN THIS LIMITED WARRANTY, TCL MAKES NO OTHER WARRANTIES OF ANY KIND WHATSOEVER REGARDING THE PRODUCT. NO VERBAL OR WRITTEN INFORMATION GIVEN BY TTE TECHNOLOGY, INC. DBA TCL NORTH AMERICA, ITS AGENTS OR EMPLOYEES SHALL CREATE A GUARANTY OR IN ANY WAY INCREASE OR MODIFY THE SCOPE OF THIS WARRANTY. NO ONE IS AUTHORIZED TO CHANGE THIS LIMITED WARRANTY IN ANY RESPECT OR TO CREATE ANY OTHER OBLIGATION OR LIABILITY FOR TCL IN CONNECTION WITH THE PRODUCT. TCL DISCLAIMS AND EXCLUDES ALL WARRANTIES NOT EXPRESSLY PROVIDED HEREIN AND ALL REMEDIES WHICH, BUT FOR THIS PROVISION, MIGHT ARISE BY IMPLICATION OR OPERATION OF LAW. ANY AND ALL IMPLIED WARRANTIES INCLUDING WARRANTIES OF MERCHANTABILITY AND OF FITNESS FOR A PARTICULAR PURPOSE ARE EXPRESSLY LIMITED TO A TERM EQUAL TO THE TERM OF THIS LIMITED WARRANTY. SOME STATES DO NOT ALLOW LIMITATIONS ON HOW LONG AN IMPLIED WARRANTY LASTS, SO THE ABOVE LIMITATION MIGHT NOT APPLY TO YOU. TCL DISCLAIMS ALL LIABILITY FOR THE ACTS, OMISSIONS, AND CONDUCT OF ALL THIRD PARTIES (INCLUDING BUT NOT LIMITED TO THE INSTALLING OR SERVICING CONTRACTOR, ANY DISTRIBUTOR, OR DEALER) IN CONNECTION WITH OR RELATED TO THE PRODUCT.
- UNDER NO CIRCUMSTANCES SHALL TCL BE LIABLE FOR ANY INDIRECT, INCIDENTAL, SPECIAL, PUNITIVE, OR CONSEQUENTIAL DAMAGES INCLUDING, WITHOUT LIMITATION, INFRINGEMENT OF THIRD PARTY RIGHTS, LOST GOODWILL, LOST REVENUES OR PROFITS, WORK STOPPAGE, PRODUCT FAILURE, IMPAIRMENT OF OTHER GOODS, COSTS OF REMOVAL AND REINSTALLATION OF THE PRODUCT, LOSS OF USE, INJURY TO PERSONS OR PROPERTY ARISING OUT OF OR RELATED TO THE PRODUCT WHETHER BASED ON BREACH OF WARRANTY, BREACH OF CONTRACT, TORT OR OTHERWISE, EVEN IF TCL HAS BEEN ADVISED OF THE POSSIBILITY OF SUCH DAMAGE. IN NO EVENT SHALL TCL'S LIABILITY EXCEED THE ACTUAL PURCHASE PRICE OF THE PRODUCT WITH RESPECT TO WHICH ANY CLAIM FOR THE PRODUCT IS MADE.
- REPAIR OR REPLACEMENT AS PROVIDED UNDER THIS WARRANTY IS THE EXCLUSIVE REMEDY OF THE CONSUMER. TTE TECHNOLOGY, INC. DBA TCL NORTH AMERICA SHALL NOT BE LIABLE FOR SPECIAL, INCIDENTAL, OR CONSEQUENTIAL DAMAGES RESULTING FROM THE USE OF THIS PRODUCT OR ARISING OUT OF ANY BREACH OF ANY EXPRESS OR IMPLIED WARRANTY ON THIS PRODUCT. THIS DISCLAIMER OF WARRANTIES AND LIMITED WARRANTY ARE GOVERNED BY THE LAWS OF THE STATE OF CALIFORNIA. EXCEPT TO THE EXTENT PROHIBITED BY APPLICABLE LAW, ANY IMPLIED WARRANTY OF MERCHANTABILITY OR FITNESS FOR A PARTICULAR PURPOSE ON THIS PRODUCT IS LIMITED TO THE APPLICABLE WARRANTY AND WARRANTY PERIOD SET FORTH ABOVE. THIS WARRANTY IS SUBJECT TO CHANGE WITHOUT NOTICE. PLEASE VISIT WWW.TCL.COM TO VIEW THE MOST CURRENT VERSION.
- EXCEPT WHERE PROHIBITED BY LAW, ALL DISPUTES BETWEEN YOU AND TCL ARISING OUT OF OR RELATING IN ANY WAY TO THIS LIMITED WARRANTY OR THE PRODUCT SHALL BE RESOLVED EXCLUSIVELY THROUGH BINDING ARBITRATION, AND NOT IN A COURT OF GENERAL JURISDICTION. BINDING ARBITRATION MEANS THAT YOU AND TCL ARE EACH WAIVING THE RIGHT TO A COURT HEARING, RIGHT TO A JURY TRIAL, AND RIGHT TO BRING OR PARTICIPATE IN A CLASS ACTION. PLEASE CAREFULLY REVIEW THE DISPUTE RESOLUTION PROVISIONS BELOW, WHICH ALSO DESCRIBE YOUR RIGHT TO OPT-OUT.
- In the event of a dispute, you must first notify TCL in writing at least 30 days before initiating any arbitration proceeding by sending a letter to TCL at TTE Technology, Inc., Attn: Legal Department, 189 Technology Drive, Irvine, CA 92620. The notice must provide your name, address, and telephone number; identify the Product that is the subject of the claim; and describe the nature of the claim and the relief being sought. If you and TCL are unable to resolve the dispute within 60 days, either party may proceed to file a claim for binding arbitration. Unless you opt-out as provided below, all claims must be brought in the parties' individual capacity, and not as a plaintiff or class member in any purported class or representative proceeding. Further, you agree that, except as specifically provided herein, the arbitrator may not consolidate proceedings of

more than one person's claims and may not otherwise preside over any form of a representative or class proceeding. This waiver applies to class arbitration unless such arbitration is necessary to effectuate the enforcement of the class action waiver or in the event that TCL expressly agrees to class arbitration. Instead of arbitration, either party may bring an individual action in small claims court if the dispute qualifies under the monetary limitations for small claims court proceedings, but that small claims court action may not be brought on a class or representative basis.

- The arbitration will be administered by the American Arbitration Association ("AAA") before a single arbitrator under the AAA's Consumer Arbitration Rules and Mediation Procedures that are in effect at the time the arbitration is initiated (referred to as the "AAA Rules") and under the procedures set forth in this section. The AAA Rules are available online at www.adr.org/consumer. Send a copy of your written demand for arbitration, as well as a copy of this provision, to the AAA in the manner described in the AAA Rules. You must also send a copy of your written demand to TCL at TTE Technology, Inc., Attn: Legal Department, 189 Technology Drive, Irvine, CA 92620. You and TCL shall follow the AAA Rules applicable to initial filing fees, but in no event will you be responsible for any portion of those fees in excess of the filing or initial appearance fees applicable to state or federal court actions in the jurisdiction where the arbitration will be conducted. The arbitration will be conducted virtually, unless you and TCL agree otherwise or the arbitrator orders an in-person hearing. If there is a conflict between the AAA Rules and the rules set forth in this section, the rules set forth in this section will govern. This arbitration provision is governed by the Federal Arbitration Act. Judgment may be entered on the arbitrator's award in any court of competent jurisdiction.
- You may opt-out of the foregoing arbitration and class action/jury trial waiver provision by sending writing notification to TCL in writing within thirty (30) days of the original purchase at TTE Technology, Inc., Attn: Legal Department, 189 Technology Drive, Irvine, CA 92620. Such notification must include your name and address, your warranted Product's model and serial number, the date of purchase, and a clear statement of your intent to opt-out of this dispute resolution procedure. No other form of notice will be effective to opt-out of this dispute resolution procedure. Opting out of this dispute resolution procedure will not affect the coverage of the Limited Warranty in any way, and you will continue to enjoy the full benefits of the Limited Warranty. If you keep this Product and do not opt out, then you accept all terms and conditions of the dispute resolution procedure described above.

How State Law relates to this warranty

- Some states or provinces do not allow limitations on warranties or exclusions or limitation of damages or limitations on how long an implied warranty lasts, so the above limitations or exclusions may not apply to you. Some states do not allow limitations on how long an implied warranty lasts, so the above limitation might not apply to you. TCL disclaims all liability for the acts, omissions, and conduct of all third parties (including but not limited to the installing or servicing contractor, any distributor, or dealer) in connection with or related to the product.
- This warranty gives you specific legal rights, and you also may have other rights that vary from state to state or province to province.
- If you purchased your Unit outside of the United States or Canada or seek warranty service coverage outside of the United States or Canada, this warranty does not apply. Contact your dealer for warranty information. Service calls which do not involve defective materials or workmanship are not covered by this limited warranty. Costs of such service calls are the sole responsibility of the purchaser.
- This Limited Warranty is not transferable to subsequent purchasers or anyone else who may acquire an interest in the Product unless the original purchaser is a resident of Texas or Florida and complies with this provision. Residents of Texas and Florida may transfer the rights under this Limited Warranty ONLY if the Product is transferred to a subsequent purchaser as part of an agreement between the original purchaser and a subsequent purchaser of the sale of the entire residence in which the Product was first installed. This provision does not in any way extend or modify the length of time this Limited Warranty applies, and the subsequent purchaser's warranty duration shall match that of the original purchaser.
- If any term or provision of this Limited Warranty is invalid, illegal, or unenforceable in any jurisdiction, such invalidity, illegality, or unenforceability shall not affect any other term or provision of this Limited Warranty or invalidate or render unenforceable such term or provision in any other jurisdiction.
- TCL reserves the right to amend or modify this Limited Warranty from time to time without notice. Please visit www.TCL.com to view the most current version of this Limited Warranty.

Broadcasting & Operating Environment

Broadcasting system	US System NTSC-M ATSC standard (8VSB), QAM	
Receiving Channels	VHF2-13 UHF14-69 CATV	14-36 (A)-(W) 37-59 (AA)-(WW) 60-85 (AAA)-(ZZZ) 86-94 (86)-(94)95-99 (A-5)-(A-1) 100-135 (100)-(135) 01 (4A)
Tuner type	Frequency synthesized	
Operating Temperature	5°C to 35°C (41°F to 95°F)	
Operating Humidity	20% to 80%, non-condensing	
Storage Temperature	-15°C to 45°C (5°F to 113°F)	
Storage Humidity	10% to 90%, non-condensing	

The terms HDMI, HDMI High-Definition Multimedia Interface, HDMI Trade Dress and the HDMI Logos are trademarks or registered trademarks of HDMI Licensing Administrator, Inc.

Dolby, Dolby Vision, Dolby Vision IQ, Dolby Atmos, Dolby Audio and the double-D symbol are trademarks of Dolby Laboratories Licensing Corporation. Manufactured under license from Dolby Laboratories. Confidential unpublished works. Copyright © 1992–2024 Dolby Laboratories. All rights reserved.

The Bluetooth® word mark and logos are registered trademarks owned by Bluetooth SIG, Inc. and any use of such marks by TTE Corporation is under license. Other trademarks and trade names are those of their respective owners.

Manufactured under license from DTS, Inc. and/or its affiliates. For patents, see https://xperi.com/dts-patents/. DTS, the DTS logo, DTS:X, and the DTS:X logo are trademarks or registered trademarks of DTS, Inc. and/or its affiliates in the U.S. and/or other countries. © DTS, Inc. and/or its affiliates. All rights reserved.

Manufactured under license from IMAX Corporation. IMAX® is a registered trademark of IMAX Corporation in the United States and/or other countries. For DTS patents, see http://patents.dts.com. Manufactured under license from DTS Licensing Limited. DTS and the DTS logo are registered trademarks or trademarks of DTS, Inc. in the United States and other countries. © 2020 DTS, Inc. ALL RIGHTS RESERVED.

Covered by one or more claims of the HEVC patents listed at patentlist.accessadvance.com.

Apple, AirPlay, Apple Home, and HomeKit are trademarks of Apple Inc., registered in the U.S. and other countries and regions.
Use of the Works with Apple badges means that an accessory has been designed to work specifically with the technology identified in the badges and has been certified by the developer to meet Apple performance standards.

Note:
Figures and illustrations in this QSG are provided for reference only and may differ from actual product appearance. Product design and specifications may be changed without notice.
The Depth (D) of Product Dimensions Without stand on the carton box is measured from the panel to the overall surface of the back cover, not including any protrusions.

Troubleshooting

Having trouble completing the guided setup? Don't worry, it's usually an easy fix.

Cannot connect to wireless network (WiFi)

- Select the correct wireless network name and verify the password entered (case sensitive).
- Relocate the router from objects that interfere with performance (cordless phones, baby monitors, etc.).
- Reboot the router by disconnecting the power for more than 2 minutes and reconnect.

Problems connecting my cable box or antenna through a coax cable

- For best performance, use the HDMI connection. If not available, then:
- Make sure the cable connections to the TV and your device are securely fastened.
- Select cable or antenna input.
- Select the channel scan menu and follow the on-screen instructions to perform a full channel scan.

What is the remote code for programming my Universal or Cable box remote control?

- Please visit https://go.tcl.com/codes

How to update Parental Control password

- Select "All settings" from the home screen.
- Select "System".
- Select "Parental Controls" to set up or change your personal password.

Notes:

- You can set up your personal password anytime.
- If you forget your personal password, you can use 0423 to reset.

How do I turn Text-to-Speech (TTS) on or off?

- Select "All settings" from the home screen.
- Select "Accessibility".
- Select "TalkBack".
- Select "Enable" and press OK to turn it on or off.
- For more information visit: https://go.tcl.com/tts-atv

How to use voice control through the remote control?

- In Google TV mode, press and hold the "HOME" and "OK" buttons on your remote at the same time.
- Keep your remote within 3 ft. of your TV during the pairing process.
- Then, when the TV display shows that the Google Assistant is ready – speak towards the remote microphone by holding down the Google Assistant button to ask a question or try a suggestion.

How to use hands-free voice control?

Notes:

- Make sure the hands-free voice control mic switch (refer to page 10 for its position) is turned on before using this function.

- Ensure your smart TV is connected to the internet for Google Assistant to work.

- In Google TV mode, press the Google Assistant button on your remote.
- Select "Yes, I'm in".
- Say "OK Google" or "Hey Google" to activate the hands-free voice assistant without using the remote control.
- Speak towards the TV to ask a question or try a suggestion.

Need more help?

support.tcl.com

1-877-300-9576

Home Theater, Made Simple.

Complete your Home Theater Experience with a TCL Sound Bar!

Offering an all new immersive 7.1.4 surround experience, enjoy superior sound with Dolby Atmos® and DTS:X™ with up-firing speakers in the sound bar and satellite speakers.

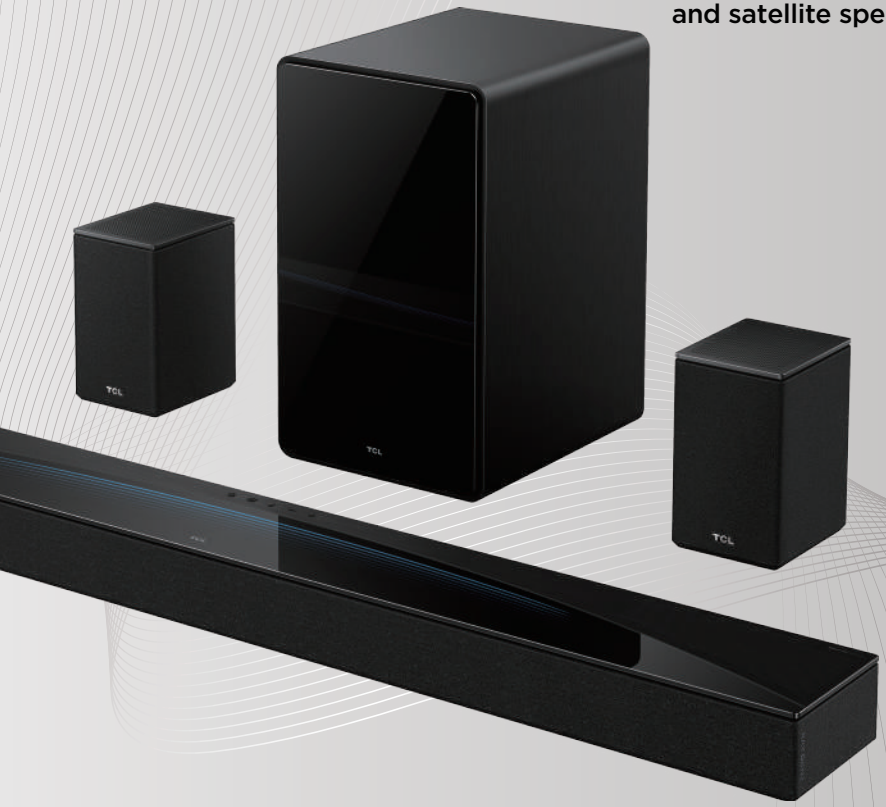

Q85H

Learn more at TCL.com or visit your favorite retailer.

TCL

Copyright © 2023 by TCL. All rights reserved.
TCL and the TCL Logo are owned by TCL Corporation and under license to TCL North America. Other brand and product names are the trademarks or registered trademarks of their respective owners.

TCL North America
189 Technology Drive, Irvine, CA 92618, USA

J0104-001618