User Guide

For United States

English

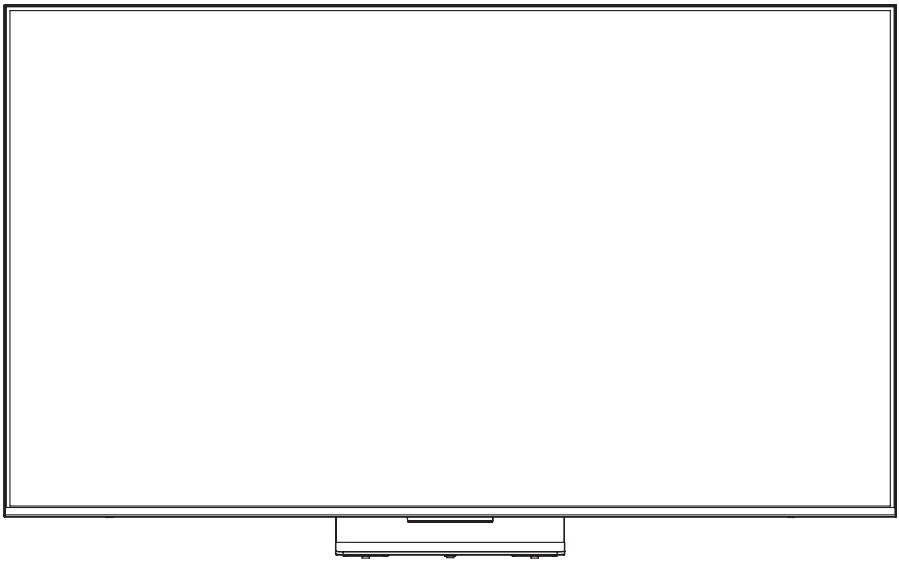

TCL and the TCL Logo are owned by TCL Corporation and under license to TCL North America. Other brand and product names are the trademarks or registered trademarks of their respective owners.

To enjoy all smart features and services on your TCL TV with Google TV™, a Google Account, a TCL account, and a reliable broadband internet connection are required.

Illustrations in this guide are provided for reference only and may differ from actual product appearance. Product design and specifications may be changed without notice.

Contents

Important Information 3
Important Safety Instructions 4

Connections and setup

Before initial setup 6
Protect against power surges 6
Safety information 6
Avoid audio interference 6
Avoid direct light 6
Set up your new TV 8
What's in the box 8
To mount on a wall 9
To use the stand 10
To use the cable clips 11
Connect to the Internet 12
Network settings 12
Switch the TV on and off 13
Initial setup 13

Basic TV operations

Accessing channels 14
Watching connected devices 14
Adjusting volume 14
Using the power button on your TV 14
Accessing TV homepage 15
Using TV settings menu 16

Adjusting your TV

Channels & Inputs 17
Display & Sound 18
System 21

Other information

Password in Parental Control 22
Troubleshooting 22
Broadcasting & Operating Environment 23
Battery CAUTION & Disposal Information 23
ELECTRONICS & PACKAGING RECYCLING INFORMATION 24
Legal Statement 25
TCL North America Limited Product Warranty 26

Important Information

CAUTION
RISK OF ELECTRIC SHOCK.
DO NOT OPEN.

Caution: To reduce the risk of electric shock, do not remove cover (or back). No user serviceable parts inside. Refer servicing to qualified service personnel.



This symbol indicates that this product incorporates double insulation between hazardous main voltage and user accessible parts. When servicing, use only identical replacement parts.



This symbol indicates that the fuse may be in the neutral, and that the mains shall be disconnected to de-energize the phase conductors.



This symbol indicates “dangerous voltage” inside the product that presents a risk of electric shock or personal injury.



This symbol indicates important instructions accompanying the product.

WARNING

To reduce the risk of fire or electric shock, do not expose this product to rain or moisture. This product should not be exposed to dripping or splashing. No objects filled with liquids, such as vases, should be placed on the apparatus.

The TV is unstable if it is not properly attached to the base or mounted to the wall. Please follow the base or wall mounting instructions provided in the User’s Guide to ensure your safety.

The batteries should not be exposed to excessive heat, such as prolonged direct sunlight, open flame, or fire of any kind. Refer to the identification/rating label located on the back panel of your product for its proper operating voltage.

Cable TV Installer: This reminder is provided to call your attention to Article 820-40 of the National Electrical Code (Section 54 of the Canadian Electrical Code, Part 1) which provides guidelines for proper grounding and, in particular, specifies that the cable ground should be connected to the grounding system of the building as close to the point of cable entry as practical.

Important: This television is a table model and is designed to sit on a firm, flat surface. Do not place the TV on soft carpeting or on a similar surface as this may cause the ventilation slots located on the bottom of the unit to be blocked and may result in reduced product lifespan from overheating To assure adequate ventilation for this product, maintain a spacing of one (1) inch from the top and side of the TV receiver and two (2) inches from the rear of the TV receiver and other surfaces.

Make sure the TV stand or base you use is of adequate size and strength to prevent the TV from being accidentally tipped over, pushed off, or pulled off. This may cause personal injury and/or damage the TV. Refer to the Important Safety Instructions on the next page.

The Power button ⏻ on this TV and your remote control puts the TV into a very low-power standby mode but will not completely turn the power off. In order to completely shut the power off, you will need to disconnect the power cord from the outlet. The mains plug/appliance coupler is used to completely turn off the device. If you prefer to completely turn off the device, you should install the TV in a manner that allows you to disconnect the power cord when desired.

Warning: Changes or modifications to this unit not expressly approved by the party responsible for compliance could void the user’s authority to operate the equipment. Keep the apparatus at least 8 inches away from the human body.

For the best viewing experience, remove the energy guide label from the TV front panel or TV screen before use.

Important Safety Instructions

1. Read these instructions.
2. Keep these instructions.
3. Heed all warnings.
4. Follow all instructions.
5. Do not use this apparatus near water.
6. Clean only with a dry cloth.
7. Do not block any ventilation openings. Install in accordance with the manufacturer's instructions.
8. Do not install near any heat sources such as radiators, heat registers, stoves, or other apparatus (including amplifiers) that produce heat.
9. Protect the power cord from being walked on or pinched particularly at plugs, convenience receptacles, and the point where they exit from the apparatus.
10. WARNING: Please refer the information on exterior bottom enclosure for electrical and safety information before installing or operating the apparatus.
11. WARNING: The main plug is used to disconnect the device and should remain readily operable.
12. When not in use, tie up the power cordset with a cable tie or with something similar. It should not be near sharp edges as it may cause abrasion of the power cordset. When put into use again, please make sure the power cordset is not damaged. If any damage is found, please use a replacement power cord specified by the manufacturer or that is identical to the original one.
13. No open flame sources, such as lit candles, should be placed on, under, or near the apparatus
14. Unplug this apparatus during lightning storms or when unused for long periods of time.
15. Only use attachments/accessories specified by the manufacturer.
16. Use only with the cart, stand, tripod, bracket, or table specified by the manufacturer, or sold with the apparatus. When a cart is used, use caution when moving the cart/apparatus combination to avoid any injury.
17. Refer all servicing to qualified service personnel. Servicing is required when the apparatus has been damaged in any way, such as power-supply cord or plug is damaged, liquid has been spilled or objects have fallen into the apparatus, the apparatus has been exposed to rain or moisture, does not operate normally, or has been dropped.
18. For safe operation of the apparatus, please follow these installation requirements:
    Keep at least 2 inches of ventilation space between the rear cover of the apparatus and the wall
    Keep at least 1 inch of ventilation space between the apparatus and all other surfaces. Do not allow any of the apparatus' ventilation openings to be blocked by objects that might obstruct them, such as newspapers, curtains, table-cloths or any other objects. Do not expose the apparatus to any external heat sources. Do not place any heat sources such as candles, lamps, etc. on the apparatus. Do not expose the device to high levels of humidity or to any possible sources of moisture. When disposing of used batteries from the remote control, consult local regulations regarding proper disposal.

19. If an outside antenna or cable system is connected to the product, be sure the antenna or cable system is grounded so as to provide some protection against voltage surges and built-up static charges. Section 810 of the National Electrical Code, ANSI/NFPA No. 70-2011 (Section 54 of Canadian Electrical Code, Part 1) provides information with respect to proper grounding of the mast and supporting structure, grounding of the lead in wire to an antenna-discharge unit, size of grounding conductors, location of antenna discharge unit, connection to grounding electrodes, and requirements for the grounding electrode.
    See following example:

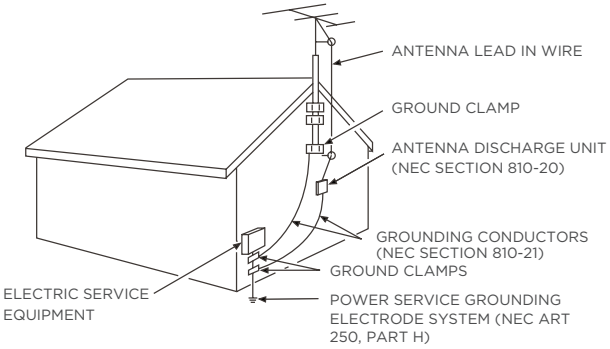

Connections and setup

Before initial setup

Protect against power surges

- Connect all components before you plug any power cords into the wall outlet or power strip.
- NEVER plug your TV into an outlet that is controlled by a wall switch.
- Turn off the TV before you connect or disconnect any cables.
- Make sure all antennas and cables are properly grounded. Refer to the Important Safety Instructions.

Safety information

- Prevent TV from overheating by placing in an area with good ventilation.
- Do not block ventilation holes on the TV. Position the TV so air can circulate freely on all sides.
- Do not stack objects on the TV.
- If you place the TV on a stand, make sure you allow adequate ventilation.
- If you connect an audio receiver or amplifier to the TV, place it on the top shelf so the heated air will not overheat the TV.

Avoid audio interference

- Position cables properly; insert each cable firmly into the designated jack.
- Route all cables down one side of the back of the TV instead of straight down the middle.
- If your antenna uses 300-ohm twin lead cables, do not coil the cables.
- Keep twin lead cables away from audio/video cables.

Avoid direct light

- Do not place the TV where sunlight or room lighting is directed toward the screen. Use soft or indirect lighting.

The terms HDMI, HDMI High-Definition Multimedia Interface, HDMI Trade Dress and the HDMI Logos are trademarks or registered trademarks of HDMI Licensing Administrator, Inc.

Dolby, Dolby Vision, Dolby Vision IQ, Dolby Atmos, Dolby Audio and the double-D symbol are trademarks of Dolby Laboratories Licensing Corporation. Manufactured under license from Dolby Laboratories. Confidential unpublished works. Copyright © 1992–2024 Dolby Laboratories. All rights reserved.

The Bluetooth® word mark and logos are registered trademarks owned by Bluetooth SIG, Inc. and any use of such marks by TTE Corporation is under license. Other trademarks and trade names are those of their respective owners.

Manufactured under license from DTS, Inc. and/or its affiliates. For patents, see https://xperi.com/dts-patents/. DTS, the DTS logo, DTS:X, and the DTS:X logo are trademarks or registered trademarks of DTS, Inc. and/or its affiliates in the U.S. and/or other countries. © DTS, Inc. and/or its affiliates. All rights reserved.

Manufactured under license from IMAX Corporation. IMAX® is a registered trademark of IMAX Corporation in the United States and/or other countries. For DTS patents, see http://patents.dts.com. Manufactured under license from DTS Licensing Limited. DTS and the DTS logo are registered trademarks or trademarks of DTS, Inc. in the United States and other countries. © 2020 DTS, Inc. ALL RIGHTS RESERVED.

Covered by one or more claims of the HEVC patents listed at patentlist.accessadvance.com.

Apple, AirPlay, Apple Home, and HomeKit are trademarks of Apple Inc., registered in the U.S. and other countries and regions.
Use of the Works with Apple badges means that an accessory has been designed to work specifically with the technology identified in the badges and has been certified by the developer to meet Apple performance standards.

FCC Information

This equipment has been tested and found to comply with the limits for a Class B digital device, pursuant to Part 15 of the FCC Rules. These limits are designed to provide reasonable protection against harmful interference in a residential installation. This equipment generates, uses, and can radiate radio frequency energy and, if not installed and used in accordance with the instructions, may cause harmful interference to radio communications. However, there is no guarantee that interference will not occur in a particular installation. If this equipment does cause harmful interference to radio or television reception, which can be determined by turning the equipment off and on, the user is encouraged to try to correct the interference by one or more of the following measures:

- Reorient or relocate the receiving antenna.
- Increase the separation between the equipment and receiver.
- Connect the equipment into an outlet on a circuit different from that to which the receiver is connected.
- Consult the dealer or an experienced radio/TV technician for help.

This Class B digital apparatus complies with Canadian ICES-003.

The series, include models (55/65/75/85QM7L)

This device complies with part 15 of the FCC Rules. Operation is subject to the following two conditions:

(1) This device may not cause harmful interference, and

(2) this device must accept any interference received, including interference that may cause undesired operation.

Supplier Name: TTE Technology, Inc. (dba TCL North America)

Supplier Address: 189 Technology Drive, Irvine, CA 92618, USA

Supplier phone number and internet contact information: 1-877-300-9509 support.tcl.com

Set up your new TV

Open the box and remove the TV and other items. Be careful, the TV may be heavy! We strongly recommend that at least two people unbox the TV.

Be sure to check all the foam packaging as the stands from some TV's are stored in the foam for protection.

Warning: To avoid the danger of suffocation, keep plastic packaging away from pets, babies, and children. Do not use packaging bags in cribs, beds, carriages, or playpens.

What's in the box

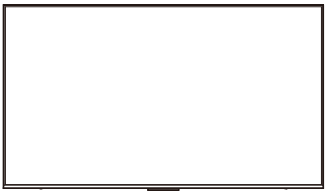

TCL TV

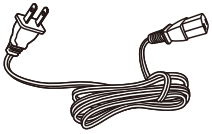

Power cable

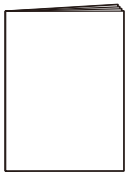

Quick Start Guide

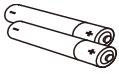

2 x AAA batteries for remote

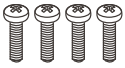

55"/75": M5x16mm

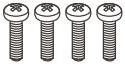

65": M5x20mm



85": M5x20mm



55"/65"/75"/85": M4x8mm

Stand screws



55"/65"

VESA adapters



Cable clips

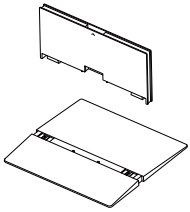

TV stands

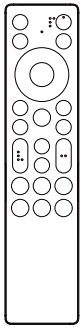

TV remote

To mount on a wall

If you are mounting your TCL Google TV to the wall, do not attach the TV base stand or TV stand column.

To mount your TV to the wall, purchase a VESA wall mount according to these specifications:

- **55" model** VESA 300x300, 4 M6x20mm screws
- **65" model** VESA 300x300, 4 M6x20mm screws
- **75" model** VESA 300x300, 4 M6x16mm screws
- **85" model** VESA 600x400, 4 M8x20mm screws

The VESA number is the horizontal and vertical measurement of the mounting holes. For example, 200 x 200 indicates that the mounting holes are spaced 200mm horizontally and 200mm vertically.

Follow the directions supplied with the wall mount to mount the TV to the wall.

Note: *The wall mount bracket and the screws are not included.*

Warning: This product should only be mounted by a professional installer.

Warning: **Never install or mount** this product to the ceiling with the screen side facing down. Installing or mounting this product to the ceiling or the underside of a structure or surface is hazardous and may result in personal injury and/or property damage.

1-1

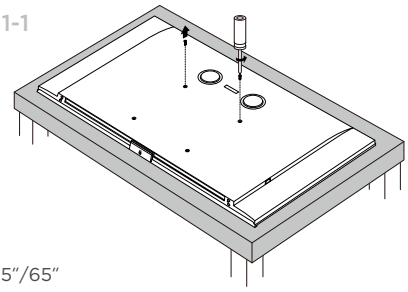

55"/65"

Place your TV on a soft, cushioned surface. Remove the 2 screws from the back of the TV and store in a safe place.

1-2

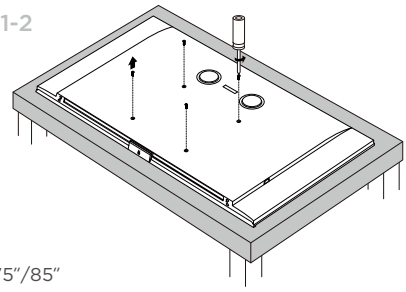

75"/85"

Place your TV on a soft, cushioned surface. Remove the 4 screws from the back of the TV and store in a safe place.

2

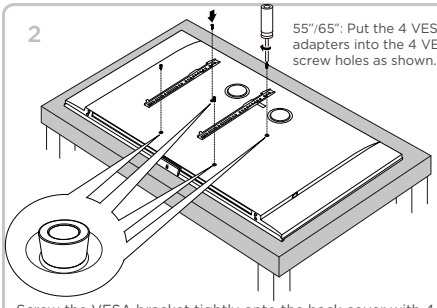

55"/65": Put the 4 VESA adapters into the 4 VESA screw holes as shown.

Screw the VESA bracket tightly onto the back cover with 4 VESA screws purchased with the wall mount separately.

3

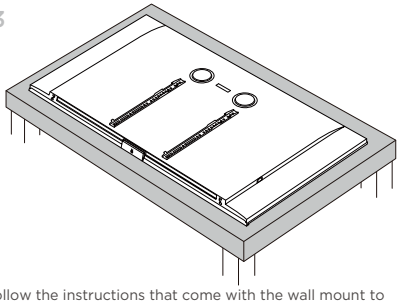

Follow the instructions that come with the wall mount to hang the TV on the wall.

To use the stand

A — Take the back cover out of the stand neck component as illustrated, then match the stand neck with the stand plate and fix it with 8 screws from the accessory bag.

B — To prevent damage to the screen, carefully place your TV on a soft, cushioned surface. Align the stands with the screw holes located on the TV. Secure the stands to the TV with the remaining stand screws.

C — Put back the back cover of the stand neck component. Align the four positioning columns with the holes to install.

Note: Make sure the installation direction of the stand is the same as illustrated. Please remove the protective film after installation.

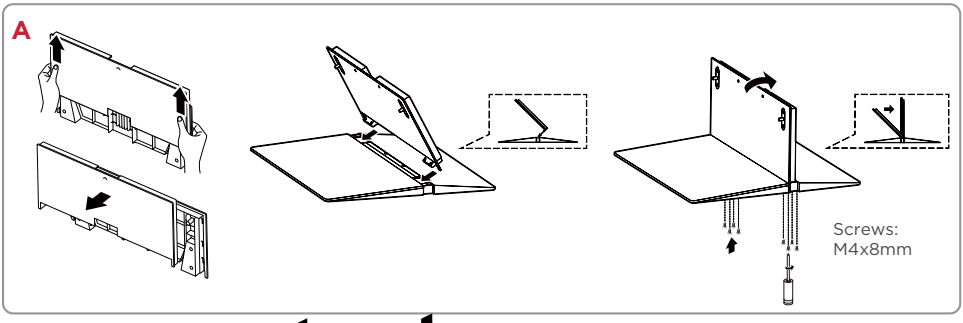

55"/65"/75"

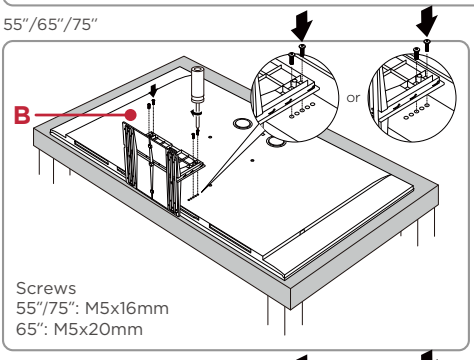

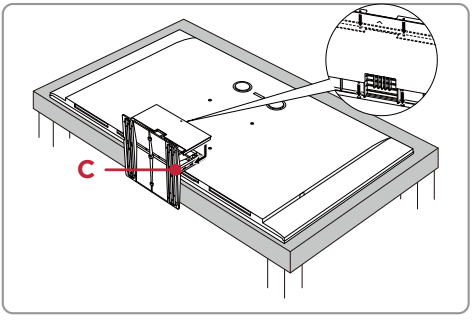

85"

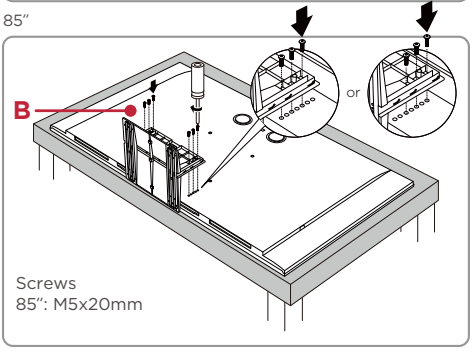

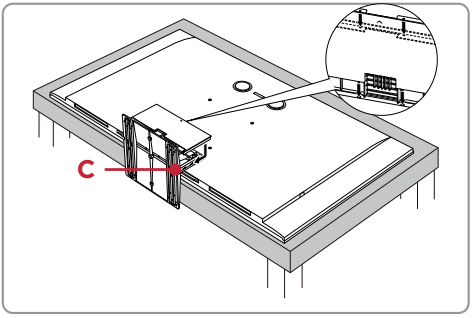

To use the cable clips

Insert the cable clips into the back of the TV and route the cables as illustrated.

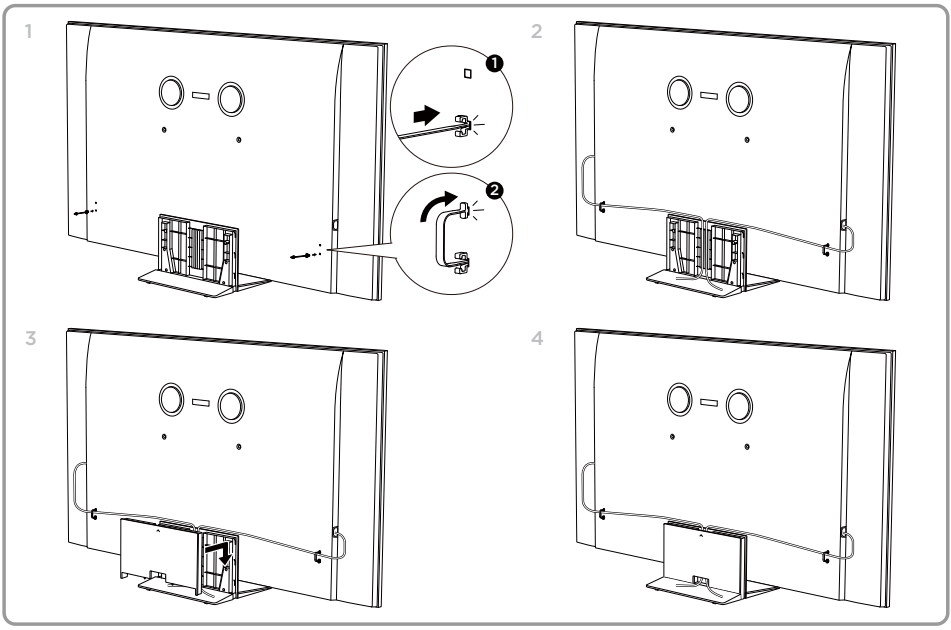

Connect to the Internet

The following instructions are just the usual ways to connect your TV to the wired or wireless network. The connection method may be different depending on your actual network configuration. If you have any questions about your home network, please refer to your Internet service provider.

Wired connection

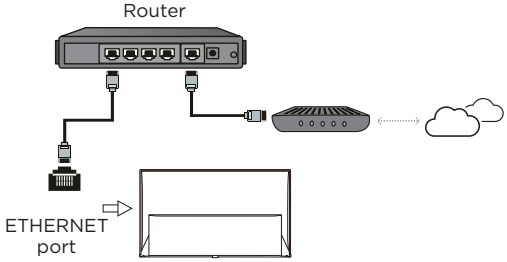

Wireless connection

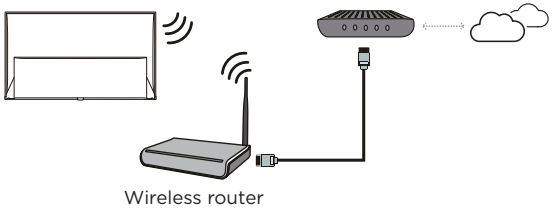

Network settings

1. Press ⌂ on the remote control to display the TV homepage.
2. Press ⚙ on the remote control, select **All settings** and press **OK** to enter the **Settings** menu.
3. Select **Network & Internet**, press **OK** to enter the submenu and follow the on-screen guidance to set up your network.

Switch the TV on and off

1. When the power cord is connected, the TV will be turned on directly or be in standby mode. If the TV is in standby mode, press the ⏻ button on the set or the ⏻ button on the remote control to turn it on.
2. To put the TV into standby mode, press the ⏻ button on the remote control. The TV set remains powered on, but with low energy consumption.
3. To completely turn the TV off, unplug the power cord from the wall outlet.

Initial setup

The first time you switch the TV on, the **Welcome** screen appears, which guides you through the initial setup process. Follow the on-screen instructions to finish the initial setup process including selecting the language, connecting to the network, and more. During each step, either make a choice or skip the step. If you skip a step, you can perform the setup later from the settings menu.

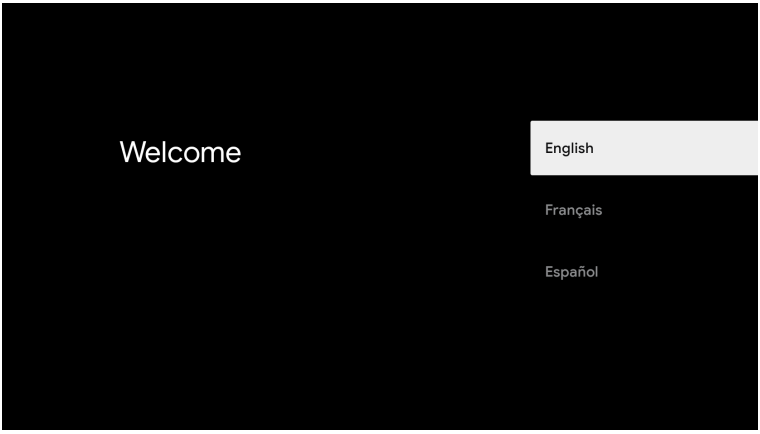

Basic TV operations

Accessing channels

In TV homepage, press the button on the remote control to display the live antenna TV channels and select **Search** to scan channels. Press the **CH** ∧/∨ buttons to change channels.

Watching connected devices

In TV homepage, press on the remote control, select **Inputs** and press **OK** to display the source list. Press the **Left/Right** button to select input source and press **OK** to confirm.

Adjusting volume

Press the **VOL** +/— buttons on the remote control to increase or decrease the volume. Press the button on the remote control to mute the sound.

Using the power button on your TV

In addition to using the remote control to control your TV, you can also use the button on your TV.

You can turn on the TV from standby mode by pressing the ⏻ button on your TV.

While the TV is on, the multi-function menu appears by pressing the ⏻ button on your TV. For more information on how to use the multi-function menu, please refer to the figure below.

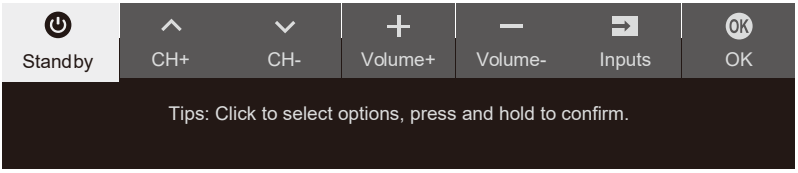

• Press the ⏻ button to move the highlight to the next function selection.

• Press and hold the ⏻ button for more than 2 seconds to confirm your selection.

Note: Please refer to the Quick Start Guide to find the ⏻ button on your TV set.

Accessing TV homepage

The basic TV homepage allows you to enjoy Internet Applications, specially adapted Internet websites, and change your TV settings.

WARNING:

- Configure the network settings before using Smart TV applications.
- Slow responses and/or interruptions may occur, depending on your network conditions.
- If you experience a problem using an application, please contact the content provider.
- According to circumstances of the content provider, an application's updates or the application itself may be discontinued.
- Depending on your country's regulations, some applications may have limited service or not be supported.
- Changes in application content may be made without prior notice by the service provider.

1. Press ⌂ on the remote control to display the TV homepage.
2. Press the **Up/Down/Left/Right** button and **OK** to enter the desired Apps, functions or settings.
3. Press ← to return to the homepage.

Note: Since the connection to the Internet takes time, it's recommended that you wait a few minutes to use the Smart TV feature after you activate the TV from standby mode.

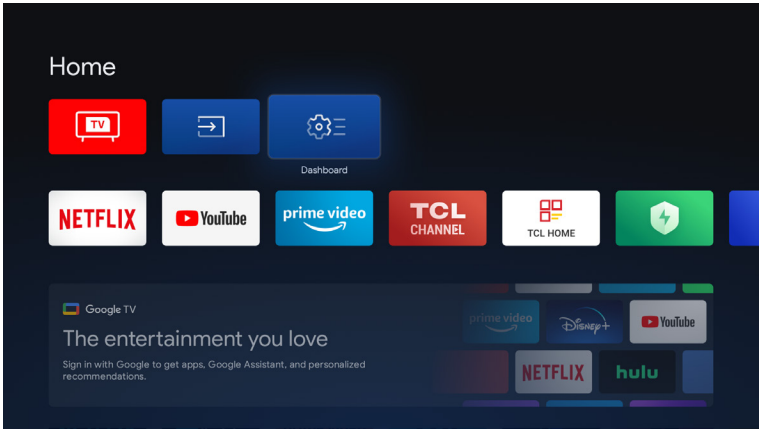

Using TV settings menu

Configure settings of TV features, such as channels, display and sound, network, accounts, privacy, apps, system, remotes and accessories, etc.

1. Press ⌂ on the remote control to display the TV homepage.
2. Press ⚙ on the remote control, select **All settings** and press **OK** to enter the **Settings** menu.
3. Press the **Up/Down** button to select menu options, then press **OK** to enter the option list or the corresponding submenu.
4. Press ← to return to the previous menu.
5. Press ⌂ to close the settings menu and return to the homepage.

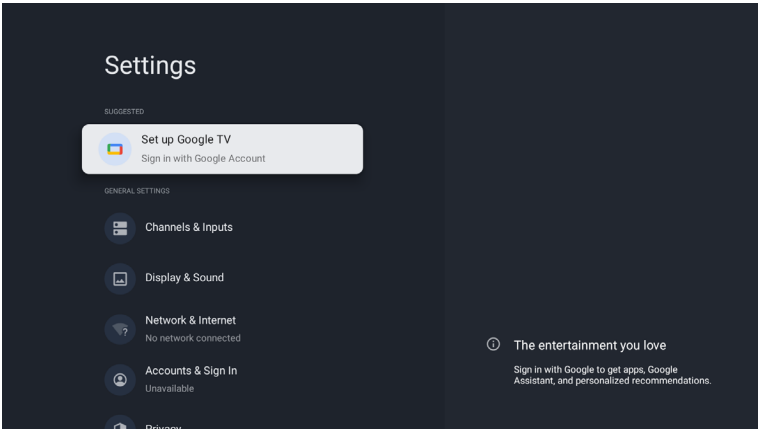

General settings

- **Channels & Inputs:** Adjust the channel settings, scan for channels and adjust input settings.
- **Display & Sound:** Adjust the picture settings and adjust to experience the different sound effects.
- **Network & Internet:** Configure the Wi-Fi and internet settings. The network status is also displayed.
- **Accounts & Sign In:** Sign in your Google account to make the most of your TV.
- **Privacy:** Adjust your privacy settings.
- **Apps:** View the list of recently opened apps, all installed apps and the system apps. You can also add permissions for different apps, configure special app access to optimized energy and set usage access, notification access, and more.
- **System:** Adjust the system settings of the TV.
- **Accessibility:** Configure captions, high contrast text, text to speech. Set the accessibility shortcut, talkback and switch Access, and more.
- **Remotes & Accessories:** Search for Bluetooth accessories and pair them with your TV. You can set up your TV to make it visible to all nearby Bluetooth devices.
- **Help & Feedback:** Visit Google TV Help.

Adjusting your TV

Channels & Inputs

The channels and inputs menus are used to scan and maintain your channels, and access the Electronic Program Guide. Adjust the input settings. The menus are only available in TV mode.

1. In TV mode, press ⚙ on the remote control, select **All settings** and go to **Channels & Inputs**.
2. Press the **Up/Down** button to select the item you want to set, and then press **OK**.
3. Set the channel and input items to your preferences one by one.

Channels

- **Channel Scan:** Search channels automatically or manually.

  Country/Region: The TV installs and arranges channels according to your country or region. Press the **Up/Down** button to select **Country/Region**, and press **OK** to enter. Create or enter your password. Press the **Up/Down** button to select your country or region and press **OK** to confirm.

  Scan Automatically: Press the **Up/Down** button to select **Scan Automatically** and press **OK** to enter. Select the tuner mode and channel type you wanted, then press the **Down** button to select **Search** and press **OK** to start scanning channels.

  Manually Scan: Scan channels manually by entering parameters such as channel number or frequency.

- **Edit Channels:** After the automatic search, channels are arranged in a preset order. If you want to edit the channel list, select **Edit Channels** and press **OK** to enter.
- **Clear Channel List:** Reset all channel lists.
- **EPG:** Access electronic program guide.
- **Channel Diagnostics:** Test your TV's pictures, sound and signal.
- **Authentication for TV service:** Verify the authenticity a selected TV service and inform you when it is not trusted.

External Inputs

You can see the connected input, standby inputs and set the name of these inputs and select whether to display them in the input list.

- **HDMI (CEC):** Control the devices connected by HDMI.

  HDMI Control: Allows control of compatible HDMI-connected devices.

  eARC: Support for high-quality sound output from HDMI4 (ARC/eARC) audio devices.

  Power on the TV in sync: Allows to power on the TV synchronously when turning on the compatible HDMI-connected device.

  Device standby in sync: Allows the compatible HDMI-connected devices to synchronously standby while the TV is on standby.

  Auto Switch: Automatic standby to save energy when the HDMI-connected device is not in use.

Display & Sound

The menus are used to obtain the best picture and audio settings according to your preference and the type of program you are watching. The menus can be set up at every broadcasting type and every input source.

1. Press ⚙ on the remote control, select **All settings** and go to **Display & Sound**.
2. Press the **Up/Down** button to select the item you want to set, and then press **OK**.
3. Set the picture and audio items to your preferences one by one.

   Note: The options available may vary depending on the picture mode you set.

Picture

- **Picture Mode:** Select a picture mode optimized for different viewing conditions. Press the **Left/Right** button to select an option.

  Intelligent: Automatically adjusts the best image based on the content and viewing environment.

  Vivid: Enhanced colors and contrast.

  Standard: Optimized to save power, recommended for daily use.

  Sports: Suitable for watching sports content, fast-moving scenes are more smooth.

  FILMMAKER MODE: Restore the real film scene and feel the filmmaker's expression of the image.

  Movie: Suitable for watching movies, can enhance picture quality performance for films.

- **Brightness:** Adjust settings such as Contrast, Brightness, Black Level and so on. Press the **Up/Down** button to select an option and then press **OK**.

  Brightness: Adjust the luminance level of the screen. Press the **Left/Right** button to set the preferred brightness.

  Contrast: Adjust the white level of the picture.

  Black Level: Adjust the black level of the picture.

  Gamma: Adjust the middle range brightness of the picture. Smaller number makes pictures brighter.

  Automatic HDR Conversion: Intelligent video-based scene analysis for real-time dynamic range adjustment, enhancing image contrast.

  Dynamic Tone Mapping: Adjusts the balance between brightness and detail in HDR images.

  Dynamic Contrast: Automatically adjusts the contrast based on the picture content.

  Black Stretch: Adjust the contrast of image shadows for overall contrast enhancement.

  Local Contrast: Adjust the backlight intensity in each area and signal contrast to make the picture more bright and transparent.

  Peak Luminance: Adjust the maximum brightness of the control area in Local Dimming.

  Micro Contrast: Dynamically adjust the contrast curve of each signal partition to optimize the overall contrast.

  Dynamic Brightness: Automatically adjusts the blacklight according to the picture content.

- **Color:** Adjust settings such as Color Saturation, Temperature, Tint, etc.

  Color Saturation: Adjust the color saturation of the picture.

  Tint: Adjust the color tones of the pictures.

  Dynamic Color: Automatically enhance the color of the picture.

Adaptive Color Temperature : Automatically adjusts the screen color temperature based on the ambient room light.

Color Temperature: Adjust the color temperature of the picture.

White Balance: Adjust the white balance level.

Color Space: Adjust the color reproduction range.

- **Clarity:** Adjust settings such as Sharpness and Digital Noise Reduction.

  Sharpness: Adjust the detail of the picture.

  Digital Noise Reduction: Reduces the compression noise.

  Noise Reduction: Reduces the random noise.

  Gradation Clear: Removes noise caused by gradation.

  Super Resolution: Enhance video detail by executing super-resolution algorithms to analyze and process video images in real time.

  Precision Detail: A Dolby Vision technology that shows more detail in the bright and dark areas of the image, giving you a clearer and more realistic visual experience.

- **Motion:** Adjust motion such as LED Motion Clear and Blur Reduction.

  Motion Clarity: Intelligently adds motion compensation frames to reduce jitter and drag, making motion pictures look smoother and clearer.

  LED Motion Clear: Controls the LED backlight to make the fast moving images clear.

  Dynamic Acceleration: Increase screen refresh rate.

  Game Direct Sync: Reduces latency; applicable only to gaming scenarios with 50/60Hz signals.

- **Restore Defaults:** Resets all custom settings of the current picture mode. Press the **Left/Right** button to select **OK** and then press **OK**.

- **Apply All Picture Settings:** Apply your picture settings to all inputs or to the current input only.

- **Eye Health Protection:** Aiming to enhance visual comfort and achieve a healthier viewing experience.

  Adaptive Brightness: Automatically adjusts screen brightness based on ambient room light.

  Blue Light Filter: Reduce blue light in the image and protect your eyes.

- **Automatic Content Recognition:** When enabled, switch to the corresponding picture mode when FILMMAKER MODE/IMAX video content is recognized.

Screen Settings

- **Auto Detect:** Automatically adjusts the viewable screen according to the received signal.
- **Aspect Ratio:** Adjust the aspect ratio and viewable screen area.
- **Overscan:** Adjusts the picture size so that objects appear bigger but the edges of the picture are lost.

Sound

- **Sound Mode:** Select the sound mode that best suits your audio needs. Enter the **Sound Mode** menu and press the **Left/Right** button to select an option.

  Movie: Optimize surround sound for an immersive experience.

  Speech: Focus on vocals and enhancing the vocal clarity.

Music: Optimize sound details and enhance musical layering.

Games: Optimized surround sound for enhance gaming experience.

Night: Optimize the dynamic amplitude of sound for a soothing atmosphere at night.

Sports: Improve the sound spatial distribution to enhance the auditory experience.

Custom: Set the sound effects according to your personal preference in Custom.

- **Sound Mode Customization:** Set the sound effects according to your personal preference in Custom.
- **Beosonic:** Set the sound effects according to your personal preference in Beosonic.
- **Equalizer:** Adjust the sound based on dierent frequencies.

  Loudness: Automatically boosts low and high frequencies at lower volumes to maintain a balanced perceived sound.

  Treble: Adjust the treble level.

  Bass: Adjust the bass level.

  Center Speaker: Adjust the volume of the center speaker to enhance dialogue clarity.

  Surround Speaker: Adjust the volume of the surround speakers to optimize ambient sound effects.
- **Other Settings:** Adjust more sound options. Enter the menu and press the **Up/Down** button to select an option and then press **OK**.

  TV Placement: Choose optimal TV sound based on the position of your TV.

  Dolby Atmos: Enjoy a better surround sound experience when you turn on Dolby Atmos.

  DTS DRC: Reduce background noise in audio to make the sound clearer. This option is valid for DTS encoded audio.

  Audio Only Mode: Turns off the TV's screen for an audio-only experience.

Audio Output Settings

- **Audio Output:** Select the device you wish to output audio.

  Auto (Internal Speaker): Your TV will automatically select the highest priority audio device to output.

  Internal Speaker: Audio outputs from TV speakers.

  HDMI ARC/eARC: Audio outputs from ARC/eARC (via HDMI) connected device.

  Bluetooth: Audio outputs from Bluetooth-connected device.

  Optical: Audio output from Optical connected device.

  Internal Speaker + Subwoofer: Audio output from TV speaker and External Subwoofer (Optical) at the same time. Please manually select this mode after connecting the device.
- **Digital Audio Out:** Select the audio format for the audio system connected with HDMI or optical digital cable.
- **Speaker Management (Z100):** Manage connected speaker.
- **Audio Delay:** Adjust the delay time of the TV to the audio output to achieve the effect of sound and picture synchronization. This option is valid for audio output of Internal Speaker.
- **Digital Audio Out Delay:** Adjust the delay time of the digital audio port output to synchronize external device sound with visuals. This option is valid for audio output of Optical, ARC and External subwoofer and digital audio output shoube be set as PCM.

System

Follow these instructions to configure various system settings.

1. Press on the remote control to display the TV homepage.
2. Press on the remote control, select **All settings** and press **OK** to enter the **Settings** menu.
3. Press the **Up/Down** button to select **System** and then press **OK**.
4. Press the **Up/Down** button to select the items you want to set, and then press **OK**.

- **Ambient Screensaver:** You should set up Google TV to enable the function which can show the weather, time, etc. with Ambient. You can also set Google photos, art gallery and experimental.
- **Power & Energy:** Configure the screen saver settings, including power on behavior, Energy saver, Sleep Timer and Standby Mode.
- **About:** Check the detail information of the TV, such as system update, device name, status, model and version, product information, etc. You can also view legal information, turn on the auto update and reset the TV.
- **Date & Time:** This function needs network connection and then you can set the date and time. You can choose whether to auto synchronize or to manually set the date and time. You can also set the time zone and choose to use 24-hour format.
- **Language:** Select a menu language. The selected menu language will also be set as the voice recognition language.
- **Keyboard:** Configure the settings of the on-screen keyboard. You can set language and check the version, terms of service, privacy policy and open source licenses. You can share usage statistics automatically to Google and also manage keyboards.
- **Storage:** View the memory usage status, clear data, cache and defaults, and to open, force stop or disable an app. Besides, you can add or remove an app's permissions to access your contacts, location, and microphone, etc.
- **Cast:** Let others control your cast media. Show a notification on all Android devices connected to your Wi-Fi and let them control media casting to this device.
- **System sounds:** You can set the system sounds to off, low, medium or high.
- **AirPlay and HomeKit Settings:** Wirelessly share content with this TV using Apple AirPlay and control this TV using the Home app on your iphone, ipad, or Mac.
- **TCL Account & Sign In:** You can add accounts.
- **Parental Controls:** You can set the parental control feature to restrict the viewing of programs by children under the specified age limit. You must set a four-digit password before using the parental control feature. Password will be required to watch a program subject to watching restriction. Enter your password to access the submenu.
- **Game Master:** Turn on this function to enable VRR (Variable Refresh Rate) to allow smooth gaming and eliminate screen tearing.
- **Interactive Service:** Configure option of interactive service.
- **Emergency Alert:** Emergency information provided in TV programs.
- **Advanced Settings:** Set the LED indicator in standby mode and choose the environment in which your TV is used.
- **Restart:** Restart your TV.

Other information

Password in Parental Control

- Set the password in the **All settings** > **System** > **Parental Controls** menu.
- The super password is 0423. If you forget your code, enter the super password to override any existing codes.

Troubleshooting

Please check the following list before requesting service.

There is no picture or sound.

- Make sure the power cord is properly inserted in the power outlet.
- Make sure the source type is set correctly.
- Make sure the antenna is properly connected.
- Make sure the volume is not set to minimum or the sound is not set to mute.
- Make sure the headphones are not connected.
- The TV may be receiving a signal other than from TV broadcasting stations.

Picture is not clear.

- Make sure the antenna cable is properly connected.
- Consider whether your TV signal is being properly received.
- Poor picture quality can occur due to a VHS camera, camcorder, or other peripheral being connected at the same time. Switch off one of the other peripherals.
- The 'ghost' or double image may be caused by obstruction to the antenna due to high-rise buildings or hills. Using a highly directional antenna may improve the picture quality.
- The horizontal dotted lines shown on the pictures may be caused by electrical interference, e.g., hair dryer, nearby neon lights, etc. Turn off or remove these.

Picture is too dark, too light or tinted.

- Check the color adjustment.
- Check the brightness setting.
- Check the sharpness function.

Remote control does not work.

- Check the batteries of the remote control.
- Make sure the remote sensor window on the front of the TV is not in strong fluorescent lighting.
- Try to clean the remote sensor window on the front of the TV with a soft cloth.

If the above suggestions do not solve your technical issue, please refer to the warranty card for service information.

Broadcasting & Operating Environment

Broadcasting system	US System NTSC-M ATSC standard (8VSB), QAM
Receiving Channels	VHF2-13 UHF14-69 CATV 14-36 (A)-(W) 37-59 (AA)-(WW) 60-85 (AAA)-(ZZZ) 86-94 (86)-(94)95-99 (A-5)-(A-1) 100-135 (100)-(135) 01 (4A)
Tuner type	Frequency synthesized
Operating Temperature	5°C to 35°C (41°F to 95°F)
Operating Humidity	20% to 80%, non-condensing
Storage Temperature	-15°C to 45°C (5°F to 113°F)
Storage Humidity	10% to 90%, non-condensing

Battery CAUTION & Disposal Information

1. For best results, use alkaline-type batteries.
2. Do not mix Alkaline, Standard (Carbon-Zinc), or Rechargeable (Nickel Cadmium or Nickel Metal Hydride) batteries.
3. Always replace depleted batteries with two same brand-new batteries from the same manufacturer. Never use damaged batteries.
4. Do not use Rechargeable (Nickel Cadmium or Nickel Metal Hydride) batteries.
5. Install only new batteries of the same type in your product. There is a risk of fire or explosion if the battery is replaced by an incorrect type.
6. Do not mix old and new batteries.
7. Batteries should not be exposed to excessive heat, such as prolonged direct sunlight, open flame, or fire of any kind as it may result in an explosion, or leakage of flammable liquid, or gas.
8. Batteries should not be exposed to extremely low air pressure as it may result in an explosion or the leakage of flammable liquid or gas.
9. Failure to insert batteries in the correct polarity, as indicated in the battery compartment, may shorten the life of the batteries or cause batteries to leak.
10. Batteries should be recycled or disposed of as per state and local guidelines. Do not dispose of batteries in a fire, hot oven, or mechanically crushing or cutting a battery, which may result in an explosion.

ELECTRONICS & PACKAGING RECYCLING INFORMATION

Recycle Your Device Properly. In accordance with state and local laws, this product may be classified as a covered electronic device and must not be disposed of with household trash. TCL encourages consumers to always look for a recycling or reuse alternative to discarding electronic products through drop-off and mail-back options. Visit **tcl.com/us/en/sustainability/electronics-recycling** for instructions and authorized collection sites. Click on our convenient interactive map to quickly locate a solution in your community. For mail-back option, visit **www.mrmrecycling.com/recycle-now.php** and follow the instructions.

Look for convenient How2Recycle® labels on the product box for help preparing your new TV packaging for recycling. These labels show important information identifying the various types of packaging material included with your new TV along with easy-to-understand recycling instructions.

Warning: To avoid the danger of suffocation, keep plastic packaging away from pets, babies, and children. Do not use packaging bags in cribs, beds, carriages, or playpens.

Legal Statement

Due to the various capabilities of products featuring the SmartTV - Services, as well as limitations in the available content, certain features, applications, and services may not be available on all devices or in all territories. Some features on SmartTV may also require additional peripheral devices or membership fees that are sold separately. Please visit our website for more information on specific device information and content availability. The services and availability of content through SmartTV are subject to change from time to time without prior notice.

All content and services accessible through this device belong to third parties and are protected by copyright, patent, trademark and/or other intellectual property laws. Such content and services are provided solely for your personal noncommercial use. You may not use any content or services in a manner that has not been authorized by the content owner or service provider. Without limiting the foregoing, unless expressly authorized by the applicable content owner or service provider, you may not modify, copy, republish, upload, post, transmit, translate, sell, create derivative works, exploit, or distribute in any manner or medium any content or services displayed through this device.

YOU EXPRESSLY ACKNOWLEDGE AND AGREE THAT USE OF THE DEVICE IS AT YOUR SOLE RISK AND THAT THE ENTIRE RISK AS TO SATISFACTORY QUALITY, PERFORMANCE AND ACCURACY IS WITH YOU. THE DEVICE AND ALL THIRD PARTY CONTENT AND SERVICES ARE PROVIDED “AS IS” WITHOUT WARRANTY OF ANY KIND, EITHER EXPRESS OR IMPLIED. TCL EXPRESSLY DISCLAIMS ALL WARRANTIES AND CONDITIONS WITH RESPECT TO THE DEVICE AND ANY CONTENT AND SERVICES, EITHER EXPRESS OR, IMPLIED, INCLUDING BUT NOT LIMITED TO, WARRANTIES OF MERCHANTABILITY, OF SATISFACTORY QUALITY, FITNESS FOR A PARTICULAR PURPOSE, OF ACCURACY, OF QUIET ENJOYMENT, AND NON-INFRINGEMENT OF THIRD PARTY RIGHTS. TCL DOES NOT GUARANTEE THE ACCURACY, VALIDITY, TIMELINESS, LEGALITY, OR COMPLETENESS OF ANY CONTENT OR SERVICE MADE AVAILABLE THROUGH THIS DEVICE AND DOES NOT WARRANT THAT THE DEVICE, CONTENT OR SERVICES WILL MEET YOUR REQUIREMENTS, OR THAT OPERATION OF THE DEVICE OR SERVICES WILL BE UNINTERRUPTED OR ERROR-FREE. UNDER NO CIRCUMSTANCES, INCLUDING NEGLIGENCE, SHALL TCL BE LIABLE, WHETHER IN CONTRACT OR TORT, FOR ANY DIRECT, INDIRECT, INCIDENTAL, SPECIAL OR CONSEQUENTIAL DAMAGES, ATTORNEY FEES, EXPENSES, OR ANY OTHER DAMAGES ARISING OUT OF, OR IN CONNECTION WITH, ANY INFORMATION CONTAINED IN, OR AS A RESULT OF THE USE OF THE DEVICE, OR ANY CONTENT OR SERVICE ACCESSED BY YOU OR ANY THIRD PARTY, EVEN IF ADVISED OF THE POSSIBILITY OF SUCH DAMAGES.

Third party services may be changed, suspended, removed, terminated or interrupted, or access may be disabled at any time, without notice, and TCL makes no representation or warranty that any content or service will remain available for any period of time. Content and services are transmitted by third parties by means of networks and transmission facilities over which TCL has no control. Without limiting the generality of this disclaimer, TCL expressly disclaims any responsibility or liability for any change, interruption, disabling, removal of or suspension of any content or service made available through this device. TCL may impose limits on the use of or access to certain services or content, in any case and without notice or liability. TCL is neither responsible nor liable for customer service related to the content and services. Any question or request for service relating to the content or services should be made directly to the respective content and service providers.

TCL North America Limited Product Warranty

All New TCL Product Models including LCD/LED Televisions, Gaming Monitors, Sound Bars, and Appliances including Window Air Conditioners, Portable and Through-The-Wall Air Conditioners, Dehumidifiers, Air Purifiers, and Robot Vacuums (each individually referred to as a "Product" or "Unit", and together referred to as the "Products").

What your warranty covers: Defects in materials or workmanship to the original owner of this TCL Product when purchased as new from an Authorized Dealer of TCL brand Products in the United States or Canada, provided that the Product was properly purchased within the Territories pursuant to all product requirements, instructions, and packaged with this warranty statement.

New Products (Non-Commercial Use)

For how long after your purchase:

• One (1) year from date of purchase or delivery for parts and labor for non-commercial use.

New Products (Commercial Use)

For how long after your purchase:

• Six (6) months from date of purchase or delivery for parts and labor for commercial use.

Commercial use includes, but is not limited to, the use of this Product in a commercial or business environment, the use of this Product in an institution or for institutional purposes, or other commercial purposes including rental purposes.

What we will do

• At TCL's discretion, (1) pay for both labor charges and parts to repair your Product, or (2) replace your Product with a new or refurbished/remanufactured equivalent Product. The decision to repair or replace will be made solely by TCL. See section entitled "How to get service."

How to get service

• Before submitting a request for warranty service, please visit support.tcl.com for helpful FAQs and additional troubleshooting suggestions.

• To get warranty service, contact TCL Customer Support by visiting support.tcl.com. Please have your Proof of Purchase, Product type, model number, serial number, and ZIP code ready. Troubleshooting and prior approval from a TCL representative MUST occur before sending in your Product to a TCL Service Center.

• A representative must troubleshoot your problem over the telephone, via chat, or through e-mail before receiving service. If it is determined that your Unit requires service, the service location will be at the sole discretion of TCL based upon the Limited Warranty Statement. Warranty service shall only be available upon scheduling during regular business hours. TCL shall not be responsible for Customer's inability to schedule warranty service during regular business hours. If Customer either misses or cancels warranty service more than two times with less than twenty-four hours' notice, TCL shall no longer be responsible for warranty service. In order to obtain warranty service, Customer shall reasonably cooperate in providing proof of the issues requiring service, including, but not limited to pictures, videos, and follow the instructions of the technician diagnosing the issue. In the event that Customer is abusive, harassing, vulgar, and/or provides an otherwise unsafe environment for television repair, service, or diagnostics, TCL shall be discharged from any and all limited warranty obligations regarding the Product.

• At the sole discretion of TCL, television screen sizes 43-inches and smaller will either be repaired at an Authorized TCL Service Center or directly exchanged for a new or refurbished/re-certified Unit. At the sole discretion of TCL, television screen sizes 44-inches or larger will either be repaired or directly exchanged for a new or refurbished/re-certified Unit at an Authorized TCL Service Center or in-home. At the sole discretion of TCL, Sound Bars, and Appliances including Window Air Conditioners, Portable and Through-The-Wall Air Conditioners, Dehumidifiers, Air Purifiers, and Robot Vacuums will either be repaired or directly exchanged for a new or refurbished/re-certified Unit at an Authorized TCL Service Center or in-home. In the event of a service visit where the on-site technician, in his-her sole discretion, deems the home or property

conditions to be hazardous and/or unsafe, TCL reserves the right to cancel or re-schedule the service visit, or opt for an exchange of the in-warranty Unit for a refurbished/re-certified Unit in lieu of the in-home service visit.

- TCL is not responsible for transportation costs for warranty coverage, including but not limited to Unit repair or replacement, to the Authorized TCL Service Center or TCL-designated address. However, TCL will pay for return shipping to a United States or Canada address only. TCL will provide instructions for packaging and shipping the Unit to the Authorized TCL Service Center or TCL-designated address. Units that are improperly packed and damaged during shipping are not covered under your limited Product warranty.
- Proof of purchase in the form of a bill of sale, receipt, invoice from an Authorized Dealer which is evidence that the Product is within the warranty period must be presented to obtain warranty service. Failure to provide adequate and/or non-fraudulent proof of purchase shall result in denial of a limited warranty claim.
- In the event that a Unit is to be replaced, a picture of the back of the Unit showing the model and serial number and picture of the Product issue itself may be required as well as shipping of the product to TCL prior to replacement.
- If a Unit is replaced, You must check the product within five (5) days of receipt and report any damage to TCL immediately. Failure to do so shall release TCL from any and all claims related to shipping damage. Replacement televisions shall only have limited warranty coverage for the period of time remaining on the original Product's Limited Warranty or thirty (30) days, whichever period is longer.
- PRE-AUTHORIZATION MUST BE OBTAINED BEFORE (1) SENDING ANY PRODUCT TO AN AUTHORIZED TCL SERVICE CENTER, OR (2) OBTAINING ANY IN-HOME REPAIR/ REPLACEMENT/RENTAL SERVICES.

What your warranty does not cover

Property damage, malfunction, or failure of the Product or related system, or personal injury caused by or resulting from:

- A Unit sold in "As-Is", "Used", "Factory Reconditioned", "Factory Re-Certified", or "Refurbished", condition or with faults.
- Damage caused by transportation or handling, storage, onsite construction, transit, including damage during shipment from a Retailer (please contact your Retailer for assistance).
- Operating the Product in incomplete or unfinished structures
- Improper sizing, selection or specification of the Product
- Improper or deferred maintenance contrary to TCL's schedule or instructions
- Extended Service Plans purchased from Retailers. Please contact your Retailer and/or your extended service plan provider for assistance.
- Customer installation including Products used in any manner contrary to the Product documentation. (Your Owner's Manual describes how to install, adjust, and operate your Unit. Any additional information should be obtained from your Authorized Dealer).
- Service calls to your home for delivery or pick-up, installation, instruction, replacement of house fuses, connection of house wiring or plumbing, or to correct unauthorized repairs.
- Installation and related adjustments, or damage resulting from installation, repair, or service.
- Damage resulting from non-approved installation or repair methods.
- Failure of the Product to perform due to wireless signal reception problems not caused by your Unit, or due to power failures or interruptions, or inadequate electrical service.
- Malfunctioning pixels of less than two malfunctioning pixels per million pixels as detailed in TCL's Pixel Policy.
- Damage from misuse, abuse, neglect, insects, normal wear and tear, cosmetic damage, mishandling, faulty installation, inadequate wireless signal reception, inadequate electrical wiring, or power line surges.

- Physical abuse or misuse of the Product (including failure to perform any scheduled maintenance as described in the Product documentation such as air filter cleaning, or any Product damaged by excessive physical or electrical stress).
- Damage caused by operating the Product in a corrosive or wet environment, including those containing chlorine, fluorine or any other hazardous or harmful chemicals or environmental factors
- Operating the Product in environments with excessive or harmful volatile organic compounds (VOCs), improper air makeup or supply, or with inadequate ventilation.
- Markings or images on the television's panel resulting from viewing fixed images (including but not limited to certain 4:3 images on wide screen televisions, or data or images in fixed screen locations from banners, video games, or certain broadcast networks).
- Units that have original factory serial numbers that are unreadable or missing, or that have been changed, defaced, or altered in any manner.
- Batteries.
- A television that has been modified or incorporated into other Products, or that has had the serial number removed or altered.
- Use of accessories or components that are not compatible with this Product.
- A Unit purchased or serviced outside of the United States or Canada.
- Costs of shipping the Unit to the Authorized TCL Service Center or TCL-designated address. TCL will pay for return shipping to the customer to a United States or Canada address only.
- Events of force majeure or damage caused by other factors such as earthquakes, fires, lightning, hail, wind, freezing, flooding, standing, pooling, or ponding water, power surges, fluctuations in or interruptions of electrical power, rodents, vermin, insects, or other animal-or-pest related issues.
- Acts of nature or God (as illustrative examples and for the avoidance of doubt, such acts of nature or God include but are not limited to damage caused by earthquakes, fires, lightning, or flood whether caused by nature or humans).
- Special, incidental, or consequential damages.

This Limited Warranty Also Excludes

- Labor or any other costs incurred for service, maintenance, repair, removing, replacing, installing, complying with local building and electrical codes, or shipping or handling of defective or replacement Products or parts (except as expressly provided in Section 1.b. above);
- Consumable items, such as air filters and refrigerant (if applicable);
- Service calls where no defect is found;
- Product installation, set-up, and related adjustments;
- Adjustments of user controls
- Products purchased or installed outside of the Territories or purchased from any person, entity, or source not expressly authorized by TCL;
- Products with missing or unreadable original factory serial numbers or that have had the original factory serial number or any part thereof changed, altered, defaced, removed, or otherwise modified in any manner; and
- Peripheral third party components connected to the Product, such as DVD players, gaming systems, cable/satellite boxes, streaming sticks, refrigerant piping, electrical wiring, pumps, valves, controls, accessories, etc.
- Issues arising from the operating system, quality or speed of internet service or Wi-Fi, video quality issues, or use/performance of third-party applications. This includes all video applications and similar services. In such cases, the warranty does not apply, and support should be sought from the respective service or platform provider.

LIMITATION OF WARRANTY

- EXCEPT AS OTHERWISE PROVIDED IN THIS LIMITED WARRANTY, TCL MAKES NO OTHER WARRANTIES OF ANY KIND WHATSOEVER REGARDING THE PRODUCT. NO VERBAL OR WRITTEN INFORMATION GIVEN BY TTE TECHNOLOGY, INC. DBA TCL NORTH AMERICA, ITS AGENTS OR EMPLOYEES SHALL CREATE A GUARANTY OR IN ANY WAY INCREASE OR MODIFY THE SCOPE OF THIS WARRANTY. NO ONE IS AUTHORIZED TO CHANGE THIS LIMITED WARRANTY IN ANY RESPECT OR TO CREATE ANY OTHER OBLIGATION OR LIABILITY FOR TCL IN CONNECTION WITH THE PRODUCT. TCL DISCLAIMS AND EXCLUDES ALL WARRANTIES NOT EXPRESSLY PROVIDED HEREIN AND ALL REMEDIES WHICH, BUT FOR THIS PROVISION, MIGHT ARISE BY IMPLICATION OR OPERATION OF LAW. ANY AND ALL IMPLIED WARRANTIES INCLUDING WARRANTIES OF MERCHANTABILITY AND OF FITNESS FOR A PARTICULAR PURPOSE ARE EXPRESSLY LIMITED TO A TERM EQUAL TO THE TERM OF THIS LIMITED WARRANTY. SOME STATES DO NOT ALLOW LIMITATIONS ON HOW LONG AN IMPLIED WARRANTY LASTS, SO THE ABOVE LIMITATION MIGHT NOT APPLY TO YOU. TCL DISCLAIMS ALL LIABILITY FOR THE ACTS, OMISSIONS, AND CONDUCT OF ALL THIRD PARTIES (INCLUDING BUT NOT LIMITED TO THE INSTALLING OR SERVICING CONTRACTOR, ANY DISTRIBUTOR, OR DEALER) IN CONNECTION WITH OR RELATED TO THE PRODUCT.
- UNDER NO CIRCUMSTANCES SHALL TCL BE LIABLE FOR ANY INDIRECT, INCIDENTAL, SPECIAL, PUNITIVE, OR CONSEQUENTIAL DAMAGES INCLUDING, WITHOUT LIMITATION, INFRINGEMENT OF THIRD PARTY RIGHTS, LOST GOODWILL, LOST REVENUES OR PROFITS, WORK STOPPAGE, PRODUCT FAILURE, IMPAIRMENT OF OTHER GOODS, COSTS OF REMOVAL AND REINSTALLATION OF THE PRODUCT, LOSS OF USE, INJURY TO PERSONS OR PROPERTY ARISING OUT OF OR RELATED TO THE PRODUCT WHETHER BASED ON BREACH OF WARRANTY, BREACH OF CONTRACT, TORT OR OTHERWISE, EVEN IF TCL HAS BEEN ADVISED OF THE POSSIBILITY OF SUCH DAMAGE. IN NO EVENT SHALL TCL'S LIABILITY EXCEED THE ACTUAL PURCHASE PRICE OF THE PRODUCT WITH RESPECT TO WHICH ANY CLAIM FOR THE PRODUCT IS MADE.
- REPAIR OR REPLACEMENT AS PROVIDED UNDER THIS WARRANTY IS THE EXCLUSIVE REMEDY OF THE CONSUMER. TTE TECHNOLOGY, INC. DBA TCL NORTH AMERICA SHALL NOT BE LIABLE FOR SPECIAL, INCIDENTAL, OR CONSEQUENTIAL DAMAGES RESULTING FROM THE USE OF THIS PRODUCT OR ARISING OUT OF ANY BREACH OF ANY EXPRESS OR IMPLIED WARRANTY ON THIS PRODUCT. THIS DISCLAIMER OF WARRANTIES AND LIMITED WARRANTY ARE GOVERNED BY THE LAWS OF THE STATE OF CALIFORNIA. EXCEPT TO THE EXTENT PROHIBITED BY APPLICABLE LAW, ANY IMPLIED WARRANTY OF MERCHANTABILITY OR FITNESS FOR A PARTICULAR PURPOSE ON THIS PRODUCT IS LIMITED TO THE APPLICABLE WARRANTY AND WARRANTY PERIOD SET FORTH ABOVE. THIS WARRANTY IS SUBJECT TO CHANGE WITHOUT NOTICE. PLEASE VISIT WWW.TCL.COM TO VIEW THE MOST CURRENT VERSION.
- EXCEPT WHERE PROHIBITED BY LAW, ALL DISPUTES BETWEEN YOU AND TCL ARISING OUT OF OR RELATING IN ANY WAY TO THIS LIMITED WARRANTY OR THE PRODUCT SHALL BE RESOLVED EXCLUSIVELY THROUGH BINDING ARBITRATION, AND NOT IN A COURT OF GENERAL JURISDICTION. BINDING ARBITRATION MEANS THAT YOU AND TCL ARE EACH WAIVING THE RIGHT TO A COURT HEARING, RIGHT TO A JURY TRIAL, AND RIGHT TO BRING OR PARTICIPATE IN A CLASS ACTION. PLEASE CAREFULLY REVIEW THE DISPUTE RESOLUTION PROVISIONS BELOW, WHICH ALSO DESCRIBE YOUR RIGHT TO OPT-OUT.
- In the event of a dispute, you must first notify TCL in writing at least 30 days before initiating any arbitration proceeding by sending a letter to TCL at TTE Technology, Inc., Attn: Legal Department, 189 Technology Drive, Irvine, CA 92620. The notice must provide your name, address, and telephone number; identify the Product that is the subject of the claim; and describe the nature of the claim and the relief being sought. If you and TCL are unable to resolve the dispute within 60 days, either party may proceed to file a claim for binding arbitration. Unless you opt-out as provided below, all claims must be brought in the parties' individual capacity, and not as a plaintiff or class member in any purported class or representative proceeding. Further, you agree that, except as specifically provided herein, the arbitrator may not consolidate proceedings of more than one person's claims and may not otherwise preside over any form of a representative

or class proceeding. This waiver applies to class arbitration unless such arbitration is necessary to effectuate the enforcement of the class action waiver or in the event that TCL expressly agrees to class arbitration. Instead of arbitration, either party may bring an individual action in small claims court if the dispute qualifies under the monetary limitations for small claims court proceedings, but that small claims court action may not be brought on a class or representative basis.

- The arbitration will be administered by the American Arbitration Association ("AAA") before a single arbitrator under the AAA's Consumer Arbitration Rules and Mediation Procedures that are in effect at the time the arbitration is initiated (referred to as the "AAA Rules") and under the procedures set forth in this section. The AAA Rules are available online at www.adr.org/consumer. Send a copy of your written demand for arbitration, as well as a copy of this provision, to the AAA in the manner described in the AAA Rules. You must also send a copy of your written demand to TCL at TTE Technology, Inc., Attn: Legal Department, 189 Technology Drive, Irvine, CA 92620. You and TCL shall follow the AAA Rules applicable to initial filing fees, but in no event will you be responsible for any portion of those fees in excess of the filing or initial appearance fees applicable to state or federal court actions in the jurisdiction where the arbitration will be conducted. The arbitration will be conducted virtually, unless you and TCL agree otherwise or the arbitrator orders an in-person hearing. If there is a conflict between the AAA Rules and the rules set forth in this section, the rules set forth in this section will govern. This arbitration provision is governed by the Federal Arbitration Act. Judgment may be entered on the arbitrator's award in any court of competent jurisdiction.
- You may opt-out of the foregoing arbitration and class action/jury trial waiver provision by sending writing notification to TCL in writing within thirty (30) days of the original purchase at TTE Technology, Inc., Attn: Legal Department, 189 Technology Drive, Irvine, CA 92620. Such notification must include your name and address, your warranted Product's model and serial number, the date of purchase, and a clear statement of your intent to opt-out of this dispute resolution procedure. No other form of notice will be effective to opt-out of this dispute resolution procedure. Opting out of this dispute resolution procedure will not affect the coverage of the Limited Warranty in any way, and you will continue to enjoy the full benefits of the Limited Warranty. If you keep this Product and do not opt out, then you accept all terms and conditions of the dispute resolution procedure described above.

How State Law relates to this warranty

- Some states or provinces do not allow limitations on warranties or exclusions or limitation of damages or limitations on how long an implied warranty lasts, so the above limitations or exclusions may not apply to you. Some states do not allow limitations on how long an implied warranty lasts, so the above limitation might not apply to you. TCL disclaims all liability for the acts, omissions, and conduct of all third parties (including but not limited to the installing or servicing contractor, any distributor, or dealer) in connection with or related to the product.
- This warranty gives you specific legal rights, and you also may have other rights that vary from state to state or province to province.
- If you purchased your Unit outside of the United States or Canada or seek warranty service coverage outside of the United States or Canada, this warranty does not apply. Contact your dealer for warranty information. Service calls which do not involve defective materials or workmanship are not covered by this limited warranty. Costs of such service calls are the sole responsibility of the purchaser.
- This Limited Warranty is not transferable to subsequent purchasers or anyone else who may acquire an interest in the Product unless the original purchaser is a resident of Texas or Florida and complies with this provision. Residents of Texas and Florida may transfer the rights under this Limited Warranty ONLY if the Product is transferred to a subsequent purchaser as part of an agreement between the original purchaser and a subsequent purchaser of the sale of the entire residence in which the Product was first installed. This provision does not in any way extend or modify the length of time this Limited Warranty applies, and the subsequent purchaser's warranty duration shall match that of the original purchaser.
- If any term or provision of this Limited Warranty is invalid, illegal, or unenforceable in any jurisdiction, such invalidity, illegality, or unenforceability shall not affect any other term or

provision of this Limited Warranty or invalidate or render unenforceable such term or provision in any other jurisdiction.

- TCL reserves the right to amend or modify this Limited Warranty from time to time without notice. Please visit www.TCL.com to view the most current version of this Limited Warranty.