TCL

User Guide

For United States

English



55/65/75/85A300L

TCL and the TCL Logo are owned by TCL Corporation and under license to TCL North America. Other brand and product names are the trademarks or registered trademarks of their respective owners.

To enjoy all smart features and services on your TCL TV with Google TV™, a Google Account, a TCL account, and a reliable broadband internet connection are required.

Illustrations in this guide are provided for reference only and may differ from actual product appearance. Product design and specifications may be changed without notice.

Contents

Important Information 3
Important Safety Instructions 4

Connections and setup

Before initial setup 6
Protect against power surges 6
Safety information 6
Avoid audio interference 6
Avoid direct light 6
Set up your new TV 8
What's in the box 8
Table Stand Installation 9
To mount on a wall 10
Magnetic Bezel Installation 12
Connect to the Internet 13
Network settings 13
Switch the TV on and off 14
Initial setup 14

Basic TV operations

Accessing channels 15
Watching connected devices 15
Adjusting volume 15
Using the power button on your TV 15
Accessing TV homepage 16
Using TV settings menu 17

Adjusting your TV

Channels & Inputs 18
Display & Sound 19
System Settings 21

Other information

Password in Parental Control 22
Troubleshooting 22
Broadcasting & Operating Environment 23
Battery CAUTION & Disposal Information 23
ELECTRONICS & PACKAGING RECYCLING INFORMATION 24
Legal Statement 25
TCL North America Limited Warranty 26

Important Information



CAUTION
RISK OF ELECTRIC SHOCK.
DO NOT OPEN.



CAUTION: Neutral fusing. Disconnect mains before servicing.

Caution: To reduce the risk of electric shock, do not remove cover (or back). No user serviceable parts inside. Refer servicing to qualified service personnel.



This symbol indicates that this product incorporates double insulation between hazardous main voltage and user accessible parts. When servicing, use only identical replacement parts.



This symbol indicates “dangerous voltage” inside the product that presents a risk of electric shock or personal injury.



This symbol indicates important instructions accompanying the product.

WARNING

To reduce the risk of fire or electric shock, do not expose this product to rain or moisture. This product should not be exposed to dripping or splashing. No objects filled with liquids, such as vases, should be placed on the apparatus.

The TV is unstable if it is not properly attached to the base or mounted to the wall. Please follow the base or wall mounting instructions provided in the User’s Guide to ensure your safety.

The batteries should not be exposed to excessive heat, such as prolonged direct sunlight, open flame, or fire of any kind. Refer to the identification/rating label located on the back panel of your product for its proper operating voltage.

Cable TV Installer: This reminder is provided to call your attention to Article 820-40 of the National Electrical Code (Section 54 of the Canadian Electrical Code, Part 1) which provides guidelines for proper grounding and, in particular, specifies that the cable ground should be connected to the grounding system of the building as close to the point of cable entry as practical.

Important: This television is a table model and is designed to sit on a firm, flat surface. Do not place the TV on soft carpeting or on a similar surface as this may cause the ventilation slots located on the bottom of the unit to be blocked and may result in reduced product lifespan from overheating To assure adequate ventilation for this product, maintain a spacing of one (1) inch from the top and side of the TV receiver and two (2) inches from the rear of the TV receiver and other surfaces.

Make sure the TV stand or base you use is of adequate size and strength to prevent the TV from being accidentally tipped over, pushed o, or pulled o. This may cause personal injury and/or damage the TV. Refer to the Important Safety Instructions on the next page.

The Power button ⏻ on this TV and your remote control puts the TV into a very low-power standby mode but will not completely turn the power off. In order to completely shut the power off, you will need to disconnect the power cord from the outlet. The mains plug/appliance coupler is used to completely turn off the device. If you prefer to completely turn off the device, you should install the TV in a manner that allows you to disconnect the power cord when desired.

Warning: Changes or modifications to this unit not expressly approved by the party responsible for compliance could void the user’s authority to operate the equipment. Keep the apparatus at least 8 inches away from the human body.

For the best viewing experience, remove the energy guide label from the TV front panel or TV screen before use.

Important Safety Instructions



1. Read these instructions.
2. Keep these instructions.
3. Heed all warnings.
4. Follow all instructions.
5. Do not use this apparatus near water.
6. Clean only with a dry cloth.
7. Do not block any ventilation openings. Install in accordance with the manufacturer's instructions.
8. Do not install near any heat sources such as radiators, heat registers, stoves, or other apparatus (including amplifiers) that produce heat.
9. Protect the power cord from being walked on or pinched particularly at plugs, convenience receptacles, and the point where they exit from the apparatus.
10. WARNING: Please refer the information on exterior bottom enclosure for electrical and safety information before installing or operating the apparatus.
11. WARNING: The main plug is used to disconnect the device and should remain readily operable.
12. When not in use, tie up the power cordset with a cable tie or with something similar. It should not be near sharp edges as it may cause abrasion of the power cordset. When put into use again, please make sure the power cordset is not damaged. If any damage is found, please use a replacement power cord specified by the manufacturer or that is identical to the original one.
13. No open flame sources, such as lit candles, should be placed on, under, or near the apparatus
14. Unplug this apparatus during lightning storms or when unused for long periods of time.
15. Only use attachments/accessories specified by the manufacturer.
16. Use only with the cart, stand, tripod, bracket, or table specified by the manufacturer, or sold with the apparatus. When a cart is used, use caution when moving the cart/apparatus combination to avoid any injury.
17. Refer all servicing to qualified service personnel. Servicing is required when the apparatus has been damaged in any way, such as power-supply cord or plug is damaged, liquid has been spilled or objects have fallen into the apparatus, the apparatus has been exposed to rain or moisture, does not operate normally, or has been dropped.
18. For safe operation of the apparatus, please follow these installation requirements:
    Keep at least 2 inches of ventilation space between the rear cover of the apparatus and the wall
    Keep at least 1 inch of ventilation space between the apparatus and all other surfaces. Do not allow any of the apparatus' ventilation openings to be blocked by objects that might obstruct them, such as newspapers, curtains, table-cloths or any other objects. Do not expose the apparatus to any external heat sources. Do not place any heat sources such as candles, lamps, etc. on the apparatus. Do not expose the device to high levels of humidity or to any possible sources of moisture. When disposing of used batteries from the remote control, consult local regulations regarding proper disposal.

19. If an outside antenna or cable system is connected to the product, be sure the antenna or cable system is grounded so as to provide some protection against voltage surges and built-up static charges. Section 810 of the National Electrical Code, ANSI/NFPA No. 70-2011 (Section 54 of Canadian Electrical Code, Part 1) provides information with respect to proper grounding of the mast and supporting structure, grounding of the lead in wire to an antenna-discharge unit, size of grounding conductors, location of antenna discharge unit, connection to grounding electrodes, and requirements for the grounding electrode.
    See following example:

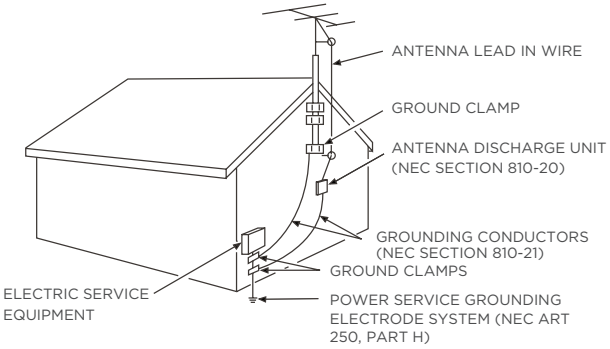

Connections and setup

Before initial setup

Protect against power surges

- Connect all components before you plug any power cords into the wall outlet or power strip.
- NEVER plug your TV into an outlet that is controlled by a wall switch.
- Turn off the TV before you connect or disconnect any cables.
- Make sure all antennas and cables are properly grounded. Refer to the Important Safety Instructions.

Safety information

- Prevent TV from overheating by placing in an area with good ventilation.
- Do not block ventilation holes on the TV. Position the TV so air can circulate freely on all sides.
- Do not stack objects on the TV.
- If you place the TV on a stand, make sure you allow adequate ventilation.
- If you connect an audio receiver or amplifier to the TV, place it on the top shelf so the heated air will not overheat the TV.

Avoid audio interference

- Position cables properly; insert each cable firmly into the designated jack.
- Route all cables down one side of the back of the TV instead of straight down the middle.
- If your antenna uses 300-ohm twin lead cables, do not coil the cables.
- Keep twin lead cables away from audio/video cables.

Avoid direct light

- Do not place the TV where sunlight or room lighting is directed toward the screen. Use soft or indirect lighting.

The terms HDMI, HDMI High-Definition Multimedia Interface, HDMI Trade Dress and the HDMI Logos are trademarks or registered trademarks of HDMI Licensing Administrator, Inc.

Dolby, Dolby Vision, Dolby Vision IQ, Dolby Atmos, Dolby Audio and the double-D symbol are trademarks of Dolby Laboratories Licensing Corporation. Manufactured under license from Dolby Laboratories. Confidential unpublished works. Copyright © 1992–2024 Dolby Laboratories. All rights reserved.

For DTS patents, see https://xperi.com/dts-patents/. Manufactured under license from DTS, Inc. And its affiliates. DTS, DTS:X, the DTS:X logo, Virtual:X, and the DTS Virtual:X logo are registered trademarks or trademarks of DTS, Inc. And its affiliates in the United States and/or other countries. © DTS, Inc. And its affiliates.
All rights reserved.

Covered by one or more claims of the HEVC patents listed at patentlist.accessadvance.com.

FCC Information

This equipment has been tested and found to comply with the limits for a Class B digital device, pursuant to Part 15 of the FCC Rules. These limits are designed to provide reasonable protection against harmful interference in a residential installation. This equipment generates, uses, and can radiate radio frequency energy and, if not installed and used in accordance with the instructions, may cause harmful interference to radio communications. However, there is no guarantee that interference will not occur in a particular installation. If this equipment does cause harmful interference to radio or television reception, which can be determined by turning the equipment off and on, the user is encouraged to try to correct the interference by one or more of the following measures:

- Reorient or relocate the receiving antenna.
- Increase the separation between the equipment and receiver.
- Connect the equipment into an outlet on a circuit different from that to which the receiver is connected.
- Consult the dealer or an experienced radio/TV technician for help.

This Class B digital apparatus complies with Canadian ICES-003.

The series, include models (55/65/75/85A300W)

This device complies with part 15 of the FCC Rules. Operation is subject to the following two conditions:

(1) This device may not cause harmful interference, and

(2) this device must accept any interference received, including interference that may cause undesired operation.

Supplier Name: TTE Technology, Inc. (dba TCL North America)

Supplier Address: 189 Technology Drive, Irvine, CA 92618, USA

Supplier phone number and internet contact information: 1-877-854-0181 support.tcl.com

Set up your new TV

Open the box and remove the TV and other items. Be careful, the TV may be heavy! We strongly recommend that at least two people unbox the TV.

Be sure to check all the foam packaging as the stands from some TV's are stored in the foam for protection.

Warning: To avoid the danger of suffocation, keep plastic packaging away from pets, babies, and children. Do not use packaging bags in cribs, beds, carriages, or playpens.

What's in the box

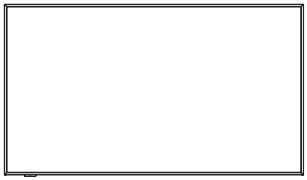

TV



Power cable



2 x AAA batteries for remote



M5X18mm

6 x Stand screws

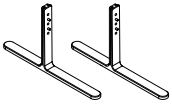

Table stands



2 x Screw hole covers



2 x Rubber protectors

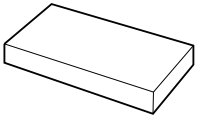

Wall mount bracket

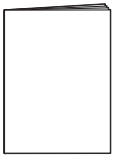

Quick Start Guide



TV remote

Table Stand Installation

Note: Two professionals are required to perform the below steps.

1. To prevent damage to the screen, carefully place your TV on a soft, cushioned surface. Please make sure that the surface must larger than the TV.
2. Align the stands with screw holes and locating holes in the high or low position on the TV. Secure the stands to the TV with six (6) screws.
3. Slide the screw hole covers and install the magnetic decorative cover.
4. All installation is now completed.

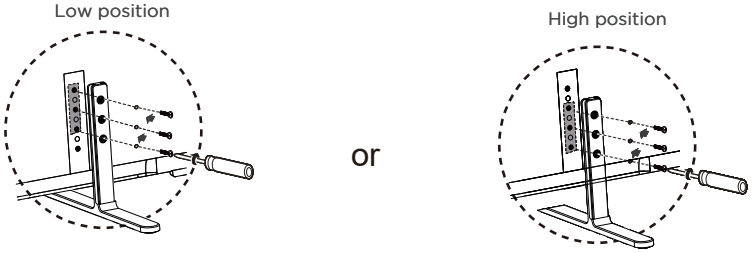

The black holes are screw holes while the white holes are locating holes. The table stands can be installed in a high position or low position. See figure above.

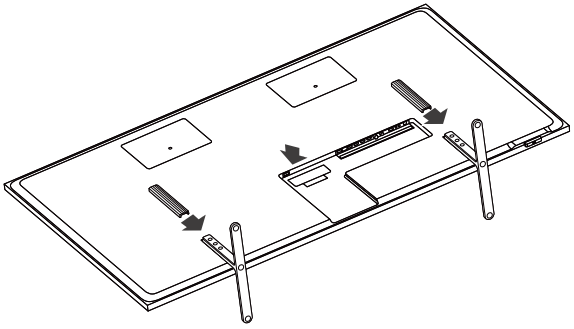

Note: Dust may be attracted to the magnet area on the back cover. This is a normal phenomenon and the dust can be removed by wiping.

To mount on a wall

If you are mounting your TCL Google TV to the wall, do not attach the TV base stand or TV stand column.

What's in the box


VESA bracket x2

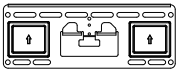
Wall plate x2


Drywall anchor x8
(Length: 50mm,
diameter: 8.1mm)


Screw (ST7X55mm) x8


Screw (M8X16mm) x2


Screw (M6X16mm) x2


Installation guide x1


Wall mount template x1


Pad x2

Assembly Steps

1 Screw the two VESA brackets tightly onto the VESA holes on the top of the TV with 2 VESA screws removed from back of TV (For 85", use the M8x16mm screws purchased with the wall mount).

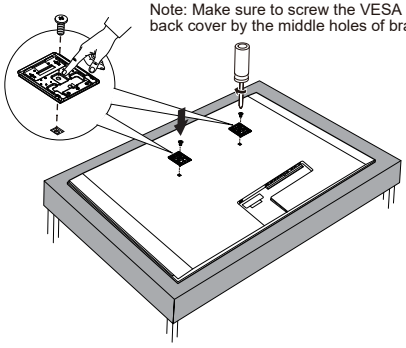
Note: Make sure to screw the VESA brackets tightly onto the back cover by the middle holes of brackets.

Arrow up

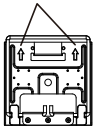

Note: The brackets should be correctly installed as shown:

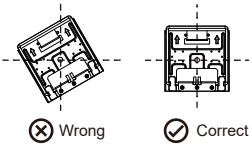

2

1).Place the wall mount template against the wall and hold or affix the template with tape to prevent movement.
2).Mark the screws hole on the wall mount template. Three screws are needed to fix each bracket and make sure that there is a screw in each of the areas A, B, C, and D depending on the installation environment.
3).Drill the wall according to the marked holes.
Note: if any holes align with a wood stud, drill a smaller pilot hole.

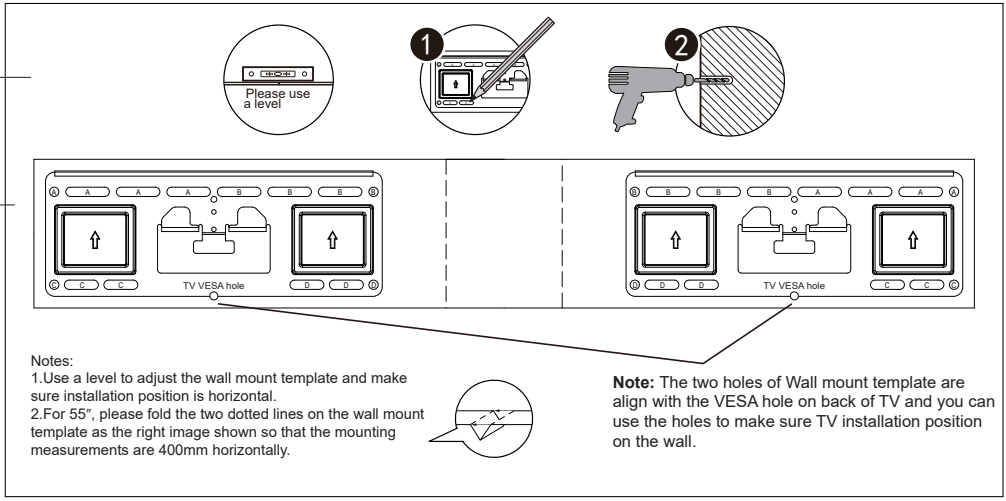

Notes:
1.Use a level to adjust the wall mount template and make sure installation position is horizontal.
2.For 55″, please fold the two dotted lines on the wall mount template as the right image shown so that the mounting measurements are 400mm horizontally.

Note: The two holes of Wall mount template are align with the VESA hole on back of TV and you can use the holes to make sure TV installation position on the wall.

3

Insert drywall anchors into the wall. If there are any holes in wood studs, anchors are not needed.
Screw two wall plates to the wall with 8pcs screws and 8pcs drywall anchors.
Note: 1.Keep arrows up towards the top of the TV during installation.
2.Please use the screwdriver with hexagonal socket to screw.

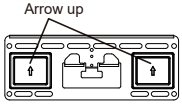

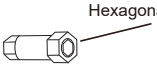

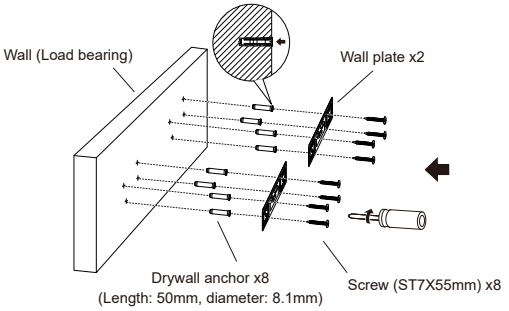

4

Open steel wires of VESA brackets to a proper angle as illustrated (ensuring that two angles of steel wires are kept as consistent as possible). Take two pads and affix them on the bottom of the TV back cover.

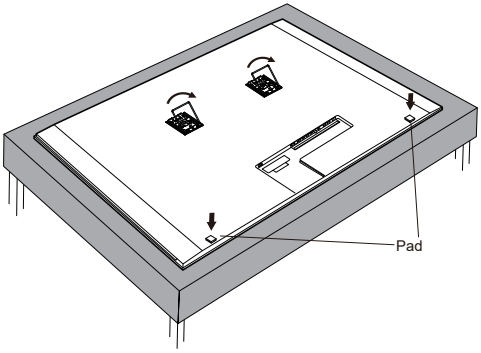

5

Note: More than 2 people are required to operate at the same time to avoid the damage to the TV and the screen, as well as personal safety.

Hang the steel wires of VESA bracket into the hook of the wall plate. Gently hold the edge of the TV screen with both hands, and push the TV towards the wall to ensure that the VESA bracket and the wall plate are flush. The installation is complete. To unplug or plug the power cable or signal cable, please turn off the power first and unplug the power plug. Follow the steps as shown:

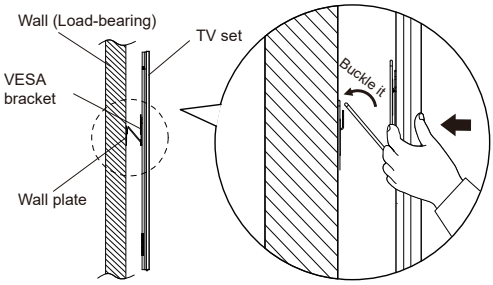

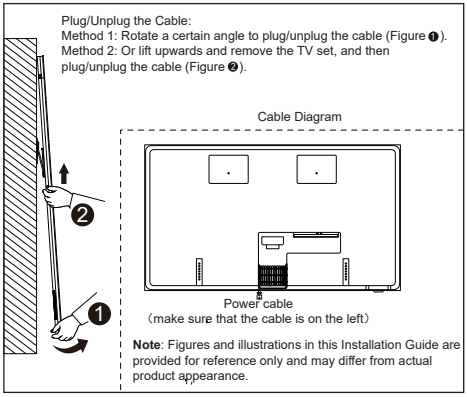

Magnetic Bezel Installation

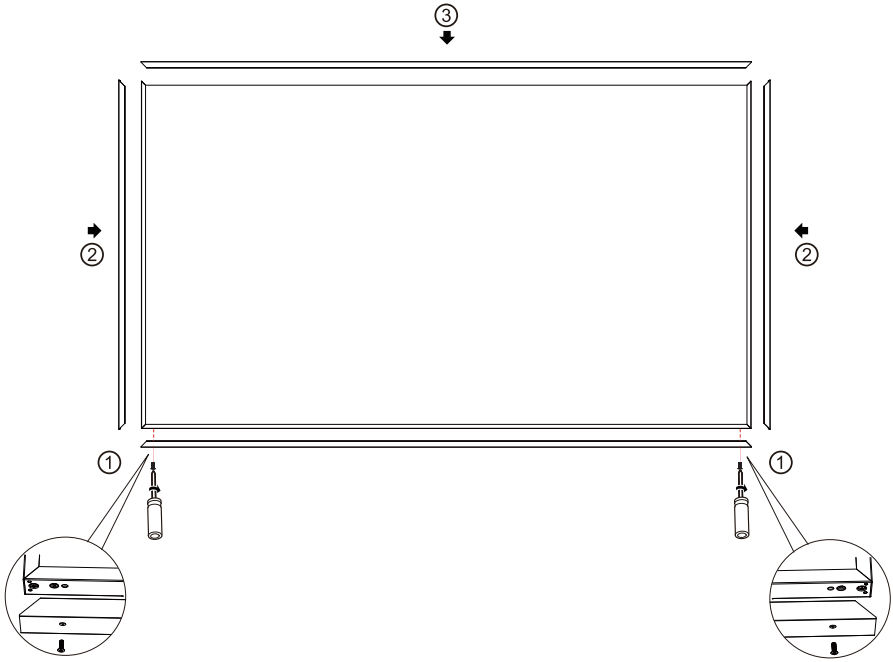

Note: Before moving the TV, remove the magnetic bezels first to prevent them from falling.

Connect to the Internet

The following instructions are just the usual ways to connect your TV to the wired or wireless network. The connection method may be different depending on your actual network configuration. If you have any questions about your home network, please refer to your Internet service provider.

Wired connection

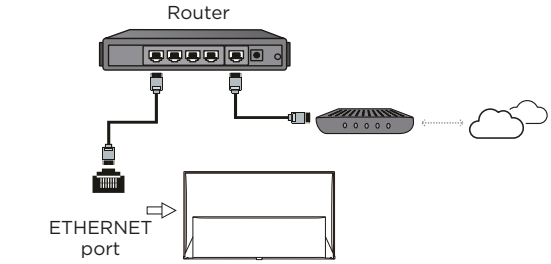

Wireless connection

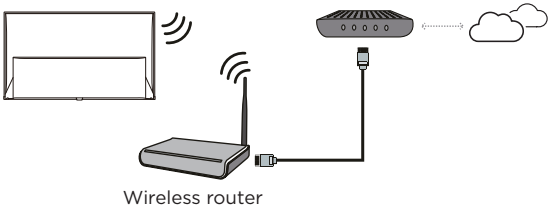

Network settings

1. Press ⌂ on the remote control to display the TV homepage.
2. Press ⚙ on the remote control, select **Settings** and press **OK** to enter the **Settings** menu.
3. Select **Network & Internet**, press **OK** to enter the submenu and follow the on-screen guidance to set up your network.

Switch the TV on and off

1. When the power cord is connected, the TV will be turned on directly or be in standby mode. If the TV is in standby mode, press the ⏻ button on the set or the ⏻ button on the remote control to turn it on.
2. To put the TV into standby mode, press the ⏻ button on the remote control. The TV set remains powered on, but with low energy consumption.
3. To completely turn the TV off, unplug the power cord from the wall outlet.

Initial setup

The first time you switch the TV on, the **Welcome** screen appears, which guides you through the initial setup process. Follow the on-screen instructions to finish the initial setup process including selecting the language, connecting to the network, and more. During each step, either make a choice or skip the step. If you skip a step, you can perform the setup later from the settings menu.

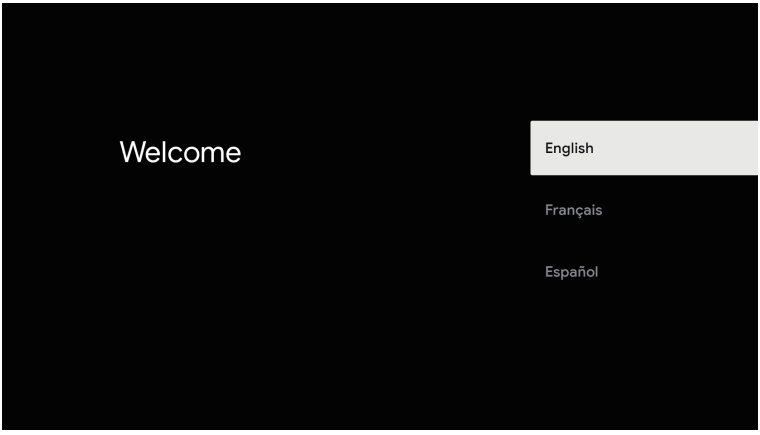

Basic TV operations

Accessing channels

In TV homepage, press the button on the remote control to display the live antenna TV channels and select **Search** to scan channels. Press the **CH** ∧/∨ buttons to change channels.

Watching connected devices

In TV homepage, press on the remote control, select **Inputs** and press **OK** to display the source list. Press the **Left/Right** button to select input source and press **OK** to confirm.

Adjusting volume

Press the **VOL** +/— buttons on the remote control to increase or decrease the volume. Press the button on the remote control to mute the sound.

Using the power button on your TV

In addition to using the remote control to control your TV, you can also use the button on your TV.

You can turn on the TV from standby mode by pressing the ⏻ button on your TV.

While the TV is on, the multi-function menu appears by pressing the ⏻ button on your TV. For more information on how to use the multi-function menu, please refer to the figure below.

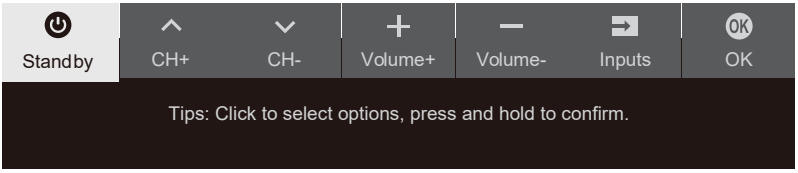

• Press the ⏻ button to move the highlight to the next function selection.

• Press and hold the ⏻ button for more than 2 seconds to confirm your selection.

Note: Please refer to the Quick Start Guide to find the ⏻ button on your TV set.

Accessing TV homepage

The basic TV homepage allows you to enjoy Internet Applications, specially adapted Internet websites, and change your TV settings.

WARNING:

- Configure the network settings before using Smart TV applications.
- Slow responses and/or interruptions may occur, depending on your network conditions.
- If you experience a problem using an application, please contact the content provider.
- According to circumstances of the content provider, an application's updates or the application itself may be discontinued.
- Depending on your country's regulations, some applications may have limited service or not be supported.
- Changes in application content may be made without prior notice by the service provider.

1. Press ⌂ on the remote control to display the TV homepage.
2. Press the **Up/Down/Left/Right** button and **OK** to enter the desired Apps, functions or settings.
3. Press ← to return to the homepage.

Note: Since the connection to the Internet takes time, it's recommended that you wait a few minutes to use the Smart TV feature after you activate the TV from standby mode.

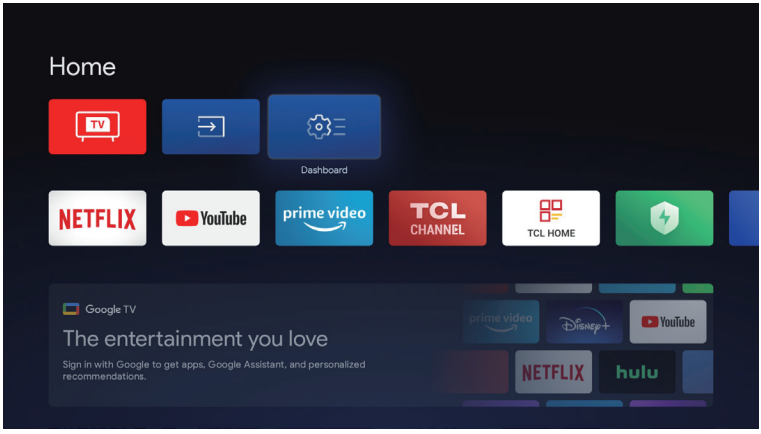

Using TV settings menu

Allow you to configure settings of TV features, such as channels, display and sound, network, accounts, privacy, apps, system, remotes and accessories, etc.

1. Press ⌂ on the remote control to display the TV homepage.
2. Press ⚙ on the remote control, select **Settings** and press **OK** to enter the **Settings** menu.
3. Press the **Up/Down** button to select menu options, then press **OK** to enter the option list or the corresponding submenu.
4. Press ← to return to the previous menu.
5. Press ⌂ to close the settings menu and return to the homepage.

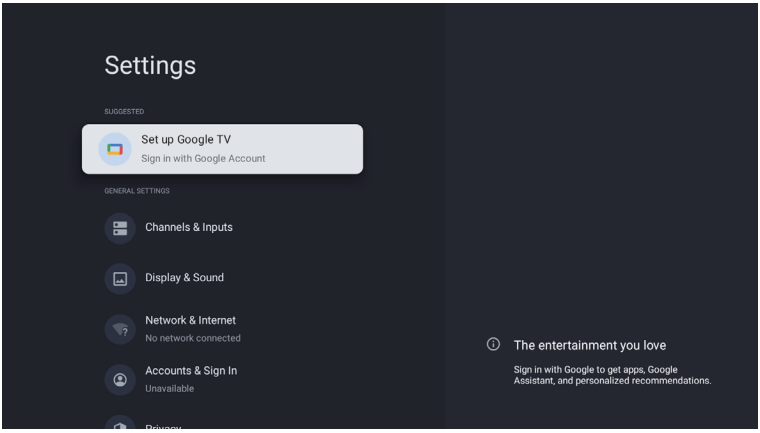

General settings

- **Channels & Inputs:** Adjust the channel settings, scan for channels and adjust input settings.
- **Display & Sound:** Adjust the picture settings and adjust to experience the different sound effects.
- **Network & Internet:** Configure the Wi-Fi and internet settings. The network status is also displayed.
- **Accounts & Sign In:** Sign in your Google account to make the most of your TV.
- **Privacy:** Adjust your privacy settings.
- **Apps:** View the list of recently opened apps, all installed apps and the system apps. You can also add permissions for different apps, configure special app access to optimized energy and set usage access, notification access, and more.
- **System:** Adjust the system settings of the TV.
- **Remotes & Accessories:** Search for Bluetooth accessories and pair them with your TV. You can set up your TV to make it visible to all nearby Bluetooth devices.
- **Help & Feedback:** Visit Google TV Help.

Adjusting your TV

Channels & Inputs

The channels and inputs menus are used to scan and maintain your channels, and access the Electronic Program Guide. Adjust the input settings. The menus are only available in TV mode.

1. In TV mode, press ⚙ on the remote control, select **Settings** and go to **Channels & Inputs**.
2. Press the **Up/Down** button to select the item you want to set, and then press **OK**.
3. Set the channel and input items to your preferences one by one.

Channels

- **Channel Scan:** Search channels automatically or manually.

  Country/Region: The TV installs and arranges channels according to your country or region. Press the **Up/Down** button to select **Country/Region**, and press **OK** to enter. Create or enter your password. Press the **Up/Down** button to select your country or region and press **OK** to confirm.

  Scan Automatically: Press the **Up/Down** button to select **Scan Automatically** and press **OK** to enter. Select the tuner mode and channel type you wanted, then press the **Down** button to select **Search** and press **OK** to start scanning channels.

  Manually Scan: Scan channels manually by entering parameters such as channel number or frequency.

- **Edit Channels:** After the automatic search, channels are arranged in a preset order. If you want to edit the channel list, select **Edit Channels** and press **OK** to enter.
- **Clear Channel List:** Reset all channel lists.
- **EPG:** Access electronic program guide.

Inputs

You can see the connected input, standby inputs and set the name of these inputs and select whether to display them in the input list.

- **External devices control (CEC):** Control the devices connected by HDMI.

Display & Sound

The menus are used to obtain the best picture and audio settings according to your preference and the type of program you are watching. The menus can be set up at every broadcasting type and every input source.

1. Press ⚙ on the remote control, select **Settings** and go to **Display & Sound**.
2. Press the **Up/Down** button to select the item you want to set, and then press **OK**.
3. Set the picture and audio items to your preferences one by one.

   Note: The options available may vary depending on the picture mode you set.

Intelligent Settings

- **Intelligent Picture:** Automatically adjusts picture settings for the best viewing experience. Select an option and press **OK** to enable or disable.
- **Intelligent Sound:** Automatically adjusts audio settings based on content for the best listening experience. Select an option and press **OK** to enable or disable.

Picture

- **Picture Mode:** Select a picture mode optimized for different viewing conditions. Press the **Up/Down** button to select an option and then press **OK**.
- **Brightness:** Adjust the luminance level of the screen. Press the **Left/Right** button to set the preferred brightness.
- **Color Saturation:** Adjust the color saturation level of the picture. Press the **Left/Right** button to set the preferred color saturation.
- **Advanced Settings:** Adjust more picture options.

  Brightness Settings: Adjust settings such as Contrast, Brightness and Black level.

  Color: Adjust settings such as Color saturation, Temperature and Tint.

  Clarity: Adjust settings such as Sharpness and Digital Noise Reduction.

  Motion: Control settings such as Motion Clarity and Judder Reduction.

  Expert Calibration: Adjust advanced picture settings such as White Balance and Color Space.
- **Screen Settings:** Adjust settings such as Aspect Ratio.
- **Apply All Picture Settings:** Select whether to apply the picture settings to the current input or to all inputs.
- **Restore Defaults:** Reset all custom picture settings. Press the **Left/Right** button to select **OK** and then press **OK**.

Audio

- **Sound Mode:** Select a sound mode that best suits your audio needs. Enter the **Sound Mode** menu and press the **Up/Down** button to select an option and then press **OK**.
- **Audio Delay:** Adjust the delay time between audio and video tracks.
- **Audio Output:** Select the device you wish to output audio. Enter the menu and press the **Up/Down** button to select an option and then press **OK**.

- **Audio Processing:** Choose the right processing to enjoy a more realistic and immersive sound experience. Enter the menu and press the **Up/Down** button to select an option and then press **OK**.
- **Advanced Settings:** Adjust more sound options.

  Audio Only Mode: Select to switch off the TV display and only listen to the sound from the TV. The TV screen will turn off in about 10 seconds. In audio only mode, press any key to turn on the TV screen again.

  Balance: Adjust the volume of the left and right speakers.

  Auto Volume Control: Equalize audio for a more relaxed experience.

  Digital Audio Out: Select the audio format for the audio system connected with HDMI or optical digital cable.

  DTS DRC: This option is valid for DTS encoded format content.

System Settings

Follow these instructions to configure various system settings.

1. Press ⌂ on the remote control to display the TV homepage.
2. Press ⚙ on the remote control, select **Settings** and press **OK** to enter the **Settings** menu.
3. Press the **Up/Down** button to select **System** and then press **OK**.
4. Press the **Up/Down** button to select the items you want to set, and then press **OK**.

- **Accessibility:** Configure captions, high contrast text, text to speech. Set the talkback and switch access.
- **About:** Check the detail information of the TV, such as system update, device name, status, model and version, product information, etc. You can also view legal information, turn on the auto update and reset the TV.
- **Date & Time:** This function needs network connection and then you can set the date and time. You can choose whether to auto synchronize or to manually set the date and time. You can also set the time zone and choose to use 24-hour format.
- **Language:** Select a menu language. The selected menu language will also be set as the voice recognition language.
- **Keyboard:** Configure the settings of the on-screen keyboard. You can set language and check the version and user agreements of the current keyboard. You can also add new virtual keyboards or active virtual remote keyboard.
- **Storage:** View the memory usage status, clear data, cache and defaults, and to open, force stop or disable an app. Besides, you can add or remove an app's permissions to access your contacts, location, and microphone, etc.
- **Ambient mode:** You should set up Google TV to enable the function which can show the weather, time, the owner's name, etc. with Ambient.
- **Power & Energy:** Configure the screen saver settings, including power on behavior, the inactivity time after which to turn off display, the sleep timer. Configure quick start function and screenless service.
- **System Sounds:** You can set the system sounds to off, low, medium or high.
- **AirPlay and HomeKit Settings:** Configure Apple AirPlay and HomeKit.
- **Parental Controls:** You can set the parental control feature to restrict the viewing of programs by children under the specified age limit. You must set a four-digit password before using the parental control feature. Password will be required to watch a program subject to watching restriction. Enter your password to access the submenu.
- **Game Master:** Turn on this function to enable VRR (Variable Refresh Rate) to allow smooth gaming and eliminate screen tearing. The refresh rate can dynamically change to up to 144Hz.
- **Advanced Settings:** Set the LED indicator in standby mode and choose the environment in which your TV is used.
- **Restart:** Restart your TV.

Other information

Password in Parental Control

- Set the password in the **Settings** > **System** > **Parental Controls** menu.
- The super password is 0423. If you forget your code, enter the super password to override any existing codes.

Troubleshooting

Please check the following list before requesting service.

There is no picture or sound.

- Make sure the power cord is properly inserted in the power outlet.
- Make sure the source type is set correctly.
- Make sure the antenna is properly connected.
- Make sure the volume is not set to minimum or the sound is not set to mute.
- Make sure the headphones are not connected.
- The TV may be receiving a signal other than from TV broadcasting stations.

Picture is not clear.

- Make sure the antenna cable is properly connected.
- Consider whether your TV signal is being properly received.
- Poor picture quality can occur due to a VHS camera, camcorder, or other peripheral being connected at the same time. Switch off one of the other peripherals.
- The 'ghost' or double image may be caused by obstruction to the antenna due to high-rise buildings or hills. Using a highly directional antenna may improve the picture quality.
- The horizontal dotted lines shown on the pictures may be caused by electrical interference, e.g., hair dryer, nearby neon lights, etc. Turn off or remove these.

Picture is too dark, too light or tinted.

- Check the color adjustment.
- Check the brightness setting.
- Check the sharpness function.

Remote control does not work.

- Check the batteries of the remote control.
- Make sure the remote sensor window on the front of the TV is not in strong fluorescent lighting.
- Try to clean the remote sensor window on the front of the TV with a soft cloth.

If the above suggestions do not solve your technical issue, please refer to the warranty card for service information.

Broadcasting & Operating Environment

Broadcasting system	US System NTSC-M ATSC standard (8VSB), QAM
Receiving Channels	VHF2-13 UHF14-69 CATV 14-36 (A)-(W) 37-59 (AA)-(WW) 60-85 (AAA)-(ZZZ) 86-94 (86)-(94)95-99 (A-5)-(A-1) 100-135 (100)-(135) 01 (4A)
Tuner type	Frequency synthesized
Operating Temperature	5°C to 35°C (41°F to 95°F)
Operating Humidity	20% to 80%, non-condensing
Storage Temperature	-15°C to 45°C (5°F to 113°F)
Storage Humidity	10% to 90%, non-condensing

Battery CAUTION & Disposal Information

1. For best results, use alkaline-type batteries.
2. Do not mix Alkaline, Standard (Carbon-Zinc), or Rechargeable (Nickel Cadmium or Nickel Metal Hydride) batteries.
3. Always replace depleted batteries with two same brand-new batteries from the same manufacturer. Never use damaged batteries.
4. Do not use Rechargeable (Nickel Cadmium or Nickel Metal Hydride) batteries.
5. Install only new batteries of the same type in your product. There is a risk of fire or explosion if the battery is replaced by an incorrect type.
6. Do not mix old and new batteries.
7. Batteries should not be exposed to excessive heat, such as prolonged direct sunlight, open flame, or fire of any kind as it may result in an explosion, or leakage of flammable liquid, or gas.
8. Batteries should not be exposed to extremely low air pressure as it may result in an explosion or the leakage of flammable liquid or gas.
9. Failure to insert batteries in the correct polarity, as indicated in the battery compartment, may shorten the life of the batteries or cause batteries to leak.
10. Batteries should be recycled or disposed of as per state and local guidelines. Do not dispose of batteries in a fire, hot oven, or mechanically crushing or cutting a battery, which may result in an explosion.

ELECTRONICS & PACKAGING RECYCLING INFORMATION

For information on recycling your old TVs, sound bars, and home comfort products, and to find drop-off locations in your area, please visit the “Electronics Recycling” area of the TCL website at **www.tcl.com**. Click on our convenient interactive map to quickly locate a solution in your community. TCL encourages consumers to always look for a recycling or reuse alternative to discarding televisions and other electronics, and in many areas TCL has programs for consumers to drop-off and recycle televisions free of charge.

Warning: To avoid the danger of suffocation, keep plastic packaging away from pets, babies, and children. Do not use packaging bags in cribs, beds, carriages, or playpens.

Legal Statement

Due to the various capabilities of products featuring the SmartTV - Services, as well as limitations in the available content, certain features, applications, and services may not be available on all devices or in all territories. Some features on SmartTV may also require additional peripheral devices or membership fees that are sold separately. Please visit our website for more information on specific device information and content availability. The services and availability of content through SmartTV are subject to change from time to time without prior notice.

All content and services accessible through this device belong to third parties and are protected by copyright, patent, trademark and/or other intellectual property laws. Such content and services are provided solely for your personal noncommercial use. You may not use any content or services in a manner that has not been authorized by the content owner or service provider. Without limiting the foregoing, unless expressly authorized by the applicable content owner or service provider, you may not modify, copy, republish, upload, post, transmit, translate, sell, create derivative works, exploit, or distribute in any manner or medium any content or services displayed through this device.

YOU EXPRESSLY ACKNOWLEDGE AND AGREE THAT USE OF THE DEVICE IS AT YOUR SOLE RISK AND THAT THE ENTIRE RISK AS TO SATISFACTORY QUALITY, PERFORMANCE AND ACCURACY IS WITH YOU. THE DEVICE AND ALL THIRD PARTY CONTENT AND SERVICES ARE PROVIDED “AS IS” WITHOUT WARRANTY OF ANY KIND, EITHER EXPRESS OR IMPLIED. TCL EXPRESSLY DISCLAIMS ALL WARRANTIES AND CONDITIONS WITH RESPECT TO THE DEVICE AND ANY CONTENT AND SERVICES, EITHER EXPRESS OR, IMPLIED, INCLUDING BUT NOT LIMITED TO, WARRANTIES OF MERCHANTABILITY, OF SATISFACTORY QUALITY, FITNESS FOR A PARTICULAR PURPOSE, OF ACCURACY, OF QUIET ENJOYMENT, AND NON-INFRINGEMENT OF THIRD PARTY RIGHTS. TCL DOES NOT GUARANTEE THE ACCURACY, VALIDITY, TIMELINESS, LEGALITY, OR COMPLETENESS OF ANY CONTENT OR SERVICE MADE AVAILABLE THROUGH THIS DEVICE AND DOES NOT WARRANT THAT THE DEVICE, CONTENT OR SERVICES WILL MEET YOUR REQUIREMENTS, OR THAT OPERATION OF THE DEVICE OR SERVICES WILL BE UNINTERRUPTED OR ERROR-FREE. UNDER NO CIRCUMSTANCES, INCLUDING NEGLIGENCE, SHALL TCL BE LIABLE, WHETHER IN CONTRACT OR TORT, FOR ANY DIRECT, INDIRECT, INCIDENTAL, SPECIAL OR CONSEQUENTIAL DAMAGES, ATTORNEY FEES, EXPENSES, OR ANY OTHER DAMAGES ARISING OUT OF, OR IN CONNECTION WITH, ANY INFORMATION CONTAINED IN, OR AS A RESULT OF THE USE OF THE DEVICE, OR ANY CONTENT OR SERVICE ACCESSED BY YOU OR ANY THIRD PARTY, EVEN IF ADVISED OF THE POSSIBILITY OF SUCH DAMAGES.

Third party services may be changed, suspended, removed, terminated or interrupted, or access may be disabled at any time, without notice, and TCL makes no representation or warranty that any content or service will remain available for any period of time. Content and services are transmitted by third parties by means of networks and transmission facilities over which TCL has no control. Without limiting the generality of this disclaimer, TCL expressly disclaims any responsibility or liability for any change, interruption, disabling, removal of or suspension of any content or service made available through this device. TCL may impose limits on the use of or access to certain services or content, in any case and without notice or liability. TCL is neither responsible nor liable for customer service related to the content and services. Any question or request for service relating to the content or services should be made directly to the respective content and service providers.

TCL North America Limited Warranty

All New TCL Product Models including LCD/LED Televisions, Sound Bars, and Appliances including Window Air Conditioners, Portable and Through-The-Wall Air Conditioners, Dehumidifiers, Air Purifiers, and Robot Vacuums (each individually referred to as a "Product" or "Unit", and together referred to as the "Products").

What your warranty covers: Defects in materials or workmanship to the original owner of this TCL Product when purchased as new from an Authorized Dealer of TCL brand Products in the United States and packaged with this warranty statement.

New Products (Non-Commercial Use)

For how long after your purchase:

• **One (1) year from date of purchase** for parts and labor for **non-commercial use.**

New Products (Commercial Use)

For how long after your purchase:

• **Six (6) months from date of purchase** for parts and labor for **commercial use.**

Commercial use includes, but is not limited to, the use of this Product in a commercial or business environment, the use of this Product in an institution or for institutional purposes, or other commercial purposes including rental purposes.

What we will do

- At TCL's discretion, (1) pay an Authorized TCL Service Center for both labor charges and parts to repair your Product, or (2) replace your Product with a new or refurbished/remanufactured equivalent value Product. The decision to repair or replace will be made solely by TCL. See section entitled "How to get service."

How to get service

- Before submitting a request for warranty service, please visit support.tcl.com for helpful FAQs and additional troubleshooting suggestions.
- To get warranty service, contact TCL Customer Support by visiting support.tcl.com/contact-us. Please have your Product type, model number, serial number, and ZIP code ready. Troubleshooting and prior approval from a TCL representative MUST occur before sending in your Product to a TCL Service Center.
- A representative must troubleshoot your problem over the telephone, via chat, or through e-mail before receiving service. If it is determined that your Unit requires service, the service location will be at the sole discretion of TCL based upon the Limited Warranty Statement.
- At the sole discretion of TCL, television screen sizes 43-inches and smaller will either be repaired at an Authorized TCL Service Center or directly exchanged for a new or refurbished/re-certified Unit. At the sole discretion of TCL, television screen sizes 44-inches or larger will either be repaired or directly exchanged for a new or refurbished/re-certified Unit at an Authorized TCL Service Center or in-home. At the sole discretion of TCL, Sound Bars, and Appliances including Window Air Conditioners, Portable and Through-The-Wall Air Conditioners, Dehumidifiers, Air Purifiers, and Robot Vacuums will either be repaired or directly exchanged for a new or refurbished/re-certified Unit at an Authorized TCL Service Center or in-home. In the event of a service visit where the on-site technician, in his-her sole discretion, deems the home or property

conditions to be hazardous and/or unsafe, TCL reserves the right to cancel or re-schedule the service visit, or opt for an exchange of the in-warranty Unit for a refurbished/re-certified Unit in lieu of the in-home service visit.

- TCL is not responsible for transportation costs for warranty coverage, including but not limited to Unit repair or replacement, to the Authorized TCL Service Center or TCL-designated address. However, TCL will pay for return shipping to a United States address only. TCL will provide instructions for packaging and shipping the Unit to the Authorized TCL Service Center or TCL-designated address. **Units that are improperly packed and damaged during shipping are not covered under your limited Product warranty.**
- Proof of purchase in the form of a bill of sale or receipted invoice from an Authorized Dealer which is evidence that the Product is within the warranty period must be presented to obtain warranty service.
- In the event that a Unit is to be replaced, a picture of the back of the Unit showing the model and serial number and picture of the Product issue itself may be required.
- PRE-AUTHORIZATION MUST BE OBTAINED BEFORE (1) SENDING ANY PRODUCT TO AN AUTHORIZED TCL SERVICE CENTER, OR (2) OBTAINING ANY IN-HOME REPAIR/ REPLACEMENT/RENTAL SERVICES.

What your warranty does not cover

- A Unit sold in "As-Is", "Used", "Factory Reconditioned", "Factory Re-Certified", or "Refurbished", condition or with faults.
- Damage caused by transportation or handling, including damage during shipment from a Retailer (please contact your Retailer for assistance).
- Extended Service Plans purchased from Retailers. Please contact your Retailer for assistance.
- Customer instruction. (Your Owner's Manual describes how to install, adjust, and operate your Unit. Any additional information should be obtained from your Authorized Dealer).
- Service calls to your home for delivery or pick-up, installation, instruction, replacement of house fuses, connection of house wiring or plumbing, or to correct unauthorized repairs.
- Installation and related adjustments, or damage resulting from installation.
- Damage resulting from non-approved installation or repair methods.
- Failure of the Product to perform due to signal reception problems not caused by your Unit, or due to power failures or interruptions, or inadequate electrical service.
- Damage from misuse, abuse, neglect, insects, normal wear and tear, cosmetic damage, mishandling, faulty installation, inadequate electrical wiring, or power line surges.
- Damage caused by operating the Product in a corrosive or wet atmosphere.
- Markings or images on the television's panel resulting from viewing fixed images (including but not limited to certain 4:3 images on wide screen televisions, or data or images in fixed screen locations from banners, video games, or certain broadcast networks).
- Units that have original factory serial numbers that are unreadable or missing, or that have been changed, defaced, or altered in any manner.
- Batteries.
- A television that has been modified or incorporated into other Products, or that has had the serial number removed or altered.
- Use of accessories or components that are not compatible with this Product.
- A Unit purchased or serviced outside of the United States.
- Costs of shipping the Unit to the Authorized TCL Service Center or TCL-designated address. TCL will pay for return shipping to the customer to a United States address only.

- Acts of nature or God (as illustrative examples and for the avoidance of doubt, such acts of nature or God include but are not limited to damage caused by earthquakes, fires, lightning, or flood whether caused by nature or humans).
- Special, incidental, or consequential damages.

LIMITATION OF WARRANTY

- THE WARRANTY STATED ABOVE IS THE ONLY WARRANTY APPLICABLE TO THIS PRODUCT. NO VERBAL OR WRITTEN INFORMATION GIVEN BY TTE TECHNOLOGY, INC. DBA TCL NORTH AMERICA, ITS AGENTS OR EMPLOYEES SHALL CREATE A GUARANTY OR IN ANY WAY INCREASE OR MODIFY THE SCOPE OF THIS WARRANTY.
- REPAIR OR REPLACEMENT AS PROVIDED UNDER THIS WARRANTY IS THE EXCLUSIVE REMEDY OF THE CONSUMER. TTE TECHNOLOGY, INC. DBA TCL NORTH AMERICA SHALL NOT BE LIABLE FOR SPECIAL, INCIDENTAL, OR CONSEQUENTIAL DAMAGES RESULTING FROM THE USE OF THIS PRODUCT OR ARISING OUT OF ANY BREACH OF ANY EXPRESS OR IMPLIED WARRANTY ON THIS PRODUCT. THIS DISCLAIMER OF WARRANTIES AND LIMITED WARRANTY ARE GOVERNED BY THE LAWS OF THE STATE OF CALIFORNIA. EXCEPT TO THE EXTENT PROHIBITED BY APPLICABLE LAW, ANY IMPLIED WARRANTY OF MERCHANTABILITY OR FITNESS FOR A PARTICULAR PURPOSE ON THIS PRODUCT IS LIMITED TO THE APPLICABLE WARRANTY AND WARRANTY PERIOD SET FORTH ABOVE. THIS WARRANTY IS SUBJECT TO CHANGE WITHOUT NOTICE. PLEASE VISIT WWW.TCL.COM TO VIEW THE MOST CURRENT VERSION.

How State Law relates to this warranty

- Some states may not allow the exclusion or limitation of incidental or consequential damages, or limitations on how long an implied warranty lasts, so the above limitations or exclusions may not apply to you.
- This warranty gives you specific legal rights, and you also may have other rights that vary from state to state.

If you purchased your Unit outside of the United States or seek warranty service coverage outside of the United States, this warranty does not apply. Contact your dealer for warranty information.

Service calls which do not involve defective materials or workmanship are not covered by this limited warranty. Costs of such service calls are the sole responsibility of the purchaser.