Hi! Let's Get Started.

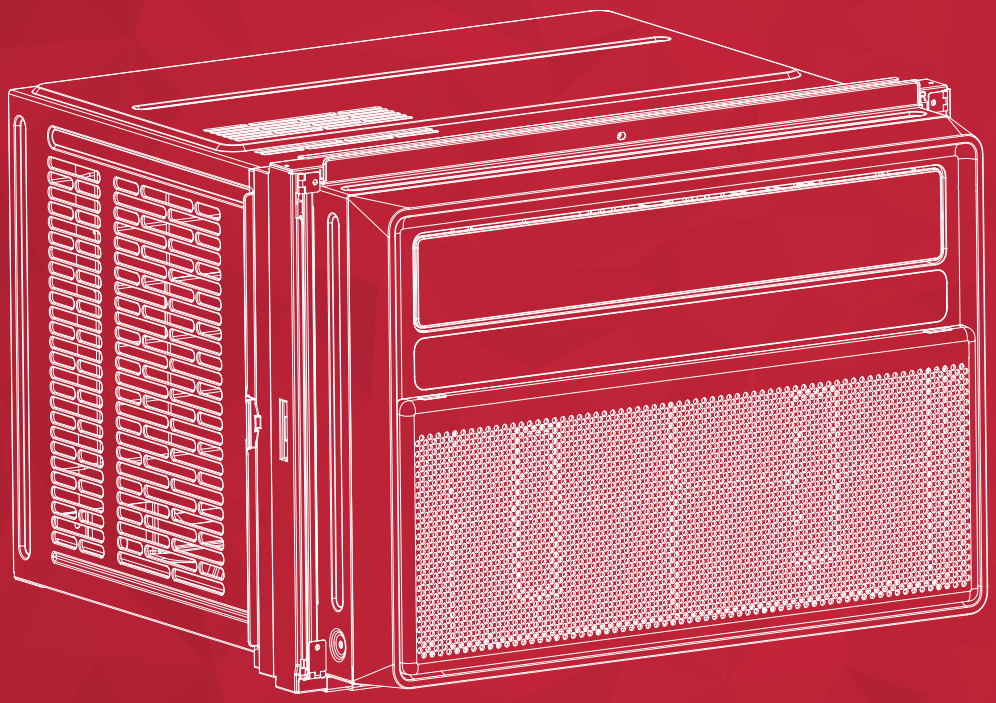

QL-Series
Window Air Conditioner
User Manual

Table of Contents

Register and Protect Your Purchase 3

Important Safety Information (Please Review Before Use) 4

What's in the Box 7

TCL Home App Setup 8

Introduction 10

Operating Instructions 11

Setup & Installation 13

Other Features 19

Maintenance 20

Warranty Information 21

Trouble shooting 24

Register and protect your purchase

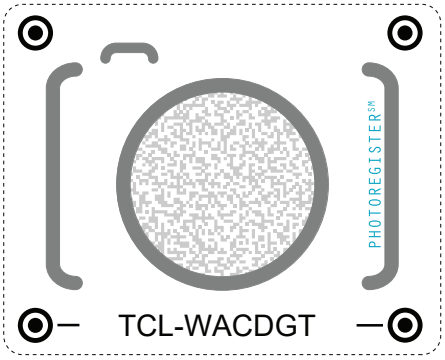

Reglster easlly with your smartphone

Text a photo of
the camera icon to 71403

Or register online at www.tclusa.com/register

Need help? Visit photoregister.com/help or text HELP to71403

Add a TCL Protection Plan when you register your product and be covered from life's mishaps

Thank you for choosing TCL. We want your ownership experience to bring you as much joy as the product you purchased does, so we'e offering you a special price on TCL Protection Plans when you purchase during registration. Add a TCL Protection Plan within your first 30 days of ownership to receive the best value and we'll make sure nothing gets in the way of you enjoying your new product

Benefits & Description	PROTECT	PLUS
Extended Manufacturer Coverage Extended parts & labor coverage for manufacturer defects.	Up To 4 Years	Up To 4 Years
Priority Service Free shipping and rapid turn-around tim	3-5 Days	3-5 Days
Product Replacement Free 1-time replacement if product cannot be fixed.	⊕	⊕
TCL Parts & Service Genuine TCL parts & factory certified service.	⊕	⊕
No Deductible $0 out of pocket expense.	⊕	⊕
Accidental Damage Protection Coverage for drops, breaks and spills starts after 30 days.		⊕

*Extended service plans (i.e., "protect"and "plus"plans) are only offered in the United States (US). All TCL products continue to offer a limited consumer warranty in both the US and Canada. Please refer to the warranty section in this guide for additional details on warranty information.

IMPORTANT SAFETY INSTRUCTIONS

Before installing and using your air conditioner, please read this owner's manual carefully. Store this manual in a safe place for future reference.

Your safety and the safety of others is very important to us. Please pay attention to all safety messages outlined in this owner's manual.

WARNING: To reduce the risk of fire, electrical shock or injury when using your air conditioner, follow the following basic precautions:

ELECTRICAL REQUIREMENTS

The electrical ratings for your air conditioner are listed on the model and serial number label located on the front right hand side of theunit (when facing the front).

REGISTER YOUR APPLIANCE

You can register your appliance online by going to register.tcl.com

Be sure to retain your original sales receipt. A valid proof of purchase is required for all warranty claims.

BATTERY WARNING STATEMENT

Do not mix old and new batteries and do not mix alkaline, standard (carbon-zinc) or rechargeable (ni-cad, ni-mh, etc.) batteries

Document your model and serial numbers here:

Model #_____ Serial #_____

You can locate your 20 digit serial number underneath the bar code (On the right hand side of the AC).

WARNING	Specific electrical requirements are shown in the diagram below.Follow there quirements below for the type of plug on the power supply cord.	
Electrical Shock Hazard Plug into a grounded 3 prong outlet. Do not remove the ground prong. Do not use an adapter Do not use an extension cord. Failure to follow these instructions can resultin death, fire, or electrical shock	Wiring Requirements	Power Supply Cord
	• (8K-12K) (0-12 amps) • 8K (10 amp time-delay fuse or circuit breaker) • 10K (13 amp time-delay fuse or circuit breaker) • 12K (15 amp time-delay fuse or circuit breaker) • Use on single outlet circuit only	

RECOMMENDED GROUND METHOD

For your personal safety, this air conditioner must be grounded. This air conditioner is equipped with a 3 prong power supply cord with a grounded plug. To minimize the possibility of electrical shock, the cord must be plugged into a 3 prong outlet and grounded in accordance with all local codes and ordinances. If a 3 prong outlet is not available,it is the customer's responsibility to have a properly grounded 3 prong outlet installed by a qualified electrician.

DO NOT RETURN TO STORE

WE ARE READY TO HELP contact us first with any questions

TCL SUPPORT:
support.tcl.com/us
1-800-825-6747

Introduction to Refrigerants R32

The refrigerants used for air conditioners are environmentally friendly hydrocarbons R32.
This kind of erant is combustible and odorless. Moreover, it can burn and explode under certain condition. However, there will be no risk of burning and explosion if you comply with the following table to install your air conditioner in a room with an appropriate area and use it correctly.
Compared with ordinary refrigerants, Refrigerant R32 is environmentally friendly and do not destroy the ozone sphere and that itsvalue of greenhouse effect is also very low.

Warning

- Please read the manual before installation,using,maintenance.
- Do not use means to accelerate the defrosting process or to clean, other than those recommended by the manufacturer;
- The appliance shall be stored in a room without continuously operating ignition sources (for example: open flames, an operating gas appliance or an operating electric heater.
- Do not pierce or burn.
  - Be aware that refrigerants may not contain an odour.
  - information for handling, installation, cleaning, servicing and disposal of refrigerant.
  - a warning to keep any required ventilation openings clear of obstruction.
  - a notice that servicing shall be performed only as recommended by the manufacturer.
  - Information for qualification of workers
  - Information on servicing
  - Repairs to sealed components
  - Repairs to Intrinsically safe components
  - Cabling
  - Detection of flammable refrigerants
  - Removal and evacuation
  - Charging procedures
  - Decommissioning, labelling and recovery
- Please contact the nearest after-sale service center when maintenance is necessary. At the time of maintenance, the maintenance personnel must strictly comply with the Operation Manual provided by the corresponding manufacturer and any non-professional is prohibited to maintain the air conditioner.
- The handling, installation, storage, servicing and disposal must comply with the] provisions of gas-related national laws and regulations, and also national wiring regulation.
- It is necessary to clear away the refrigerant in the system when maintaining or scrapping an air conditioner. Be aware that refrigerants may not contain an odour.

This appliance is not intended for use by persons (including children) with reduced physical, sensory or mental capabilitiesor supervision or instruction concerning use of the appliance by a person responsible for their safety.
Children should be supervised to ensure that they do not play with the appliance.
Unit operation limits: Outdoor side 61~110, 80%RH, indoor side 61~90, 80%RH.

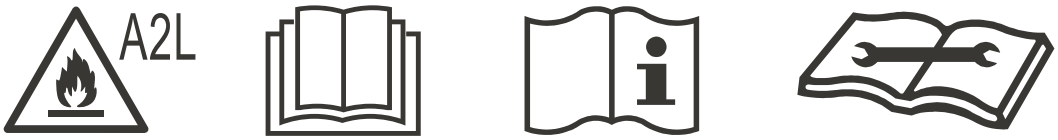

Installation Safety Principles

1. Site Safety

Open Flames Prohibited



Ventilation Necessary



2. Operation Safety

Mind Static Electricity



Open Flames Prohibited
Must wear protective clothing and anti-static gloves



Don`t use mobile phone



3. Installation Safety

• Refrigerant Leak Detector • Appropriate Installation Location		The left picture is the schematic diagram of a refrigerant leak detector.

Please note that:

1. The installation site should be in a well-ventilated area.
2. When installing an air conditioner, it is necessary to take appropriate anti-static measures such as wear anti-static clothing and/or gloves.
3. Installation or maintenance location should not be surrounded by obstacles or close to any heat source, flammable, and/or explosive areas or objects.
4. If the product suers refrigerant leak during the installation, all personnel should go out till the refrigerant leaks completely for 15 minutes.If the product is damaged, a professional must carry such damages product back to the maintenance station. It is prohibited to weld therefrigerant pipe or conduct other operations on the contaminated site.
5. The air conditioner unit needs to sit on a flat even surface.
6. It is necessary to avoid the places where there are other electrical products, power switch plugs and sockets, kitchen cabinet, bed, sofa and other valuables directly under the lines on two sides of the indoor unit.
7. Any ventilation openings of unit should be free from obstructions.

What's in the Box

Open the carton and remove the below parts.

APPEARANCE	PART NAME	QUANTITY
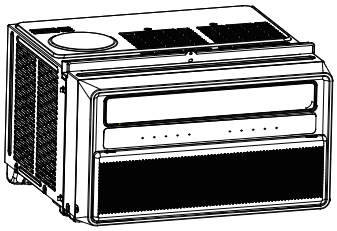	Window Air Conditioner	1
	Remote Control	1
	Long Foam Seal (Non-Adhesive)	1
	Long Foam Seal (Adhesive)	1
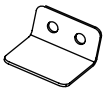	Security Bracket	1
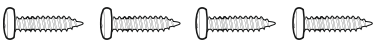	¾" Screw	4
	½" Screw	3
	Remote Control Battery	2
	Modelling Material (Plasticene)	1
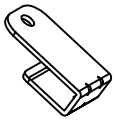	Installation bracket (Atuxiliary in some special window, not necessary.)	4

Note: Illustrations in this manual are for explanatory purposes only. Product design and aesthetics may vary. Please search the entire package for the contents listed above as they may be packaged on top or underneath the main AC unit.

TCL Home App Setup

WiFi App Installation
(for WiFi models only)

TCL Home App Setup (Smart Phone Required)

Step 1:Download & Install the TCL Home App
Scan the QR code below or search for the TCL Home App in the Apple or Google app store. Download and open the app.

Step 2: Create an Account
Once you have opened the app, select “Create account.” You will then be sent a verification code to your email. Input the code and continue.

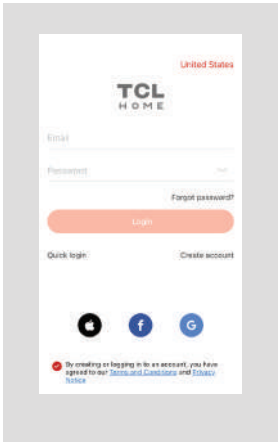

Step 3: Add Your Device
Select the “Add Devices” button and follow the in-app instructions to complete the setup.

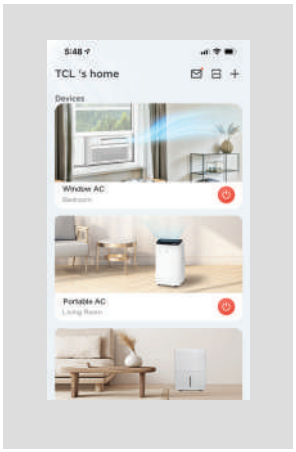

Note: The App only supports the 2.4 GHz WiFi band (all routers have a 2.4 GHz band). Please connect to the 2.4 GHz band before you begin the app setup process.

Matter Setup (Smart Phone OR Smart Speaker Required)

Smart ecosystems and their companion speakers can only support matter when using these ersions or newer.

Device	Version
Alexa App	2.2.536317
Alexa Echo Device	9094439556
Android	Google Play: 22.36.15 Google Home: 2.58.24.1
Google Home Hub	1.56.324896
iPhone	iOS 16.5
Apple Home Pod	16.5

Step 1: Getting Started (For Android & iOS Smart Phones: TCL Home App OR Smart Speakers)

- Method 1 – Smart Speaker Required: Open the Google or Apple app store on your smart phone and search for your smart speaker's companion app if not already downloaded (Amazon Alexa, Google Home, SmartThings, Apple Home).
- Method 2: Using the camera function on your smartphone, scan the QR code below or search TCL Home in Google or Apple app store and download the TCL Home App (it does not require the use of a smart speaker and has more features).

Note: The App only supports the 2.4 GHz WiFi band (all routers have a 2.4 GHz band). Please connect to the 2.4 GHz band before you begin the app setup process.

Step 2: Connect Your Air Conditioner to Matter

1. Ensure your smart phone and smart speaker are connected to your WiFi network. If you do not have a smart speaker, please use the TCL Home App you downloaded from the previous section.
2. Turn on Bluetooth on your mobile device.
3. Press "Display" or "Eco" 6 times on the remote controller OR press and hold "Mode" & "^" for 3s. The device will beep twice and show "CF" after a few seconds.





4. Open the Amazon Alexa, Google Home, SmartThings, Apple Home or TCL Home app on your mobile device.

5. Tap the "+" and "Add Device/A ccessory" or tap "+Add" in your app, select your Matter device, and scan the Matter QR code found on the side of the device. Then, follow the in-app instructions to complete setup.
   - If setting up without a smart speaker using the TCL Home App, please select the device titled "Matter Window AC". Once completed, you can control your device through the TCL Home App, Smart Assistant App, or Smart Speaker.



Introduction

For remote control model

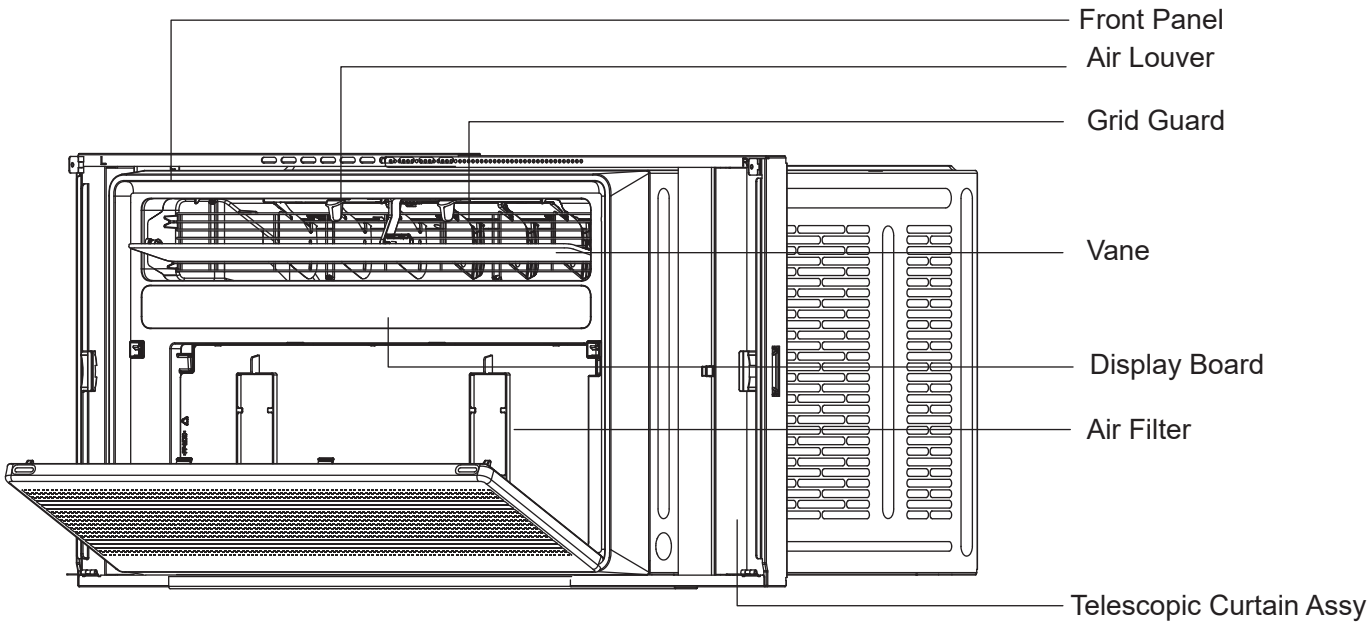

Control Panel



Remote Controller

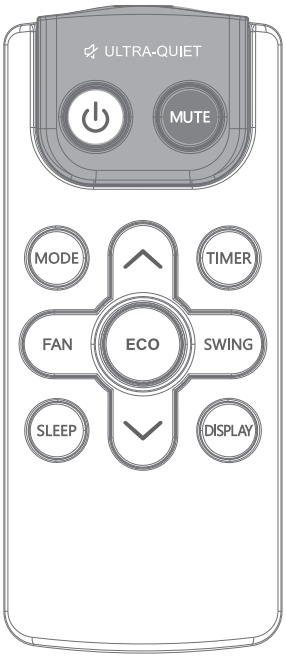

Attention

1) The design and some function of remote control may vary according to the model.
2) The shape and position of buttons and indicators may vary according to the model, but their function is the same.
3) The unit confirms the correct reception of each press button with a beep.

Operating Instructions

For remote control model

You can easily operate this air conditioner by pressing the relevant button on the control panel or remote.

TIMER	Timer on or Timer off the unit.
MUTE	Indicat es the unit is in MUTE mode
FAN	Adjust fan speed (Auto,Low, Med, High) NOTE: Fan speed setting is available in Auto,Cool, and Fan modes only.
	Increase the air conditioning temperature.
	Decrease the air conditioning temperature.
MODE	Switch between Cool/Dry/Fan/Auto mode.
SWING	Select to adjust the airflow direction by swinging the louver vertically. Long press 3 seconds to turn on/off Eco mode.
ON/OFF	Turn on the air conditioner or switch to standby.

Indication symbols of LED on control panel

AUTO LOW MED HIGH	Indicates Automatic, Low, Medium , and High fan speeds, respectively. NOTE:Fan speed setting is availble in Auto, Cool, and Fan modes only.
FILTER RESET(3S)	Long press 3 seconds to reset filter reminder
	Indicates that there is a WiFi connection.
	Indicates the unit is in MUTE mode.
	Indicates the unit is in Sleep mode.
COOL DRY FAN AUTO	Indicates Cool, Dry, Fan, Auto and mode, respectively.

Description:

1) Above LED lights on when the relevant mode is in used.

2) In Eco mode, when the desired temperature is reached, the compressor will turn off and the fan will continue to run for 3 minutes before turning off. The fan will turn on for 1-minute at every 5-minute interval until the room temperature is above the set temperature, at which time the compressor turns back on and continues cooling.

3) When the running time reaches 500 hours, the filter reminder will light up to indicate the filter needs to be cleaned. Press the Filter button to reset the filter reminder. Please see the maintenance section of this manual for filter cleaning instructions.

USING YOUR AIR CONDITIONER

Remote Control

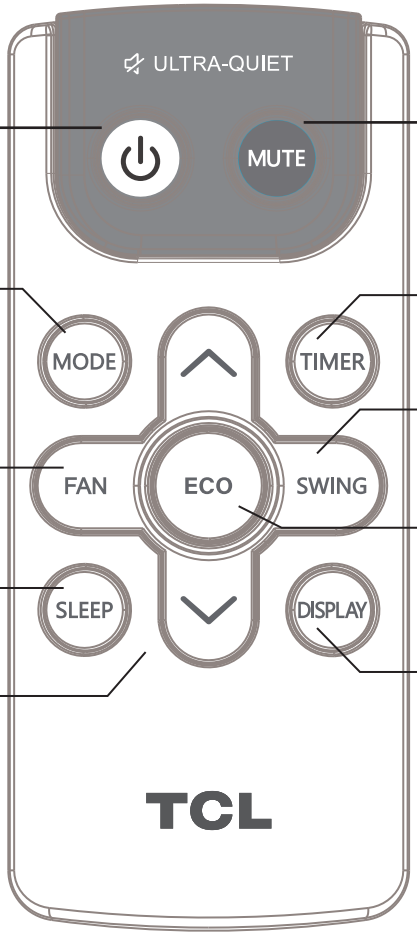

POWER
Turn the device on/off

MODE
Cycle through Cool, Dry, Fan, and Auto modes.

FAN SPEED
Adjust the fan speed (Low, Medium, High, Auto)
Press and hold f or 3s to switch between°F/°C.

SLEEP MODE
Designed to save energy while your sleep.

UP/DOWN
Increased or decrease the temperature/Timer.

MUTE
Select Mute to lower the operating volume to its quietest setting.

TIMER
Set a Timer to turn the air conditioner on/off.

SWING
Start and pause vent oscillation.

ECO MODE
Designed to save energy while keeping your room at the set temperature.

DISPLAY
Turn on/off the device's display.

For more information on how to use the remote and other functions of your air conditioning unit, or to understand how each mode works, please refer to the next few pages.

Battery Replacement

The air conditioner comes with two batteries for the included remote control. Please be sure to insert them correctly for proper use of the remote.

Note:

- Do not mix old and new batteries, or batteries of different types
- Do not leave batteries in the remote if you do not plan on using the device for more than 2 months
- Follow your local city ordinances for information on proper disposal of old and used batteries. Do not dispose of batteries in unsorted municipal waste.

Tips for Using the Remote

1. The remote must be used within 26ft of the unit
2. The unit will make a sound when it receives the remote's signal
3. Curtains, other materials, and even direct sunlight can interfere with the infrared signal receiver.
4. Press "MODE" and " ^ " and hold for 3s to reset the wifi setting.

Setup & Installation

Window Requirements

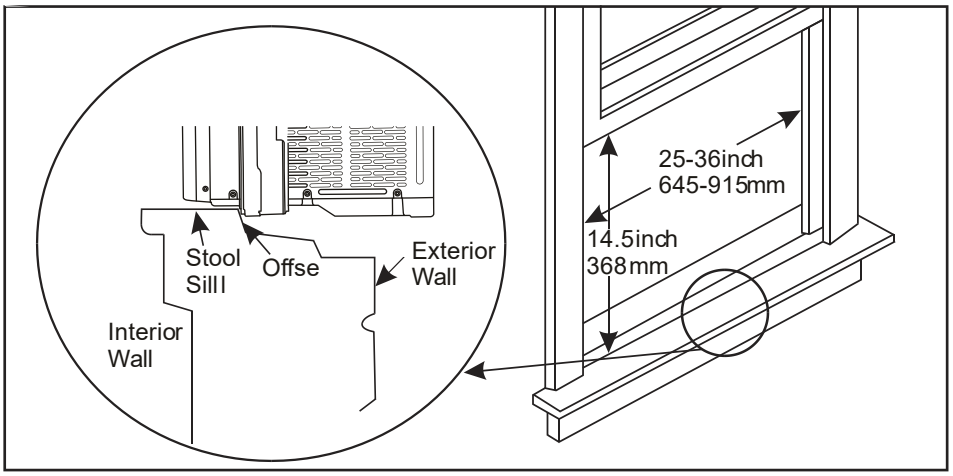

1. This air conditioner is designed to be installed in a standard single-hung or double-hung window with a window width between 25" and 36"(645mm - 915mm).
2. The air conditioner can be installed without the side panels to fit in a narrow window opening. See the window dimensions. If the air conditioner is installed on a window with a width of 645-720mm, the air conditioner must be installed to the right and the right bracket must be abut on the air conditioner, otherwise the air conditioner will not operate normally.
3. The lower sash (the lower part of the window that moves up and down) must allow for 14.5" of vertical clearance when open.
4. All supporting parts must be secured to firm wood, masonry or metal.
5. The electrical outlet must be within reach of the power cord.

NOTE:

1. Save the product packaging and installation instructions for future reference.
2. Store the air conditioner in the product box during winter or when not in use.

Gettng Started

SUGGESTED TOOLS FOR INSTALLATION(Not included)



Phillips screwdriver | Scissors or knife | Pencil | Level | Ruleror tapemeasure

CAUTION:

Heavy object. Team handling is required during the installation process.

1.Removing All the Packaging

Carefully remove all the packaging straps and wraps from the air conditioner and accessories.

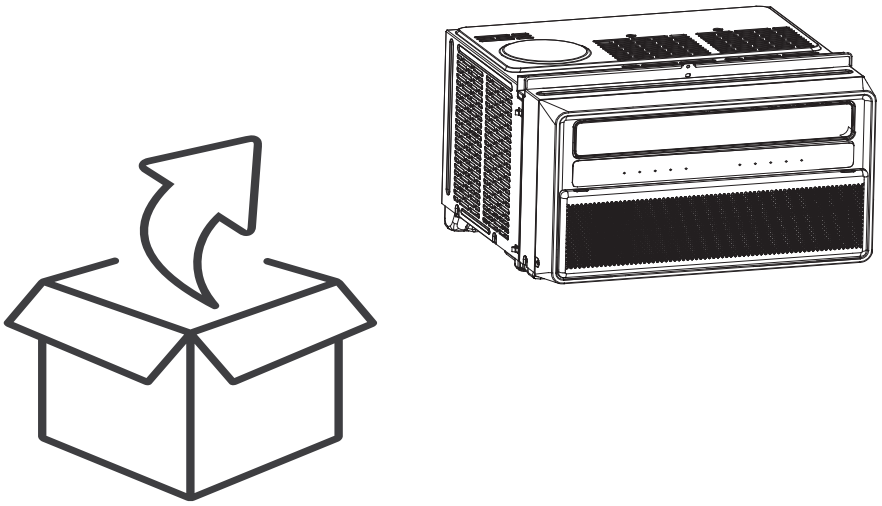

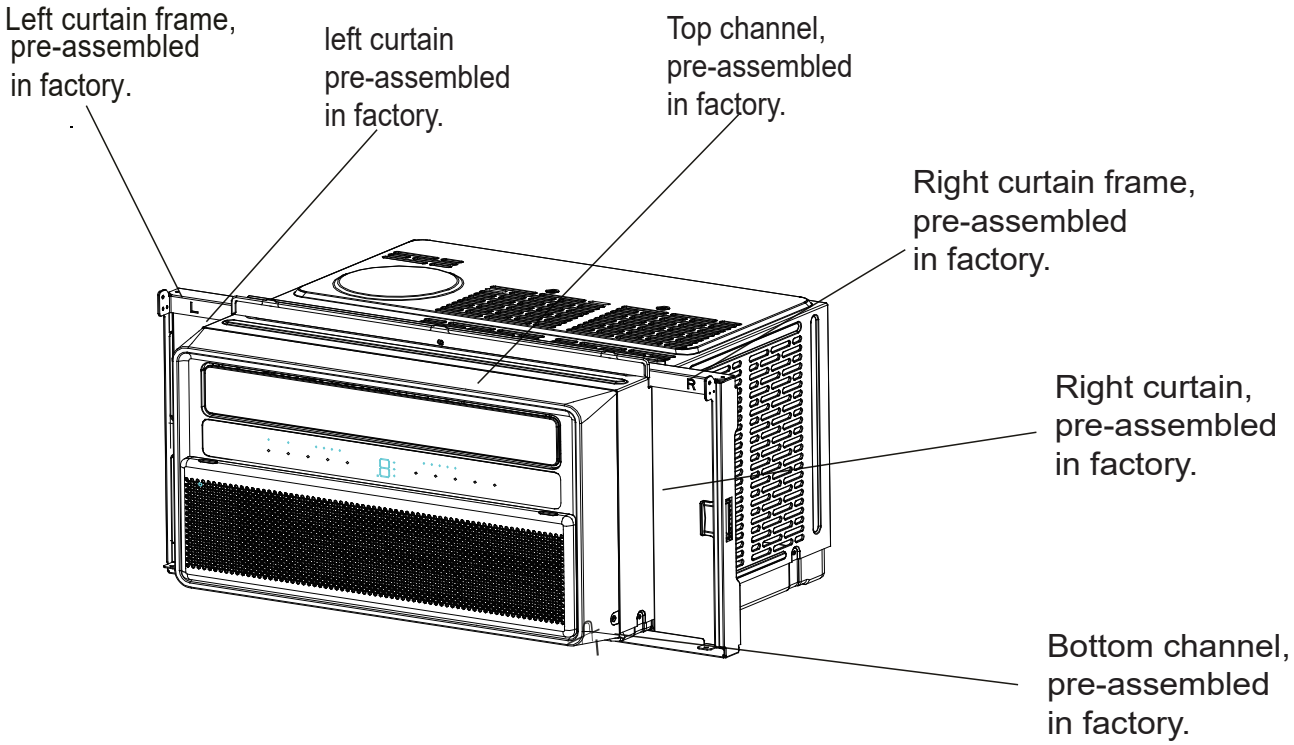

CAUTION:

When handling the unit, be careful to avoid cuts from the sharp metal edges and aluminum fins on the front and rear coils.

NOTE:

To be easy installation, both the left and right curtains, curtain frames, top channel, and bottom channel, are pre-assembled in factory.

2.Applying the Adhesive Foam Seal

Measure the length of the upper window frame, trim the adhesive foam seal to the appropriate length and apply as shown.

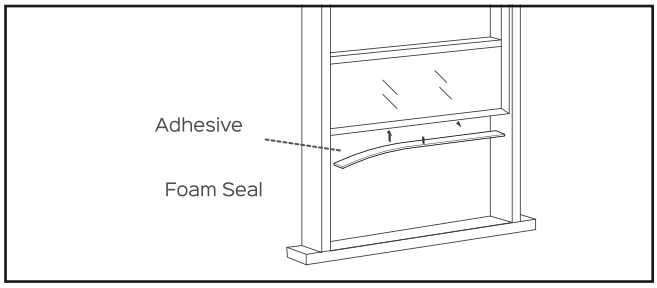

3.Placing Inside an Open Window

Carefully lift the air conditioner with a helper to the windowsill and pull down the sash, making sure the air conditioner is centered and its bottom rail is flush against the windowsill.

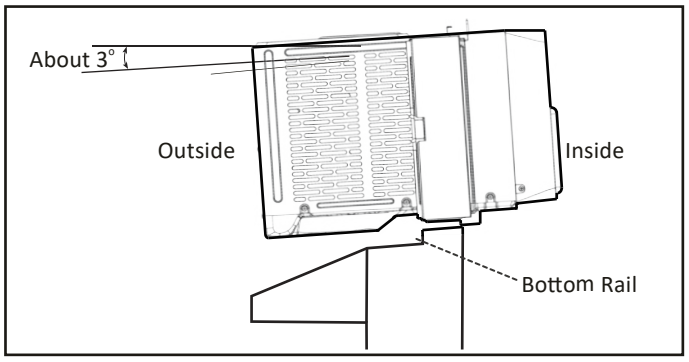

4.Securing the Side Brackets

Extend the side brackets from both sides of the air condiitoner onto the left and right window frames and secure by installing four 3 /4" screws as shown.

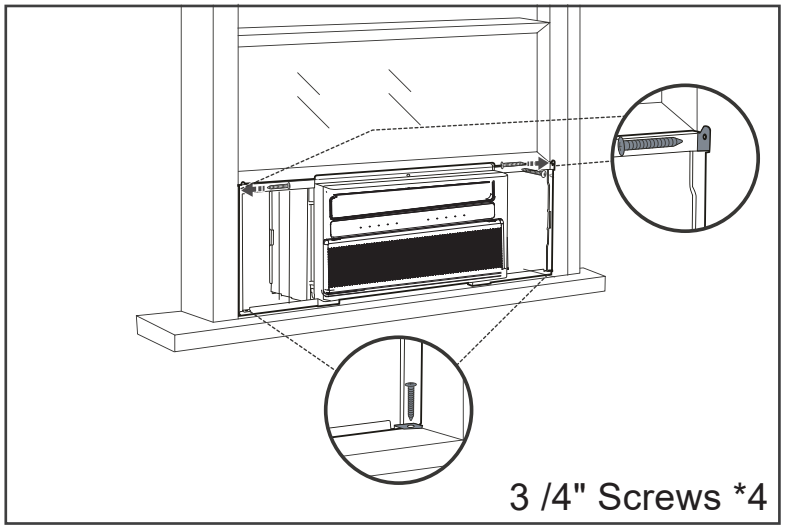

NOTE:

Fix the upper screws first, then the lower screws.

5.Securing the Side Panels

Pull the side panels inwards to align with the brackets, then secure onto the sides by snapping the juttng points onto the locking pins.

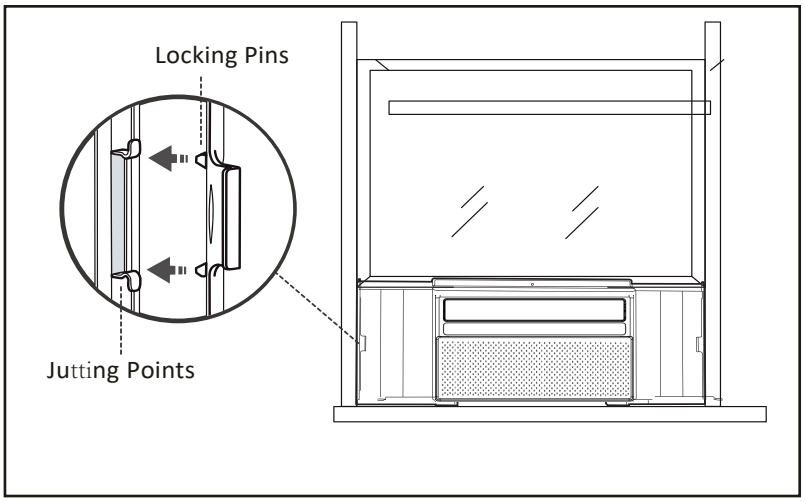

6.Sealing the Crevices with Plasticene (Optional)

Fill the crevices between the side brackets and panels with the included plasticene.

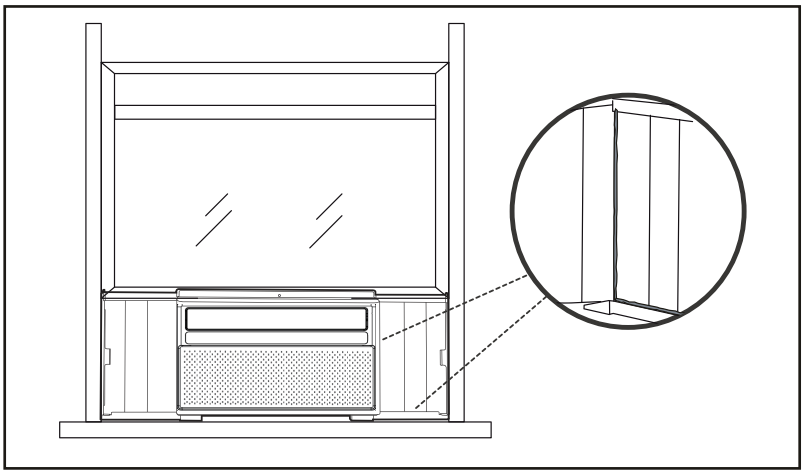

7.Installing the Screw Into the Top Rail

Install the 1 / 2" screw into the top rail of the air conditioner.

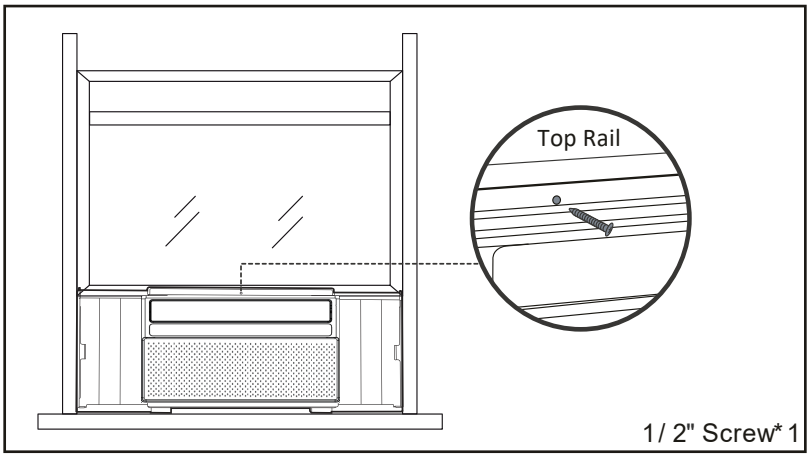

8.Applying the Panel Seals(optional)

Measure the length extended by the side panels, trim the panel seals to the appropriate length, peel off the backings and apply on the panels on both sides.

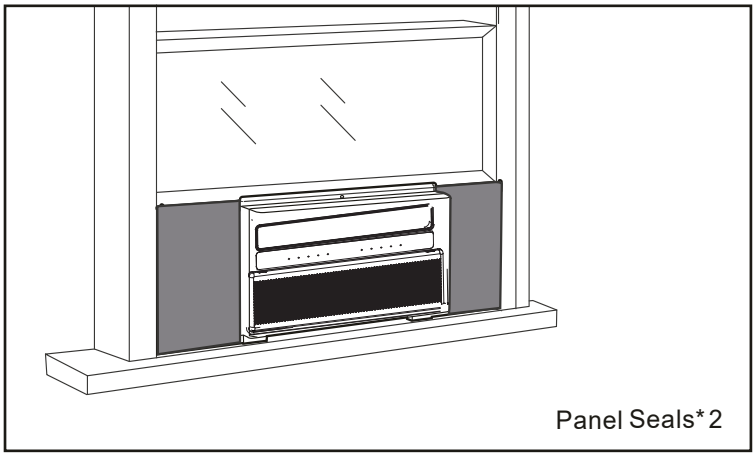

9.Installing the Security Bracket

Attach the security bracket on top of the window sash and secure with two 1 / 2" screws.

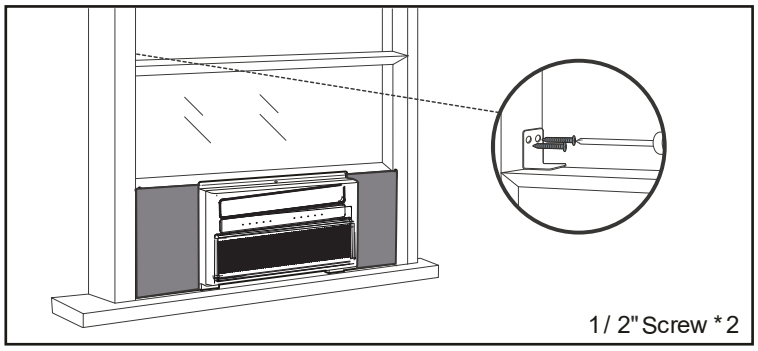

10.Filling the Gap Between Sashes

Trim the non-adhesive foam seal to the appropriate length and insert between the window sashes.

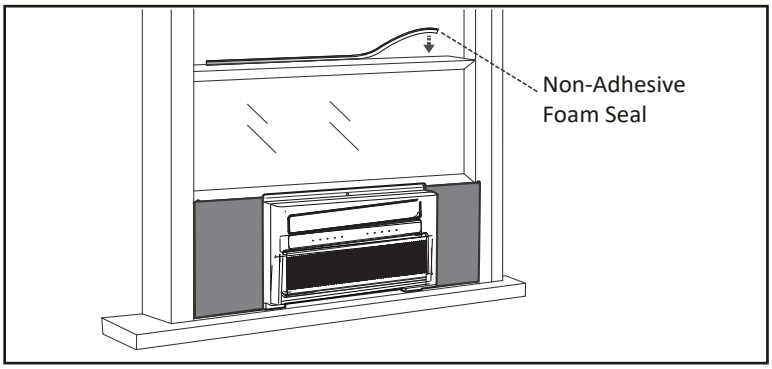

CAUTION:

When open the window, besure that the fixed screws are avaliable from the curtain to the window frame.

If AC is Blocked by Storm Window Frame

1. Add wood as shown above or remove store window frame/obstruction before installing the window air conditioner.
2. If the Storm Window Frame must remain, be sure the drain holes or slots are not caulked or painted shut.Accumulated rainwater or condensation must be allowed to drain out.

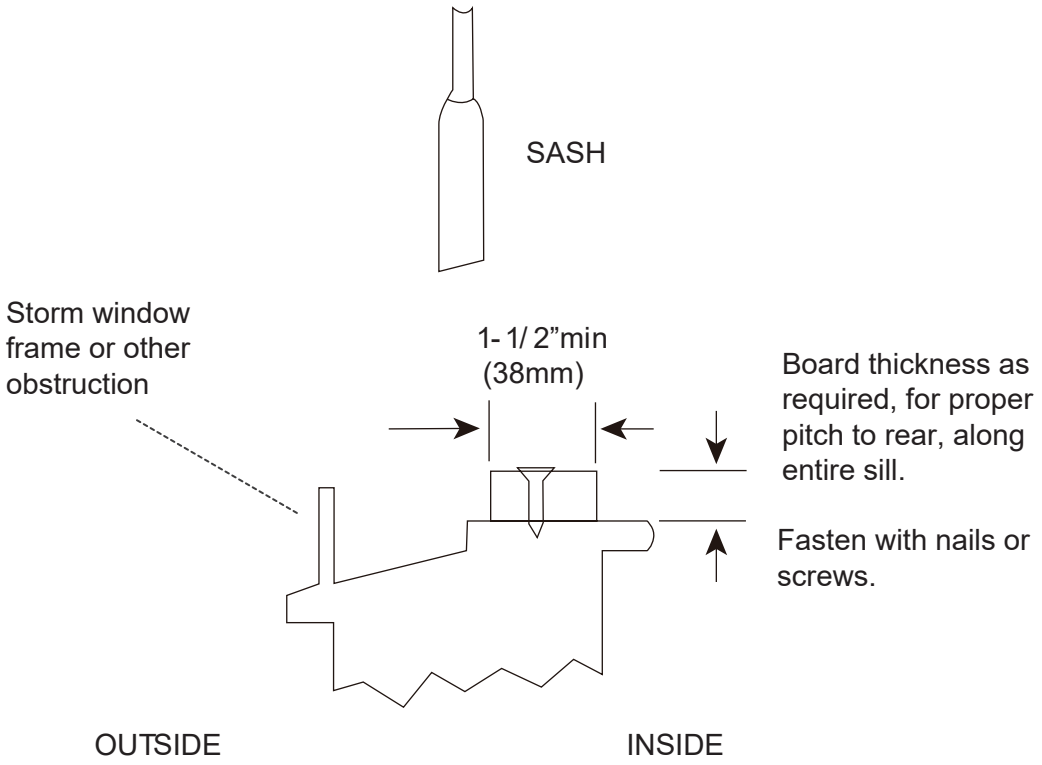

CAUTION

For some special window frame, as too thin or too thick, you may need to use the back-up lock frame to do the additional fixed.

If the AC unit can not be screw-fixed well by the steel frame holes, you must use the back-up lock frame to do the additional fixed, as the aluminum alloy window.

1. Install the screw into the top channel of the AC unit, and screw into the window frame.
2. Select two suitable back-up using lock frames, fix them at the bottom of steel frame near the sides with screws.
3. If needed, you can use the other two back-up using lock frames to do the additional fix at the top area.

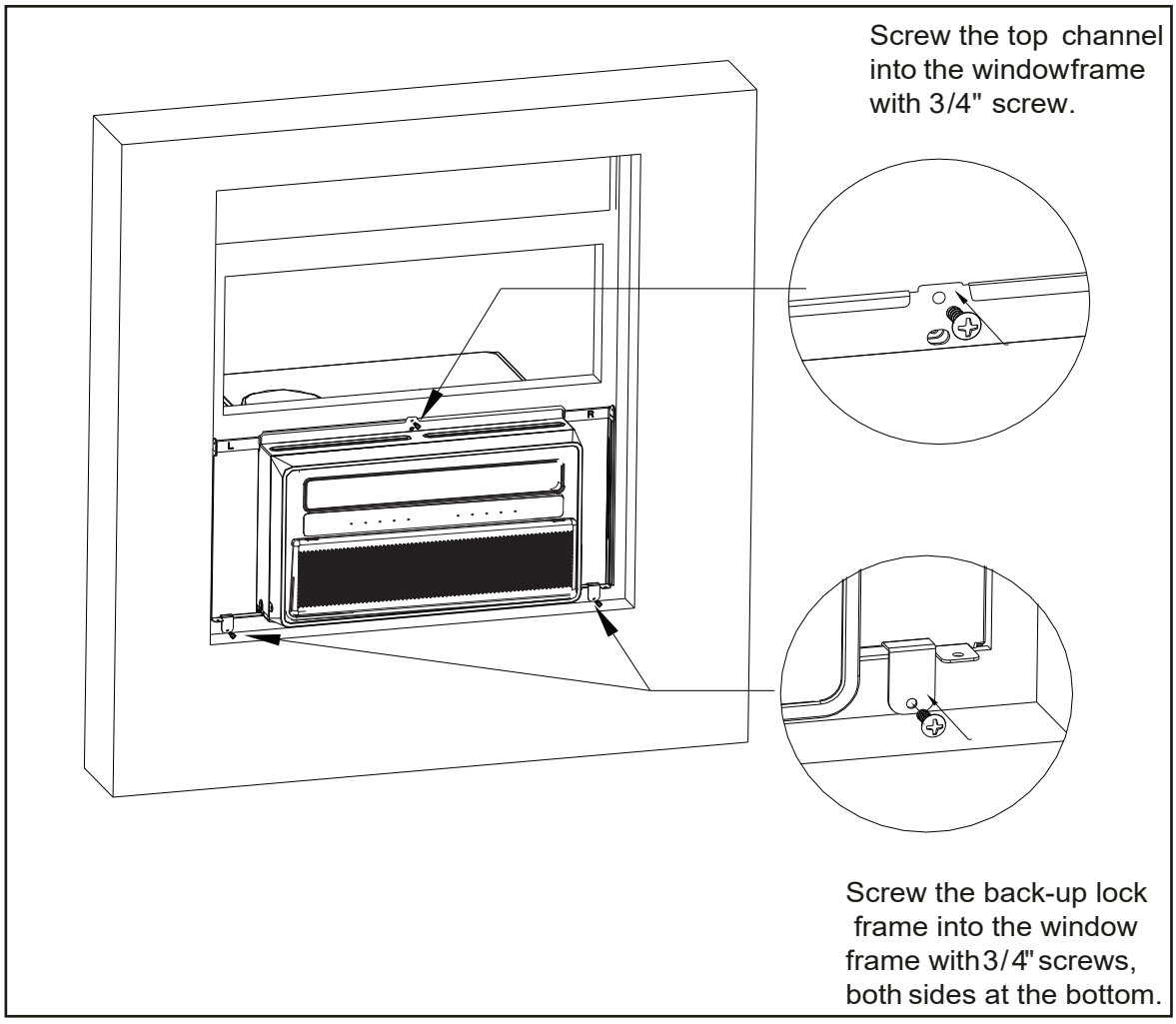

Other Features

Filter Reminder

When the running time reaches 500 hours, the filter reminder will light up to indicate the filter needs to be cleaned. Press and hold the Filter button for 5 seconds to reset the filter reminder. Please see the maintenance section of this manual for filter cleaning instructions.

Display Auto Off

- Display will dim after 30 seconds (or after 15 seconds in sleep mode)
- Wake up the display by pressing any button

Memory

If the air conditioner is turned off but stays connected to the power,it will resume the previous settings (except the timer setting) when it is turned on again.

Drain Water

This unit was designed to collect moisture from condensation in a collection pan in the base of the unit. The collected water is distributed by the rear fan on to the condenser coil. This aids in the overall efficiency of the unit.

It is normal to hear the water sloshing around when the fan is spinning.

If this behavior is not desired, the drain cap at the rear of the AC can be removed to drain a portion of the water.Doing so may lessen the efficiency of the AC.A minimal amount of water will still remain in the drain pan.

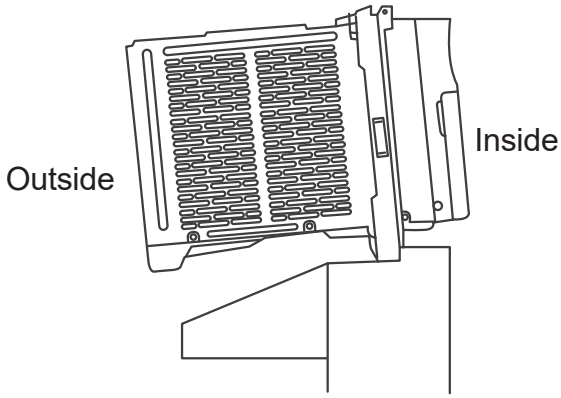

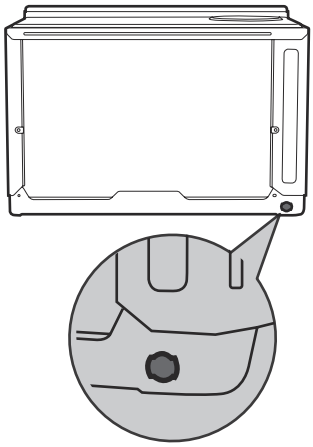

Maintenance

Care and Cleaning

Clean your air conditioner occasionally to keep it looking new. Before cleaning, be sure to unplug the unit from any and all power sources to prevent electric shock or fire hazards.

Air Filter

The air filter should be checked at least once every month to see if it needs cleaning. Never use hot water over 104°F (40°C) to clean the air filter. Never attempt to operate the unit without the air filter. Trapped particles and dust can build up over time, which can result in decreased airflow and can cause the coils to accumulate frost. To clean the air filter:

1. Pull the grille out from the indents on both sides at the front and remove the filter inside.
2. Wash the filter using liquid dish soap and warm water. Rinse the filter thoroughly. Gently shake the filter to remove excess water.
3. Let the filter dry completely before placing it into the air conditioner.

Note: If you do not wish to wash the filter, you may vacuum the filter to remove the dust and other particles.

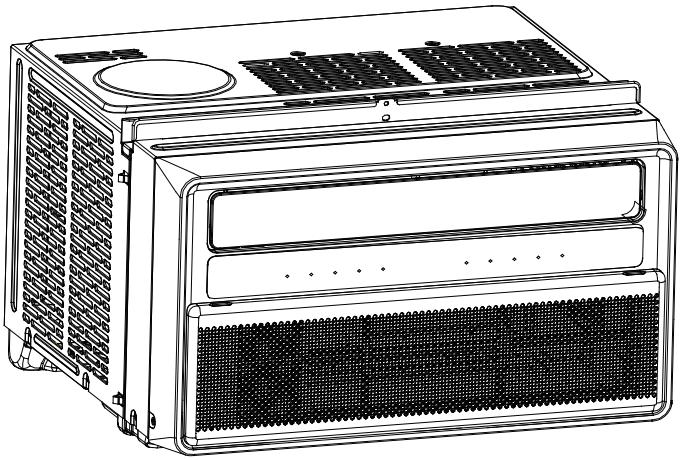

Cabinet Cleaning

To clean the air conditioner's cabinet:

• Using a cloth dampened in a solution of warm water and mild liquid soap, wipe down the unit and the front panel. Then, using a clean dampened cloth, make sure to wipe down the unit to remove all excess soap and continue to dry.

• Never use harsh cleaners, wax, or polish on the cabinet front.

• Be sure to wring out excess water from the cloth before wiping round the control. Excess water may damage the unit.

Storage

If you want to store the unit when not in use, we recommend removing the drain plug at the back of the unit and slightly tilting the unit towards the rear to drain any water in the pan in a safe manner. Next, clean the unit and then store it back in the original packaging or box until next use.

Warranty Information

All New TCL Product Models including LCD/LED Televisions, Sound Bars, and Appliances including Window Air Conditioners, Portable and Through-The-Wallir Air Conditioners, Dehumidifiers, Air Purifiers, and Robot Vacuums (each individually referred to as a "Product" or "Unit", and together referred to as the "Products").

What your warranty covers: Defects in materials or workmanship to the original owner of this TCL Product when purchased as new from an Authorized Dealer of TCL brand Products in the United States and packaged with this warranty statement.

New Products (Non-Commercial Use)

For how long after your purchase: One (1) year from date of purchase for parts and labor for non-commercial use.

New Products (Commercial Use)

For how long after your purchase: Six (6) months from date of purchase for parts and labor for commercial use.

Commercial use includes, but is not limited to, the use of this Product in a commercial or business environment, the use of this Product in an institution or for institutional purposes, or other commer cial purposes including rental purposes.

What we will do

At TCL's discretion, (1) pay an Authorized TCL Service Center for both labor charges and parts to repair your Product, or (2) replace your Product with a new or refurbished/remanufactured equivalent value Product. The decision to repair or replace will be made solely by TCL. See section entitled "How to get service."

How to get service

- Before submitting a request for warranty service, please visit support.tcl.com for helpful FAQs and additional troubleshooting suggestions.
- To get warranty service, contact TCL Customer Support by visiting support.tcl.com/contact-us. Please have your Product type, model number, serial number, and ZIP code ready. Troubleshooting and prior approval from a TCL representative MUST occur before sending in your Product to a TCL Service Center.
- A representative must troubleshoot your problem over the telephone,via chat, or through e-mail before receiving service. If it is determined that your Unit requires service, the service location will be at the sole discretion of TCL based upon the Limited Warranty Statement.
- At the sole discretion of TCL, television screen sizes 43-inches and smaller will either be repaired at an Authorized TCL Service Center or directly exchanged for a new or refurbished/ re-certified Unit. At thesole discretion of TCL, television screen sizes 44-inches or larger will either be repaired or directly exchanged for a new or refurbished/re-certified Unit at an

- At the sole discretion of TCL, television screen sizes 43-inches and smaller will either be repaired at an Authorized TCL Service Center or directly exchanged for a new or refurbished/ re-certified Unit. At thesole discretion of TCL, television screen sizes 44-inches or larger will either be repaired or directly exchanged for a new or refurbished/re-certified Unit at an Authorized TCL Service Center or in-home. At the sole discretion of TCL, Sound Bars, and Appliances including Window Air Conditioners, Portable and Through-The-Wall Air Conditioners, Dehumidifiers, Air Purifiers, and Robot Vacuums will either be repaired or directly exchanged for a new or refurbished/re-certified Unit at an Authorized TCL Service Center or in-home. In the event of a service visit where the on-site technician, in his-her sole discretion, deems the home or property conditions to be hazardous and/or unsafe, TCL reserves the right to cancel or re-schedule the service visit, or opt for an exchange of the in-warranty Unit for a refurbished/ recertified Unit in lieu of the in home service visit.
- TCL is not responsible for transportation costs for warranty coverage, including but not limited to Unit repair or replacement, to the Authorized TCL Service Center or TCL-designated address. However, TCL will pay for return shipping to a United States address only. TCL will provide instructions for packaging and shipping the Unit to the Authorized TCL Service Center or TCL-designated address. Units that are improperly packed and damaged during shipping are not covered under your limited Product warranty.
- Proof of purchase in the form of a bill of sale or receipted invoice from an Authorized Dealer which is evidence that the Product is within the warranty period must be presented to obtain warranty service.
- In the event that a Unit is to be replaced, a picture of the back of the Unit showing the model and serial number and picture of the Product issue itself may be required.
- PRE-AUTHORIZATION MUST BE OBTAINED BEFORE (1) SENDING ANY PRODUCT TO AN AUTHORIZED TCL SERVICE CENTER, OR (2) OBTAINING ANY IN-HOME REPAIR/ REPLACEMENT/RENTAL SERVICES.

What your warranty does not cover

- A Unit sold in “As-Is”, “Used”, “Factory Reconditioned”, “Factory Re-Certified”, or “Refurbished”, condition or with faults.
- Damage caused by transportation or handling, including damage during shipment from a Retailer (please contact your Retailer for assistance).
- Extended Service Plans purchased from Retailers. Please contact your Retailer for assistance.
- Customer instruction. (Your Owner’s Manual describes how to install, adjust, and operate your Unit. Any additional information should be obtained from your Authorized Dealer).
- Service calls to your home for delivery or pick-up, installation, instruction, replacement of house fuses, connection of house wiring or plumbing, or to correct unauthorized repairs.
- Installation and related adjustments, or damage resulting from installation.
- Damage resulting from non-approved installation or repair methods.
- Failure of the Product to perform due to signal reception problems not caused by your Unit, or due to power failures or interruptions, or inadequate electrical service.
- Damage from misuse, abuse, neglect, insects, normal wear and tear, cosmetic damage, mishandling, faulty installation, inadequate electrical wiring, or power line surges.
  Damage caused by operating the Product in a corrosive or wet atmosphere.
- Markings or images on the television’s panel resulting from viewing fixed images (including but not limited to certain 4:3 images on wide screen televisions, or data or images in fixed screen locations from banners, video games, or certain broadcast networks).
- Units that have original factory serial numbers that are unreadable or missing, or that have been
- changed, defaced, or altered in any manner.
  Batteries.
- A television that has been modified or incorporated into other Products, or that has had the serial number removed or altered.
- Use of accessories or components that are not compatible with this Product.
- A Unit purchased or serviced outside of the United States.

- Costs of shipping the Unit to the Authorized TCL Service Center or TCL-designated address. TCL will pay for return shipping to the customer to a United States address only.
- Acts of nature or God (as illustrative examples and for the avoidance of doubt, such acts of nature or God include but are not limited to damage caused by earthquakes, fires, lightning, or flood whether caused by nature or humans).
- Special, incidental, or consequential damages.

LIMITATION OF WARRANTY

- THE WARRANTY STATED ABOVE IS THE ONLY WARRANTY APPLICABLE TO THIS PRODUCT. NO VERBAL OR
- WRITTEN INFORMATION GIVEN BY TTE TECHNOLOGY, INC. DBA TCL NORTH AMERICA, ITS AGENTS OR EMPLOYEES SHALL CREATE A GUARANTY OR IN ANY WAY INCREASE OR MODIFY THE SCOPE OF THIS WARRANTY.
- REPAIR OR REPLACEMENT AS PROVIDED UNDER THIS WARRANTY IS THE EXCLUSIVE REMEDY OF THE CONSUMER. TTE TECHNOLOGY, INC. DBA TCL NORTH AMERICA SHALL NOT BE LIABLE FOR SPECIAL, INCIDENTAL, OR CONSEQUENTIAL DAMAGES RESULTING FROM THE USE OF THIS PRODUCT OR ARISING OUT OF ANY BREACH OF ANY EXPRESS OR IMPLIED WARRANTY ON THIS PRODUCT. THIS DISCLAIMER OF WARRANTIES AND LIMITED WARRANTY ARE GOVERNED BY THE LAWS OF THE STATE OF CALIFORNIA. EXCEPT TO THE EXTENT PROHIBITED BY APPLICABLE LAW, ANY IMPLIED WARRANTY OF MERCHANTABILITY OR FITNESS FOR A PARTICULAR PURPOSE ON THIS PRODUCT IS LIMITED TO THE APPLICABLE WARRANTY AND WARRANTY PERIOD SET FORTH ABOVE. THIS WARRANTY IS SUBJECT TO CHANGE WITHOUT NOTICE. PLEASE VISIT WWW.TCL.COM TO VIEW THE MOST CURRENT VERSION.

How State Law relates to this warranty

- Some states may not allow the exclusion or limitation of incidental or consequential damages, or limitations on how long an implied warranty lasts, so the above limitations or exclusions may not apply to you.
- This warranty gives you specific legal rights, and you also may have other rights that vary from state to state.

If you purchased your Unit outside of the United States or seek warranty service coverage outside of the United States, this warranty does not apply. Contact your dealer for warranty information. Service calls which do not involve defective materials or workmanship are not covered by this limited warranty. Costs of such service calls are the sole responsibility of the purchaser.

Trouble shooting

PROBLEM	POSSIBLE CAUSES	SOLUTIONS
The air conditioner will not start	The air conditioner is unplugged	Make sure the air conditioner plug is pushed completely into the outlet.
	The fuse is blown/circuit breaker is tripped	Check the house fuse/circuit breaker box and replace the fuse or reset the breaker.
	Power failure	• The unit will automatically restart when power is restored. • There is a protective time delay (approx. 3 minutes) to prevent tripping and overloading the compressor. For this reason, the unit may not start normal cooling for 3 minutes after it is turned back on.
	The current interrupter device is tripped	• Press the RESET button located on the power cord plug. • If the RESET button will not stay engaged, discontinue use of the airconditioner and contact a qualified service technician.
The air conditioner does not cool as it should	Air flow is restricted	Make sure there are no curtains, blinds or furniture blocking the front of the air conditioner.
	The temperature control may not be set correctly.	Lower the set thermostat temperature.
	The air filter is dirty	Clean the filter. Refer to MAINTENANCE.
	The room may be too warm	Please allow time for the room to cool down after turning on the air conditioner.
	Cold air is escaping	Check for open furnace registers and cold air returns.
	The cooling coils are frozen	Switch to high fan speed and set the thermostat to a higher temperature.
	Temperature sensor is not well situated.	Temperature sensor behind the air filter is touching the coil. Try to move it so it does not contact the cold coil.

The air conditioner is freezing up	Ice blocks the air flow and stops the air conditioner from cooling the room	Switch to high fan speed and set the thermostat to a higher temperature.
The remote control is not working	The batteries are inserted incorrectly	Check the position of the batteries.
	The batteries may be dead	Replace the batteries.
Water is dripping outside	Hot and humid weather	This is normal.
Water is dripping INSIDE when the unit is cooling	The air conditioner is not correctly tilted outside	Improper installation. Tilt air conditioner slightly to the outside to allow water drainage. Refer to installation instructions.
Water is dripping INSIDE when the unit is cooling	Moisture removed from the air is draining into the base pan	This is normal for a short period in areas with low humidity and normal for a longer period in areas with high humidity
Noise when the unit starts	A "da-da" sound may occur for 30 seconds when the unit is turned on due to the compressor starting.	This is normal.

TCL

Need more help? / ¿Necesitas más ayuda? / Besoin d'aide ?

support.tcl.com

1-800-825-6747

TCL and the TCL Logo are owned by TCL Corporation
and under license to TTE Technology, Inc.