SONY

VAIO® System Reference Manual

PCV-RX450/PCV-RX460



Notice to Users

© 2001 Sony Electronics Inc. Reproduction in whole or in part without written permission is prohibited. All rights reserved. This manual and the software described herein, in whole or in part, may not be reproduced, translated, or reduced to any machine-readable form without prior written approval.

SONY ELECTRONICS INC. PROVIDES NO WARRANTY WITH REGARD TO THIS MANUAL, THE SOFTWARE, OR OTHER INFORMATION CONTAINED HEREIN AND HEREBY EXPRESSLY DISCLAIMS ANY IMPLIED WARRANTIES OF MERCHANTABILITY OR FITNESS FOR ANY PARTICULAR PURPOSE WITH REGARD TO THIS MANUAL, THE SOFTWARE, OR SUCH OTHER INFORMATION. IN NO EVENT SHALL SONY ELECTRONICS INC. BE LIABLE FOR ANY INCIDENTAL, CONSEQUENTIAL, OR SPECIAL DAMAGES, WHETHER BASED ON TORT, CONTRACT, OR OTHERWISE, ARISING OUT OF OR IN CONNECTION WITH THIS MANUAL, THE SOFTWARE, OR OTHER INFORMATION CONTAINED HEREIN OR THE USE THEREOF.

Sony Electronics Inc. reserves the right to make any modification to this manual or the information contained herein at any time without notice. The software described herein is governed by the terms of a separate user license agreement.

This product contains software owned by Sony and licensed by third parties. Use of such software is subject to the terms and conditions of license agreements enclosed with this product. Some of the software may not be transported or used outside the United States. Software specifications are subject to change without notice and may not necessarily be identical to current retail versions.

Updates and additions to software may require an additional charge. Subscriptions to online service providers may require a fee and credit card information. Financial services may require prior arrangements with participating financial institutions.

Sony, VAIO, the VAIO logo, and i.LINK are trademarks of Sony. Intel, and Pentium are trademarks of Intel Corporation. Microsoft, Windows, and the Windows Me logo are registered trademarks of Microsoft Corporation. PS/2 is a registered trademark of IBM Corporation.

All other trademarks are trademarks or registered trademarks of their respective owners.

Owner's Record

The model number and serial number are located on the back of your VAIO® computer. Record the serial number in the space provided here. Refer to the model and serial number when you call your Sony Service Center.

Model Number: PCV-RX450/PCV-RX460

Serial Number:_____

Safety Information and Caution

DVD Laser Diode Properties

Laser Output	0.4 mW(DVD) 0.14 mW (CD)
Wave Length	650-655 nm (DVD) 785 nm (CD)

CD-RW Laser Diode Properties

Laser Output	1.0 mW(Read) 43.5 mW (Write)
Wave Length	780-787 nm

- To prevent fire or shock hazard, do not expose your desktop to rain or moisture.To avoid electrical shock, do not open the cabinet. Refer servicing to qualified personnel only.
- Never install modem or telephone wiring during a lightning storm.
- Never install telephone jacks in wet locations unless the jack is specifically designed for wet locations.
- Never touch uninsulated telephone wire or terminals unless the telephone line has been disconnected at the network interface.
- Use caution when installing or modifying telephone lines.
- Avoid using the modem during an electrical storm.
- Do not use the modem or a telephone to report a gas leak in the vicinity of the leak.
- The socket outlet shall be installed near the equipment and shall be easily accessible.

! To change the backup battery, contact your nearest Sony Service Center.

! Caution - The use of optical instruments with this product will increase eye hazard. As the laser beam used in this product is harmful to the eyes, do not attempt to disassemble the drive cabinet. Refer servicing to qualified personnel only.

! Danger - Visible and invisible laser radiation when open. Avoid direct exposure to beam.

! For CD-RW: Danger - Invisible laser radiation when open. Avoid direct exposure to beam.

! Caution - For ADSL, HomePNA, and V.90 modem models; to reduce the risk of fire, use only No. 26 AWG or larger telecommunication line cord.

- Pour prévenir tout risque d'incendie ou d'électrocution, garder cet appareil à l'abri de la pluie et de l'humidité.
- Pour prévenir tout risque d'électrocution, ne pas ouvrir le châssis de cet appareil et ne confier son entretien qu'à une personne qualifiée.
- Ne jamais effectuer l'installation de fil modem ou téléphone durant un orage électrique.
- Ne jamais effectuer l'installation d'une prise téléphonique dans un endroit mouillé à moins que la prise soit conçue à cet effet.
- Ne jamais toucher un fil téléphonique à découvert ou un terminal à moins que la ligne téléphonique n'ait été débranché de l'interface réseau.
- Soyez très prudent lorsque vous installez ou modifiez les lignes téléphoniques.
- Évitez d'utiliser le modem durant un orage électrique.
- N'utilisez pas le modem ni le téléphone pour prévenir d'une fuite de gaz vous êtes près de la fuite.
- L'appareil doit être le plus près possible d'une prise murale pour en faciliter l'accès.

! Pour changer la pile de rechange, veuillez contacter votre centre de service Sony le plus près.

! Avertissement - L'utilisation d'instruments optiques avec ce produit augmente les risques pour les yeux. Puisque le faisceau laser utilisé dans ce produit est dommageable pour les yeux, ne tentez pas de désassembler le boîtier. Adressez-vous à un agent de service qualifié.

! Danger - Radiation laser visible et invisible si ouvert. Évitez l'exposition directe au faisceau.

! Pour les CD-RW : Danger - Radiation laser visible et invisible si ouvert. Évitez l'exposition directe au faisceau.

! Attention - Pour ADSL, HomePNA, et V.90 modele modem; afin de réduire les risques d'incendie, n'utilisez qu'un cordon de communication N0. 26 AWG ou plus gros.

For questions regarding your product or for the Sony Service Center nearest you, call 1-888-476-6972 in the United States or 1-800-961-7669 in Canada.

Sony Customer Support can be reached at http://www.sony.com/pcsupport.

Regulatory Information

Declaration of Conformity

Trade Name:	SONY
Model No.:	PCV-RX450/PCV-RX460
Responsible Party:	Sony Electronics Inc.
Address:	680 Kinderkamack Rd Oradell, NJ 07649
Telephone:	201-930-6970

This phone number is for FCC-related matters only.

This device complies with Part 15 of FCC Rules. Operation is subject to the two following conditions:

(1) This device may not cause harmful interference, and

(2) this device must accept any interference received, including interference that may cause undesired operation.

This equipment has been tested and found to comply with the limits for a Class B digital device, pursuant to Part 15 of the Rules. These limits are designed to provide reasonable protection against harmful interference in a residential installation. This equipment generates, uses, and can radiate radio frequency energy and, if not installed and used in accordance with the instructions, may cause harmful interference to radio communications. However, there is no guarantee that interference will not occur in a particular installation. If this equipment does cause harmful interference to radio or television reception, which can be determined by turning the equipment off and on, the user is encouraged to try to correct the interference by one or more of the following measures:

- Reorient or relocate the receiving antenna.
- Increase the separation between the equipment and the receiver.
- Connect the equipment into an outlet on a circuit different from that to which the receiver is connected.
- Consult the dealer or an experienced radio/TV technician for help.

You are cautioned that any changes or modifications not expressly approved in this manual could void your authority to operate this equipment.

Only peripherals (such as computer input/output devices, terminals, and printers) that comply with FCC Class B limits may be attached to this computer product. Operation with noncompliant peripherals is likely to result in interference to radio and television reception.

All cables used to connect peripherals must be shielded and grounded. Operation with cables, connected to peripherals, that are not shielded and grounded, may result in interference to radio and television reception.

FCC Part 68

This equipment complies with Part 68 of the FCC rules. The FCC Ringer Equivalence Number (REN) for this equipment is 0.79B. If requested, this information must be provided to the telephone company.

This modem uses the USOC RJ-11 telephone jack.

The REN is used to determine the quantity of devices which may be connected to the telephone line. Excessive RENs on the telephone line may result in the devices not ringing in response to an incoming call. In most, but not all areas, the sum of the RENs should not exceed five (5.0). To be certain of the number of devices that may be connected to the line, as determined by the total RENs, contact the telephone company to determine the maximum REN for the calling area.

If the terminal equipment causes harm to the telephone network, the telephone company will notify you in advance that temporary discontinuance of service may be required. But if advance notice is not practical, the telephone company will notify the customer as soon as possible. Also, you will be advised of your right to file a complaint with the FCC if you believe it is necessary.

The telephone company may make changes in its facilities, equipment, operations or procedures that could affect the operations of the equipment. If this happens, the telephone company will provide advance notice in order for you to make the necessary modifications in order to maintain uninterrupted service.

If trouble is experienced with this modem, for repair or warranty information, please contact 1-888-4SONY-PC, or write to the Sony Customer Information Center, 12451 Gateway Blvd., Fort Myers, FL 33913. If the trouble is causing harm to the telephone network, the telephone company may request that you remove the equipment from the network until the problem is resolved.

Repair of this equipment should be made only by a Sony Service Center or Sony authorized agent. For the Sony Service Center nearest you, call 1-888-4SONY-PC (1-888-476-6972).

This equipment cannot be used on public coin service provided by the telephone company. Connection to Party Line Service is subject to state and possible provincial tariffs. (Contact the state or provincial utility service commission, public service commission, or corporation commission for information.)

Telephone Consumer Protection Act of 1991 (United States)

The Telephone Consumer Protection Act of 1991 makes it unlawful for any person to use a computer or other electronic device to send any message via a telephone facsimile machine unless such message clearly contains, in a margin at the top or bottom of each transmitted page or on the first page of the transmission, the date and time it is sent and an identification of the business, other entity, or individual sending the message, and the telephone number of the sending machine or such business, other entity, or individual.

In order to program this information into your facsimile, see your fax software documentation.

Telephone Consumer Guidelines (Canada)

Please refer to your telephone directory under 'Privacy Issues' and/or 'Terms of Service.' For more detailed information, please contact:

CRTC
Terrasses de la Chaudiére, Tour centrale
1 promenade du Portage, 5 étage Hull PQ K1A 0N2.

This Class B digital apparatus complies with Canadian ICES-003.

Cet àppareil numérique de la classe B est conforme à la norme NMB-003 du Canada.

Disposal of Lithium Battery

You can return your unwanted lithium batteries to your nearest Sony Service Center or Factory Service Center.

✍ In some areas the disposal of lithium batteries in household or business trash may be prohibited.

For the Sony Service Center nearest you, call 1-888-476-6972 in the United States or 1-800-961-7669 in Canada.

! Do not handle damaged or leaking lithium batteries.

! Ne pas manipuler les batteries au lithium qui fuient ou sont endommagées.

! Danger of explosion if battery is incorrectly replaced. Replace only with the same or equivalent type recommended by the manufacturer. Discard used batteries according to the manufacturer's instructions.

! Une batterie non conforme présente un danger d'explosion. La remplacer seulement par une batterie identique ou de type équivalent recommandé par le fabricant. Évacuer les batteries usées selon les directives du fabricant.

! The battery pack used in this device may present a fire or chemical burn hazard if mistreated. Do not disassemble, heat above 212°F (100°C) or incinerate.
Dispose of used battery promptly.
Keep away from children.

! La manutention incorrecte du module de batterie de cet appareil présente un risque d'incendie ou de brûlures chimiques. Ne pas démonter, incinérer ou exposer à une température de plus de 100°C. Évacuer promptement la batterie usée. Garder hors de portée des enfants.

Industry Canada Notice

NOTICE: The Industry Canada label identifies certified equipment. This certification means that the equipment meets certain telecommunications network protective, operational and safety requirements as prescribed in the appropriate Terminal Equipment Technical Requirements document(s). The Department does not guarantee the equipment will operate to the user's satisfaction.

Before installing this equipment, users should ensure that it is permissible to be connected to the facilities of the local telecommunications company. The equipment must also be installed using an acceptable method of connection.

The customer should be aware that compliance with the above conditions may not prevent degradation of service in some situations.

Repairs to certified equipment should be coordinated by a representative designated by the supplier. Equipment malfunctions or any repairs or alterations made by the user to this equipment may give the telecommunications company cause to request that the user disconnect the equipment.

Users should ensure for their own protection that the electrical ground connections of the power utility, telephone lines and internal metallic water pipe system, if present, are connected together. This precaution may be particularly important in rural areas.

CAUTION: Users should not attempt to make such connections themselves, but should contact the appropriate electrical inspection authority, or electrician, as appropriate.

NOTICE: The Ringer Equivalence Number (REN) assigned to each terminal device provides an indication of the maximum number of terminals allowed to be connected to a telephone interface. The termination on an interface may consist of any combination of devices subject only to the requirement that the sum of the Ringer Equivalence Numbers of all the devices does not exceed 5. The Ringer Equivalence Number for this equipment is 0.79B.

Avis de L'industrie Canada

AVIS: L'étiquette d'Industrie Canada identifie le matériel homologué.

Cette étiquette certifie que le matériel est conforme aux normes de protection, d'exploitation et de sécurité des réseaux de télécommunications, comme le prescrivent les documents concernant les exigences techniques relatives au matériel terminal. Le Ministère n'assure toutefois pas que le matériel fonctionnera à la satisfaction de l'utilisateur.

Avant d'installer ce matériel, l'utilisateur doit s'assurer qu'il est permis de le raccorder aux installations de l'entreprise locale de télécommunication. Le matériel doit également être installé en suivant une méthode acceptée de raccordement. L'abonné ne doit pas oublier qu'il est possible que la conformité aux conditions énoncées ci-dessus n'empêche pas la dégradation du service dans certaines situations.

Les réparations de matériel homologué doivent être coordonnées par un représentant désigné par le fournisseur. L'entreprise de télécommunications peut demander à l'utilisateur de débrancher un appareil à la suite de réparations ou de modifications effectuées par l'utilisateur ou à cause de mauvais fonctionnement.

Pour sa propre protection, l'utilisateur doit s'assurer que tous les fils de mise à la terre de la source d'énergie électrique, des lignes téléphoniques et des canalisations d'eau métalliques, s'il y en a, sont raccordés

ensemble. Cette précaution est particulièrement importante dans les régions rurales.

Avertissement: L'utilisateur ne doit pas tenter de faire ces raccordements lui-même; il doit avoir recours à un service d'inspection des installations électriques, ou à un électricien, selon le cas.

AVIS: L'indice d'équivalence de la sonnerie (IES) assigné à chaque dispositif terminal indique le nombre maximal de terminaux qui peuvent être raccordés à une interface.

La terminaison d'une interface téléphonique peut consister en une combination de quelques dispositifs, à la seule condition que la somme d'indices d'équivalence de la sonnerie de tous les dispositifs n'excède pas 5. L'indice d'équivalence de la sonnerie de ce matériel est de 0.79B.

Contents

Notice to Users ii
Owner's Record ii
Safety Information and Caution iii
Regulatory Information v
FCC Part 68 vi
Telephone Consumer Protection Act of 1991 (United States) vi
Telephone Consumer Guidelines (Canada) vii
Disposal Of Lithium Battery vii
Industry Canada Notice viii
Avis de L'industrie Canada viii

Chapter 1 — Identifying Components 1
Front View 2
Drives 3
Buttons and Switches 5
Indicators 6
Connectors 7
Rear View 8
Icons 9
I/O Connectors 11
Expansion Slots 15

Chapter 2 — Configuring Your System 17
Accessing the BIOS Setup Utility 18
Changing the Display's Power Management Settings 19

Chapter 3 — Removing, Installing, and Replacing Components 23

Removing the Side Cover 24
Replacing the Side Cover 25
Installing a PCI Add-In Card 26
Removing a PCI Add-in Card 27
Installing an Add-On AGP Card 29
Replacing the Lithium Battery 31
Installing System Memory 34
Removing a Memory Module 37
Removing a Slot Cover 39
Covering an Open I/O Slot 40
Installing a 3.5-inch Internal Hard Disk Drive 41
Removing the Power Supply 45
Replacing the Power Supply 46

Chapter 4 — System Board 47

Connectors and Headers 48
Front Panel Header 48
Floppy Disk Drive Header 49
Memory Module (DIMM) Slots 50
PCI Slots 51
AGP Slot 52
IDE Headers 53
Keyboard and Mouse Ports 54
USB Ports, USB Header, and Ethernet Port 55
Printer, Monitor, and i.LINK Connectors 57
i.LINK Header 60
Serial Port, Headphones, Line In, and Mic Connectors 61
Power Supply Header 63
Fan Headers 64
CD-In Header 65
Wake On LAN (WOL-CON) Header 66
AUX Audio Header 67
Configuration Jumper (CMOS CLR) 68

Chapter 5 — Fax/Modem Card 69
HomePNA Modem 70
Connectors 70
Lucent 1648 Modem 71
Connectors 71

Chapter 6 — CMOS Setup Options 73
Main Screen 75
Advanced Screen 77
Power Screen 78
Boot Screen 79
Exit Screen 80

Chapter 7 — Miscellaneous Technical Information 81
About User and Supervisor Passwords 82
Beep Code Error Messages 83
PCI Configuration Status and Error Messages 84
DMA Channel Assignments 85
System I/O Address Map 86
Memory Map 88
IRQ Settings 89

Chapter 8 — Specifications 91
Processor 91
Chipset 91
PCI Bus 91
AGP Bus 91
DIMM Configurations 92
Memory Modules (DIMMs) 92
L2 Cache 92
Graphics 92
Audio 93
Communications 93
I/O and Expansion Slots 93

Floppy Disk Drive and Controller 94
Hard Drives and Controllers 94
Optical Drives 95
System BIOS 96

Index 97

Chapter 1
Identifying Components

The following sections identify and describe each component that is visible from the exterior of the VAIO® computer. Internal components are identified in the appropriate section of this manual.

Front View

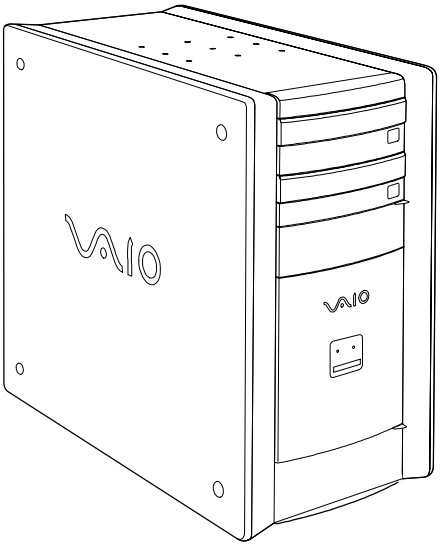

Drives

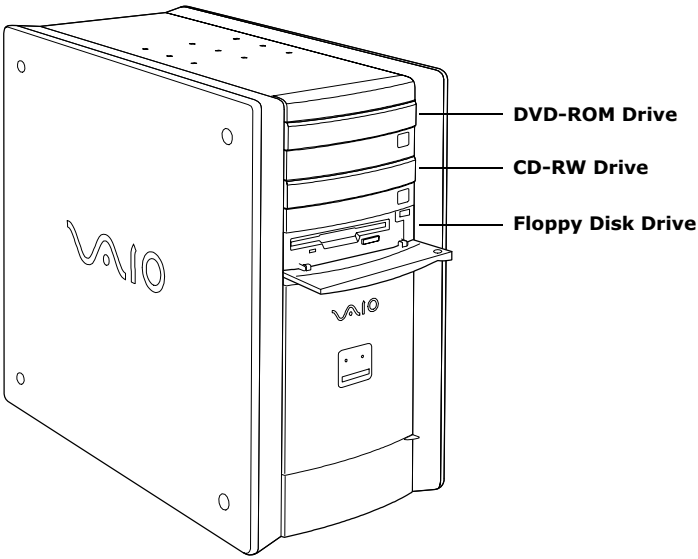

Drive	Description
Floppy disk drive	3.5-inch, 1.44 MB.
DVD-ROM drive	
DVD-ROM read*	16X maximum performance
CD-R/CD-ROM read†	40X maximum performance
CD-RW read‡	32X maximum performance
CD-RW drive	
CD-RW read**	20X maximum performance
CD-RW write††	8X maximum performance
CD-R read‡‡	32X maximum performance
CD-R write***	12X maximum performance
CD-ROM read	32X maximum performance

* Data on a DVD-ROM is read at a variable transfer rate, ranging from 6.6X at the innermost track to 16X at the outermost track (the data transfer standard 1X rate is 1350 KBps). The average data transfer rate is 11.3X (15,255 KBps).

† Data on a CD-R/CD-ROM is read at a variable transfer rate, ranging from 17.5X at the innermost track to 40X at the outermost track (the data transfer standard 1X rate is 150 KBps). The average data transfer rate is 28.6X (4293 KBps).

‡ Data on a CD-RW is read at a variable transfer rate, ranging from 13X at the innermost track to 32X at the outermost track (the data transfer standard 1X rate is 150 KBps).The average data transfer rate is 22.5X (3375 KBps).

** Data on a CD-RW is read at a variable transfer rate, ranging from 8X at the innermost track to 20X at the outermost track (the data transfer standard 1X rate is 150 KBps). The average data transfer rate is 14X (2100 KBps).

†† The CD-RW writing speed may vary, depending on the media. The maximum CD-RW writing speed is 8X.

‡‡ Data on the CD-R/CD-ROM is read at a variable transfer rate, ranging from 13X at the innermost track to 32X at the outermost track (the data transfer standard 1X rate is 150 KBps). The average data transfer rate is 22.5X (3375 KBps).

*** The maximum CD-R writing speed is 12X (1X = 150 KBps).

Buttons and Switches

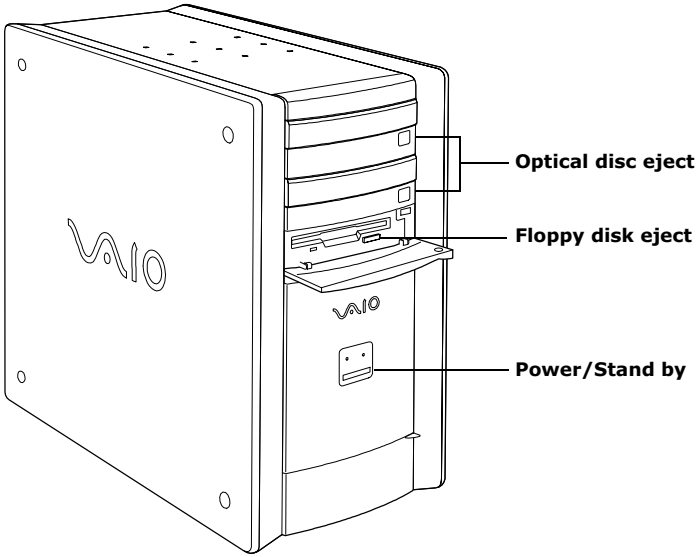

Button or switch	Description
Power/Stand by switch	Turns system power on, off, or into Stand by mode.
Floppy disk eject button	Ejects a floppy disk.
Optical disc eject button	Automatically opens and closes the assigned optical drive tray.

Indicators

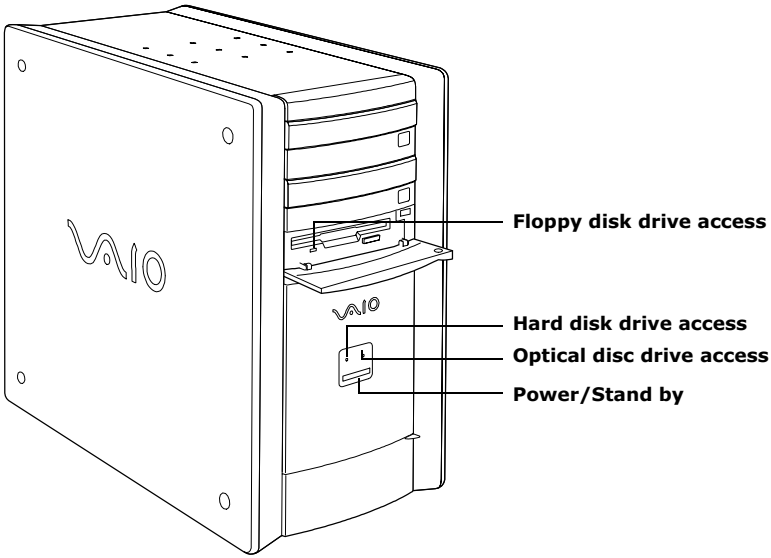

Indicator	Description
Power/Stand by indicator	Stand by (red) indicates the computer is in Stand by mode. On (blue) indicates the computer is out of Stand by mode, ready to use. Off (no color) indicates the computer is turned off or in Hibernation mode.
Floppy disk drive access indicator	On (green) indicates floppy disk drive activity.
Optical drive access indicator	On (red) indicates optical disc activity.
Hard disk drive access indicator	On (red) indicates hard disk drive activity.

Connectors

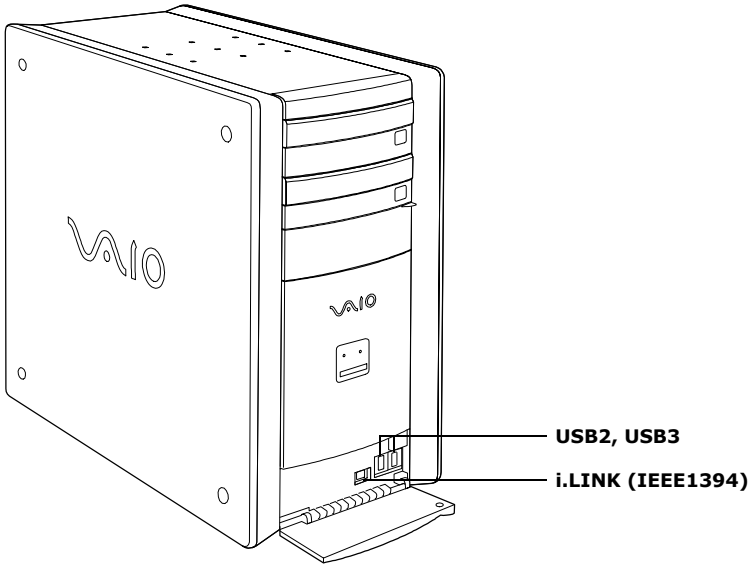

Connector	Description
i.LINK® (IEEE1394)*	Connects to a digital device that has a 4-pin i.LINK connector.
USB	Connects to USB devices.

* To connect to a 6-pin i.LINK device, use the i.LINK connector on the back of the system. A 6-pin i.LINK connector can supply power from the computer to the device if the device also has a 6-pin i.LINK connector. A 4-pin i.LINK connector cannot supply power to the device.

Rear View

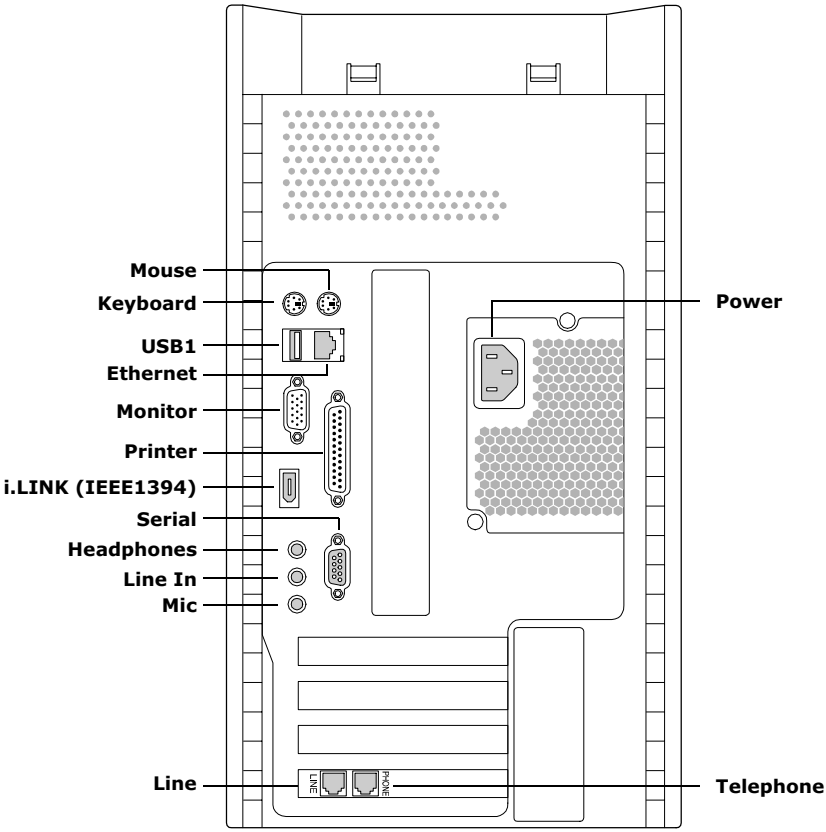
Mouse
Keyboard
USB1
Ethernet
Monitor
Printer
i.LINK (IEEE1394)
Serial
Headphones
Line In
Mic
Line
Power
Telephone
LINE
PHONE

Icons

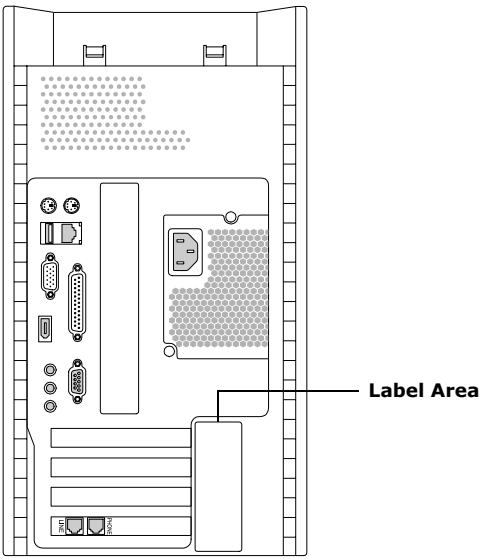

Icon	Description
	Mouse port
	Keyboard port
	USB port
	Ethernet port
	Printer/Parallel port
	Monitor port
	i.LINK® (IEEE1394) port
	Serial port
	Headphones jack

Icon	Description
	Line In jack (audio)
	Mic (microphone) jack
	Line jack (for telephone line from service jack)
	Telephone (for telephone)

I/O Connectors

The following section identifies the various I/O connectors.

Keyboard and Mouse Ports

The keyboard and mouse ports are physically identical and have the same pinout. They are standard 6-pin PS/2®-type female ports.

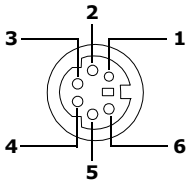

USB Ports

The USB ports are standard 4-pin USB ports. Two USB ports are located at the front and one at the rear of the system.

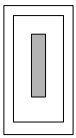

Serial Ports

The serial port is a standard 9-pin DB-9 male port.

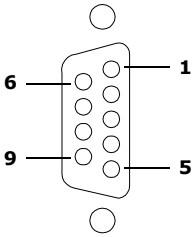

Printer/Parallel Port

The printer/parallel port is a standard 25-pin DB-25 female port.

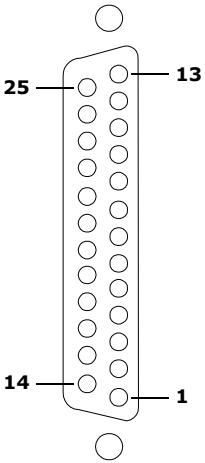

Monitor Port

The monitor port is a standard 15-pin female high-density VGA-type port.

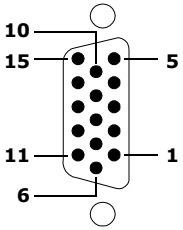

Mic, Line In, and Headphones Jacks

The mic, line in, and headphones jacks are physically identical, but have different connections. They are standard 3.5 mm stereo mini-jacks.

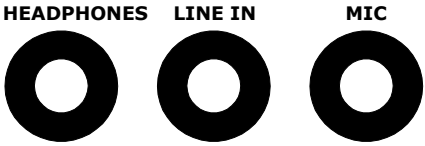

Connector	Description
Headphones	1.0 Vrms (typical).
Mic	Electret condenser microphone input.
Line In	1.0 Vrms (typical), 10 Kohm impedance.

Telephone and Line Jacks

The telephone and line jacks are physically identical and have identical connections. They are standard RJ-11 female phone jacks. However, the line jack is for connecting to a telephone line that comes from the wall, and the telephone jack is for connecting the computer to a telephone.

Your computer will only have one RJ-11 female phone jack if you have a HomePNA modem installed. The modem installed on your computer may differ depending on the configuration you purchased.

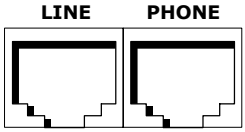

✍ Accidentally plugging a phone line from the wall into the modem's Telephone jack, and a telephone into the Line jack, will not damage the modem card or telephone equipment. However, the modem will not work correctly.

i.LINK® (IEEE1394) Port

The 6-pin i.LINK port on the back of the system can supply power from the computer to a device if the device also has a 6-pin i.LINK port. The 6-pin port supplies 10V to 12V and a maximum power of 6 watts.

✍ i.LINK is a trademark of Sony used only to designate that a product contains an IEEE1394 connection. The i.LINK connection may vary, depending on the software applications, operating system and compatible i.LINK devices. All products with an i.LINK connection may not communicate with each other.

✍ Refer to the documentation that came with your compatible i.LINK device for information on operating conditions and proper connections. Before connecting compatible i.LINK PC peripherals to your system, such as an optical disk or hard disk drive, confirm their operating system compatibility and required operating conditions.

The 4-pin i.LINK port at the bottom of the front panel does not supply power.

6-pin i.Link (IEEE1394)



On back of system

4-pin i.LINK (IEEE1394)



At bottom of front panel

Ethernet Port

The Ethernet port on the rear of the system is used to connect to a 100Base-TX/10Base-T Ethernet network.

Ethernet

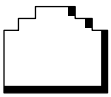

On back of system

Expansion Slots

There are three PCI slots, two of which are available for expansion (PCI No. 2 and No. 3). The other PCI slot is occupied by the fax/modem card (PCI No. 1). There is one AGP slot that is available for expansion.

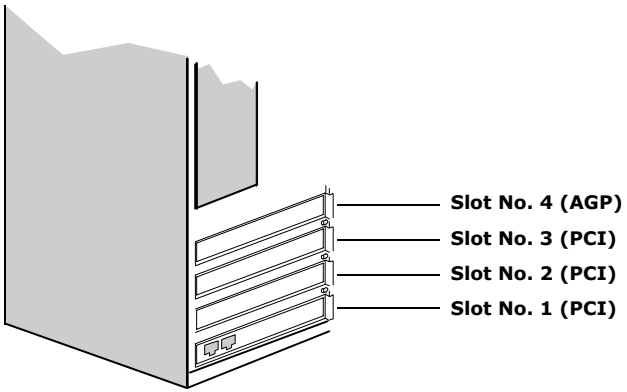

Chapter 2
Configuring Your System

This chapter contains information on configuring your system. Configuring your system can consist of the following:

- Making changes to the BIOS settings
- Making changes to the display's power management settings

Accessing the BIOS Setup Utility

You must access the BIOS Setup Utility to make changes to the BIOS settings (see "CMOS Setup Options" on page 73 for information on BIOS settings).

! **Before rebooting the system, save and close all open files, and exit open applications.**

1. Reboot your computer by selecting Shut Down... from the Start menu, then selecting Restart.
2. When the Sony logo appears, press F2.
3. The AwardBIOS Setup Utility screen appears.

   Each menu presents options for modifying the system configuration. Use the left and right arrow keys to select a menu from the menu bar. Use the up and down arrow keys to select items within a menu. Once an item is highlighted, use the plus/minus (+/-) keys to modify a setting.

   If an item has a triangle (▸) to its left, this indicates that a sub-menu of options is available. Press ENTER to access a sub-menu. If a sub-menu contains items with a triangle, there is another layer of options from which to select.
4. Once you select an option, press ESC to back out of each menu until you reach the top level, where the menu bar appears.
5. To exit the BIOS setup utility, press ESC from any top-level screen and follow the prompts.

Changing the Display's Power Management Settings

A display that has power management capability is designed to operate on reduced power or shut itself off after the system has been idle for a specified period of time.

1 From the Start menu, point to Settings, Control Panel, then click Power Options.

The Power Options Properties dialog box opens, with the Power Schemes tab displayed.

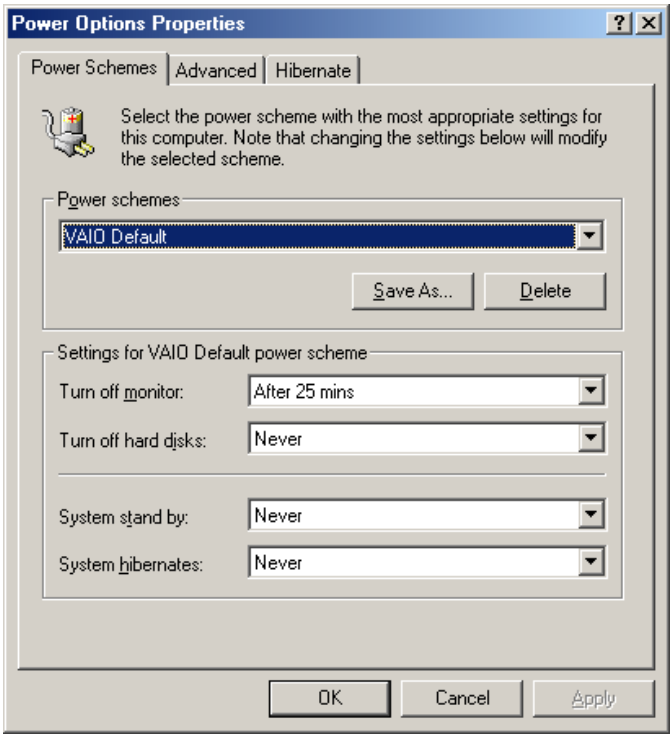

2 Select the power scheme that is most appropriate for the way you use your computer.

To change a power scheme, change the settings for Turn off monitor, Turn off hard disks, System stand by, and System hibernates.

The Turn off monitor option allows you to specify the period of inactivity (in minutes) that you want to elapse before your monitor turns off when your computer is running on AC power. The display reactivates when you move the mouse or press a key.

The Turn off hard disks option allows you to specify the period of inactivity (in minutes) that you want to elapse before your hard disks turn off when your computer is running on AC power.

The System stand by option allows you to specify the period of inactivity (in minutes) that you want to elapse before your computer goes on Stand by when your computer is running on AC power. Power is reactivated when you click the left mouse button or press spacebar on the keyboard.

The System hibernates option allows you to specify the period of inactivity (in minutes) before your computer goes into the hibernate state. Power is reactivated when you push the power button.

3 To save a new power scheme, first modify the settings, click Save As, type a descriptive name, and then click OK.

4 Click the Advanced tab.

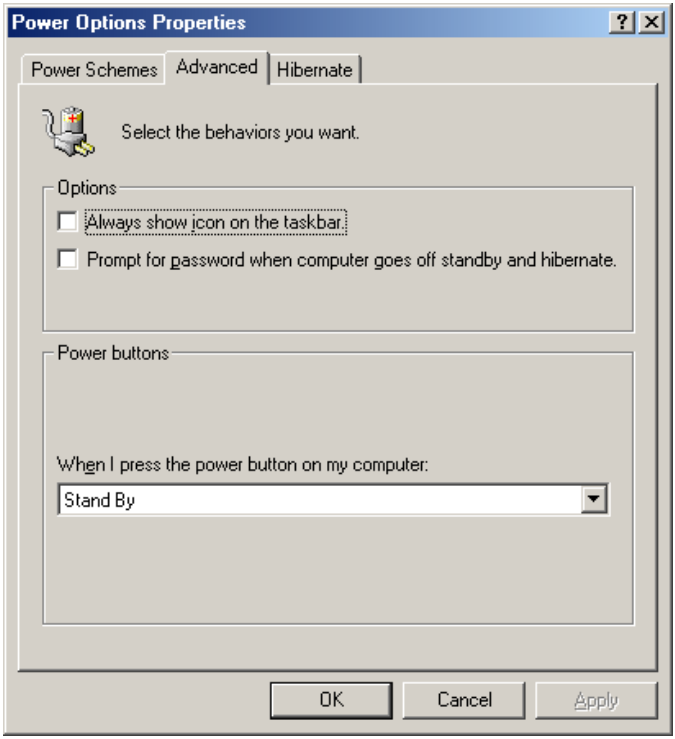

5 Select the desired settings.

6 Click the Hibernate tab.

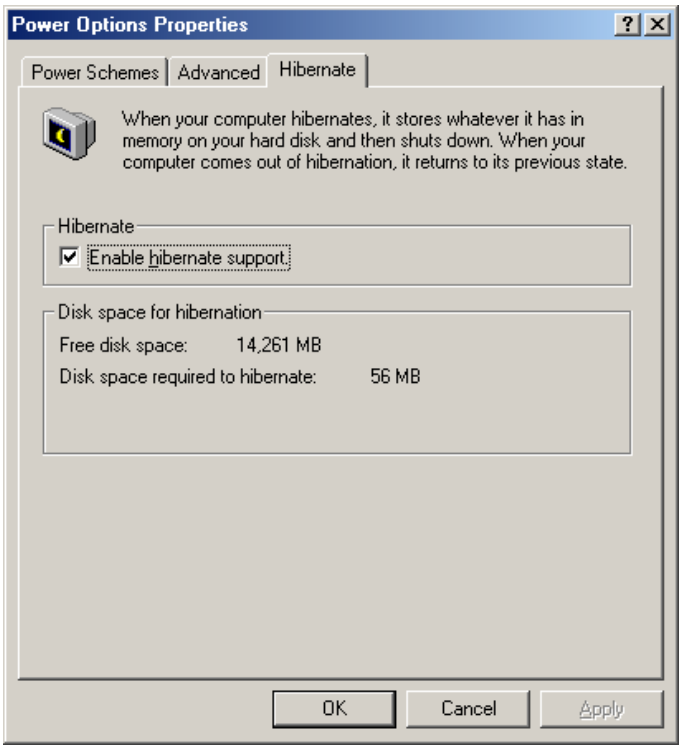

7 Select the desired settings, and then click OK.

Chapter 3
Removing, Installing, and Replacing Components

This chapter describes removing, installing, and replacing major components for upgrading, reconfiguring, and troubleshooting the components.

! **Before opening the system unit, save and close all open files, exit all open applications, turn off the power to all attached peripheral devices, shut down the computer, and unplug the power cord.**

✍ Systems differ by model, so your system may appear different from the illustrations in this chapter.

Removing the Side Cover

You must remove the side cover to access the system board, add-in cards, power supply, battery, memory, and internal drives.

1 From the rear of the unit, pull the metal tab shown in the next diagram.

2 Pull the top of the side cover away from the unit about two inches, then gently lift out the side cover.

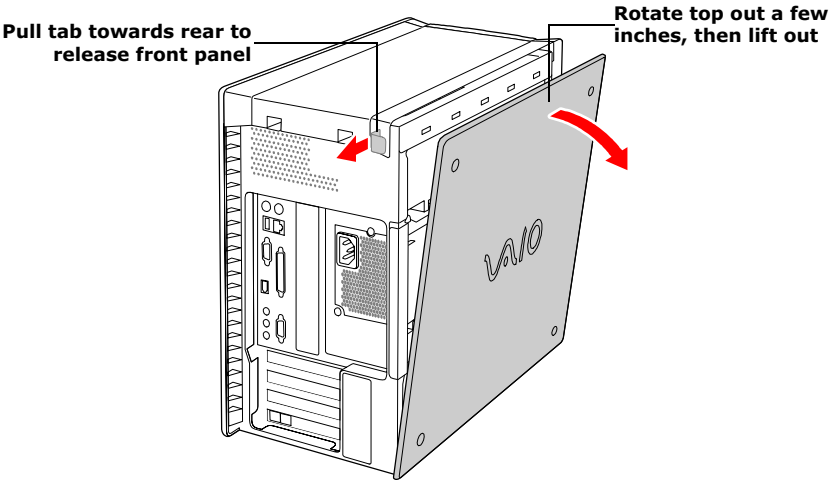

Replacing the Side Cover

1 From the rear of the unit, align the bottom of the side cover so that it slips into the lip on the bottom of the unit.

2 Push the top of the side cover up against the top of the unit until the side cover snaps into position.

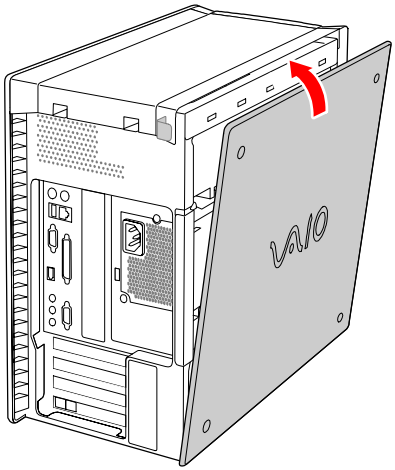

Installing a PCI Add-In Card

! **Before opening the system unit, save and close all open files, exit all open applications, turn off the power to all attached peripheral devices, shut down the computer, and unplug the power cord.**

1 Remove the side cover (see "Removing the Side Cover" on page 24).

2 Locate an available expansion slot.

3 Remove the slot cover adjacent to the selected slot (see "Removing a Slot Cover" on page 39).

4 Insert the add-in card into the PCI slot. Use a gentle rocking motion, pressing down until the card is fully seated.

✍ Align the card's bracket so that the bottom of the bracket fits into the slot at the bottom of the chassis. Assure that the top of the bracket fits snugly against the chassis lip after the card is fully inserted.

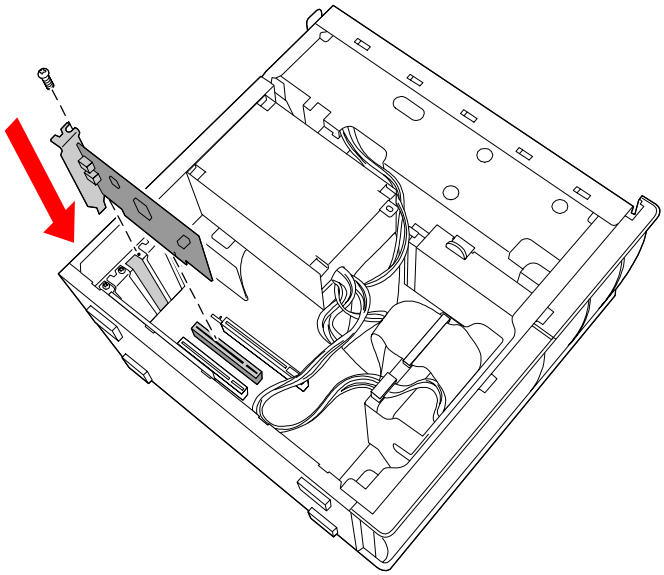

5 Replace the screw that secures the card.

6 Attach any necessary cables to the card (see the instructions that came with the add-in card).

7 Replace the side cover (see "Replacing the Side Cover" on page 25).

8 Turn on the computer and follow any instructions that came with the add-in card.

Removing a PCI Add-in Card

! **Before opening the system unit, save and close all open files, exit all open applications, turn off the power to all attached peripheral devices, shut down the computer, and unplug the power cord.**

1 Remove the side cover (see "Removing the Side Cover" on page 24).

2 Disconnect any cables attached to the add-in card you want to remove.

3 Remove the screw that secures the add-in card to the chassis.

! **Hold the add-in card by its edges and do not touch any components or connector contacts on the card. Static electricity in your body may damage sensitive components on the card. As a precaution, touch any exposed metal part on the metal chassis (preferably the metal part on the power supply) before handling an add-in card to discharge any static electricity in your body.**

4 Remove the add-in card from the PCI slot and store the card in an anti-static wrapper for future use.

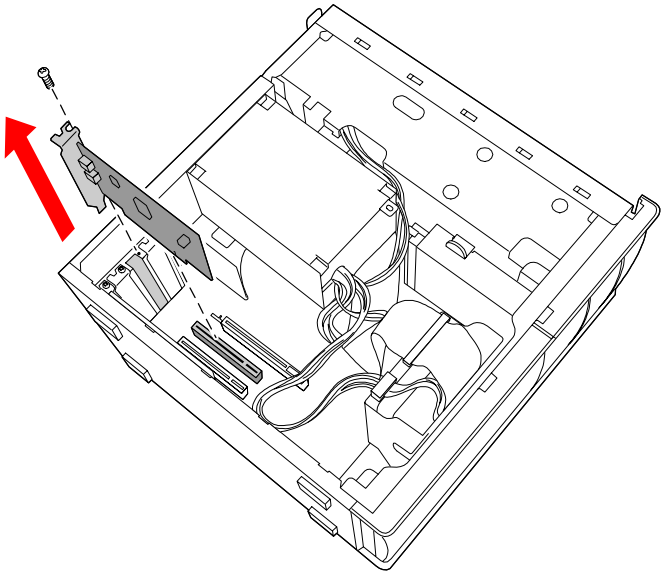

✍ Grasp the card with one hand on each end, and gently pull up as you rock the card from side to side.

5 If you do not replace the card or install another add-in card, install a slot cover over the vacant slot at the rear of the chassis (see "Covering an Open I/O Slot" on page 40).

6 Replace the side cover (see "Replacing the Side Cover" on page 25).

Installing an Add-On AGP Card

Your computer has one open AGP expansion slot. This slot enables you to install an AGP card to enhance your system's graphics capabilities. The length of the AGP card should not exceed 9.05 inches.

✍ Installing an AGP card disables the internal graphics. Your system supports AGP 4X enabled graphics cards.

! **Before opening the system unit, save and close all open files, exit all open applications, turn off the power to all attached peripheral devices, shut down the computer, and unplug the power cord.**

1 Remove the side cover (see "Removing the Side Cover" on page 24).

2 Remove the slot cover from the AGP slot (see "Removing a Slot Cover" on page 39).

3 Press down on the end latch (see diagram) before inserting the AGP card.

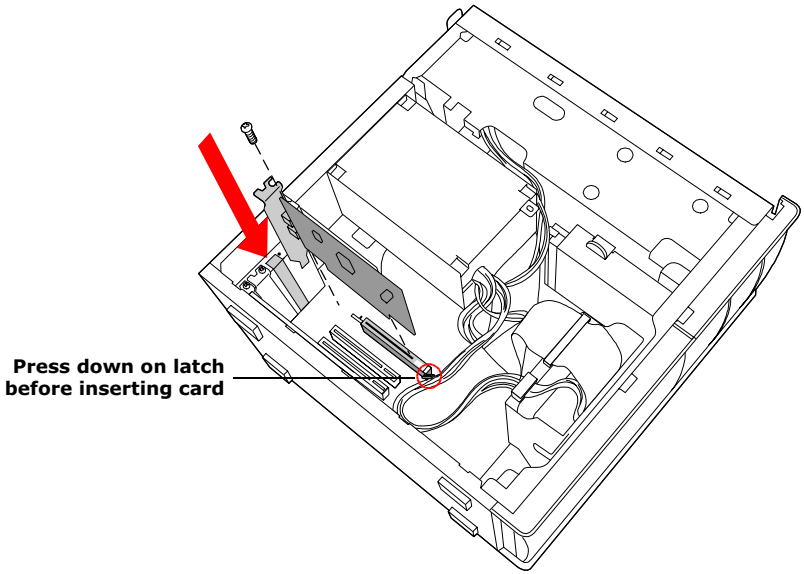

4 Firmly insert the AGP card into the slot.

5 Lift up the end latch if the latch does not automatically lock back into place.

6 Secure the AGP card with the screw removed in step 2.

7 Replace the side cover (see "Replacing the Side Cover" on page 25).

8 Attach the monitor cable to the monitor port on the AGP card.

9 Turn on the computer.

10 Follow the instructions that came with the AGP card to install the AGP card driver.

Replacing the Lithium Battery

You may need to replace the lithium battery if your computer consistently loses the date or time settings after turning it off. The lithium battery has a typical life of three years, after which the battery may be too weak to power the CMOS memory.

! **When you remove the lithium battery, all values stored in the CMOS memory (BIOS setup values and Plug and Play values) may be lost. Although the computer can hold the charge for a short time while replacing the battery, it is safer to assume that the settings will be lost. When the values are lost, the BIOS values revert to their factory-default settings (see "Accessing the BIOS Setup Utility" on page 18).**

Do not handle damaged or leaking batteries.

The lithium battery may explode if mistreated. Do not disassemble it or dispose of it in fire.

1 Reboot your computer by selecting Shut Down... from the Start menu, and then selecting Restart.

2 If the error message "Error: Check date and time settings"appears during the reboot sequence, press F2 during the reboot process to access the BIOS Setup Utility. Otherwise it is not necessary to replace the battery at this time, and you can skip all remaining steps.

3 Compare all the BIOS options to their default settings (see "CMOS Setup Options" on page 73). Make a list of all the BIOS options that are different from their default values. You will refer to this list when you restore the BIOS settings later.

4 Select Exit Discarding Changes from the main menu using the right arrow key.

5 Press Enter, type Y when prompted to discard changes, then press Enter to exit the BIOS Setup Utility.

6 Turn off the computer.

! **Before opening the system unit, save and close all open files, exit all open applications, turn off the power to all attached peripheral devices, shut down the computer, and unplug the power cord.**

7 Remove the side cover (see "Removing the Side Cover" on page 24).

8 If necessary, remove any add-in cards (see "Removing a PCI Add-in Card" on page 27) to gain access to the battery. You may also need to disconnect some cables.

! **Touch any exposed metal part of the chassis to discharge static electricity in your body before handling an add-in card or other sensitive electronic component.**

9 Use a small flathead screwdriver or your finger to push in (not down) against the small tab at one end of the battery holder to pop out the battery.

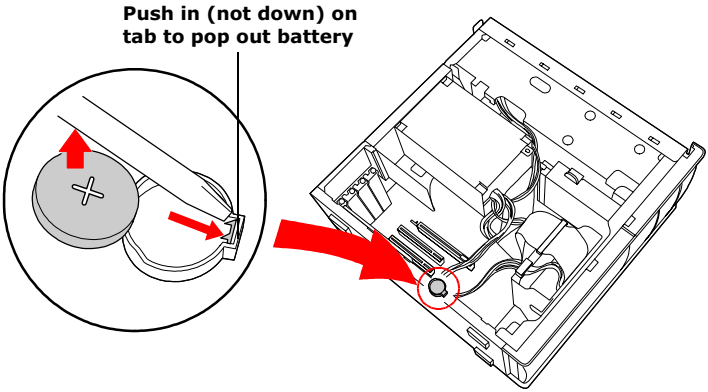

10 Gently lift out the battery and dispose of it according to the instructions that came with the new battery.

11 Insert the new battery into the battery holder, with the plus (+) side up, and press down until the battery is secure.

✍ The Sony CR2032 battery is recommended. Using a type of battery other than a CR2032 may present a risk of fire or explosion.

12 Replace any add-in cards that were removed.

13 Reconnect any cables that were disconnected.

14 Replace the side cover (see "Replacing the Side Cover" on page 25).

15 Reconnect the power cord and turn on the computer.

16 If the error message “Error: Check date and time settings.” appears during the reboot sequence, press F2 during the reboot process to access the BIOS Setup Utility. If no error message displays, the computer’s BIOS settings were retained during the battery replacement and you can skip the remaining steps.

17 Refer to the list you made in step 3 and restore any non-default BIOS settings (see “CMOS Setup Options” on page 73).

18 Select Exit Saving Changes from the main menu using the right arrow key.

19 Press Enter, type Y when prompted to discard changes, then press Enter to exit the BIOS Setup Utility.

The computer’s BIOS settings are now restored.

Installing System Memory

! **Before opening the system unit, save and close all open files, exit all open applications, turn off the power to all attached peripheral devices, shut down the computer, and unplug the power cord.**

1 Choose the size of the memory module and configuration as shown in the following table. Memory modules can vary in size and speed between sockets. The minimum memory size is 8 MB. The maximum memory size is 512 MB. The BIOS automatically detects the type, size and speed of the memory modules.

Memory module configurations (MB)*

DIMM1	*DIMM2*
0, 8, 16, 32, 64, 128, 256	0, 8, 16, 32, 64, 128, 256

* The PCV-RX450/PCV-RX460 ships with at least 128 MB. SDRAM is expandable to 512 MB. Your model may ship with more than 128 MB SDRAM depending on the configuration you purchased.

✍ Use only 133 MHz FSB-supported memory. Does not support EDO memory or buffered SDRAM memory.

2 Remove the side cover (see "Removing the Side Cover" on page 24).

3 Remove the power supply (see "Removing the Power Supply" on page 45).

4 If necessary, remove the memory module you wish to replace (see "Removing a Memory Module" on page 37).

! **Touch any exposed metal part of the chassis to discharge static electricity in your body before handling a memory module.**

5 If necessary, remove any previously installed AGP cards.

6 Remove the new memory module(s) from its anti-static package. Hold the memory module only by its edges to prevent static-electricity damage.

7 Align the module over the appropriate slot, noting the location of pin 1 on the module and pin 1 on the slot.

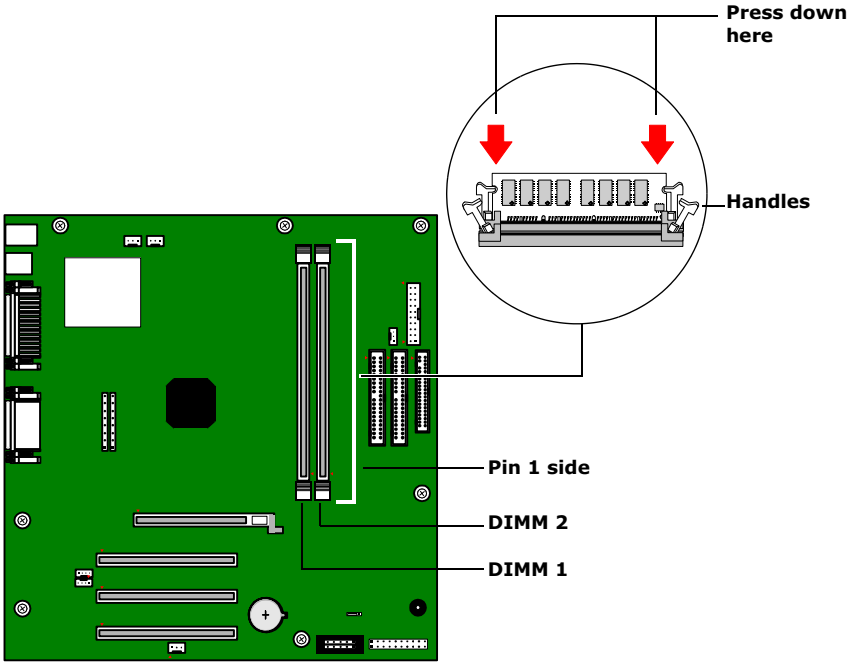

Memory module (DIMM)

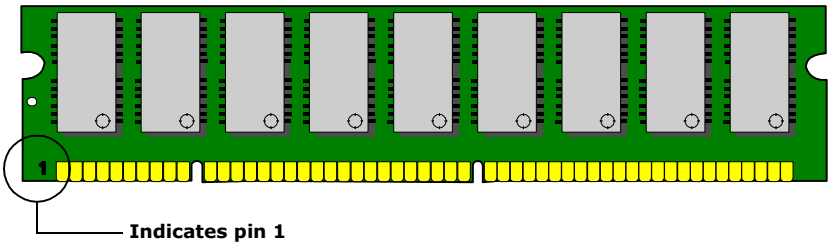

8 Carefully but firmly insert the edge of the module into the slot.

9 Press down firmly and evenly at both corners until the module is fully seated.

When the module is fully seated, the handles on each side are straight up and locked into the slot on each side of the module. If the handles are not totally straight upright, continue to press down on each side of the module until the handles lock into place.

10 Replace the power supply (see "Replacing the Power Supply" on page 46).

11 Replace the side cover (see "Replacing the Side Cover" on page 25).

12 Reconnect the power cord and turn on the computer.

Your computer automatically recognizes the extra memory and will configure itself accordingly when you turn on the computer. No further action is required.

Removing a Memory Module

You may need to remove a memory module if you change the memory configuration or replace a bad module.

! **Before opening the system unit, save and close all open files, exit all open applications, turn off the power to all attached peripheral devices, shut down the computer, and unplug the power cord.**

1 Remove the side cover (see "Removing the Side Cover" on page 24).

✍ The memory modules are located beneath the power supply. You need to remove the power supply to reach the memory modules.

2 Remove the power supply (see "Removing the Power Supply" on page 45).

! **Touch any exposed metal part of the chassis to discharge static electricity in your body before handling the memory module.**

3 Locate the memory module you wish to remove.

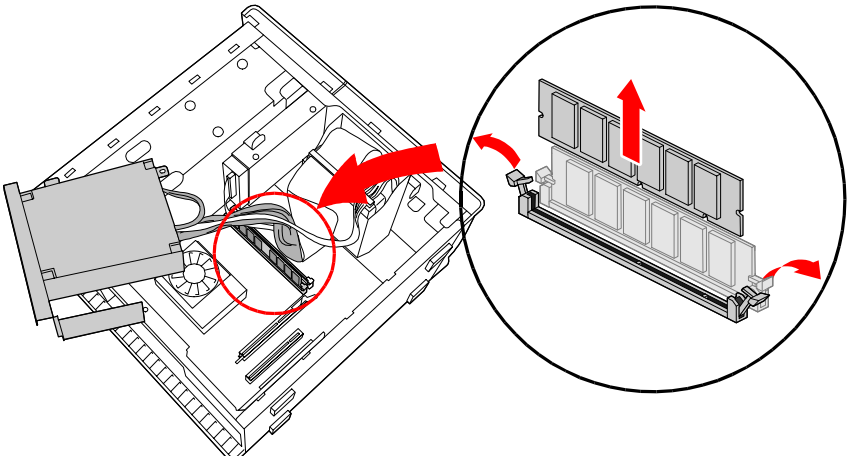

4 Reach around each side of the power supply and push down the handle on each side of the memory module to eject the module from its slot.

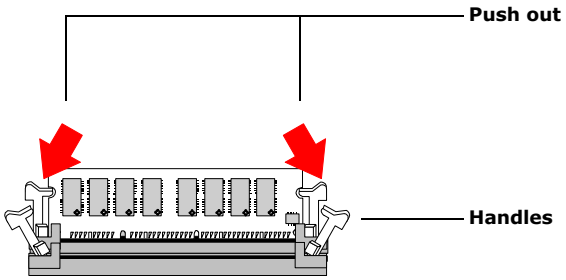

5 Grasp one edge of the memory module and lift out. Store the module in a static-free bag.

Removing a Slot Cover

You remove a slot cover when you install an add-in card that occupies a previously-empty slot.

! **Before opening the system unit, save and close all open files, exit all open applications, turn off the power to all attached peripheral devices, shut down the computer, and unplug the power cord.**

1 Remove the side cover (see "Removing the Side Cover" on page 24).

2 Locate the slot whose cover you want to remove.

3 Lay the system on its side.

4 Remove the screw from the slot cover.

5 Remove the loose slot cover and retain it for future use.

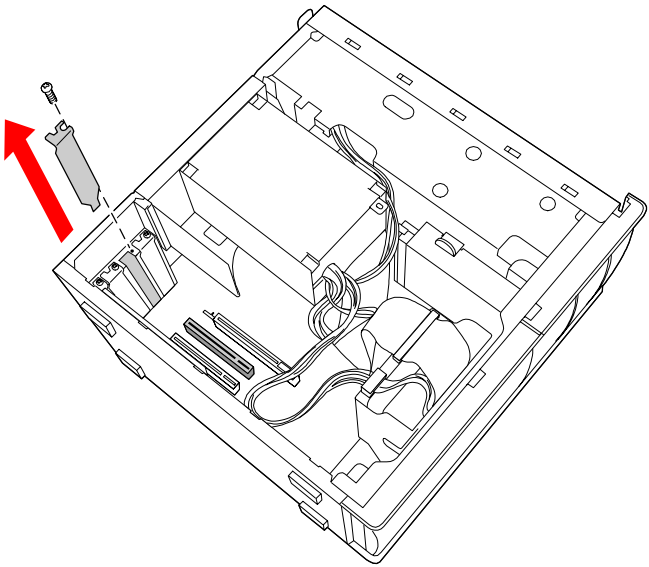

Covering an Open I/O Slot

Slot covers prevent air from escaping through the empty hole. If air escapes, the components inside the computer cannot be properly cooled. This may damage some components, especially the main processor (which generates the most heat).

! **Before opening the system unit, save and close all open files, exit all open applications, turn off the power to all attached peripheral devices, shut down the computer, and unplug the power cord.**

1 Slide the tip of the slot cover (removed earlier) between the chassis and system board.

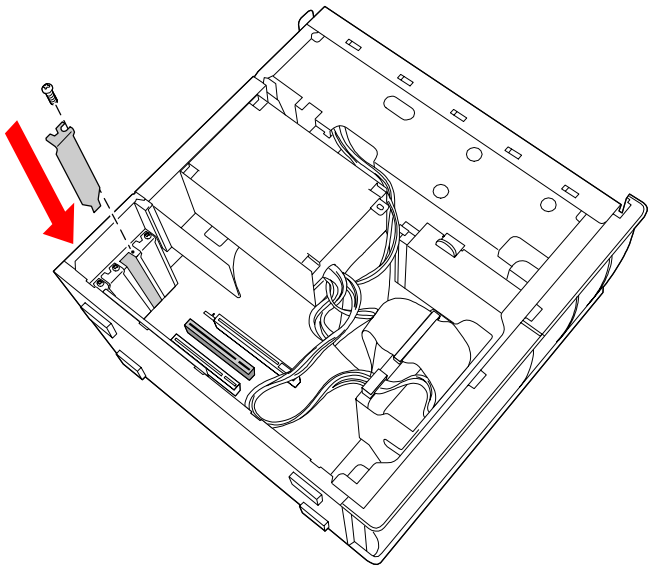

2 Push the slot cover down until it rests firmly on the lip in the chassis. All add-in card brackets and slot covers rest on this lip.

3 Replace the screw (removed earlier) to secure the I/O slot cover.

Installing a 3.5-inch Internal Hard Disk Drive

Your system comes with an available bay to hold an additional 3.5-inch hard disk drive. The drive you install must not require front panel access. The hard disk drive access light blinks when either internal drive is active.

✍ Some models, such as Configure-to-Order (CTO) systems, may already have a second hard disk drive installed.

! **Before opening the system unit, save and close all open files, exit all open applications, turn off the power to all attached peripheral devices, shut down the computer, and unplug the power cord.**

1 Configure the jumpers on the new drive as a slave device (see your drive's documentation for configuration instructions).

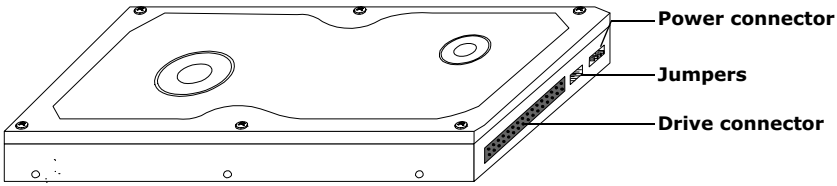

2 Remove the side cover (see "Removing the Side Cover" on page 24).

3 Disconnect the drive connector (A in diagram).

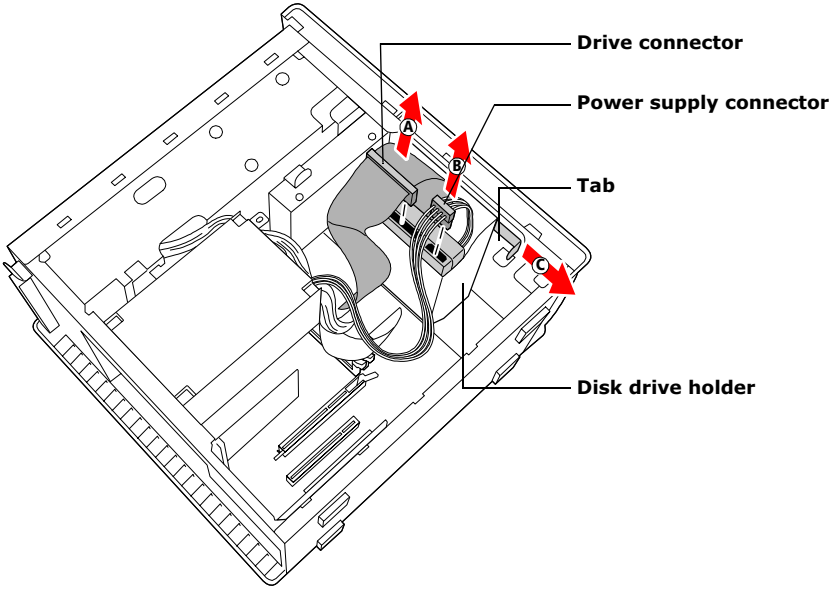

4 Disconnect the power connector (B in diagram).

5 Pull out on the tab (C) that secures the drive holder to the chassis.

6 Slide the drive holder up and out.

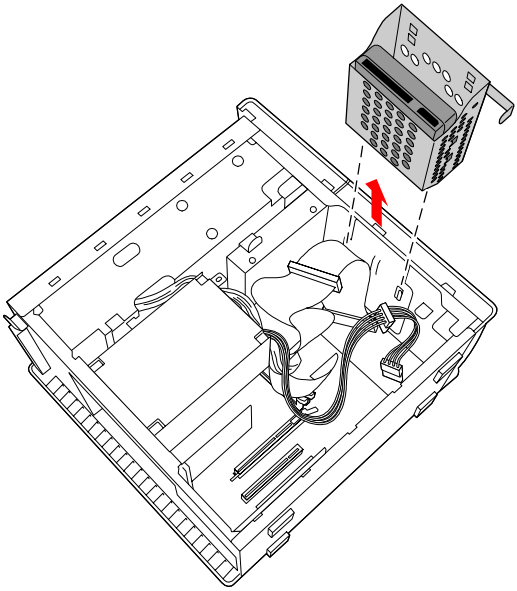

7 Slide the new drive into the bottom part of the drive holder and align the holes on each side of the drive holder.

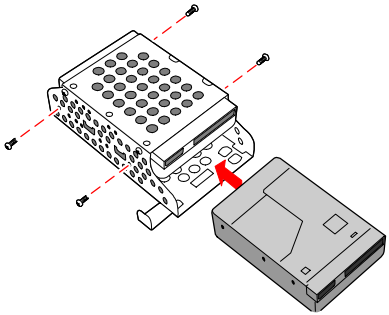

8 Secure the drive to the drive holder using screws in each of the two holes on each side of the drive holder (screws are provided with the new drive). Do not overtighten the screws.

9 Slide the drive holder back into the chassis so that the edge of the holder is flush with the chassis.

10 Push in on the tab (A) to securely latch the holder to the chassis.

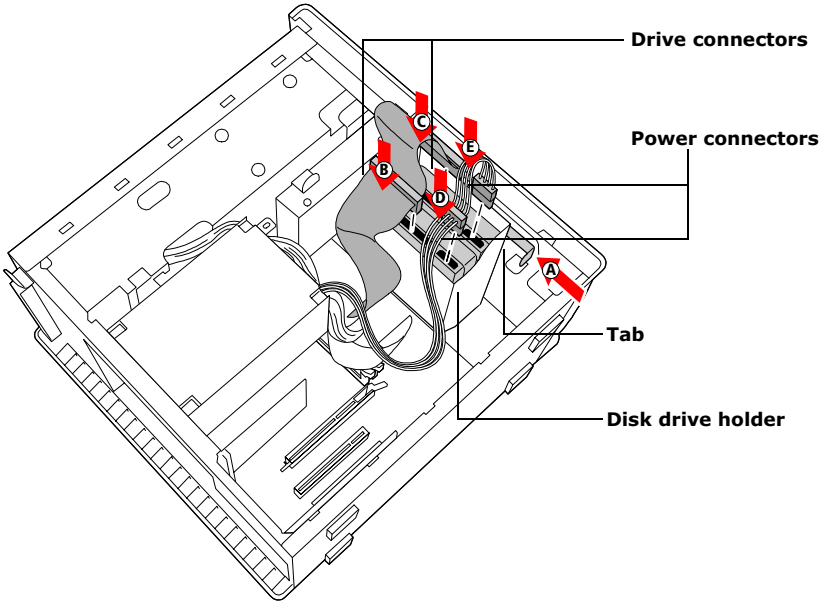

11 Connect the inner drive cable connector (B) to the first drive.

12 Connect the outer drive cable connector(C) to the second drive.

13 Connect the first power connector (D) to the first drive.

14 Connect the second power connector (E) to the second drive.

15 Replace the side cover (see "Replacing the Side Cover" on page 25).

16 Reconnect the power cord to the system and then turn on your computer.

Your computer automatically recognizes the new drive and configures itself accordingly when you turn it on. Format and partition the new drive by following the instructions provided with the drive.

Removing the Power Supply

You remove the power supply when you insert a memory module (see "Installing System Memory" on page 34).

! **Before opening the system unit, save and close all open files, exit all open applications, turn off the power to all attached peripheral devices, shut down the computer, and unplug the power cord.**

1 Remove the screw that secures the power supply to the rear of the chassis.

2 Pull the tab (A) that latches the power supply to the chassis.

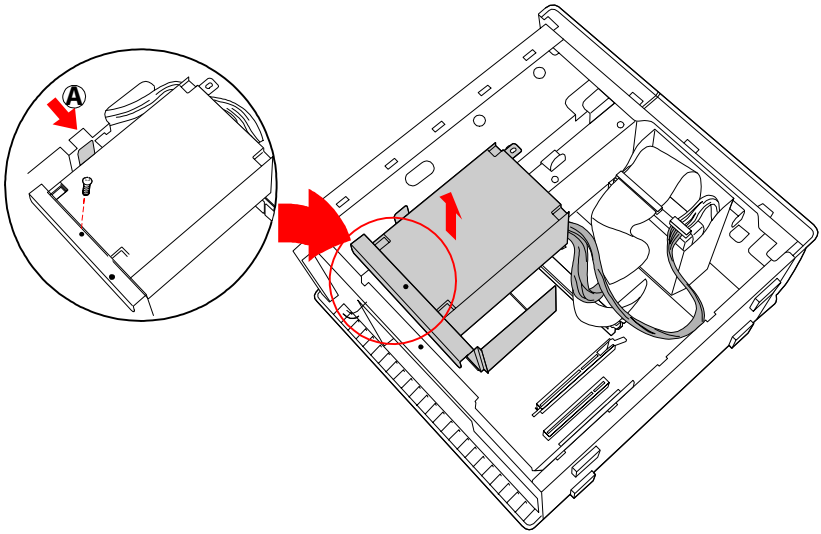

3 Slide the power supply up until the power supply clears the chassis.

4 Rotate the power supply upside down and rest it on top of the chassis where the hard drive is located.

Replacing the Power Supply

1. Rotate the power supply down and slide it into the chassis along the rails to each side of the chassis until the tab snaps into position.
2. Replace the screw that secures the power supply to the rear of the chassis.

Chapter 4
System Board

This chapter identifies each component on the system board and provides a detailed description of each header, connector, and jumper on the system board.

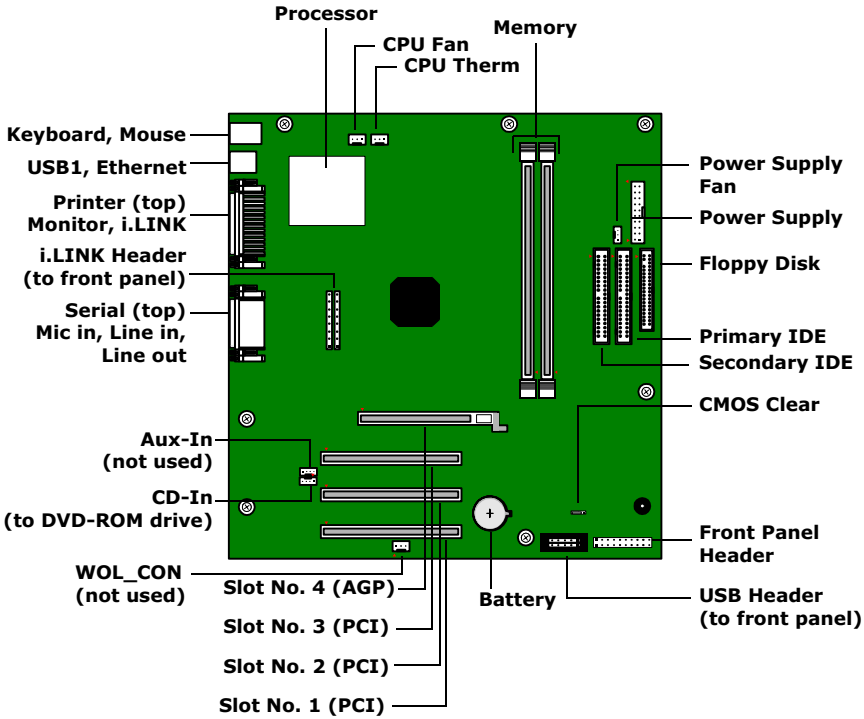

Connectors and Headers

Front Panel Header

The front panel header is a 20-pin header (one pin is removed for the key) that provides connections to various front panel functions. A 20-pin connector with only eight wires is used to interface the system board to the front panel.

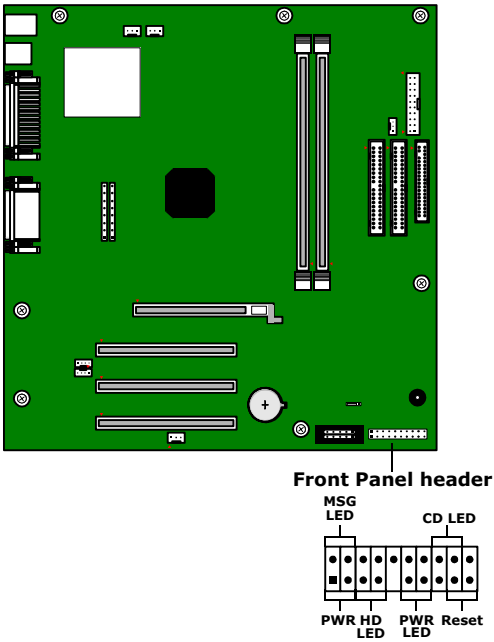

Front Panel header

Name	Description
CD-LED	Connects to the CD/DVD drive access light on the front panel.
PWR LED	Connects to the power-on indicator light on the front panel
HD LED	Connects to the hard disk drive access light on the front panel
SLEEP	(not used)
PWR	Connects to the power-on switch on the front panel
RESET	(not used)
MSG LED	Connects to the Stand by indicator light on the front panel.

Floppy Disk Drive Header

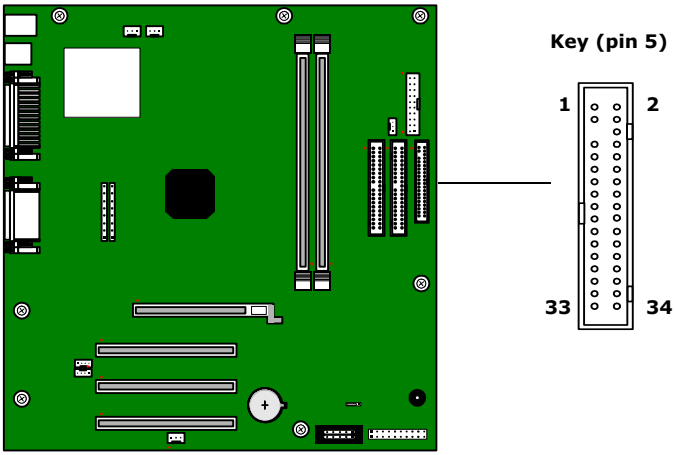

Memory Module (DIMM) Slots

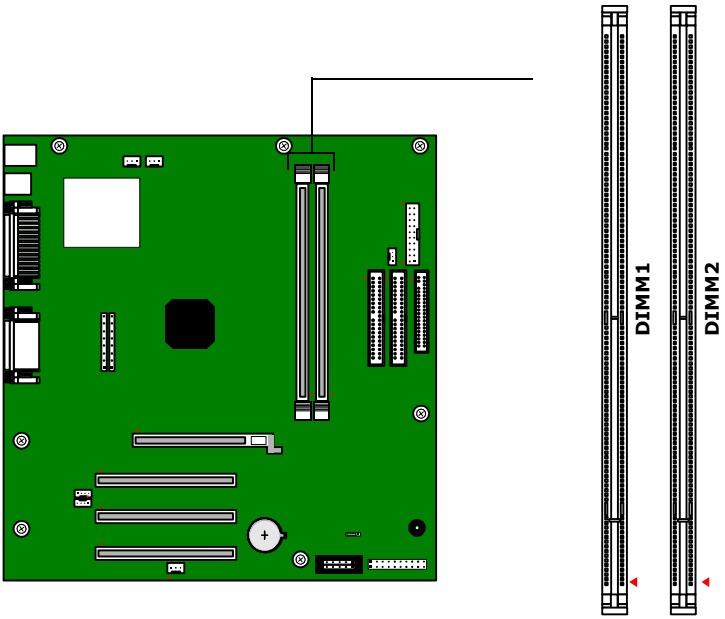

Both sides of each Dual Inline Memory Module (DIMM) look very similar. The side with pin 1 has a small "1" to the left of pin 1. Be sure to orient a DIMM correctly in the DIMM slot (a small triangle on the slot indicates pin 1).

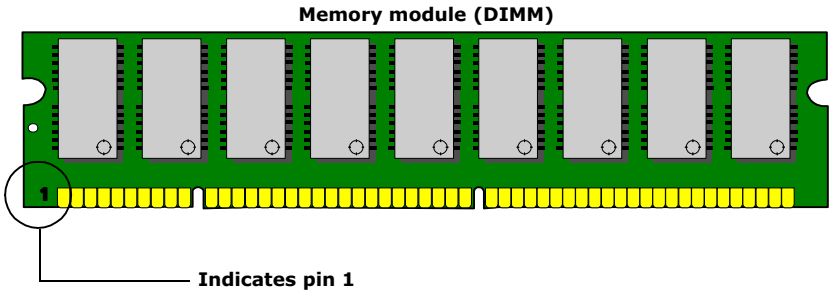

PCI Slots

There are a total of three PCI slots (slots No. 1 to No. 3). Two PCI slots (No. 2 and No. 3) are available. The other PCI slot is occupied by the fax/modem card (No. 1). Your modem may look different depending on whether it is a Lucent modem or an HPNA modem. The PCI slots support 32-bit 5 V and Universal (3.3/5 V) PCI add-in cards.

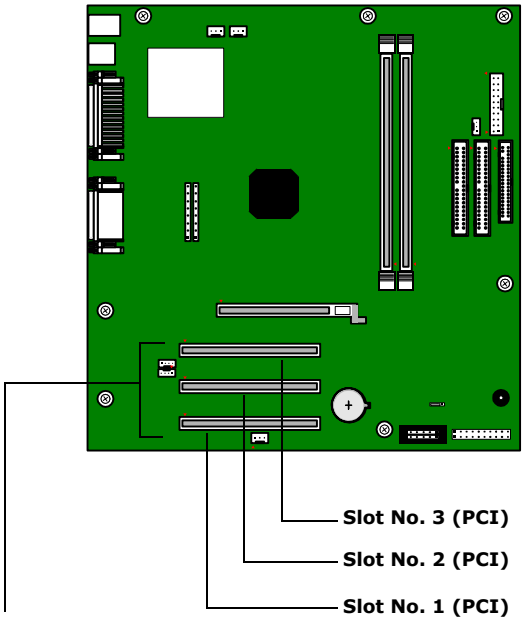

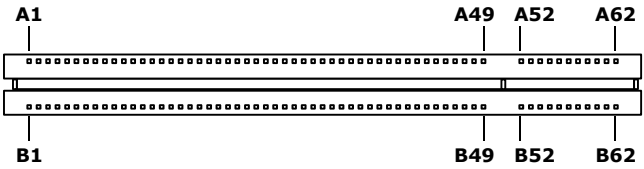

AGP Slot

There is one AGP slot (slot No. 4). This slot enables you to install an AGP card to enhance your system's graphics capabilities. The length of the AGP card should not exceed 9.05 inches.

Installing an AGP card disables the internal graphics. Your system supports AGP 4X enabled graphics cards.

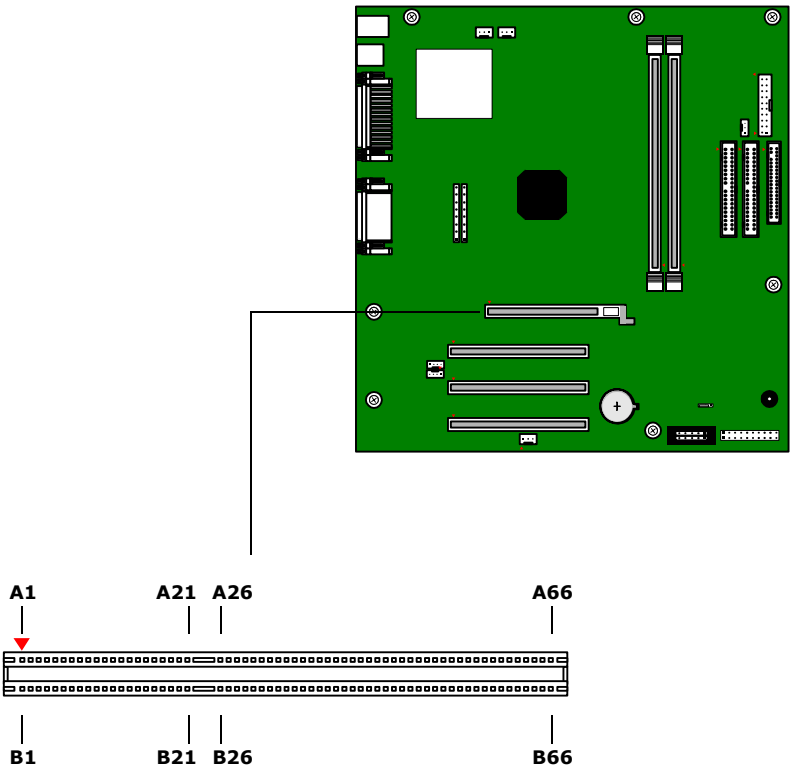

IDE Headers

There are two IDE (Integrated Drive Electronics) headers on the system board: a Primary IDE and a Secondary IDE header.

Each 40-pin IDE header supports up to two IDE drives using a ribbon cable with two connectors.

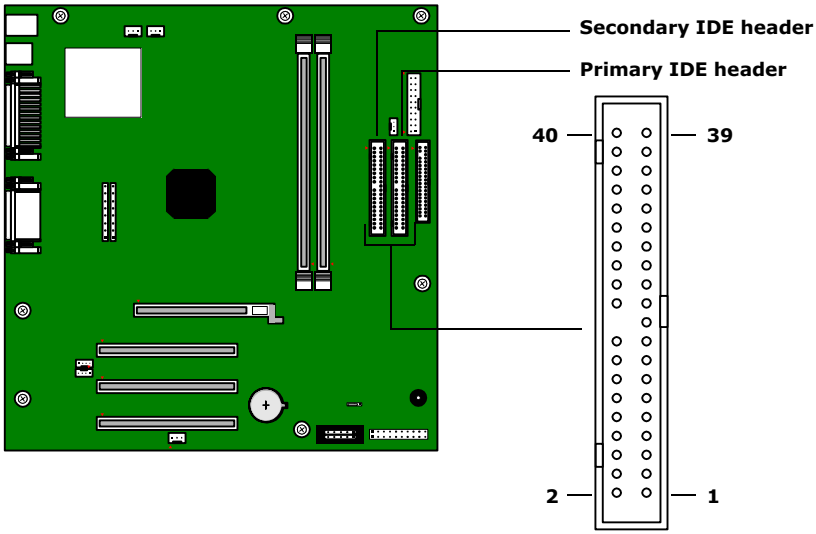

Keyboard and Mouse Ports

The keyboard port and the mouse port are 6-pin female PS/2-type (mini-DIN) ports. They have identical pinouts.

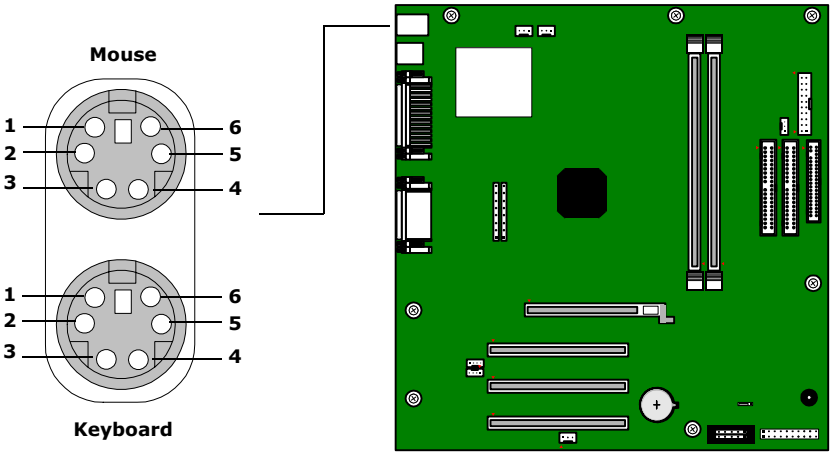

Keyboard and Mouse Ports

Pin	*Signal Name*
1	DATA
2	NC
3	LOGIC GND
4	+5V (fused)
5	CLOCK
6	NC

USB Ports, USB Header, and Ethernet Port

There are three USB ports that permit connection of three USB peripheral devices directly to the system without having to use an external hub.

USB1 is a standard USB port that is accessible from the rear panel.

USBHEAD is a 12-pin header that connects to two standard USB ports (USB2 and USB3) that are accessible at the bottom of the front panel. An internal cable connects USBHEAD to an interface board behind the front panel. If more USB devices are needed, connect an external hub to any USB port.

There is one Ethernet port is used to connect to a 100Base-TX/10Base-T Ethernet network.

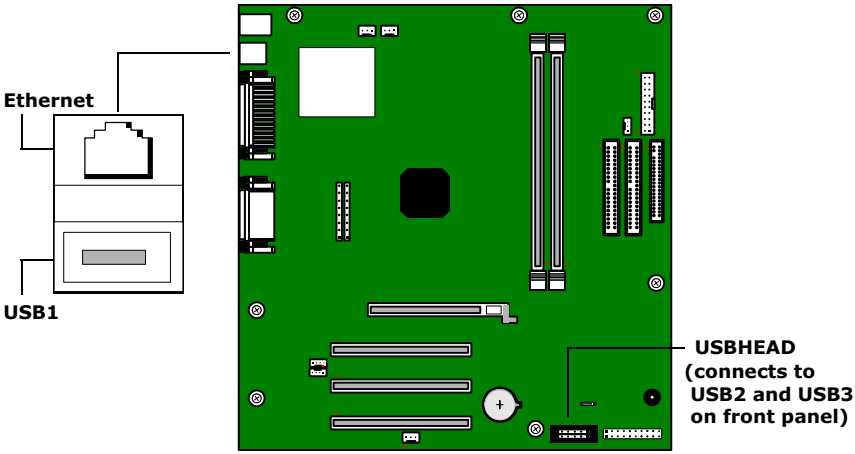

USBHEAD (connects to USB2 and USB3 on front panel)

Pin	*Signal Name*
1	NC
2	NC
3	NC
4	NC (Key)
5	USB VCC2*
6	USB VCC3*
7	USBP2-
8	USBP3-
9	USBP2+
10	USBP3+

USBHEAD (connects to USB2 and USB3 on front panel) (cont.)

11	Ground
12	Ground

* Uses over-current protector.

USB1 and Ethernet port

Pin	*Signal Name*
1	ACTLEDP
2	ACTLEDN
3	LILEDP
4	LILEDN
5	TXPCON
6	TXNCON
7	RXPCON
8	LANP5
9	LANP5
10	RXNCON
11	LANP8
12	LANP8
13	USBVCC1*
14	USBP1-
15	UCBP1+
16	GND
17	NC
18	NC
19	NC
20	NC

* Uses over current protector.

Printer, Monitor, and i.LINK Connectors

The printer, monitor, and i.LINK (IEEE1394) connectors are mounted in a single bracket on the system board. The printer connector is a DB-25 female connector. The monitor connector is a standard 15-pin female high-density VGA-type connector.

The 6-pin i.LINK connector on the back of the system can supply power from the computer to a device if the device also has a 6-pin i.LINK connector. The 6-pin connector supplies 10V to 12V and a maximum power of 6 watts.

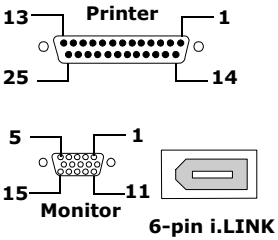

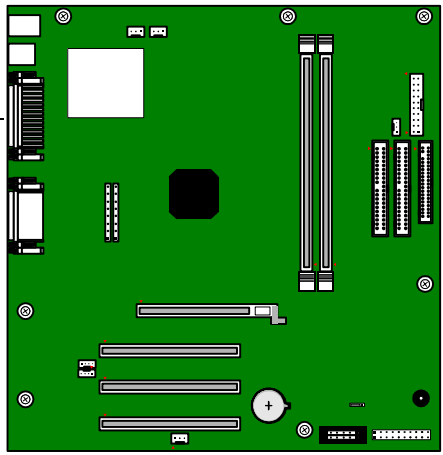

Printer connector

Pin	*Signal Name*
1	STROBE -
2	DATA BIT 0
3	DATA BIT 1
4	DATA BIT 2
5	DATA BIT 3
6	DATA BIT 4
7	DATA BIT 5
8	DATA BIT 6
9	DATA BIT 7
10	ACK -
11	BUSY
12	PE

Printer connector (cont.)	
Pin	*Signal Name*
13	SELECT
14	AUTO-FEED -
15	ERROR -
16	INIT -
17	SELECT-IN -
18	LOGIC GND
19	LOGIC GND
20	LOGIC GND
21	LOGIC GND
22	LOGIC GND
23	LOGIC GND
24	LOGIC GND
25	LOGIC GND

Monitor connector	
Pin	*Signal Name*
1	RED
2	GREEN
3	BLUE
4	NC
5	DDC GND
6	RED GND
7	GREEN GND
8	BLUE GND
9	Reserved
10	GND
11	NC
12	SDA
13	HORIZONTAL SYNC
14	VERTICAL SYNC
15	SCL

i.LINK connector	
Pin	*Signal Name*
1	VP (Power)*
2	Ground
3	TPB
4	TPB
5	TPA
6	TPA

* Uses over-current protector.

i.LINK Header

i.LINK header is an 8-pin header that connects to a 4-pin i.LINK connector that is accessible at the bottom of the front panel. An internal cable connects the i.LINK header to an interface board behind the front panel.

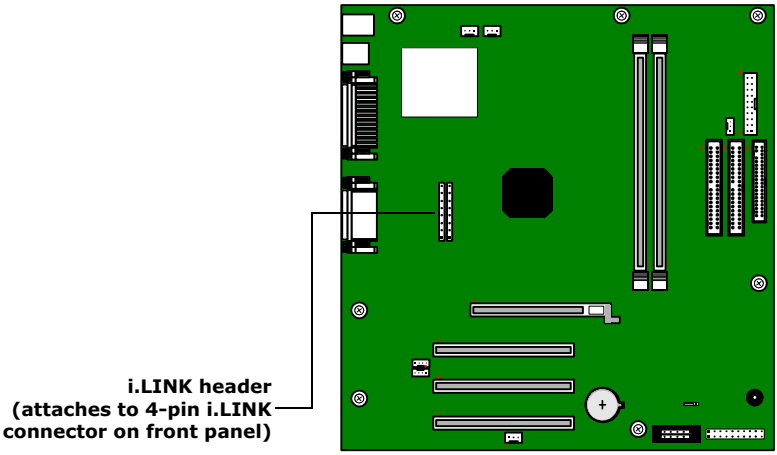

i.LINK header

Pin	*Signal Name*
1	Shell Ground
2	Ground
3	TPA
4	TPA
5	TPB
6	TPB
7	Ground
8	VP (Power)*

* Uses over-current protector.

Serial Port, Headphones, Line In, and Mic Connectors

The serial connector is a DB-9 male connector. The headphones, line in, and mic jacks are stereo mini-jacks (3.5 mm). The headphones jack connects to headphones. The line in jack connects to a stereo audio source (not an audio source from a video device). The mic jack connects to a microphone.

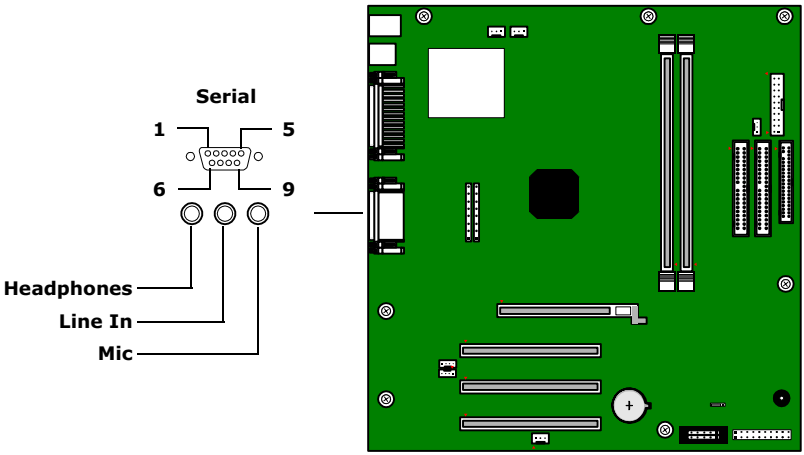

Serial connector	
Pin	*Signal Name*
1	DCD
2	RXD
3	TXD
4	DTR
5	LOGIC GND
6	DSR
7	RTS
8	CTS
9	RI

Headphones

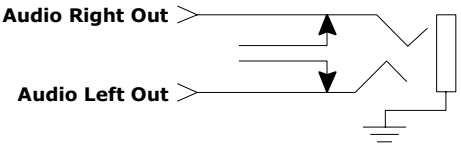

Line In

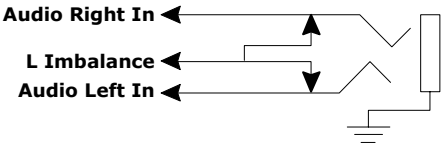

Mic

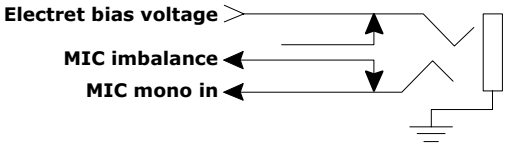

Power Supply Header

The power supply header on the system board connects to the power supply connector labelled P1.

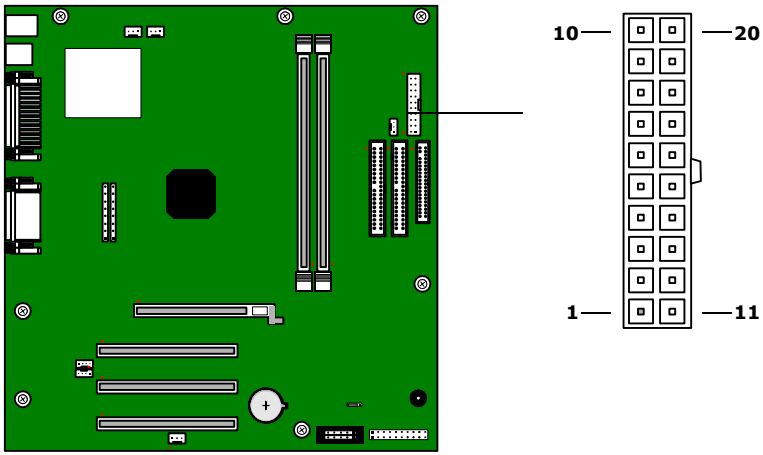

Fan Headers

The CPU-FAN and PWR-FAN headers are 1 x 3-pin straight headers. The CPU_FAN header connects to the CPU fan and controls the CPU cooling. The PWR-FAN header is a 1 x 3-pin straight header. The PWR-FAN connects to the power supply and controls the power supply cooling fan.

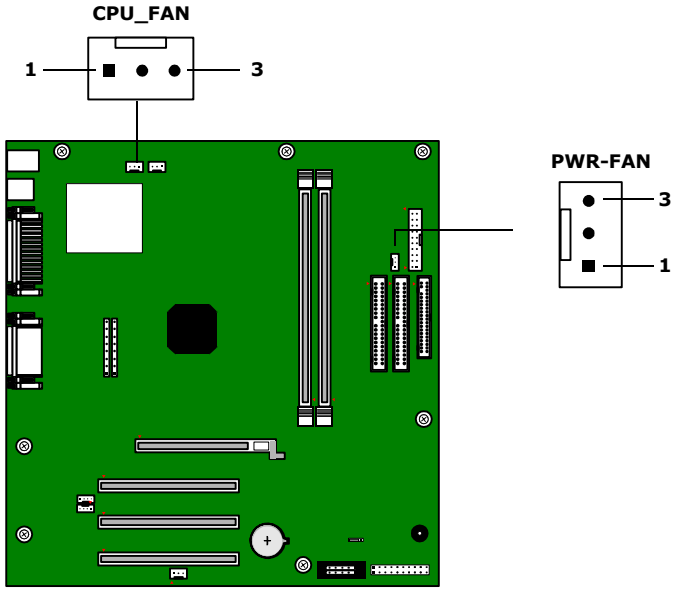

CPU_FAN header	
Pin	*Signal Name*
1	Ground
2	FAN_CTRL (+12V)
3	FAN_SEN

PWR-FAN header	
Pin	*Signal Name*
1	Ground
2	FAN_CTRL (+12V)
3	FAN_SEN

CD-In Header

The CD-In header on the system board is a 1 x 4-pin header that connects to the DVD-ROM drive.

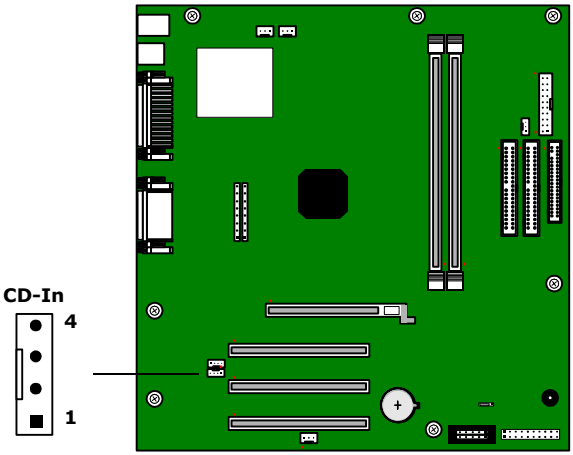

CD-In header

Pin	Signal Name
1	Left Line In
2	Ground
3	Ground
4	Right Line In

Wake On LAN (WOL-CON) Header

The Wake On LAN header (WOL-CON) on the system board is a 3-pin header. It is not used.

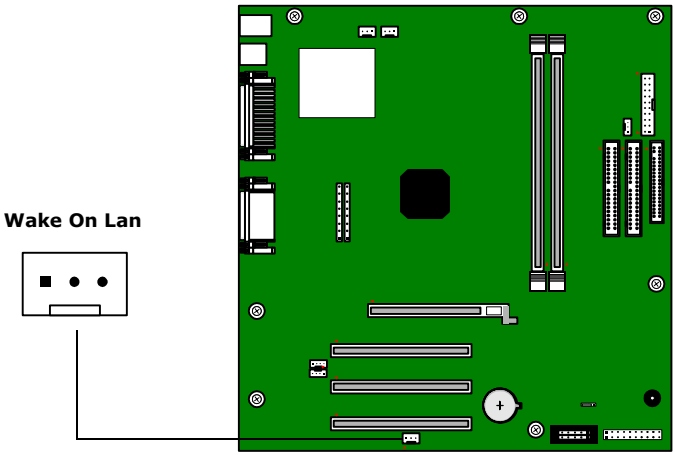

Wake On LAN header

Pin	*Signal Name*
1	+5Vsb
2	Ground
3	WOL signal

AUX Audio Header

The AUX Audio header is a 4 pin standard 2mm single line header that connects to the AUX Audio signal input (not used).

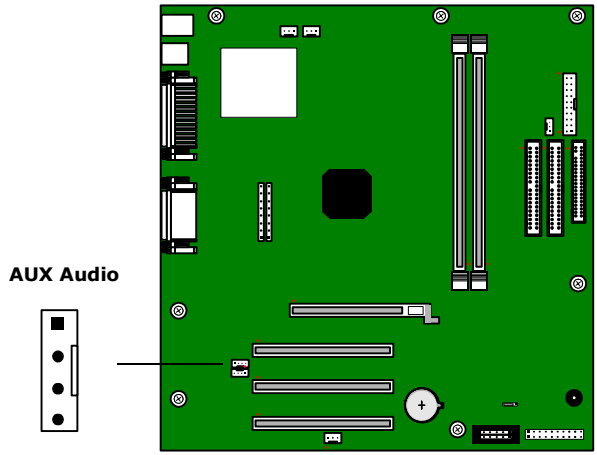

AUX Audio header

Pin	*Signal Name*
1	Left Line In
2	Ground
3	Ground
4	Right Line In

Configuration Jumper (CMOS CLR)

There is one user-configurable jumper for CMOS Clear.

The computer ships with CMOS Clear in the Normal position. Do not change the position of this jumper unless directed by a technical support person.

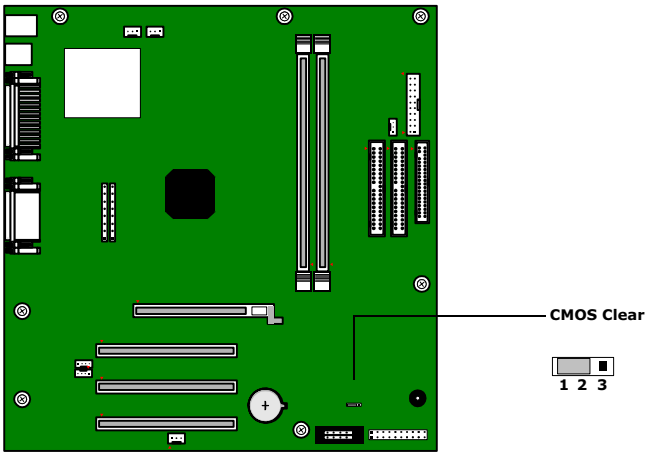

CMOS Clear Jumper settings

Jumper Plug Position	*Function*
1-2	Normal
2-3	Clear

The configuration jumpers should never need changing unless otherwise directed by a technical support or service technician.

Chapter 5
Fax/Modem Card

The fax/modem card occupies PCI slot No. 1. Your computer is either installed with a HomePNA modem or Lucent 1648 modem depending on the configuration you purchased.

To determine the modem installed on your computer, locate the RJ-11 jacks on the back of your system. If one RJ-11 jack exists, you have a HomePNA modem; if two RJ-11 jacks exist, you have a Lucent 1648 modem.

HomePNA Modem

The HomePNA standard uses frequency division multiplexing (FDM) to use the same phone line for voice and data transmission. This enables network access for any compatible HomePNA device that can be plugged into a phone jack (RJ-11) in your home.

The HomePNA modem installed in your VAIO computer has a single jack (RJ-11). If you want to use a single wall jack for your computer's Internet access and for a standard telephone, you can use an optional 1-to-2 jack adapter (splitter) in the telphone wall jack to accomodate both lines.

Refer to the *Home Networking Solutions: Using the HomePNA Modem with Sony VAIO Computers* documentation that accompanied your computer(s) and the installation instructions that accompanied the HomePNA device(s) for further information.

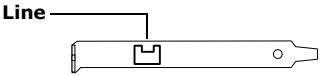

Connectors

Name	Connector Type	Description
Line	RJ-11	Connects to telephone line

Lucent 1648 Modem

There are two RJ-11 jacks: one to connect a telephone line, and one to connect a phone.

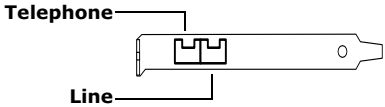

Connectors

Name	Connector Type	Description
Telephone	RJ-11	Connects to phone
Line	RJ-11	Connects to telephone line

Chapter 6
CMOS Setup Options

This chapter describes each screen in the Award BIOS Setup Utility (see "Accessing the BIOS Setup Utility" on page 18).

The Award BIOS setup has five menu items on the menu bar. These are:

- Main
- Advanced
- Power
- Boot
- Exit

Options that you can change are enclosed in brackets. Text that is not enclosed in brackets cannot be changed.

A small triangle (▸) indicates that there is a sub-menu with additional information and options. Press Enter to display the sub-menu. The information and options in a sub-menu are context-sensitive (they appear or disappear, depending on which options you select).

The item shown in [brackets] in this guide is the default option. The option shown in [brackets] on the screen is the option currently set for your system.

The other available options for each item are shown without brackets directly below the default option in this guide. The available options are listed in the order they occur when you press the + key.

Use the left and right arrow keys to choose a menu item. Use the up and down arrow keys to select an option. Press Enter to display a list of options, or press the + or - key to cycle through the other options.

If you display the list of options, use the up and down arrow keys to select an option in the list, then press Enter to choose the selection.

Press Esc to go back to the main menu.

Press F10 to save the changes and exit, or press Esc to discard the changes.

Follow the on-screen prompts for other choices. The bottom of the screen presents a summary of the keys to use for navigation and control.

Main Screen

System Time	[00:00:00]
System Date	[01/01/2001]

- Primary Master (see "IDE Sub-Menus" on page 76)
- Primary Slave (see "IDE Sub-Menus" on page 76)
- Secondary Master (see "IDE Sub-Menus" on page 76)
- Secondary Slave (see "IDE Sub-Menus" on page 76)

Supervisor Password	[Disabled]
User Password	[Disabled]
Installed Memory	128 MB
BIOS Revision	1002

▸IDE Sub-Menus

Type	[Auto] User Type HDD CD-ROM LS-120 ZIP-100 MO Other ATAPI Device None
Translation Method*	[LBA] Large Normal Match Partition Table Manual
Cylinders†	[1024]
Heads†	[255]
Sectors‡	[63]
CHS Capacity*	8422 MB
Maximum LBA Capacity*	30735 MB
Multi-Sector Transfers*	[Maximum] Disabled 2 Sectors 4 Sectors 8 Sectors 16 Sectors 32 Sectors
SMART Monitoring*	[Disabled] Enabled
PIO Mode**	[4]
ULTRA DMA Mode†	[5]
Set Device As††	[Auto] Floppy Hard Disk

* This option appears when Type is set to User Type HDD. Actual capacity depends on product.
† This option appears when Type is set to Auto or User Type HDD.
‡ This option appears when Type is set to Auto or User Type HDD.
** This option appears when Type is not set to None.
†† This option appears when Type is set to ZIP-100 or MO.

Advanced Screen

CPU Speed	1000 MHz (PCV-RX450) 1200 MHz (PCV-RX460)
▸ I/O Device Configuration	
Onboard AC97 Audio Controller	[Enabled] Disabled
Onboard 1394 Controller	[Enabled] Disabled
Onboard LAN Controller	[Enabled] Disabled
Onboard Serial Port 1	[3F8H/IRQ4] 2F8H/IRQ3 3E8H/IRQ4 2E8H/IRQ10 Disabled
Onboard Parallel Port	[378H/IRQ7] 278H/IRQ5 Disabled 3BCH/IRQ7
Parallel Port Mode	[Normal] EPP ECP ECP+EPP
▸ PCI Configuration	
Slot 1 IRQ to Slot 3 IRQ	[Auto] NA 3 4 5 7 9 10 11 12 14 15
Onboard LAN Boot ROM	[Disabled] Enabled

Power Screen

▸Power Up Control

AC Power Loss Restart	[Disabled] Enabled
Power Up On Modem Act	[Disabled] Enabled
Wake On LAN	[Disabled] Enabled

▸Hardware Monitor

MB Temperature	[(displays actual temperature)]
CPU Temperature	[(displays actual temperature)]
CPU Fan Speed	[(displays actual RPM)]
Power Fan Speed	[(displays actual RPM)]
VCORE Voltage	[(displays actual voltage)]
+3.3V Voltage	[(displays actual voltage)]
+5V Voltage	[(displays actual voltage)]
+12V Voltage	[(displays actual voltage)]
-12V Voltage	[(displays actual voltage)]

Boot Screen

1. ATAPI CD-ROM	[(displays installed drive)] Disabled
2. Removable Device	[Legacy Floppy] LS120 ZIP-100 ATAPI MO Disabled
3. IDE Hard Drive	[(displays installed drive)] Disabled
4. Other Boot Device	[Disabled] Network SCSI Boot Device
5. Silent Boot	[Enabled] Disabled

Exit Screen

Exit Saving Changes

Exit Discarding Changes

Load Setup Defaults

Discard Changes

Save Changes

Chapter 7
Miscellaneous Technical Information

This chapter contains information on the following subjects:

- User and Supervisor password
- Beep code error messages
- PCI configuration status and error messages
- DMA channel assignments
- IRQ assignments
- System I/O address map
- Memory map
- PCI configuration space map

About User and Supervisor Passwords

The system allows you to specify up to two passwords (a User password and a Supervisor password) in the CMOS Setup Utility. The User password is required; the Supervisor password is optional.

Access to the CMOS Setup Utility depends on which passwords were previously set, as indicated next.

If you set these passwords...	*...the following passwords are required:*
User password only	User password is required at bootup.
Supervisor password only	No password is required at bootup. Supervisor password is required by most setup options.
Both passwords	User password is required at bootup. Supervisor password is required by most setup options.

Beep Code Error Messages

During a normal bootup, a single short beep signifies that the system is OK. Other beep patterns signify errors. The number of beeps indicates the specific error that occurred.

The Sony Online Support technical representative will need to know how many beeps your system produces if there is an error, so be sure to count the number of beeps before calling for support.

PCI Configuration Status and Error Messages

The following is a list of status and error messages that may appear on your system from time to time.

Message	Meaning
Floppy Disk Controller Resource Conflict	The floppy disk controller has requested a resource that is already in use.
CMOS Checksum Error, CMOS Cleared	The CMOS data was reinitialized due to a CMOS checksum error.
CMOS Data Invalid, CMOS Cleared	Invalid entry in the CMOS.
Parallel Port Resource Conflict	The parallel port has requested a resource that is already in use.
PCI Error Log is Full	This message is displayed when more than 15 PCI conflict errors are detected. No additional PCI errors can be logged.
PCI I/O Port Conflict	Two devices requested the same resource, resulting in a conflict.
PCI IRQ Conflict	Two devices requested the same resource, resulting in a conflict.
PCI Memory Conflict	Two devices requested the same resource, resulting in a conflict.
Primary Boot Device Not Found	The designated primary boot device (hard disk drive, floppy disk drive, CD-ROM drive, or network drive) could not be found.
Primary IDE Controller Resource Conflict	The primary IDE controller has requested a resource that is already in use.
Primary Input Device Not Found	The designated primary input device (keyboard, mouse, or other, if input is redirected) could not be found.
Primary Output Device Not Found	The designated primary output device (display, serial port, or other, if input is redirected) could not be found.
Secondary IDE Controller Resource Conflict	The secondary IDE controller has requested a resource that is already in use.
Serial Port 1 Resource Conflict	Serial port 1 has requested a resource that is already in use.
Static Device Resource Conflict	A device has requested a resource that is already in use.
System Board Device Resource Conflict	A device has requested a resource that is already in use.

DMA Channel Assignments

This shows the factory default values. The Microsoft® Windows® Me operating system reassigns resources to best meet the needs of a particular configuration.

DMA Channel	Default Assignment
2	Standard floppy disk controller
4	Direct memory access controller

System I/O Address Map

Address Range (hex)	Description
0000h-000Fh	Direct memory access controller
0010h-001Fh	Motherboard resources
0020h-0021h	Programmable interrupt controller
0022h-002Dh	Motherboard resources
002Eh-002Fh	Motherboard resources
0030h-003Fh	Motherboard resources
0040h-0043h	System timer
0044h-005Fh	Motherboard resources
0060h-0060h	Standard 101/102-Key or Microsoft Natural Keyboard
0061h-0061h	System speaker
0062h-0063h	Motherboard resources
0064h-0064h	Standard 101/102-Key or Microsoft Natural Keyboard
0065h-006Fh	Motherboard resources
0070h-0073h	System CMOS/real time clock
0074h-007Fh	Motherboard resources
0080h-0090h	Direct memory access controller
0091h-0093h	Motherboard resources
0094h-009Fh	Direct memory access controller
00A0h-00A1h	Programmable interrupt controller
00A2h-00BFh	Motherboard resources
00C0h-00DFh	Direct memory access controller
00E0h-00EFh	Motherboard resources
00F0h-00FFh	Numeric data processor
0170h-0177h	Secondary IDE controller (dual fifo)
0170h-0177h	SiS 5513 Dual PCI IDE Controller
01F0h-01F7h	SiS 5513 Dual PCI IDE Controller
01F0h-01F7h	Primary IDE controller (dual fifo)
0290h-029Eh	Motherboard resources
0376h-0376h	SiS 5513 Dual PCI IDE Controller
0376h-0376h	Secondary IDE controller (dual fifo)
0378h-037Fh	Printer Port (LPT1)
03B0h-03BBh	SiS 730S

Address Range (hex)	Description
03C0h-03DFh	SiS 730S
03F0h-03F1h	Motherboard resources
03F2h-03F5h	Standard Floppy Disk Controller
03F6h-03F6h	SiS 5513 Dual PCI IDE Controller
03F6h-03F6h	Primary IDE controller (dual fifo)
03F7h-03F7h	Standard Floppy Disk Controller
03F8h-03FFh	Communications port (COM1)
0480h-048Fh	Motherboard resources
04D0h-04D1h	Motherboard resources
0CF8h-0CFFh	PCI bus
B000h-B0FFh	Realtek RTL8139 Family PCI Fast Ethernet NIC
B400h-B4FFh	Lucent WDM Communication Device*
B800h-B807h	Lucent WDM Communication Device*
B800h-B80Fh	BCM V.90 56K Modem†
C000h-CFFFh	SiS Accelerated Graphics Port
C800h-C87Fh	SiS 730S
D400h-D4FFh	Sis 7018 Audio Driver
D800h-D80Fh	SiS 5513 Dual PCI IDE Controller
D800h-D807h	Primary IDE controller (dual fifo)
D808h-D80Fh	Secondary IDE controller (dual fifo)
E400h-E47Fh	Motherboard resources
E480h-E4FFh	Motherboard resources

* For Lucent modem models only.

† For HPNA modem models only.

✍ I/O addresses that may be used by add-in cards are not listed.

Memory Map

Address range	Default configuration
00000000h-0009FFFFh	System board extension for ACPI BIOS
000A0000h-000AFFFFh	SiS 730S
000B0000h-000BFFFFh	SiS 730S
000C0000h-000CBFFFh	SiS 730S
000F0000h-000FFFFFh	System board extension for ACPI BIOS
00100000h-07FFFFFFh	System board extension for ACPI BIOS
E880000h-E8803FFFh	Texas Instruments OHCI Compliant IEEE1394 Host Controller
E9000000h-E90007FFh	Texas Instruments OHCI Compliant IEEE1394 Host Controller
E9800000h-E98000FFh	Realtek RTL8139 Family PCI Fast Ethernet NIC
E5000000h-E5000FFFh	BCM V.90 56K Modem*
E5800000h-E5800FFFh	BCM HPNA 10Mbps NIC*
EA000000h-EA0000FFh	Lucent WDM Communication Device†
EA800000h-EA81FFFFh	SiS 730S
EA800000h-EAFFFFFFh	SiS Accelerated Graphics Port
F0000000h-F7FFFFFFh	SiS 730S
F0000000h-FEBFFFFFh	SiS Accelerated Graphics Port
EB000000h-EB000FFFh	SiS 7018 Audio Driver
EB800000h-EB800FFFh	SiS 7001 PCI to USB Open Host Controller
EC000000h-EFFFFFFFh	PCI standard host CPU bridge
FEE00000h-FEE00FFFh	System board extension for ACPI BIOS
FFEE0000h-FFEFFFFFh	Motherboard resources
FFFE0000h-FFFFFFFFh	Motherboard resources

* For HPNA modem models only.

† For Lucent modem models only.

IRQ Settings

IRQ	Settings
00	System timer
01	Standard 101/102-Key or Microsoft Natural Keyboard
02	Programmable interrupt controller
03	BCM HPNA 10Mbps NIC*
03	Texas Instruments OHCI Compliant IEEE 1394 Host Controller
03	ACPI IRQ Holder for PCI IRQ Steering
03	BCM V.90 56K Modem*
03	Lucent WDM Communication Device†
04	Communications Port (COM1)
06	Standard Floppy Disk Controller
07	Printer Port (LPT1)
08	System CMOS/real time clock
09	SiS 7001 PCI to USB Open Host Controller
09	Realtek RTL8139 Family PCI Fast Ethernet NIC
09	ACPI IRQ Holder for PCI IRQ Steering
09	SCI IRQ used by ACPI bus
10	SiS 7018 Audio Driver
10	ACPI IRQ Holder for PCI IRQ Steering
11	SiS 730S
11	ACPI IRQ Holder for PCI IRQ Steering
12	PS/2 Compatible Mouse Port
13	Numeric data processor
14	Primary IDE controller (dual fifo)
14	SiS 5513 Dual PCI IDE Controller
15	Secondary IDE controller (dual fifo)
15	SiS 5513 Dual PCI IDE Controller

* For HPNA modem models only.

† For Lucent modem models only.

Chapter 8
Specifications

This chapter describes the technical specifications for the Sony PCV-RX450/PCV-RX460 computer.

Processor

PCV-RX460: 1.2 GHz* AMD Athlon™ processor (with 200 MHz FSB)
PCV-RX450: 1 GHz AMD Athlon™ processor (with 200 MHz FSB)

* GHz denotes microprocessor internal clock speed. Other factors may affect application performance.

Chipset

SiS 730S

PCI Bus

PCI Level 2.2, 33 MHz zero wait state

3 PCI slots (2 open)

AGP Bus

AGP interface specification, rev. 2.0 compliance (supports 2x/4x)

1 AGP slot (open)

DIMM Configurations

DIMM1*	DIMM2*
0, 8, 16, 32, 64, 128, 256	0, 8, 16, 32, 64, 128, 256

* The PCV-RX450/PCV-RX460 is shipped with 128 MB. SDRAM is expandable to 512 MB. Computer SDRAM is unbuffered DIMM, specification Rev. 1.0 or later. Supports SDRAM memory. Does not support EDO memory or buffered DIMM memory. Memory can be installed in either socket. Memory size can vary between sockets. DIMMs can be single- or double-sided. DIMMs must be 3.3 V unbuffered 4-clock, 64-bit or 72-bit 133 MHz SDRAM modules.

Memory Modules (DIMMs)

Installed memory	128 MB PC-133 SDRAM (133 MHz)
Maximum memory	512 MB (256 MB in each socket)
Voltage	3.3 V memory only
Pins	168-pins with gold-plated contacts
SDRAM type	PC-133, 60 ns, unrestricted CAS latency 2, unbuffered, Intel 4-clock, 64 bits (non-ECC)

DIMM size	Configuration
8 MB	1 Mb x 64
16 MB	2 Mb x 64
32 MB	4 Mb x 64
64 MB	8 Mb x 64
128 MB	16 Mb x 64
256 MB	32 Mb x 64

L2 Cache

Installed	256 KB

Graphics

Chipset	SiS 730S Gfx
Video memory	Shared with system memory (16 MB)
Resolution (displayed resolution depends on the video monitor you use)*	
True color (32 bits)	Up to 1600 x 1200 at 60 Hz non-interlaced
High color (16 bits)	Up to 1920 x 1440 at 60 Hz non-interlaced
256 colors (8 bits)	Up to 1920 x 1440 at 60 Hz non-interlaced

* The use of 1024 x 768 True color (24 bits) or High color (16 bits) at 75 Hz or lower refresh rate is recommended for video playback applications.

Audio

Sound chip	SiS 730S Audio Controller
Wave synthesis	64 voice polyphony wave table synthesis
Audio sampling rate	Up to 48 kHz at 16 bits
Rear panel connectors	MIC (for microphone) LINE IN (from stereo audio source) HEADPHONES (for stereo headphones)

Communications

Modem	V.90-compatible data/fax modem*
Fax	14.4 Kbps maximum
i.LINK® (IEEE1394)	400 Mbps, OHCI chipset
Ethernet	10Base-T/100Base-TX
HomePNA	10 Mbps/1 Mbps† HomePNA 2.0 compatible†

* Due to FCC limitations, the maximum permissible data speed is 53 Kbps during download transmissions. Actual data speeds may vary, depending on line conditions.

† For HPNA modem models only.

I/O and Expansion Slots

Serial ports	One high-speed NS16C550-compatible port
Parallel port	One high-speed bi-directional Centronics-compatible port with ECP and EPP modes
Modem ports	Two RJ-11 connectors (for line and phone)
USB ports	USB1 (on rear panel) USB2 and USB3 (on front panel)
PCI slots	Two available slots. Maximum length for add-in cards is 9.05 inches
AGP slot	One available slot. Maximum length for add-in cards is 9.05 inches
IDE headers	Primary and secondary (each supports two ATA-100 IDE drives)
i.LINK (IEEE1394) ports	One 4-pin connector on front panel One 6-pin connector on rear panel

Floppy Disk Drive and Controller

Drive	Description
Floppy disk controller	82077-compatible (supports up to 2.88 MB)
Floppy disk drive	3.5-inch, 1.44 MB.

Hard Drives and Controllers

Drive	Description
EIDE controller	Supports up to four EIDE drives (supports PIO Mode 4 EIDE drives and Ultra DMA/100 Mode drives)
IDE hard drive*	PCV-RX460: 60 GB ATA-100, (C = 16 GB, D = 44 GB) PCV-RX450: 40 GB ATA-100, (C = 16 GB, D = 24 GB)

* Bus-mastering EIDE driver installed.

Optical Drives

Drive	Description
DVD-ROM drive	
DVD-ROM read*	16X maximum performance
CD-R/CD-ROM read†	40X maximum performance
CD-RW read‡	32X maximum performance
CD-RW drive	
CD-RW read**	20X maximum performance
CD-RW write††	8X maximum performance
CD-R read‡‡	32X maximum performance
CD-R write***	12X maximum performance
CD-ROM read	32X maximum performance

* Data on a DVD-ROM is read at a variable transfer rate, ranging from 6.6X at the innermost track to 16X at the outermost track (the data transfer standard 1X rate is 1350 KBps). The average data transfer rate is 11.3X (15,255 KBps).

† Data on a CD-R/CD-ROM is read at a variable transfer rate, ranging from 17.5X at the innermost track to 40X at the outermost track (the data transfer standard 1X rate is 150 KBps). The average data transfer rate is 28.6X (4293 KBps).

‡ Data on a CD-RW is read at a variable transfer rate, ranging from 13X at the innermost track to 32X at the outermost track (the data transfer standard 1X rate is 150 KBps).The average data transfer rate is 22.5X (3375 KBps).

** Data on a CD-RW is read at a variable transfer rate, ranging from 8X at the innermost track to 20X at the outermost track (the data transfer standard 1X rate is 150 KBps). The average data transfer rate is 14X (2100 KBps).

†† The CD-RW writing speed may vary, depending on the media. The maximum CD-RW writing speed is 8X.

‡‡ Data on the CD-R/CD-ROM is read at a variable transfer rate, ranging from 13X at the innermost track to 32X at the outermost track (the data transfer standard 1X rate is 150 KBps). The average data transfer rate is 22.5X (3375 KBps).

*** The maximum CD-R writing speed is 12X (1X = 150 KBps).

System BIOS

Make and model	Award-based
ROM	2 MB flash-ROM
Passwords	User and supervisor passwords supported
Power management	APM 1.2
Advanced features	ACPI-1.0 compliant hardware for use with APM and PNP BIOS APIs
Plug and Play devices	Supported with steerable DMA channels and interrupts
Special features	PC-99 compliant, multi-boot, PCI add-in card auto-configure

Index

A

add-in card
  installing **26**
  removing **27**
address map, system **86**
AGP slot connector **52**
audio specifications **93**

B

battery - See lithium battery
beep codes **83**
BIOS setup utility **18**
  advanced screen **77**
  boot screen **79**
  exit screen **80**
  main screen **75**
  options **73**
  power screen **78**
  screens **73**
BIOS specifications **96**

C

card
  modem **71**
CD-In connector **65**
CD-RW drive
  location of **3**
  performance of discs **3**, **95**
CMOS - See BIOS
CMOS Clear configuration jumper **68**
codes, beeps **83**
COM1 port - See SERIAL connector
communications, specifications **93**
computer lithium battery **vii**
computer safety information **ii**
configuration jumper, CMOS Clear **68**
configuring
  BIOS setup utility **18**
  power management **19**
connectors
  4-pin on modem card **70**, **71**
  AGP **52**
  CD-In **65**
  fan **64**
  i.LINK **7**, **57**
  IDE **53**
  KEYBOARD **54**
  line **70**, **71**
  modem card **70**, **71**
  MONITOR **57**
  MOUSE **54**
  PCI **51**
  PRINTER **57**
  telephone **70**, **71**
  USB **7**, **55**
cover
  for slot **39**
  removing **24**
  replacing **25**
covering I/O slot **40**
CPU - See processor

D

DIMM - See memory module
display, power management **19**
disposal of lithium battery **vii**
DMA channel assignments **85**

drives
IDE connectors **53**
installing additional 3.5-inch drive **41**
DVD-ROM drive
performance of discs **3**, **95**

E

error messages
beep codes **83**
PCI configuration **84**
Ethernet connector **55**
expansion slots **15**
specifications for **93**
expansion slots - See slots

F

fan connectors **64**
CPU-FAN **64**
PWR-FAN **64**
fax card - See modem card
fax/modem - See communications
FCC Part 68 **vi**
floppy disk drive, connector **49**
front panel header **48**
front view **2**
buttons and switches **5**
connectors **6**, **7**
drives **3**
indicators **6**

G

graphics controller - See graphics
graphics specifications **92**

H

header - See front panel header
HEADPHONES connector **13**, **61**

I

i.LINK connector **7**, **14**, **57**
I/O
address map **86**
slot specifications **93**
I/O connectors
Ethernet **55**
HEADPHONES **13**, **61**
i.LINK **14**
KEYBOARD **11**
LINE **13**
LINE IN **13**, **61**
MIC **13**, **61**
MONITOR **12**
MOUSE **11**
PRINTER **12**
SERIAL **11**
TELEPHONE **13**
USB **11**, **55**
I/O slot covering **40**
icons, description of **9**
IDE connectors **53**
IEEE1394 - See i.LINK
installing
3.5-inch hard disk drive **41**
add-in card **26**
system memory **34**
interference **v**
IRQ settings **89**

K

KEYBOARD connector **11**, **54**

L

L2 cache specifications **92**
LINE IN connector **13**, **61**
lithium battery
disposal **vii**
replacing **31**
safety precautions **vii**

M

map - See I/O address map and memory map
memory - See system memory
memory module
connector **50**
removing **37**
specifications for **92**
messages
error **83**
status and error **84**
MIC connector **13**, **61**

microprocessor - See processor
model numbers **ii**
modem - See communications
modem card
    connectors **70**, **71**
    view of **70**, **71**
monitor - See display
MONITOR connector **12**, **57**
MOUSE connector **11**, **54**

N

notice to users **ii**

P

passwords, user and supervisor **82**
PCI slot connectors **51**
power management, configuring **19**
PRINTER connector **12**, **57**
processor, specifications for **91**

R

radio interference **v**
RAM - See system memory
rear view **8**
    I/O connectors **11**
    icons **9**
recording **ii**
regulatory information **v**
removing
    add-in card **27**
    cover **24**
    memory module **37**
    slot cover **39**
replacing cover **25**
replacing lithium battery **31**
resolution - See graphics

S

safety information **ii**
SERIAL connector **11**, **61**
serial numbers **ii**
serial port - See SERIAL
setup, BIOS **18**
slot - See I/O slot
slot cover, removing **39**
specifications
    AGP bus **91**
    audio **93**
    BIOS **96**
    chipset **91**
    communications **93**
    DIMM configurations **92**
    floppy disk drive and controller **94**
    graphics **92**
    hard drives and controllers **94**
    I/O and expansion slots **93**
    L2 cache **92**
    memory module **92**
    optical drives **95**
    PCI bus **91**
    processor **91**
    system BIOS **96**
status and error messages **84**
supervisor password **82**
system board
    AGP slot connector **52**
    CD-In connector **65**
    configuration jumper **68**
    fan connectors **64**
    floppy disk drive connector **49**
    front panel header **48**
    HEADPHONES connector **61**
    i.LINK connector **57**
    IDE connectors **53**
    KEYBOARD connector **54**
    LINE IN connector **61**
    memory module connector **50**
    MIC connector **61**
    MONITOR connector **57**
    MOUSE **54**
    PCI slot connectors **51**
    PRINTER connector **57**
    SERIAL connector **61**
    USB connectors **55**
system I/O address map **86**
system memory, installing **34**

T

TELEPHONE connector **13**
Telephone Consumer Protection Act of 1991 **vi**
TV interference **v**

U

USB connectors **7**, **11**, **55**
user password **82**