Interchangeable Lens Digital Camera
ILME-FX30

If your camera's system software (firmware) is Ver.2.00 or later, use Creators' App on your smartphone. Imaging Edge Mobile cannot be used. For details on Creators' App, refer to the following website.
https://www.sony.net/ca/

Recommended pages in the Help Guide

Finding functions from MENU

You can check the list of the menu items. You can also move to the explanation page for each item from the menu item on the list.

Log Shooting Setting

Configures the settings for Log shooting.

Using the Main menu (shooting setting list)

Select the (Main) tab on the menu screen to display a list of shooting settings.

Support information

Firmware, Questions & Answers and Compatibility

This website provides Firmware update, Question & Answers and Compatibility information

Basic Knowledge

Improve your shooting techniques by learning the basics of camera.

How to use the "Help Guide"

Before Use

Checking the camera and the supplied items

Memory cards that can be used

Notes on using your camera

Precautions

Lending, transferring or discarding the camera and/or memory card to others (Notes on protecting private information)
Notes on the battery pack and charging the battery
Notes on memory card
Cleaning the image sensor (Sensor Cleaning)
On cleaning

Names of parts

Front side
Rear side
Top side
Sides
Bottom
XLR handle unit (ILME-FX30 only)
Basic icons displayed on the monitor

Basic operations

Touch operations on the monitor
Using the control wheel
Using the multi-selector
Using the MODE (Mode) button
Using the menu
Using the home screen
Using the Main menu (shooting setting list)
Using the function menu
Using the custom buttons
Using the DISP (Display Setting) button
Using the Delete button
Using the front dial and rear dial
Using the keyboard
In-Camera Guide

Preparing the camera/Basic shooting operations

Charging the battery pack

- Inserting/removing the battery pack
- Charging the battery pack using the AC Adaptor (supplied in some countries/regions)
- Charging the battery with a commercially available AC adaptor or mobile battery
- Using the AC Adaptor/battery charger abroad

Supplying power from a wall outlet (wall socket)

Inserting/removing a memory card

Attaching/removing a lens

Attaching the supplied XLR handle unit (only with ILME-FX30)

Performing initial setup for the camera

Basic shooting operations

- Confirmation before shooting
- Shooting movies
- Shooting still images (Intelligent Auto)

Finding functions from MENU

Using the shooting functions

Contents of this chapter

Selecting a shooting mode

- Exposure Ctrl Type
- Auto/Manual Swt. Set.
- Movie: Exposure Mode
- S&Q Motion: Exposure Mode
- Intelligent Auto
- Program Auto
- Aperture Priority
- Shutter Priority
- Manual Exposure
- Shutter Mode
- Auto Slow Shutter

Focusing

- Selecting the focus method (Focus Mode)
- Selecting the focus area (Focus Area)
- Tracking subject (Tracking function)
- Manual Focus
- Direct manual focus (DMF)

Face/Eye AF

- Focusing on human eyes
- Face/Eye Prior. in AF (still image/movie)
- Face/Eye Subject (still image/movie)
- Subject Sel. Setting (still image/movie)
- Right/Left Eye Select (still image/movie)
- Face/Eye Frame Disp. (still image/movie)
- Face Memory
- Regist. Faces Priority (still image/movie)

Using focusing functions

- Focus Standard
- Adjusting the focus area settings to the camera's orientation (horizontal/vertical) (Switch V/H AF Area)
- Registering the current focus area (AF Area Registration)
- Deleting a registered AF Area (Del. Regist. AF Area)
- Focus Area Limit (still image/movie)
- Circ. of Focus Point (still image/movie)
- AF Frame Move Amt (still image/movie)
- Focus Area Color (still image/movie)
- AF Area Auto Clear
- Area Disp. dur Tracking
- AF-C Area Display
- Phase Detect. Area
- AF Tracking Sensitivity
- AF Transition Speed

- AF Subj. Shift Sensitivity
- AF Assist
- AF/MF Selector
- AF w/ Shutter
- AF On
- Focus Hold
- Pre-AF
- Priority Set in AF-S
- Priority Set in AF-C
- AF in Focus Mag.
- Auto Magnifier in MF
- Focus Magnifier
- Focus Magnif. Time (still image/movie)
- Initial Focus Mag. (movie)
- Initial Focus Mag. (still image)
- Focus Map
- Peaking Display

Adjusting the exposure/metering modes

- Exposure Comp. (still image/movie)
- Histogram display
- Exposure step (still image/movie)
- Exposure Std. Adjust (still image/movie)
- D-Range Optimizer (still image/movie)
- Metering Mode (still image/movie)
- Face Priority in Multi Metering (still image/movie)
- Spot Metering Point (still image/movie)
- ND Filter
- AE lock
- AEL w/ Shutter
- Zebra Display

Selecting the ISO sensitivity

- ISO (still image/movie)
- ISO Range Limit (still image/movie)
- ISO AUTO Min. SS

White balance

- White Balance (still image/movie)
- Capturing a standard white color to set the white balance (custom white balance)
- Priority Set in AWB (still image/movie)
- Shutter AWB Lock
- Shockless WB

Log shooting settings

- Log shooting
- Log Shooting Setting
- Select LUT
- Manage User LUTs
- Base ISO
- Base ISO Switch EI
- Exposure Index
- Display LUT

Adding effects to images

- Creative Look (still image/movie)
- Picture Profile (still image/movie)

Shooting with drive modes (self-timer/bracket)

- Drive Mode
- Self-timer(Single)
- Single Bracket
- Indicator during bracket shooting
- WB bracket
- DRO Bracket
- Bracket Settings

Interval Shoot Func.

Setting the image quality and recording format

- JPEG/HEIF Switch
- Image Quality Settings: File Format (still image)
- Image Quality Settings: JPEG Quality/HEIF Quality
- Image Quality Settings: JPEG Image Size/HEIF Image Size
- Aspect Ratio
- HLG Still Image
- Color Space
- File Format (movie)
- Movie Settings (movie)
- S&Q Mode Settings
- S&Q Settings
- FPS
- Proxy Settings
- Angle of view

Using touch functions

- Touch Operation
- Swipe Up
- Touch Func. in Shooting
- Focusing using touch operations (Touch Focus)
- Starting tracking with touch operations (Touch Tracking)
- Shooting with touch operations (Touch Shutter)

Shutter settings

- Silent Mode (still image/movie)
- Release w/o Lens (still image/movie)
- Release w/o Card
- Anti-flicker Set.

Using the zoom

- The zoom features available with this product
- Clear Image Zoom/Digital Zoom
- Zoom Range (still image/movie)
- Zoom Lever Speed (still image/movie)
- Custom Key Z. Speed (still image/movie)
- Remote Zoom Speed (still image/movie)
- About zoom scale
- Zoom Ring Rotate

Reducing blur

- SteadyShot (still image)
- SteadyShot (movie)
- SteadyShot Adjust. (still image/movie)
- SteadyShot focal length (still image/movie)

Lens Compensation (still image/movie)

Noise reduction

- High ISO NR

Setting the monitor display during shooting

- Auto Review (still image)
- Remain Shoot Display (still image)
- Grid Line Display (still image/movie)
- Grid Line Type (still image/movie)
- Live View Display Set.
- Aperture Preview
- Shot. Result Preview
- Bright Monitoring
- Emphasized REC Display
- Marker Display
- Gamma Display Assist
- Gamma Disp. Assist Typ.
- De-Squeeze Display

Recording movie audio

- Audio Recording
- Audio Rec Level
- Audio Out Timing
- Wind Noise Reduct.
- Shoe Audio Set.
- Recording audio using the XLR adaptor of the supplied handle (only with the ILME-FX30)

TC/UB settings

- TC/UB
- TC/UB Disp. Setting
- Matching the time code with other devices

Outputting RAW movies to an external RAW recorder

Framing shooting using remote shooting (Framing Settings)

Livestreaming video and audio

- Network Streaming (movie)
- USB Streaming (movie)

Customizing the camera

Contents of this chapter

Customization features of the camera

Assigning frequently used functions to buttons and dials (Custom Key/Dial Set.)

Changing the function of the dial temporarily (My Dial Settings)

Registering and recalling camera settings

- Camera Set. Memory
- Recall Camera Setting
- Memory/Recall Media
- Registering shooting settings to a custom key (Reg. Custom Shoot Set)

Registering frequently used functions to the function menu

- Fn Menu Settings

Registering frequently used functions to My Menu

Add Item
Sort Item
Delete Item
Delete Page
Delete All
Display From My Menu

Separately adjusting the camera settings for still images and movies

Different Set for Still/Mv

Customizing the functions of the ring/dial

Av/Tv Rotate
Lock Operation Parts

Recording movies by pressing the shutter button

REC w/ Shutter (movie)

Monitor settings

Monitor Flip Direction
DISP (Screen Disp) Set
Home (Lower Left)

Viewing

Contents of this chapter

Viewing images

Selecting which memory card to play back (Select Playback Media)
Playing back still images
Enlarging an image being played back (Enlarge Image)
Enlarge Initial Mag.
Enlarge Initial Position
Rotating recorded images automatically (Display Rotation)
Playing back movies
Volume Settings
4ch Audio Monitoring (movie)

Playing back images using slideshow (Slide Show)
Cont. Play for Interval
Play Speed for Interval

Changing how images are displayed

Playing back images on the image index screen (Image Index)
Switching between still images and movies (View Mode)
Display as Group
Focus Frame Display (playback)
Disp Specified Time Img.

Setting the method for jumping between images (Image Jump Setting)

Protecting recorded images (Protect)

Adding information to images

Rating
Rating Set(Custom Key)
Clip Flag
Rotating an image (Rotate)

Extracting still images from a movie

Photo Capture
JPEG/HEIF Switch (Photo Capture)

Copying images from one memory card to another (Copy)

Deleting images

Deleting multiple selected images (Delete)
Delete pressing twice
Delete confirm.

Viewing images on a TV

Viewing images on a TV using an HDMI cable

Changing the camera settings

Memory card settings

Format

- Rec. Media Settings (still image/movie): Recording Media (still image)
- Rec. Media Settings (still image/movie): Recording Media (movie)
- Rec. Media Settings (still image/movie): Auto Switch Media
- Recover Image DB (still image/movie)
- Display Media Info. (still image/movie)

File settings

- File/Folder Settings
- Select REC Folder
- Create New Folder
- File Settings
- Display File Name (movie)
- IPTC Information
- Copyright Info
- Write Serial Number (still image/movie)

Network settings

- Wi-Fi Connect
- WPS Push
- Access Point Set.
- Wi-Fi Frequency Band (models supporting 5 GHz)
- Display Wi-Fi Info.
- SSID/PW Reset
- Bluetooth Settings
- Bluetooth Rmt Ctrl
- Wired LAN (USB-LAN)
- USB-LAN/Tethering
- Airplane Mode
- Edit Device Name
- Importing root certification to the camera (Import Root Certificate)
- Access Authen. Settings
- Access Authen. Info

- Security(IPsec)
- Wi-Fi Direct Settings
- Reset Network Set.
- FTP Transfer Func.

Monitor settings

- Monitor Brightness

Power settings

- Power Save Start Time
- Auto Power OFF Temp.
- Fan Control (movie)
- Display Quality

USB settings

- USB Connection Mode
- USB LUN Setting
- USB Power Supply

External output settings

- HDMI Resolution
- HDMI Output Settings (movie)
- HDMI Info. Display
- CTRL FOR HDMI

General settings

- Language
- Area/Date/Time Setting
- NTSC/PAL Selector
- Audio signals
- REC Lamp
- Video Light Mode
- Pixel Mapping
- Version
- Display Serial Number

Privacy Notice
Screen Reader (For some models only)
Save/Load Settings
Setting Reset

Functions available with a smartphone

Functions available with a smartphone (Creators' App)
C3 Portal
Monitor & Control
Pairing the camera with a smartphone (Smartphone Connection)
Using a smartphone as a remote commander
Using a smartphone as a remote commander
Remote Shoot Setting
Transferring images to a Smartphone
Select on Cam & Send (transferring to a smartphone)
Reset Transfer Status (transferring to a smartphone)
Connecting while the camera is turned OFF
Cnct. while Power OFF (smartphone)
Reading location information from a smartphone

Using a computer

Recommended computer environment
Connecting/disconnecting the camera and a computer
Connecting the camera to a computer
Disconnecting the camera from the computer
Managing and editing images on a computer
Introduction to computer software (Imaging Edge Desktop/Catalyst)
Importing images to the computer
Operating the camera from a computer
Operating the camera from a computer (Remote Shoot Function)
Remote Shoot Setting

USB Streaming (movie)

Using the cloud service

Creators' Cloud

Creating an account for Creators' Cloud and linking your camera to the account (Cloud Connection)

Displaying cloud connection information (Cloud Information)

Notes on using the cloud service (Creators' Cloud)

Appendix

Audio accessories compatible with the Multi Interface Shoe

Mount Adaptor

- Mount Adaptor
- LA-EA3/LA-EA5 Mount Adaptor
- LA-EA4 Mount Adaptor

Multi Battery Adaptor Kit

Battery life and number of recordable images

Number of recordable images

Recordable movie times

List of icons on the monitor

- List of icons on the screen for shooting movies
- List of icons on the screen for shooting still images
- List of icons on the playback screen

List of default setting values

Specifications

Trademarks

License

If you have problems

Troubleshooting

Warning messages

5-043-036-16(1) Copyright 2022 Sony Corporation

Interchangeable Lens Digital Camera
ILME-FX30

How to use the “Help Guide”

The “Help Guide” is a “Web Instruction Manual” that has been designed to describe the functions and operating methods of this camera. Use the “Help Guide” to search for any information that you require in order to make full use of the camera.
(The “Help Guide” screens shown on this page are for reference only. They may differ from the actual on-screen display of your model.)

Hint

- The “Startup Guide” supplied with the camera describes basic operating methods and precautions for use. Please refer to the “Startup Guide” in combination with this “Help Guide.”

Icons used in the “Help Guide”

: Menu items displayed in the still image shooting modes
: Menu items displayed in the movie recording modes and slow-motion/quick-motion shooting modes
: Menu items displayed in any of the still image shooting modes, movie recording modes, or slow-motion/quick-motion shooting modes
For details on each shooting mode, refer to “Using the menu.”

Finding your desired information

Method A: Searching by keyword
Enter a search keyword (“white balance,” “focus area,” etc.), and use the search results to display the description page that you want to view. If you enter two or more keywords by separating them with spaces (blanks), you can search for pages that contain all of those keywords.

Method B: Viewing the table of contents
Select a heading from the table of contents to display the description page.

Screen displayed on a computer

Screen displayed on a smartphone

Method C: Finding functions from MENU

If you want to search for information while checking it against the MENU screen of the camera, use the "Finding functions from MENU" page. Select a MENU item from the list to go directly to the description page.

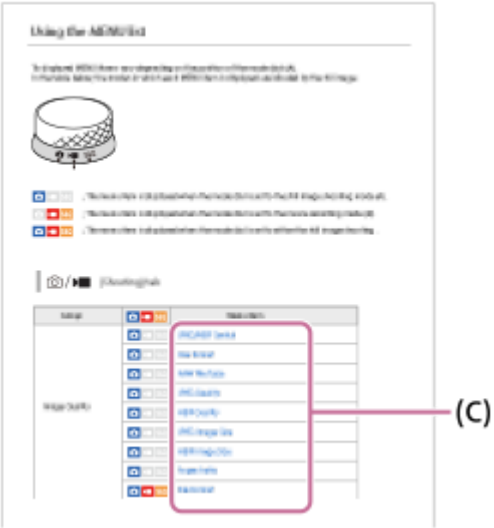

Viewing information about related features

"Related Topic" at the bottom of each page lists sections that contain information related to the description page currently being displayed. For a deeper understanding of the currently displayed page, refer to the listed sections as well.

Printing all the pages of the "Help Guide"

To print all the pages, select the [Printable PDF] button in the upper right corner of the top page. When the PDF file appears, use the printing menu of the browser to print it out.
This function is not available for certain languages.

Printing only the currently displayed page (only on a computer)

To print only the page currently being displayed, select the [Print] button at the top of the page. When the printing screen appears, specify your printer.

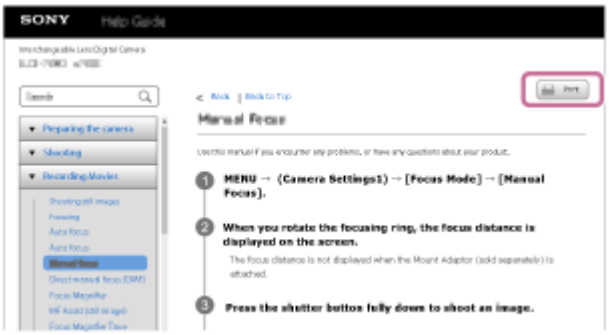

5-043-036-16(1) Copyright 2022 Sony Corporation

Interchangeable Lens Digital Camera
ILME-FX30

Checking the camera and the supplied items

The number in parentheses indicates the number of pieces.

This Help Guide covers models with different supplied items. The differences in supplied items are as follows.

Model name	XLR handle unit/Handle shoe cap
ILME-FX30	Supplied
ILME-FX30B	Not supplied

- Camera (1)
- AC Adaptor (1) (supplied in some countries/regions)
  The type of the AC Adaptor may differ depending on the country/region.

- Power cord (mains lead) (1)* (supplied in some countries/regions)

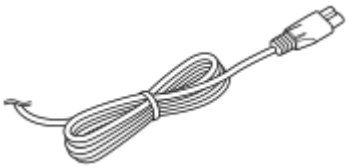

* Multiple power cords may be supplied with your camera. Use the appropriate one that matches your country/region.

- NP-FZ100 Rechargeable Battery Pack (1)

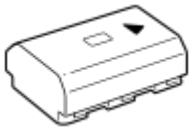

- USB Type-C® cable (1)

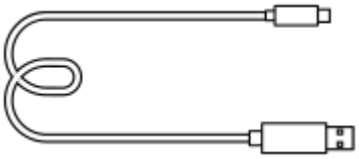

- Body Cap (1) (Attached to the camera)

- Shoe Cap (1) (Attached to the camera)

- XLR handle unit (1) (ILME-FX30 only)

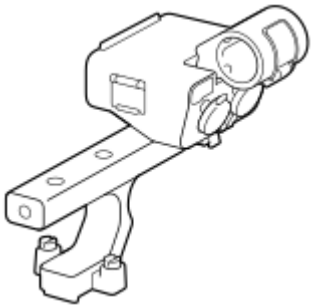

- Handle shoe cap (1) (attached to the handle) (ILME-FX30 only)

- Startup Guide (1)
- Reference Guide (1)

Note

- Accessories may differ depending on the country or region. Please check the Startup Guide for details on accessories.

5-043-036-16(1) Copyright 2022 Sony Corporation

Memory cards that can be used

This camera supports CFexpress Type A memory cards and SD memory cards (UHS-I, UHS-II compatible).
When using microSD memory cards with this camera, be sure to use the appropriate adaptor.

For still-image shooting

The following memory cards can be used.

- CFexpress Type A memory cards
- SD/SDHC/SDXC memory cards

For movie recording

Movie recording formats and compatible memory cards are as follows.

File Format	Maximum recordable bit rate	Supported memory card
XAVC HS 4K	280Mbps	• CFexpress Type A memory card (VPG200 or higher) • SDXC V60 or higher*1
XAVC S 4K	280Mbps	• CFexpress Type A memory card (VPG200 or higher) • SDXC V60 or higher*1
XAVC S HD	100Mbps	• CFexpress Type A memory card • SDHC/SDXC card (U3 or higher)*1
XAVC S-I 4K	600Mbps	• CFexpress Type A memory card (VPG200 or higher) • SDXC V90 or higher
XAVC S-I HD	222Mbps	• CFexpress Type A memory card (VPG200 or higher) • SDXC V90 or higher
XAVC S-I DCI 4K*2	600Mbps	• CFexpress Type A memory card (VPG200 or higher) • SDXC V90 or higher

*1 When the recording bit rate is 60 Mbps or lower, you can also record to an SDHC/SDXC card (Class 10).
*2 When the camera's system software (firmware) version is Ver.2.00 or later

For S&Q Motion shooting

File formats and compatible memory cards are as follows.
In slow-motion recording, the recording bit rate is higher than usual. You may need a memory card that can be written at a higher speed.

File Format	Maximum recordable bit rate	Supported memory card
XAVC HS 4K	500Mbps	• CFexpress Type A memory card (VPG200 or higher) • SDXC V60 or higher*1
XAVC S 4K	560Mbps	• CFexpress Type A memory card (VPG200 or higher) • SDXC V60 or higher*1
XAVC S HD	500Mbps	• CFexpress Type A memory card (VPG200 or higher) • SDXC V60 or higher*2
XAVC S-I 4K	1200Mbps	• CFexpress Type A memory card (VPG200 or higher) • SDXC V90 or higher*3
XAVC S-I HD	890Mbps	• CFexpress Type A memory card (VPG200 or higher) • SDXC V90 or higher*4
XAVC S-I DCI 4K*5	600Mbps	• CFexpress Type A memory card (VPG200 or higher) • SDXC V90 or higher*3

*1 When [S&Q Frame Rate] is set to [120fps]/[100fps], you may need an SDXC V90 memory card.
*2 When [S&Q Frame Rate] is set to [240fps]/[200fps], you may need an SDXC V90 memory card.
*3 For slow-motion recording, a CFexpress Type A memory card (VPG200 or higher) is required.
*4 When [S&Q Frame Rate] is set to [240fps]/[200fps], a CFexpress Type A memory card (VPG200 or higher) is required.
*5 When the camera's system software (firmware) version is Ver.2.00 or later

Hint

- When the recording bit-rate is 200 Mbps, you can also record using an SDXC card (U3/V30).

Note

- When shooting a proxy movie, a higher-speed memory card may be required.
- CFexpress Type B memory cards cannot be used.
- When an SDHC memory card is used to record an XAVC S movie over extended periods of time, the recorded movies will be divided into files 4 GB in size.
- When recording a movie on memory cards in both the Slot 1 and the Slot 2, insert two memory cards with the same file system. Movies cannot be recorded simultaneously when using a combination of the exFAT file system and FAT32 file system.

Memory card	File system
CFexpress Type A memory card, SDXC memory card	exFAT
SDHC memory card	FAT32

- Charge the battery pack sufficiently before attempting to recover the database files on the memory card.
- If the marks below appear on the memory card icon when shooting, use another memory card:
  : Indicates that the number of times the memory card can be rewritten is close to the upper limit.
  : Indicates that the number of rewrites on the memory card has reached the upper limit.

Related Topic

- Notes on memory card
- Number of recordable images
- Recordable movie times
- S&Q Settings

5-043-036-16(1) Copyright 2022 Sony Corporation

Precautions

Refer also to “Notes on use” in the Startup Guide (supplied) for this product.

On the data specifications described in this manual

- The data on performance and specifications in this manual are based on an ordinary ambient temperature of 25ºC (77°F), except where otherwise indicated.
- For the battery pack, the data are based on a battery pack that was fully charged until the charge lamp turned off.

On operating temperatures

- Shooting in extremely cold or hot environments that exceed the operating temperature range is not recommended.
- Under high ambient temperatures, the temperature of the camera rises quickly.
- When the temperature of the camera rises, the image quality may deteriorate. It is recommended that you wait until the temperature of the camera drops before continuing to shoot.
- Depending on the camera and battery temperature, the camera may become unable to record movies or the power may turn off automatically to protect the camera. A message will be displayed on the screen before the power turns off or you can no longer record movies. In this case, leave the power off and wait until the camera and battery temperature goes down. If you turn on the power without letting the camera and battery cool sufficiently, the power may turn off again, or you may still be unable to record movies.

Notes on recording for long periods of time or recording 4K movies

Especially during 4K shooting, the recording time may be shorter under low temperature conditions. Warm up the battery pack or replace it with a new battery.

Notes on playing movies on other devices

XAVC HS and XAVC S movies can only be played back on compatible devices.

Notes on recording/playback

- Before you start recording, make a trial recording to make sure that the camera is working correctly.
- Playback of images recorded with your product on other equipment and playback of images recorded or edited with other equipment on your product are not guaranteed.
- Sony can provide no guarantees in the event of failure to record, or loss of or damage to recorded images or audio data, due to a malfunction of the camera or recording media, etc. We recommend backing up important data.
- Once you format the memory card, all the data recorded on the memory card will be deleted and cannot be restored. Before formatting, copy the data to a computer or other device.
- Attach the shoulder strap to the camera to prevent it from falling.
- When using this product with a tripod or grip, be sure to attach the camera securely.

Notes on using a tripod

Use a tripod with a screw less than 5.5 mm (7/32 inches) long. Otherwise, you cannot firmly secure the camera, and damage to the camera may occur.

Notes on handling memory cards

The temperature of memory cards may rise after saving. This is not a malfunction.

Backing up memory cards

Data may be corrupted in the following cases. Be sure to back up the data for protection.

- When the memory card is removed, the USB cable is disconnected, or the product is turned off in the middle of a read or write operation.
- When the memory card is used in locations subject to static electricity or electrical noise.

Database file error

- If you insert a memory card that does not contain an image database file into the product and turn on the power, the product automatically creates an image database file using some of the memory card's capacity. The process may take a long time and you cannot operate the product until the process is completed.
- If a database file error occurs, export all images to your computer, and then format the memory card using this product.

Do not use/store the product in the following places

- In an extremely hot, cold or humid place
  In places such as in a car parked in the sun, the camera body may become deformed and this may cause a malfunction.
- Storing under direct sunlight or near a heater
  The camera body may become discolored or deformed, and this may cause a malfunction.
- In a location subject to rocking vibration
  It may cause malfunctions and an inability to record data. In addition, the recording media may become unusable, and recorded data may be corrupted.
- Near strong magnetic place
- In sandy or dusty places
  Be careful not to let sand or dust get into the product. This may cause the product to malfunction, and in some cases this malfunction cannot be repaired.
- In places with high humidity
  This may cause the lens to mold.
- In areas where strong radio waves or radiation are being emitted
  Recording and playback may not function correctly.

On moisture condensation

- If the product is brought directly from a cold to a warm location, moisture may condense inside or outside the product. This moisture condensation may cause a malfunction of the product.
- To prevent moisture condensation when you bring the product directly from a cold to a warm location, first put it in a plastic bag and seal it to prevent air from entering. Wait for about an hour until the temperature of the product has reached the ambient temperature.
- If moisture condensation occurs, turn off the product and wait about an hour for the moisture to evaporate. Note that if you attempt to shoot with moisture remaining inside the lens, you will be unable to record clear images.

Precaution on carrying

- Do not hold, hit, or apply excessive force to the following parts, if your camera is equipped with them:
  - The lens part
  - The movable monitor part
  - The movable flash part
  - The movable viewfinder part
- Do not carry the camera with the tripod attached. This may cause the tripod socket hole to break.
- Do not sit down in a chair or other place with the camera in the back pocket of your trousers or skirt, as this may cause malfunction or damage the camera.

Notes on handling the product

- Before you connect the cable to the terminal, be sure to check the orientation of the terminal. Then, insert the cable straight. Do not insert or remove the cable forcefully. This may cause the terminal part to break.
- The camera uses magnetic parts including magnets. Do not bring objects affected by magnetism, including credit cards and floppy disks, close to the camera.
- The recorded image may be different from the image you monitored before recording.

On storing

- For lens-integrated cameras
  Always attach the lens cap when you are not using the camera. (Only for models supplied with a lens cap)
- For interchangeable-lens cameras
  Always attach the lens front cap or body cap when you are not using the camera. To prevent dust or debris from getting inside the camera, remove dust from the body cap before attaching it to the camera.
- If the camera is dirty after use, clean it. Water, sand, dust, salt, etc. left in the camera may cause a malfunction.

Notes on using lenses

- When using the power zoom lens, be careful not to get your fingers or any other objects caught in the lens. (Only for models with a power zoom feature or interchangeable lens cameras)
- If you must place the camera under a light source such as sunlight, attach the lens cap to the camera. (Only for models supplied with a lens cap or interchangeable lens cameras)
- If sunlight or a strong light source enters the camera through the lens, it may focus inside the camera and cause smoke or fire. Attach the lens cap to the lens when storing the camera. When you shoot with backlighting, keep the sun sufficiently far away from the angle of view. Note that smoke or fire may occur even if the light source is slightly away from the angle of view.
- Do not directly expose the lens to beams such as laser beams. These may damage the image sensor and cause the camera to malfunction.
- If the subject is too close, the image may show any dust or fingerprints on the lens. Wipe the lens with a soft cloth, etc.

Notes on the flash (Only for models with a flash)

- Keep your fingers away from the flash. The light-emitting part may get hot.
- Remove any dirt from the surface of the flash. Dirt on the surface of the flash may emit smoke or burn due to heat generated by the emission of light. If there is dirt/dust, clean it off with a soft cloth.
- Restore the flash to its original position after using it. Make sure that the flash portion is not sticking up. (Only for models with a movable flash)

Notes on the Multi Interface Shoe (Only for models with a Multi Interface Shoe)

- When attaching or detaching accessories such as an external flash to the Multi Interface Shoe, first turn the power to OFF. When attaching the accessory, confirm that it is firmly fastened to the camera.
- Do not use the Multi Interface Shoe with a commercially available flash that applies voltages of 250 V or more or has the opposite polarity of the camera. It may cause a malfunction.

Notes on the viewfinder and flash (Only for models with a viewfinder or a flash)

- Take care that your finger is not in the way when pushing the viewfinder or flash down. (Only for models with a movable viewfinder or a movable flash)
- If water, dust or sand adheres to the viewfinder or flash unit, it may cause a malfunction. (Only for models with a movable viewfinder or a movable flash)

Notes on the viewfinder (Only for models with a viewfinder)

- When shooting with the viewfinder, you may experience symptoms such as eyestrain, fatigue, travel sickness, or nausea. We recommend that you take a break at regular intervals when you are shooting with the viewfinder.
  In case you may feel uncomfortable, refrain from using the viewfinder until your condition recovers, and consult your doctor if necessary.

- Although the viewfinder is built with high-precision technology for 99.99% or more effective pixels, black dots may appear, and white, red, blue, and green dots may not disappear. This is not a malfunction. These dots are not recorded.
- Do not forcibly push down the viewfinder when the eyepiece is pulled out. It may cause a malfunction. (Only for models with a movable viewfinder and an eyepiece that can be pulled out)
- If you pan the camera while looking into the viewfinder or move your eyes around, the image in the viewfinder may be distorted or the color of the image may change. This is a characteristic of the lens or display device and is not a malfunction. When you shoot an image, we recommend that you look at the center area of the viewfinder.
- The image may be slightly distorted near the corners of the viewfinder. This is not a malfunction. When you want to see the full composition with all its details, you can also use the monitor.
- If you use the camera in a cold location, the image may have a trailing appearance. This is not a malfunction.
- Do not directly expose the viewfinder to beams such as laser beams. These may damage the inside of the viewfinder and cause the camera to malfunction.

Notes on the monitor

- Although the monitor is built with high-precision technology for 99.99% or more effective pixels, black dots may appear, and white, red, blue, and green dots may not disappear. This is not a malfunction. These dots are not recorded.
- Do not press against the monitor. The monitor may be discolored and that may cause a malfunction.
- If the monitor has drops of water or other liquids on it, wipe it with a soft cloth. If the monitor stays wet, the surface of the monitor may change or deteriorate. This may cause a malfunction.
- If you use the camera in a cold location, the image may have a trailing appearance. This is not a malfunction.
- When you connect cables to the terminals on the camera, the rotating range of the monitor may become limited.

Notes on the image sensor

If you point the camera at an extremely strong light source while shooting images with a low ISO sensitivity, highlighted areas in the images may be recorded as black areas.

Notes on the cooling fan

- Do not cover the air vent.
- The air vent may get hot.
- Do not use the camera in areas where there are dust or sand particles in the air.
- If the cooling fan emits abnormal noises, stop using the camera and contact a service facility.

Notes on the XLR handle unit (supplied) (Only for models supplied with the XLR handle unit)

- Before connecting/disconnecting an external microphone or device to/from the INPUT1 or INPUT2 jack, be sure to set the INPUT1 (LINE/MIC/MIC+48V) or INPUT2 (LINE/MIC/MIC+48V) switch to a position other than “MIC+48V.” Plugging/unplugging the cable into/from the external microphone or device while the switch is set to “MIC+48V” may cause loud noise or a malfunction of the device.
- While recording is in progress, operating and handling noises from the camera or lens may be recorded. Touching the handle while recording is in progress will cause noise to be included in the recording.
- While recording is in progress, do not change the INPUT1 or INPUT2 switch settings.
- If the microphone of the handle is in proximity to a speaker, acoustic feedback may occur. In this case, move the handle away from the speaker to allow the maximum distance between the microphone and the speaker, or lower the speaker volume.
- If dust or water droplets are present on the surface of the microphone, successful recording may not be possible. Be sure to clean the microphone surface before using the handle.
- Turn off the camera before attaching/removing the handle.
- When the handle is connected to the camera and the HANDLE AUDIO ON/OFF switch is set to ON, the internal microphone of the camera cannot record audio input.
- When attaching the handle to the camera, fasten the two handle-attachment screws securely. Using the handle without fastening the handle-attachment screws may damage the Multi Interface Shoe terminal or cause the handle to fall off.

On image data compatibility

This product conforms with DCF (Design rule for Camera File system) universal standard established by JEITA (Japan Electronics and Information Technology Industries Association).

Services and software provided by other companies

Network services, content, and the [operating system and] software of this Product may be subject to individual terms and conditions and changed, interrupted or discontinued at any time and may require fees, registration and credit card information.

Notes on connecting to the internet

- When connecting to a wireless LAN network, this camera cannot connect to an access point that only uses WEP or WPA, which are security methods with potential vulnerabilities.
- This camera is not a network device (e.g., a router or switching hub). We strongly recommend connecting this camera to a network that can be properly configured and managed to protect against network-based attacks such as DoS (Denial of Service) attacks.
- When connecting this camera to a network, connect it via a properly configured and managed router or connect it to a LAN port with the same functionality as such a router. If you do not connect it in this way (for example, if you connect it to a free Wi-Fi network), security issues may occur. Properly configuring the router will provide sufficient protection against DoS attacks or loss of functionality of devices in the network. If you notice any abnormality, immediately disconnect the camera from the network.

Notes on security

- If you set [Security] to [None] in the camera's wireless LAN settings and connect the camera to an access point, wireless communications between the camera and the access point will not be encrypted, and third parties within the signal range may be able to intercept the content of the communications. Use WPA3 or WPA2, which are more secure security methods.
- SONY WILL NOT BE HELD LIABLE FOR DAMAGES OF ANY KIND RESULTING FROM FAILURE TO IMPLEMENT PROPER SECURITY MEASURES ON TRANSMISSION DEVICES, UNAVOIDABLE DATA LEAKS CAUSED BY TRANSMISSION SPECIFICATIONS, OR OTHER SECURITY PROBLEMS.
- Depending on the usage environment, unauthorized third parties on the network may be able to access the product. When connecting the camera to a network, be sure to confirm that the network is protected securely.

Notes on the FTP function

FTP does not encrypt content, usernames, or passwords. To ensure secure transfers, use FTPES (FTPS).

About the FTPES (FTPS) function

The FTPES (FTPS) function supports various encryption algorithms to ensure secure file transfers. To ensure compatibility with a wide range of servers, it supports multiple encryption algorithms, including some that do not comply with current security best practices. For details, refer to the following URL.
https://helpguide.sony.net/di/sftp/v1/h_zz/index.html

Optional accessories

- It is recommended that you use genuine Sony accessories.
- Some Sony accessories are only available in certain countries and regions.

Available models and kits

Some models and kits are only available in certain countries and regions.

5-043-036-16(1) Copyright 2022 Sony Corporation

Lending, transferring or discarding the camera and/or memory card to others (Notes on protecting private information)

Important information may be recorded on the camera and/or memory card depending on the functions and camera settings.
Before lending, transferring, or discarding the camera and/or memory card to others, be sure to read the following and make sure that you have completed the procedures.

Notes on lending, transferring, or discarding the camera to others

Before lending, transferring, or discarding the camera to others, be sure to perform the following operation to protect private information.

- Select [Setting Reset] → [Initialize].

When you initialize the device, the following information is deleted:

- Faces registered in [Face Memory]
- Root certificates for RTMP, the cloud, and the correct date and time
- Root certificates for FTP
- Access point information
- Access authentication information
- FTP server settings
- Cloud connection information
- Network streaming connection information

Notes on using the cloud service (Creators' Cloud)

Before lending or transferring the camera, make sure that the camera linkage information and upload settings are appropriate to prevent damage such as the content on the camera being uploaded to an unintended third party's Creators' Cloud. If the settings are not appropriate, be sure to perform the following operations.

- If you will transfer or lend the camera: initialize the camera or cancel the linkage with Creators' Cloud on the camera. Also, cancel the camera linkage in Creators' Cloud.
- If the camera is transferred to you or you borrow the camera: initialize the camera or cancel the linkage with Creators' Cloud on the camera.

Note that Creators' Cloud may only be available in certain countries and regions.

Notes on lending, transferring, or discarding a memory card to others

Executing [Format] or [Delete] on the camera or a computer may not completely delete the data on the memory card. Before lending or transferring a memory card to others, we recommend that you delete any data on it completely using data deletion software. When discarding a memory card, we recommend that you physically destroy it.

Notes on network functions

When you use network functions, unintended third parties on the network may access the camera, depending on the usage environment. For example, unauthorized access to the camera may occur in network environments to which another network device is connected or can connect without permission. Sony bears no responsibility for any loss or damage caused by connecting to such network environments.

Notes on the [Face Memory] function

Faces registered through the [Face Memory] function are considered biometric information. Before lending or transferring this camera, initialize the camera to prevent face information registered through the [Face Memory] function from being passed on to an unintended third party.

Notes on location information

If you upload and share still images or movies taken with this camera on the Internet while the location information is linked with the dedicated smartphone application, you may accidentally reveal the location information to a third party. To prevent third parties from obtaining your location information, deactivate the [Location Information Linkage] function of the dedicated application.

Warning on copyrights

Television programs, films, videotapes, and other materials may be copyrighted. Unauthorized recording of such materials may be contrary to the provisions of the copyright laws.

Related Topic

- Creating an account for Creators' Cloud and linking your camera to the account (Cloud Connection)
- Displaying cloud connection information (Cloud Information)

5-043-036-16(1) Copyright 2022 Sony Corporation

Notes on the battery pack and charging the battery

Notes on using the battery pack

- Be sure to use only genuine Sony branded battery packs.
- The correct remaining battery indicator may not be displayed under some operating or environmental conditions.
- Do not expose the battery pack to water. The battery pack is not water-resistant.
- Do not leave the battery pack in extremely hot places, such as in a car or under direct sunlight.

Notes on charging the battery pack

- Charge the battery pack (supplied) before using the product for the first time.
- The charged battery pack will discharge little by little even if you do not use it. Charge the battery pack each time before you use the product so that you do not miss any opportunities to shoot images.
- Do not charge battery packs except battery packs specified for this product. Doing so can result in leaks, overheating, explosions, electric shocks, burns, or injuries.
- When you use a completely new battery pack or a battery pack that has not been used for a long time, the charge lamp (CHARGE) may flash quickly when the battery is charged. If this happens, remove the battery pack and then re-insert it to recharge.
- We recommend charging the battery pack in an ambient temperature of between 10 °C and 30 °C (50 °F and 86 °F). The battery pack may not be correctly charged in temperatures outside this range.
- Operation cannot be guaranteed with all external power supplies.
- When charging is finished, disconnect the AC Adaptor from the wall outlet (wall socket) or disconnect the USB cable from the camera. Not doing so may result in a shorter battery life.
- Do not continuously or repeatedly charge the battery pack without using it if it is already fully charged or close to fully charged. Doing so may cause a deterioration in battery performance.
- If the product's charge lamp flashes while charging, remove the battery pack being charged, and then insert the same battery pack firmly back into the product. If the charge lamp flashes again, this may indicate a faulty battery or that a battery pack other than the specified type has been inserted. Check that the battery pack is the specified type.
  If the battery pack is the specified type, remove the battery pack, replace it with a new or different one and check that the newly inserted battery is charging correctly. If the newly inserted battery is charging correctly, the previously inserted battery may be faulty.
- If the charge lamp flashes even if the AC Adaptor is connected to the product and the wall outlet (wall socket), this indicates that charging has stopped temporarily and is on standby. Charging stops and enters standby status automatically when the temperature is outside of the recommended operating temperature. When the temperature returns to the appropriate range, charging resumes and the charge lamp lights up again.
- The AC Adaptor (supplied in some countries/regions) is exclusively for use with this product. Do not connect with other electronic devices. Doing so may cause a malfunction.

Remaining battery indicator

- The remaining battery indicator appears on the screen. It takes about one minute for the correct remaining battery indicator to appear.
- The correct remaining battery indicator may not be displayed under some operating or environmental conditions.
- If the remaining battery indicator does not appear on the screen, press the DISP (Display Setting) button to display it.

Effective use of the battery pack

- Battery performance decreases in low temperature environments. So in cold places, the operational time of the battery pack is shorter. To ensure longer battery pack use, we recommend putting the battery pack in your pocket

close to your body to warm it up, and insert it in the product immediately before you start shooting. If there are any metal objects such as keys in your pocket, be careful of causing a short-circuit.
- The battery pack will become depleted quickly if you shoot images continuously and frequently, turn the power on/off frequently, or set the monitor very bright.
- We recommend preparing spare battery packs and taking trial shots before taking the actual shots.
- If the battery terminal is dirty, you may not be able to turn on the product or the battery pack may not be properly charged. In that case, clean the battery by lightly wiping off any dust using a soft cloth or a cotton swab.

How to store the battery pack

To maintain the battery pack's function, charge the battery pack and then fully discharge it in the camera at least once a year before storing it. Store the battery in a cool, dry place after removing it from the camera.

On battery life

- The battery life is limited. If you use the same battery repeatedly, or use the same battery for a long period, the battery capacity decreases gradually. If the available time of the battery is shortened significantly, it is probably time to replace the battery pack with a new one.
- The battery life varies according to how the battery pack is stored and the operating conditions and environment in which each battery pack is used.

5-043-036-16(1) Copyright 2022 Sony Corporation

Notes on memory card

- If [!] (overheating warning icon) is displayed on the monitor, do not remove the memory card from the camera right away. Instead, wait for a while after turning off the camera, and then remove the memory card. If you touch the memory card while it is hot, you may drop it and the memory card may be damaged. Be careful when removing the memory card.
- If you repeatedly shoot and delete images for a long time, fragmentation of data in a file in the memory card may occur, and movie recording may be interrupted in the middle of shooting. If this happens, save your images to a computer or other storage location, then execute [Format] using this camera.
- Do not remove the battery pack or the memory card, disconnect the USB cable, or turn the camera off while the access lamp is lit up. This may cause the data on the memory card to become damaged.
- Be sure to back up the data for protection.
- Not all memory cards are guaranteed to operate correctly.
- Images recorded on an SDXC/CFexpress Type A memory card cannot be imported to or played on computers or AV devices not compatible with exFAT when connected using a USB cable. Make sure that the device is compatible with exFAT before connecting it to the camera. If you connect your camera to an incompatible device, you may be prompted to format the card. Never format the card in response to this prompt, as doing so will erase all data on the card.
  (exFAT is the file system used on SDXC memory cards or CFexpress Type A memory cards.)
- Do not expose the memory card to water.
- Do not strike, bend or drop the memory card.
- Do not use or store the memory card under the following conditions:
  - High temperature locations such as in a car parked under the sun
  - Locations exposed to direct sunlight
  - Humid locations or locations with corrosive substances present
- If the memory card is used near areas with strong magnetization, or used in locations subject to static electricity or electrical noise, the data on the memory card may become damaged.
- Do not touch the terminal section of the memory card with your hand or a metal object.
- Do not leave the memory card within the reach of small children. They might accidentally swallow it.
- Do not disassemble or modify the memory card.
- The memory card may be hot just after it has been used for a long time. Be careful when you handle it.
- Memory card formatted with a computer is not guaranteed to operate with the product. Be sure to format the memory card using this product.
- Data read/write speeds differ depending on the combination of the memory card and the equipment used.
- Do not press down hard when writing in the memo space on the memory card.
- Do not attach a label on the memory card itself nor on a memory card adaptor. You may not be able to remove the memory card.
- If the write-protect switch or delete-protect switch of an SD memory card is set to the LOCK position, you cannot record or delete images. In this case, set the switch to the record position.
- To use a microSD memory card with this product:
  - Be sure to insert the memory card into a dedicated adaptor. If you insert a memory card into the product without a memory card adaptor, you might not be able to remove it from the product.
  - When inserting a memory card into a memory card adaptor, be sure that the memory card is inserted in the correct direction and then insert it as far as it will go. If the card is not inserted properly, it may result in a malfunction.

Related Topic

- Format

5-043-036-16(1) Copyright 2022 Sony Corporation

Cleaning the image sensor (Sensor Cleaning)

If dust or debris gets inside the camera and adheres to the surface of the image sensor (the part that converts the light to an electric signal), it may appear as dark spots on the image, depending on the shooting environment. If this happens, clean the image sensor quickly by following the steps below.

1. **Confirm that the battery has been charged sufficiently.**

2. **MENU → (Setup) → [Setup Option] → [Sensor Cleaning] → [Enter].**

   The image sensor vibrates a little to shake off the dust.

3. **Turn off the camera following the instructions on the screen.**

4. **Detach the lens.**

5. **Use a commercially available blower to clean the image sensor surface and the surrounding area.**

   - Hold the camera slightly face downward so that the dust falls out.

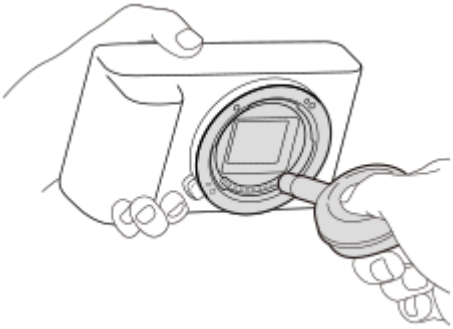

6. **Attach the lens.**

Hint

- For how to check the amount of dust on the image sensor, and for further details on cleaning methods, please refer to the following URL.
  https://support.d-imaging.sony.co.jp/www/support/ilc/sensor/index.php

Note

- Make sure that the remaining battery level is 51% or more before performing [Sensor Cleaning].
- Do not use a spray type blower as it may scatter water droplets inside the camera body.
- Do not put the tip of a blower into the cavity beyond the lens mount area, so that the tip of the blower does not touch the image sensor.
- When cleaning the image sensor with a blower, do not blow too hard. If you blow the sensor too hard, the inside of the product may be damaged.

- If the dust remains even after you cleaned the product as described, consult the service facility.
- During cleaning, the image sensor emits a vibrating noise. This is not a malfunction.
- Cleaning may be performed automatically when the power is turned off.

Related Topic

- Attaching/removing a lens

5-043-036-16(1) Copyright 2022 Sony Corporation

On cleaning

Cleaning the lens

- Do not use a cleaning solution containing organic solvents, such as thinner, or benzine.
- When cleaning the lens surface, remove dust with a commercially available blower. In case of dust that sticks to the surface, wipe it off with a soft cloth or tissue paper slightly moistened with lens cleaning solution. Wipe in a spiral pattern from the center to the outside. Do not spray lens cleaning solution directly onto the lens surface.

Cleaning the camera body

Do not touch the parts of the product inside the lens mount, such as a lens signal contact. To clean inside the lens mount, use a commercially available blower* to blow any dust off.

* Do not use a spray-type blower as doing so may cause a malfunction.

Cleaning the product surface

Clean the product surface with a soft cloth slightly moistened with water, then wipe the surface with a dry cloth. To prevent damage to the finish or casing:

- Do not expose the product to chemical products such as thinner, benzine, alcohol, disposable cloths, insect repellent, sunscreen or insecticide.
- Do not touch the product with any of the above on your hand.
- Do not leave the product in contact with rubber or vinyl for a long time.

Cleaning the monitor

- If you wipe the monitor firmly using tissue paper, etc., the monitor may be scratched.
- If the monitor becomes dirty with fingerprints or dust, gently remove the dust from the surface, and then clean the monitor using soft cloth, etc.

5-043-036-16(1) Copyright 2022 Sony Corporation

Interchangeable Lens Digital Camera
ILME-FX30

Front side

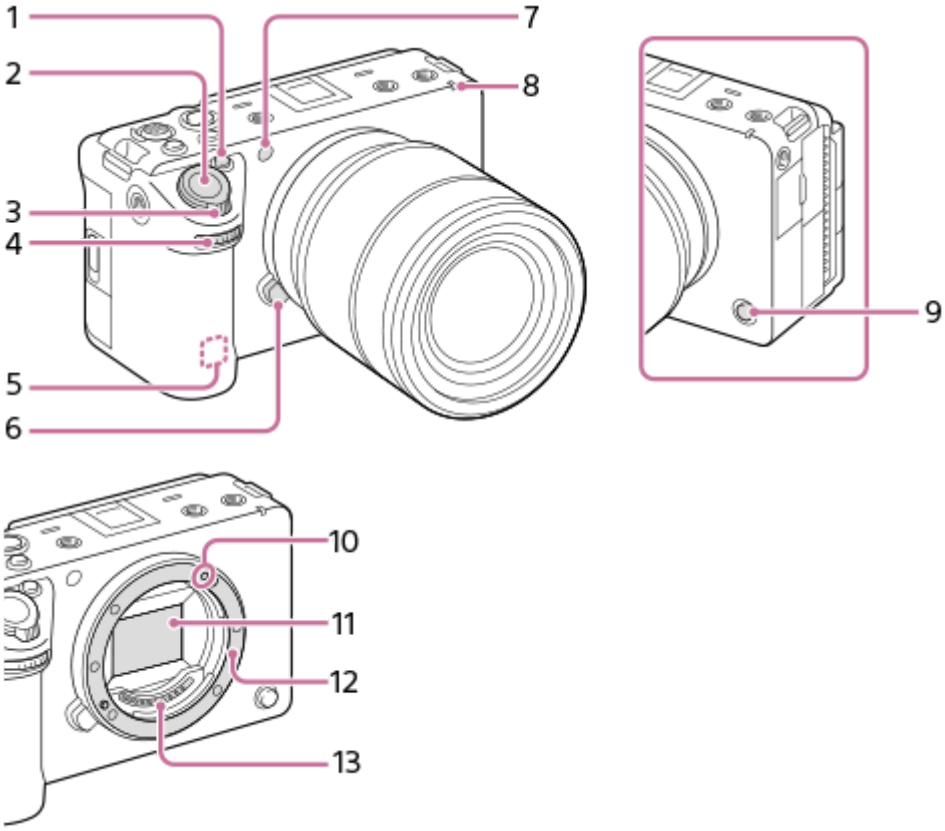

1. 1 button (Custom button 1)/IRIS (Iris) button
2. Shutter button
3. W/T (zoom) lever
4. Front dial
   You can quickly adjust the settings for each shooting mode.

5. WLAN antenna (built-in)
   Wi-Fi communication may be blocked if you cover this part with your hand, etc.

6. Lens release button
7. Visible light and IR sensor
   Do not cover this part during shooting.

8. Recording lamp
9. 6 button (Custom button 6)/REC (Recording) button
10. Mounting index
11. Image sensor*
12. Mount
13. Lens contacts*

* Do not directly touch these parts.

Related Topic

- Rear side
- Top side
- Sides
- Bottom

5-043-036-16(1) Copyright 2022 Sony Corporation

Interchangeable Lens Digital Camera
ILME-FX30

Rear side

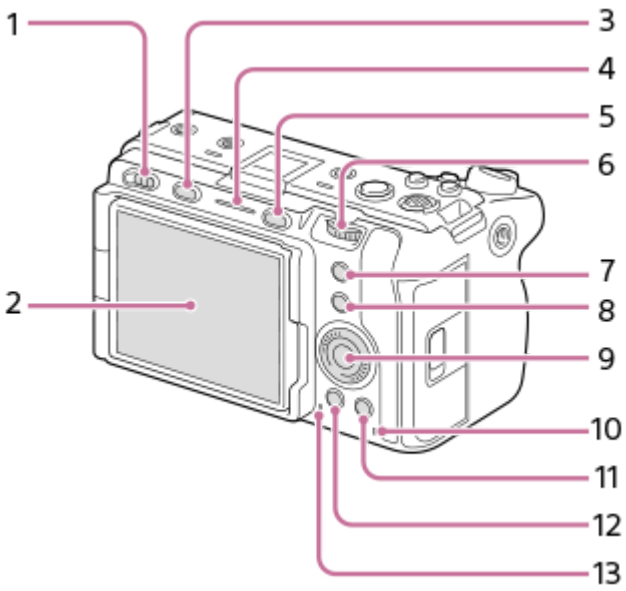

1. Power switch
2. Monitor/Touch panel
   You can adjust the monitor to an easily viewable angle and shoot from any position.

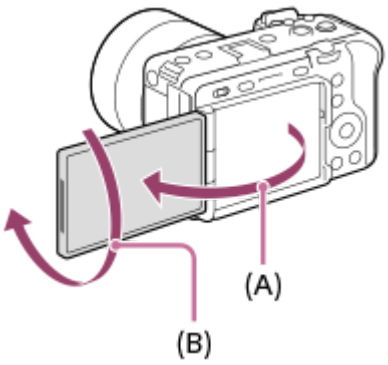

(A): Approx. 176°
(B): Approx. 270°

- You may not be able to adjust the monitor angle depending on the type of a tripod you use. In such a case, release the tripod screw once to adjust the monitor angle.
- Do not apply excessive force when opening, closing, or rotating the monitor. Doing so may cause a malfunction.

3. MODE (Mode) button
4. Recording lamp
5. MENU button
6. Rear dial
   You can quickly adjust the settings for each shooting mode.

7. 5 button (Custom button 5)/FOCUS MAG (Focus magnifier) button
8. Fn (Function) button
9. Control wheel
10. Access lamp

11. For shooting: 4 button (Custom button 4)
    For viewing: (Delete) button
12. (Playback) button
13. Speaker

Related Topic

- Front side
- Top side
- Sides
- Bottom

5-043-036-16(1) Copyright 2022 Sony Corporation

Top side

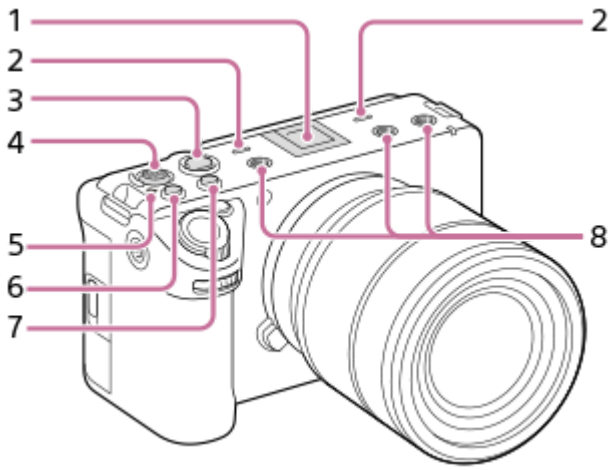

1. Multi Interface Shoe*
   Some accessories may not go in all the way and protrude backward from the Multi interface shoe. However, when the accessory reaches the front end of the shoe, the connection is completed.

2. Microphone
   Do not cover this part during movie recording. Doing so may cause noise or lower the volume.

3. REC (Recording) button
   When recording is started by pressing the REC (Recording) button, the button lights up in red.

4. Multi-selector
5. Image sensor position mark
   - The image sensor is the sensor that converts light into an electric signal. The position of the image sensor is indicated by (Image sensor position mark). When you measure the exact distance between the camera and the subject, refer to the position of the horizontal line.

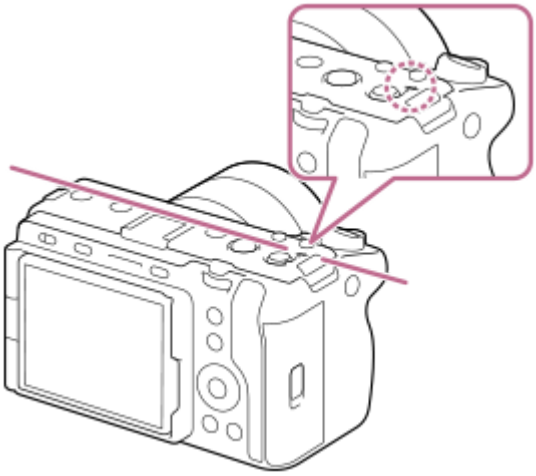

   - If the subject is closer than the minimum shooting distance of the lens, the focus cannot be confirmed. Make sure you put enough distance between the subject and the camera.

6. 3 button (Custom button 3)/ISO (ISO sensitivity) button
7. 2 button (Custom button 2)/WB (White balance) button

8. Thread holes for accessories
   Support 1/4-20 UNC screws
   Use an accessory with a screw less than 5.5 mm (7/32 inches) long. Otherwise, you will be unable to firmly secure the accessory, and damage to the camera may occur.

* Accessories for the Accessory Shoe can also be used. Operations with other manufacturers' accessories are not guaranteed.

Multi Interface Shoe

Accessory Shoe

Related Topic

- Front side
- Rear side
- Sides
- Bottom

5-043-036-16(1) Copyright 2022 Sony Corporation

Interchangeable Lens Digital Camera
ILME-FX30

Sides

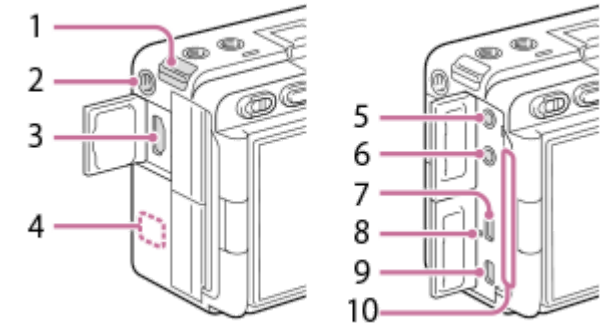

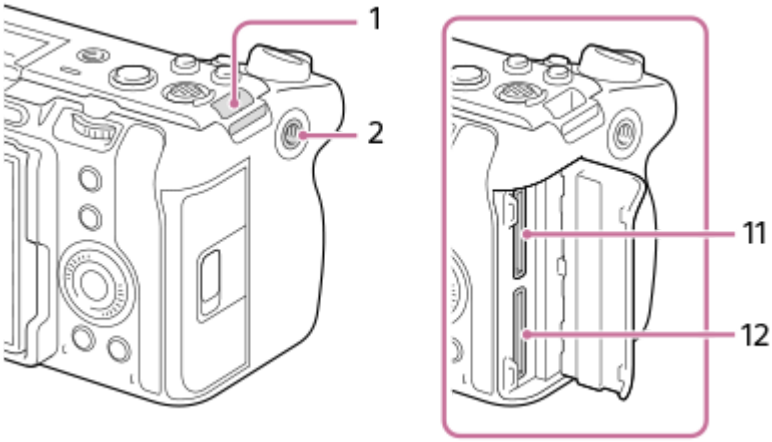

1. Hooks for shoulder strap (sold separately)
2. Thread hole for accessories
   Supports 1/4-20 UNC screws
   Use an accessory with a screw less than 5.5 mm (7/32 inches) long. Otherwise, you will be unable to firmly secure the accessory, and damage to the camera may occur.

3. HDMI type A jack
4. WLAN antenna (built-in)
   Wi-Fi communication may be blocked if you cover this part with your hand, etc.

5. (Microphone) jack
   When an external microphone is connected, the built-in microphone and the XLR handle unit (ILME-FX30 only) turn off automatically. When the external microphone is a plugin-power type, the power of the microphone is supplied by the camera.

6. (Headphones) jack
7. USB Type-C terminal
8. Charge lamp
9. Multi/Micro USB Terminal
   This terminal supports Micro USB-compatible devices.

10. Ventilation outlet
    Do not use the camera while touching the area around the ventilation outlet for a long time. Doing so may cause low-temperature burns.

11. SLOT 1 (Memory card slot 1)
12. SLOT 2 (Memory card slot 2)

Notes on USB terminals

You can use either the USB Type-C terminal or the Multi/Micro USB Terminal for USB communications. However, you cannot conduct USB communications with both terminals simultaneously. Use the USB Type-C terminal to supply power and charge the battery pack. This camera cannot be powered via the Multi/Micro USB terminal.

- You can use accessories for the Multi Terminal, such as a remote commander (sold separately), while supplying power or performing remote shooting using the USB Type-C terminal.

Notes on the terminal cover

Ensure that the terminal cover is closed before use.

Related Topic

- Front side
- Rear side
- Top side
- Bottom

5-043-036-16(1) Copyright 2022 Sony Corporation

Bottom

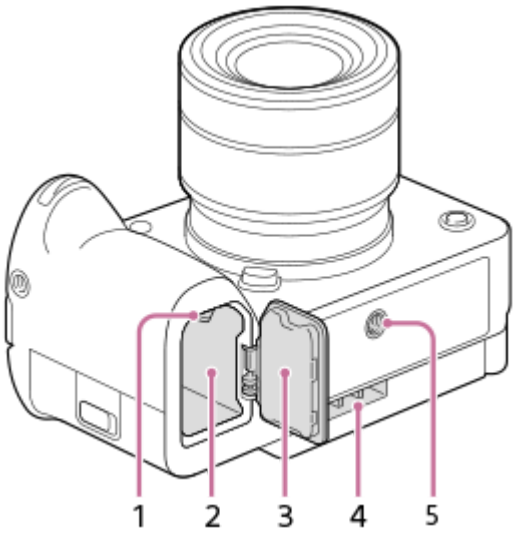

1. Lock lever
2. Battery insertion slot
3. Battery cover
   Before attaching an accessory such as the Multi Battery Adaptor Kit (sold separately), remove the battery cover.

To remove the battery cover

Pull the battery cover release lever (A) in the direction of the arrow, and then remove the battery cover.

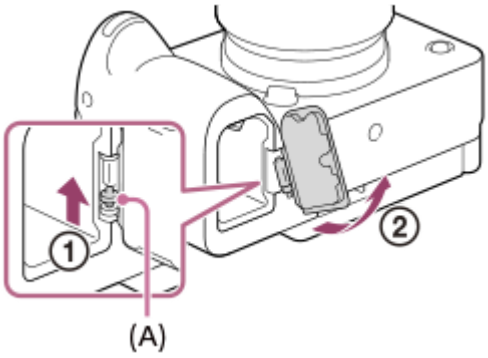

To attach the battery cover

Insert the shaft on one side of the battery cover into the attachment site, and then push in the battery cover by attaching the shaft on the opposite side.

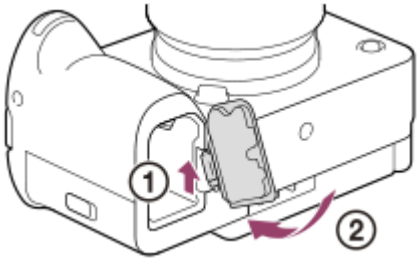

4. Ventilation inlet
   Do not cover the ventilation inlet.

5. Tripod socket hole
   Supports 1/4-20 UNC screws
   Use a tripod with a screw less than 5.5 mm (7/32 inches) long. Otherwise, you cannot firmly secure the camera, and damage to the camera may occur.

Related Topic

- Front side
- Rear side
- Top side
- Sides

5-043-036-16(1) Copyright 2022 Sony Corporation

Interchangeable Lens Digital Camera
ILME-FX30

XLR handle unit (ILME-FX30 only)

Body parts

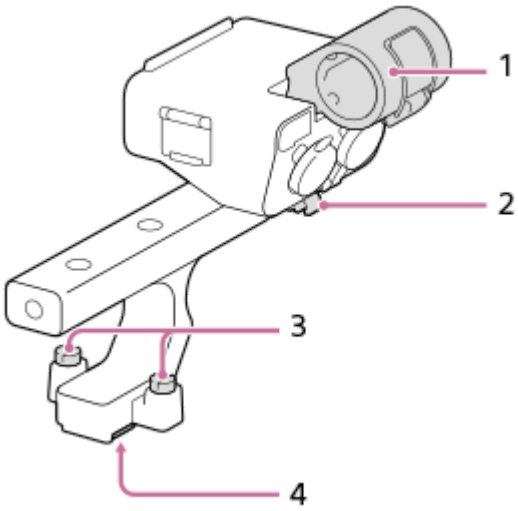

1. Microphone holder
2. Cable holder
3. Attachment screws
4. Multi Interface foot

Switches and dials

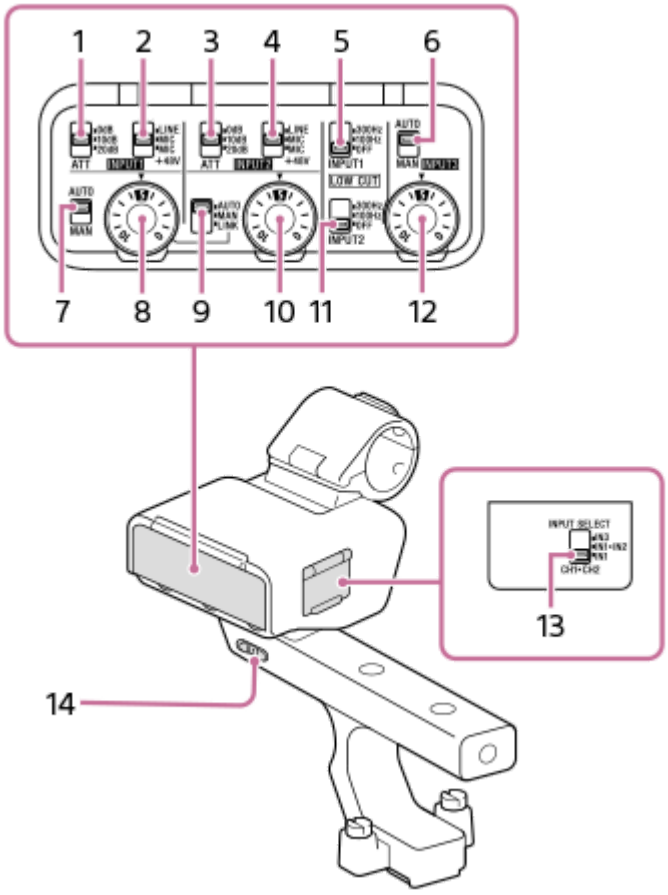

1. ATT (INPUT1) switch
   Select the standard input level of the INPUT1 jack. This switch setting is active when the INPUT1 (LINE/MIC/MIC+48V) switch is set to “MIC” or “MIC+48V.”

2. INPUT1 (LINE/MIC/MIC+48V) switch
   Select the option suitable for the device connected to the INPUT1 jack.

3. ATT (INPUT2) switch
   Select the standard input level of the INPUT2 jack. This switch setting is active when the INPUT2 (LINE/MIC/MIC+48V) switch is set to “MIC” or “MIC+48V.”

4. INPUT2 (LINE/MIC/MIC+48V) switch
   Select the option suitable for the device connected to the INPUT2 jack.

5. LOW CUT (INPUT1) switch
   Use this switch to minimize unwanted noise by attenuating low-frequency components of the input audio from the INPUT1 jack.

6. AUTO/MAN (INPUT3) switch
   Select the method (Auto/Manual) for adjusting the volume level of the input audio from the INPUT3 jack.

7. AUTO/MAN (INPUT1) switch
   Select the method (Auto/Manual) for adjusting the volume level of the input audio from the INPUT1 jack.

8. AUDIO LEVEL (INPUT1) dial
   Adjust the recording volume level of the input audio from the INPUT1 jack.

9. AUTO/MAN/LINK (INPUT2) switch
   Select the method (Auto/Manual/Link to INPUT1) for adjusting the volume level of the input audio from the INPUT2 jack.

10. AUDIO LEVEL (INPUT2) dial
    Adjust the recording volume level of the input audio from the INPUT2 jack.

11. LOW CUT (INPUT2) switch
    Use this switch to minimize unwanted noise by attenuating low-frequency components of the input audio from the INPUT2 jack.

12. AUDIO LEVEL (INPUT3) dial
    Adjust the recording volume level of the input audio from the INPUT3 jack.

13. INPUT SELECT switch
    Select the audio input for recording audio to the channels on the attached camera.

14. HANDLE AUDIO switch
    Enable audio input from the XLR adaptor.

Ports and jacks

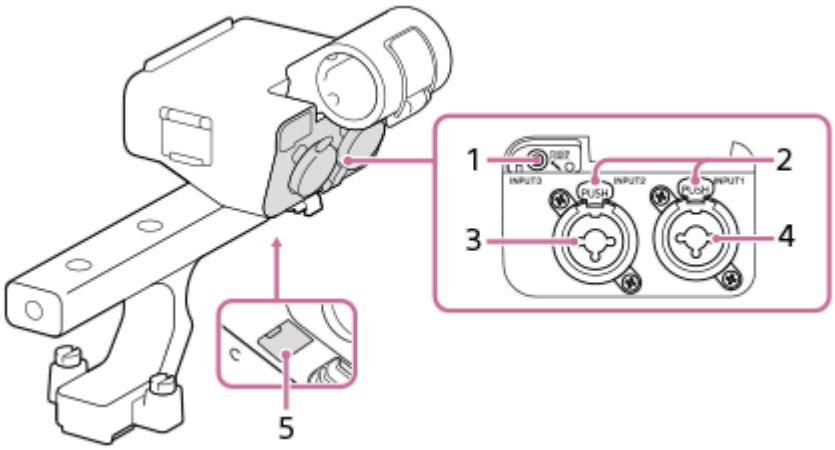

1. INPUT3 jack (stereo mini-jack, plug-in-power compatible)
2. Release lever
3. INPUT2 jack (3-pin XLR/TRS, female type, phantom-power compatible)
4. INPUT1 jack (3-pin XLR/TRS, female type, phantom-power compatible)
5. Micro USB port

Note

- Do not touch the connectors with bare hands.

Related Topic

- Attaching the supplied XLR handle unit (only with ILME-FX30)
- Recording audio using the XLR adaptor of the supplied handle (only with the ILME-FX30)

5-043-036-16(1) Copyright 2022 Sony Corporation

Interchangeable Lens Digital Camera
ILME-FX30

Basic icons displayed on the monitor

This section describes the screen display when the shooting mode is (Flexible Exp. Mode) for movie shooting and (Program Auto) for still image shooting.

- The examples are of the display when the screen is in the all-information display mode.
- The displayed content and positions are for reference only, and may differ from the actual display. Also, the displayed content may vary depending on the camera settings and the camera's system software (firmware) version.

During movie recording

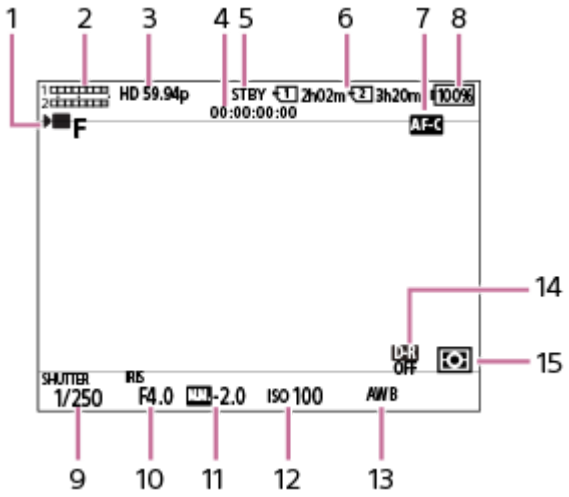

1. [Exposure Mode] is set to (Flexible Exp. Mode).
2. Audio level
3. [File Format] is set to [XAVC S HD] and [Rec Frame Rate] is set to [59.94p].
4. Time code
5. The camera is in the shooting standby mode.
6. Slot number of the memory card recording the shooting data and recordable movie time
7. [Focus Mode] is set to [Continuous AF].
8. Remaining battery level
9. Shutter speed
10. Aperture value
11. Exposure compensation
12. ISO sensitivity
13. [White Balance] is set to [Auto].
14. [D-Range Optimizer] is set to [Off].
15. [Metering Mode] is set to [Multi].

During still image shooting

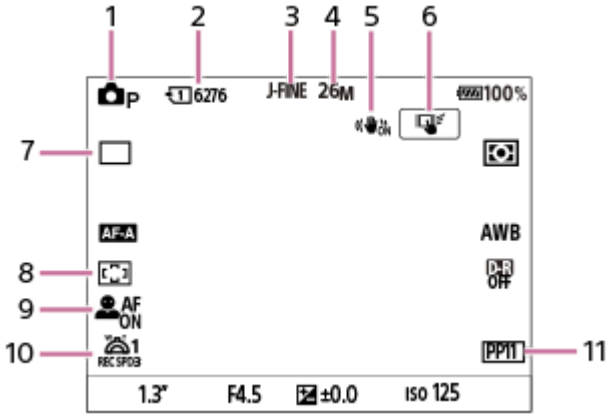

1. The shooting mode is set to P (Program Auto).
2. Number of still images that can be recorded on the memory card in the currently displayed slot
3. [JPEG/HEIF Switch] is set to [JPEG]. [JPEG Quality] is set to [Fine].
4. [JPEG Image Size] is set to [26M].
5. [SteadyShot] is set to [On].
6. [Touch Func. in Shooting] is set to [Touch Tracking].
7. [Drive Mode] is set to [Single Shooting].
8. [Focus Area] is set to [Wide].
9. [Face/Eye Prior. in AF] is set to [On] and [Face/Eye Subject] is set to [Human].
10. [1st Zoom Spd. REC] under [Zoom Lever Speed] is set to [3].
11. [Picture Profile] is set to [PP11].

Related Topic

- List of icons on the screen for shooting movies
- List of icons on the screen for shooting still images
- List of icons on the playback screen

5-043-036-16(1) Copyright 2022 Sony Corporation

Interchangeable Lens Digital Camera
ILME-FX30

Touch operations on the monitor

By touching the monitor, you can intuitively perform operations such as focusing on the shooting screen and operating the playback screen.

Touch operations (on the shooting screen)

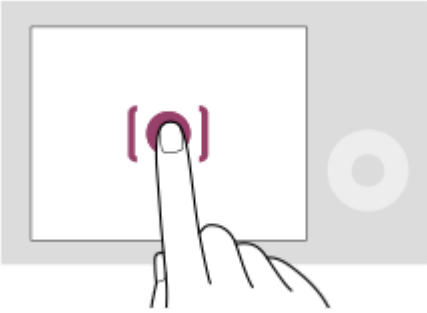

Touch the monitor to specify where to focus (Touch Focus).
Touch a subject on the monitor to use the touch tracking function (Touch Tracking).
You can also focus on a subject and shoot images simply by touching the subject on the screen (Touch Shutter).
For information on how to switch the function activated by touch operation, refer to “ Touch Func. in Shooting .”

Touch operations (on the playback screen)

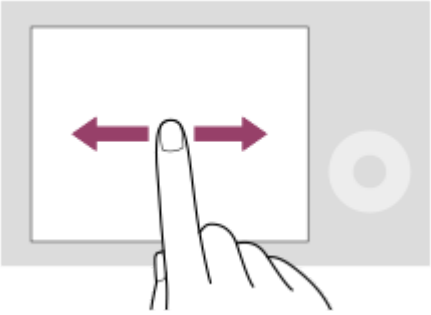

During single-image playback, swipe the screen to the left or right to move to the previous or next image.

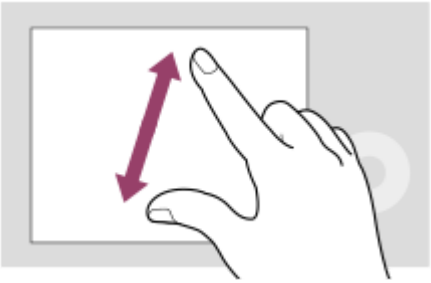

During single-image playback, you can enlarge or reduce the displayed image by moving apart or bringing together two fingers on the screen (pinch-out/pinch-in).

- You can also double-tap the monitor to enlarge a still image or exit the enlarged image.
- During movie playback, you can start or pause playback using touch operations.

Hint

- You can open the function menu by swiping upward quickly on the shooting screen.

Related Topic

- Touch Operation
- Touch Func. in Shooting
- Focusing using touch operations (Touch Focus)
- Starting tracking with touch operations (Touch Tracking)
- Shooting with touch operations (Touch Shutter)
- Swipe Up

5-043-036-16(1) Copyright 2022 Sony Corporation

Interchangeable Lens Digital Camera
ILME-FX30

Using the control wheel

On the menu screen or the screen displayed by pressing the Fn button, you can move the selection frame by turning the control wheel or by pressing the top/bottom/left/right side of the control wheel. Your selection is confirmed when you press the center of the control wheel.

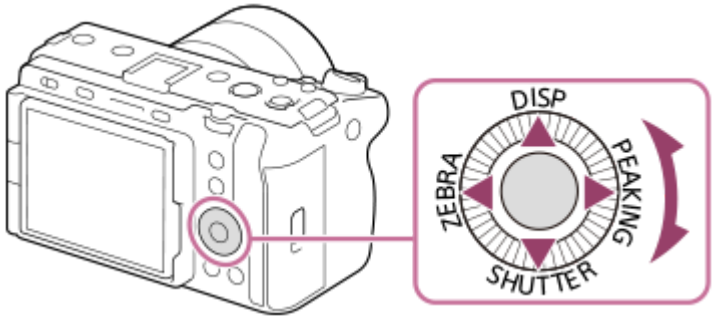

- The DISP (Display Setting), SHUTTER (L.PressTv Auto/Manual), ZEBRA (Zebra Display Select), and PEAKING (Peaking Display Select) functions are assigned to the top/bottom/left/right side of the control wheel. In addition, you can assign selected functions to the left/right/bottom side and the center of the control wheel, and to the rotation of the control wheel.
- During playback, you can display the next/previous image by pressing the right/left side of the control wheel or by turning the control wheel.

Related Topic

- Assigning frequently used functions to buttons and dials (Custom Key/Dial Set.)
- Changing the function of the dial temporarily (My Dial Settings)

5-043-036-16(1) Copyright 2022 Sony Corporation

Using the multi-selector

You can move the focus area by pushing the multi-selector up/down/left/right. You can also assign a function to be activated when you press the center of the multi-selector.

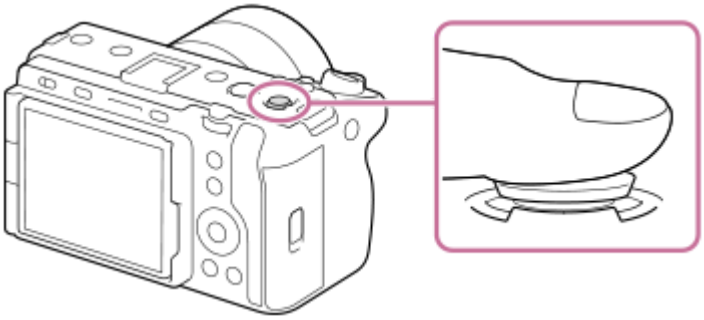

- Put your finger right on top of the multi-selector to manipulate it more precisely.
- You can move the focus area when [Focus Area] is set to the following parameters:
  - [Zone]
  - [Spot: S] / [Spot: M] / [Spot: L]
  - [Expand Spot]
  - [Tracking: Zone]
  - [Tracking: Spot S] / [Tracking: Spot M] / [Tracking: Spot L]
  - [Tracking: Expand Spot]
- The [Focus Standard] function is assigned to the center of the multi-selector in the default settings.

Related Topic

- Selecting the focus area (Focus Area)
- Focus Standard

5-043-036-16(1) Copyright 2022 Sony Corporation

Interchangeable Lens Digital Camera
ILME-FX30

Using the MODE (Mode) button

Use the MODE (Mode) button to select a shooting mode according to the subject and purpose of shooting.

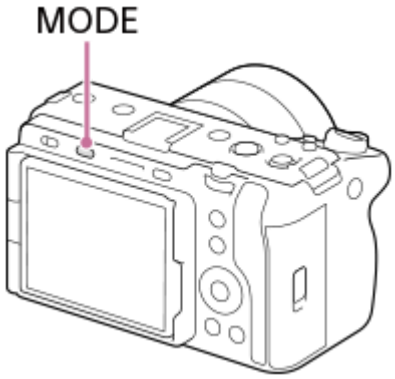

- Press the MODE button, use the control wheel to select the desired shooting mode, and then press the center of the control wheel.

Shooting mode details

The shooting modes are divided into still image shooting modes, movie recording modes, and registration recall modes.

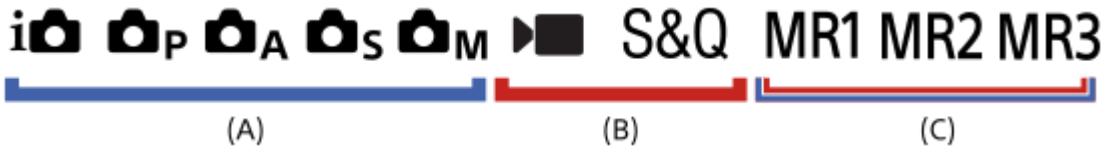

(A) Still image shooting modes
(B) Movie recording modes
(C) Registration recall modes

Hint

- The menu items displayed vary depending on the shooting mode.

(A) Still image shooting modes

The shooting mode you select determines how to adjust the aperture (F value) and shutter speed.

Icon	Shooting mode	Description
(Intelligent Auto)	Intelligent Auto	The camera shoots with automatic scene recognition.
P	Program Auto	Allows you to shoot with the exposure adjusted automatically (both the shutter speed and the aperture value). You can set shooting functions such as [ISO].
A	Aperture Priority	The aperture value is given priority and the shutter speed is adjusted automatically. Select this when you want to blur the background or focus on the entire screen.

Icon	Shooting mode	Description
S	Shutter Priority	The shutter speed is given priority and the aperture value is adjusted automatically. Select this when you want to shoot a fast-moving subject without blurring, or when you want to shoot a water or light trail.
M	Manual Exposure	Manually adjust both the aperture value and shutter speed. You can shoot with your favorite exposure.

(B) Movie recording modes

Icon	Shooting mode	Description
(Movie)	Movie	You can set the exposure mode for movie shooting.
S&Q	S&Q Motion	You can set the exposure mode for S&Q Motion shooting.

The method for setting the exposure in the movie recording modes depends on the MENU → (Shooting) → [Shooting Mode] → [Exposure Ctrl Type] setting.

When [Exposure Ctrl Type] is set to [P/A/S/M Mode]:

MENU → (Shooting) → [Shooting Mode] → [Exposure Mode] or [S&Q Exposure Mode] → Select the desired exposure mode from among P/A/S/M.

When [Exposure Ctrl Type] is set to [Flexible Exp. Mode]:

The aperture value, shutter speed, and ISO sensitivity can be switched between the automatic setting and manual setting by holding down the IRIS (Iris) button / SHUTTER (Shutter) button / ISO (ISO sensitivity) button. If you select the manual setting, turn the front/rear dial or the control wheel and set the desired value.

In the manual setting mode, values can be locked by pressing the IRIS button / SHUTTER button / ISO button. You can use this function to prevent the values from being unintentionally changed.

(C) Registration recall modes

Icon	Shooting mode	Description
MR1 / **MR2** / **MR3**	MR Recall Camera Setting	You can call up frequently used modes and numerical value settings that have been registered* in advance then shoot the images. * In [MR Camera Set. Memory], you can register various shooting settings, such as the exposure mode (P / A / S / M), aperture (F value), and shutter speed.

Related Topic

- Intelligent Auto
- Program Auto
- Aperture Priority
- Shutter Priority
- Manual Exposure
- Exposure Ctrl Type
- Movie: Exposure Mode
- S&Q Motion: Exposure Mode
- Recall Camera Setting
- Camera Set. Memory
- Using the menu

5-043-036-16(1) Copyright 2022 Sony Corporation

Interchangeable Lens Digital Camera
ILME-FX30

Using the menu

The menu screen is displayed by pressing the MENU button. You can change settings related to all of the camera operations including shooting and playback, or you can execute a function from the menu screen.

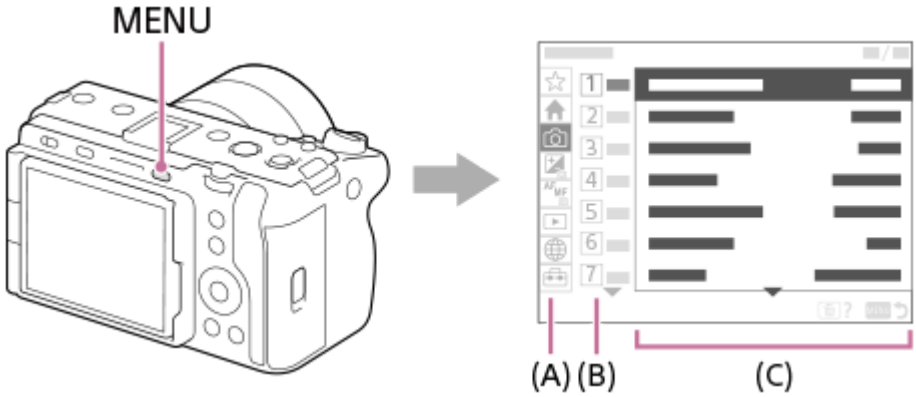

(A) Menu tab

Menu tabs are categorized by usage scenario, such as shooting, playback, network settings, etc.

(B) Menu group

In each tab, menu items are grouped by function.
The number assigned to the group is the serial number in the tab. Refer to the number to determine the location of the group in use.

(C) Menu item

Select the function you want to set or execute.

Hint

- The name of the selected tab or group is displayed at the top of the screen.
- When [Touch Operation] is set to [On], touch operations on the menu screen are possible.

Basic operations on the menu screen

1. Press the MENU button to display the menu screen.
2. Move within the menu tree and find the desired menu item by pressing the top/bottom/left/right side of the control wheel.
   - The displayed menu items differ between the still image shooting modes and movie recording modes.

(A) Menu tabs
(B) Menu groups
(C) Menu items

3. Press the center of the control wheel to select the menu item.
   The setting screen or execution screen for the selected item will appear on the monitor.

4. Select a parameter or execute the function.
   - If you want to cancel changing the parameter, press the MENU button and go back to the previous screen.

5. Press the MENU button to exit the menu screen.
   You will return to the shooting screen or playback screen.

Hint

- In the (Main) tab, you can view a list of the current shooting settings. Select a setting value in the tab to open the corresponding menu item and change the setting value.
- You can display the menu screen by assigning the [MENU] function to a custom key using [Custom Key/Dial Set.] or [Custom Key/Dial Set.], and then pressing that key.

Relationship between the shooting mode and menu screen

The menu groups and menu items displayed in the [Main], [Shooting], [Exposure/Color], and [Focus] tabs vary depending on the shooting mode.

Still image shooting modes (AUTO/P/A/S/M)

- Menu items for shooting still images are displayed.*

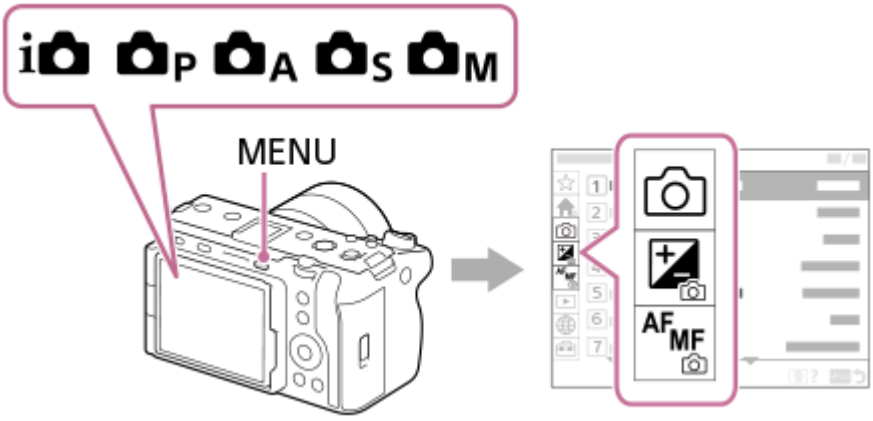

* Since you can record movies with the REC (recording) button even in the still image shooting mode, some basic movie menu items are also displayed.

Movie recording modes (/S&Q)

- Menu items for recording movies are displayed.

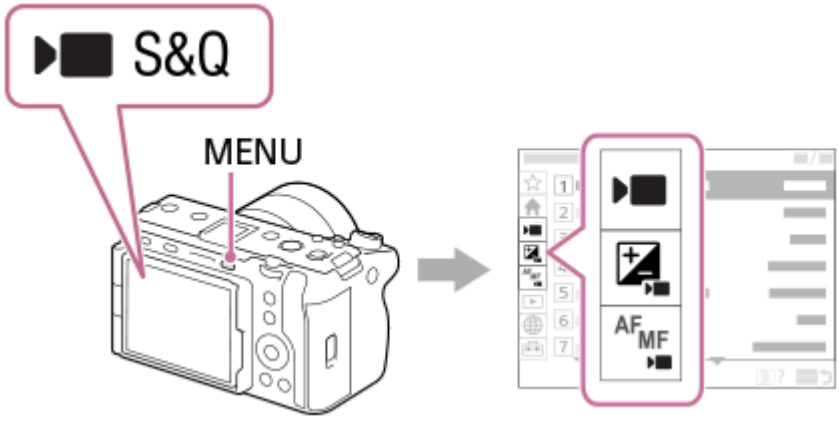

Latest software notification badge

If newer camera software is available, a red notification badge will appear over the (Setup) tab, [Setup Option], and [Version] in the menu screen to notify you that an update is available (when the camera's system software (firmware) is Ver.5.00 or later).

Icons used in the "Help Guide"

: Menu items displayed in the still image shooting modes (AUTO/P/A/S/M)
: Menu items displayed in the movie recording modes (Movie/S&Q)
: Menu items displayed in both the still image shooting modes and movie recording modes

---

Related Topic

- Add Item
- Display From My Menu
- Assigning frequently used functions to buttons and dials (Custom Key/Dial Set.)
- Using the MODE (Mode) button
- Using the Main menu (shooting setting list)
- Version

5-043-036-16(1) Copyright 2022 Sony Corporation

Interchangeable Lens Digital Camera
ILME-FX30

Using the home screen

When [S&Q Mode Settings] is set to [Fixed/Variable], the home screen can be displayed. On the home screen, you can check the recording settings and device settings for movie recording all at once.
Assign [HOME] to the desired key in advance using [Custom Key/Dial Set.]. In the movie recording mode, pressing the assigned key will display the home screen, and pressing it again will return to the recording screen.
This function can be used when the camera's system software (firmware) is Ver.6.00 or later.

Setting values for movie recording are displayed in areas 1 to 6. Touching each item will take you to the setting screen for that item.

1. FPS (Frame rate)
   - You can switch between [Fixed] and [Variable] from this screen. When set to [Variable], you can also set the frame rate.
2. ISO/Base ISO
   - When [Log Shooting] is set to [Off] or [Flexible ISO], the ISO value is displayed. When [Log Shooting] is set to [Cine EI Quick] or [Cine EI], the EI value of the Base ISO is displayed.
3. Shutter speed/Shutter angle
   - When [Shutter Mode] is set to [Angle], the shutter angle is displayed.
4. Aperture
   - By changing the settings in [Home (Lower Left)], you can change the item displayed from [Aperture] to [ND Filter].
5. Picture Profile/Select LUT
   - When [Log Shooting] is set to [Off], [Gamma] and [Color Mode] for [Picture Profile] are displayed. When [Log Shooting] is set to an item other than [Off], the setting value of [Select LUT] is displayed.
6. White Balance
7. Other camera settings
   - Displays the camera status and setting values. Settings cannot be changed even if touched.

Hint

- To select a setting item from 1 to 6, you can use the control wheel in addition to touch controls. Press the center of the control wheel to highlight an item, and then use the top/bottom/left/right side of the control wheel to move the highlighted position. Press the center button again to confirm your selection.

Switching to the menu screen or Fn menu screen

Just as when switching from the shooting screen to the menu screen or Fn menu screen, to switch from the home screen to the menu screen or Fn menu screen, press the MENU button or Fn button. Pressing either button again will return to the home screen. Also, you can switch to the home screen by pressing the key to which [HOME] has been assigned on the menu screen or Fn menu screen.
The following image is an example of [HOME] assigned to the 5 (Custom 5) button.

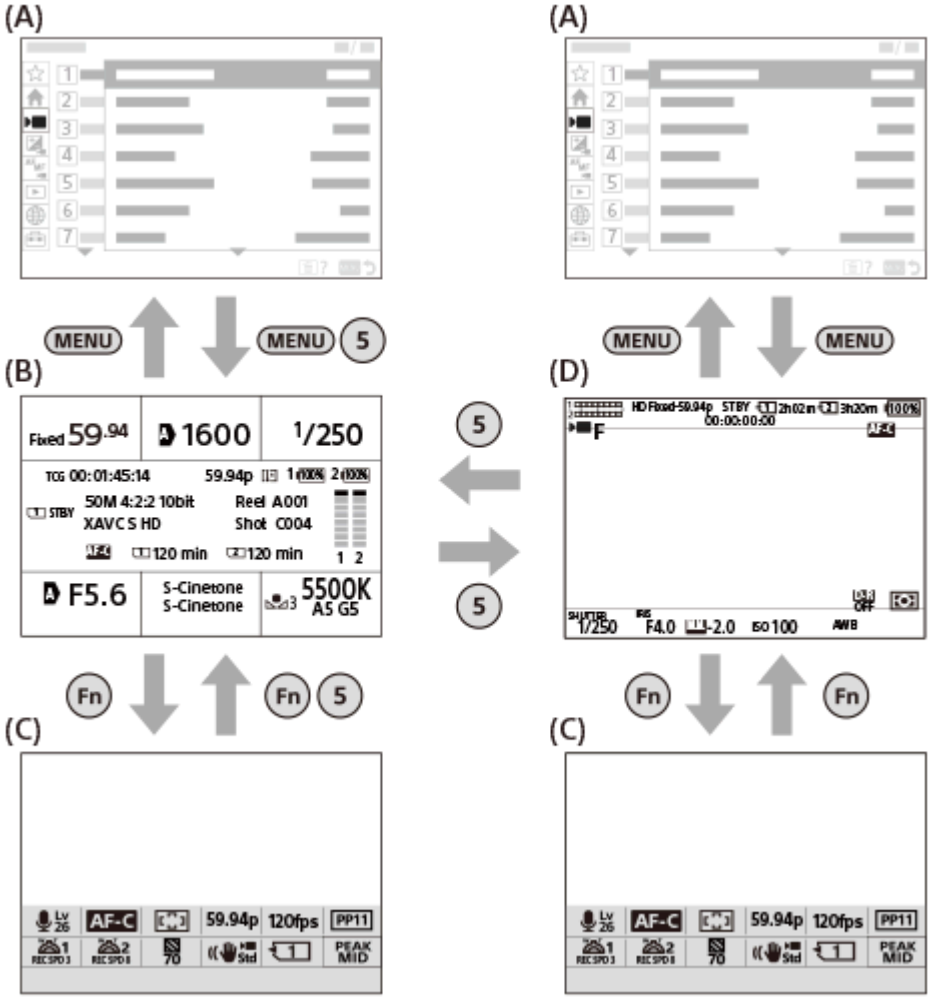

(A): Menu screen
(B): Home screen
(C): Fn menu screen
(D): Recording screen

Note

- The home screen is not displayed in the still image shooting mode.
- You cannot change any settings other than those in the lower left of the home screen.

Related Topic

- FPS
- Home (Lower Left)

5-043-036-16(1) Copyright 2022 Sony Corporation

Interchangeable Lens Digital Camera
ILME-FX30

Using the Main menu (shooting setting list)

Select the (Main) tab on the menu screen to display a list of shooting settings. You can confirm the settings before shooting or for each scene, and also change the settings directly from this screen.

Main menu for shooting movies

Main1

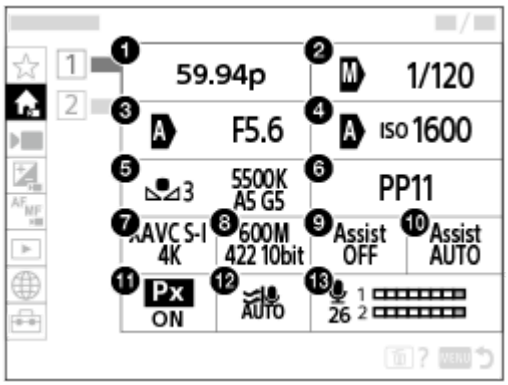

1. Rec Frame Rate/ S&Q Rec Frame Rate (when shooting slow-motion/quick-motion movies)
2. Tv Auto/Manual Switch/Shutter Speed * (when shooting movies in the flexible exposure mode)
3. Av Auto/Manual Switch/Aperture (when shooting movies in the flexible exposure mode)
4. ISO Auto/Manual Set/ISO (when shooting movies in the flexible exposure mode)
5. White Balance
6. Picture Profile
7. File Format
8. Record Setting/ S&Q Record Setting (when shooting slow-motion/quick-motion movies)
9. Gamma Display Assist
10. Gamma Disp. Assist Typ.
11. Px Proxy Recording
12. Wind Noise Reduct.
13. Audio Rec Level

* When [Shutter Mode] is set to [Angle], the shutter angle is displayed (if the camera's system software (firmware) is Ver.5.00 or later).

Main2

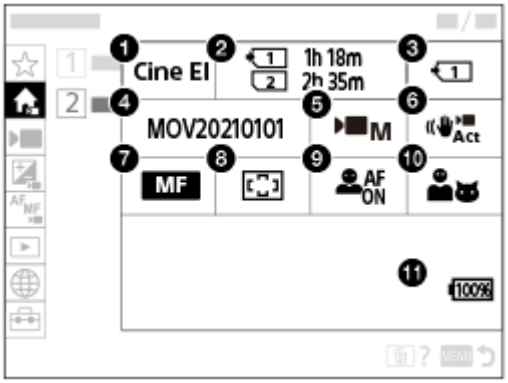

1. Log Shooting Setting
2. Format
3. Recording Media
4. File Settings
5. Exposure Mode
6. SteadyShot
7. Focus Mode
8. Focus Area
9. Face/Eye Prior. in AF
10. Face/Eye Subject
11. Remaining battery level

Main menu for shooting still images

Main1

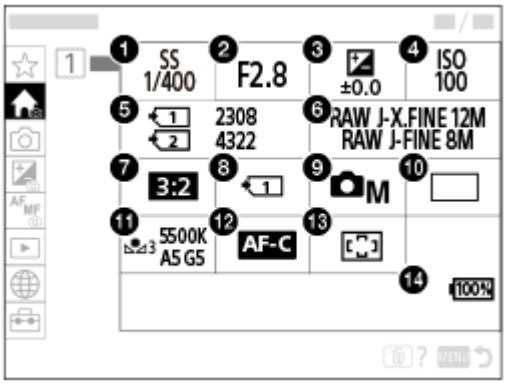

1. Shutter Speed *
2. Aperture *
3. Exposure Comp.
4. ISO
5. Format
6. Image Quality Settings

7. Aspect Ratio

8. Rec. Media Settings

9. Shoot Mode

10. Drive Mode

11. White Balance

12. Focus Mode

13. Focus Area

14. Remaining battery level

* When the shooting mode is [Program Auto], the shutter speed and aperture value are displayed in the same area. You can perform Program Shift by selecting the area.

Hint

- If you assign the [Display Main Menu] function to the desired key using the custom key settings, you can also open the Main menu by pressing the assigned key.
- You can open the setting screens by touching the icons on the main menu when [Touch Operation] is set to [On].

Related Topic

- Using the menu
- Assigning frequently used functions to buttons and dials (Custom Key/Dial Set.)

5-043-036-16(1) Copyright 2022 Sony Corporation

Using the function menu

If you press the Fn (function) button during shooting, a menu containing frequently used functions such as the audio recording level and focus mode will appear on the screen (function menu). This allows you to access functions quickly.

Example of function menu

The displayed items differ depending on the camera status.

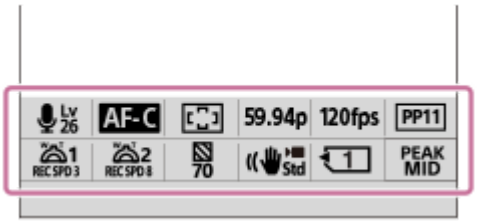

Hint

- Use MENU → (Setup) → [Operation Customize] →[Fn Menu Settings] to register your favorite functions in the function menu. You can register 12 functions for shooting still images and 12 functions for shooting movies separately.
- When [Touch Operation] is set to [On], touch operations on the menu screen are possible.
- When [Touch Operation] is set to [On], you can also open [Fn Menu Settings] by holding down the icon in the function menu.
- When [Swipe Up] is set to [Open the Fn Menu], the function menu can be displayed using touch operations by swiping the shooting screen upward quickly.
- Swipe downward from the area outside of the function menu or tap the area outside of the function menu to close the function menu.

1. **Press the Fn (Function) button.**

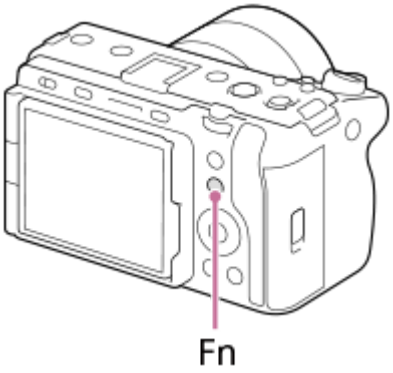

2. **Press the top/bottom/left/right side of the control wheel to select a function to set.**

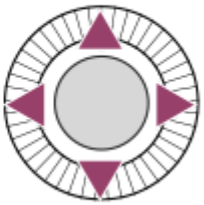

3 **Turn the front dial to select the desired setting, and press the center of the control wheel.**

- Some functions can be fine-tuned using the rear dial.

To adjust settings from the dedicated setting screens

Select the icon for the desired function and then press the center of the control wheel. The dedicated setting screen for the function will appear. Follow the operating guide **(A)** to adjust settings.

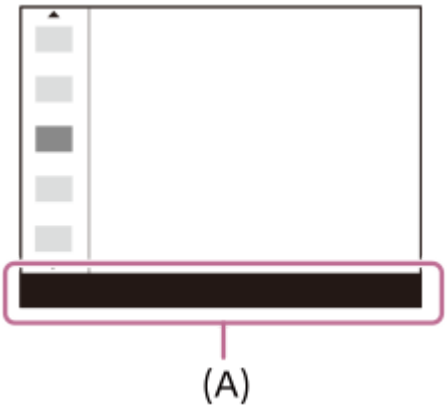

Related Topic

- Fn Menu Settings
- Swipe Up

5-043-036-16(1) Copyright 2022 Sony Corporation

Interchangeable Lens Digital Camera
ILME-FX30

Using the custom buttons

If you assign frequently used functions to the custom buttons (1-6) in advance, you can quickly call up those functions simply by pressing the buttons during shooting or playback.
Recommended functions are assigned to the custom buttons by default.

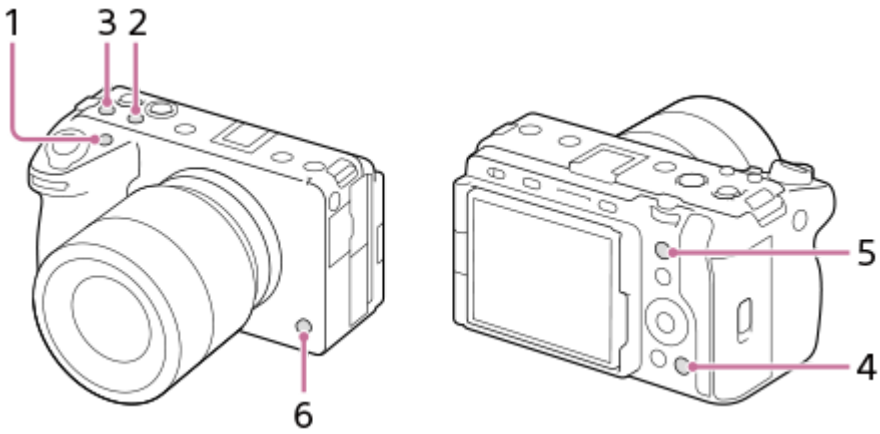

To check/change the functions of the custom buttons

You can confirm the function currently assigned to each custom button via the following procedure.
MENU → (Setup) → [Operation Customize] → [Custom Key/Dial Set.], [Custom Key/Dial Set.] or [Custom Key Setting].
If you want to change the function of the custom button, press the center of the control wheel while the custom button is selected. The functions that can be assigned to that button will appear. Select your desired function.

Related Topic

- Assigning frequently used functions to buttons and dials (Custom Key/Dial Set.)

5-043-036-16(1) Copyright 2022 Sony Corporation

Interchangeable Lens Digital Camera
ILME-FX30

Using the DISP (Display Setting) button

By pressing the DISP (Display Setting) button, you can change the content displayed on the screen during shooting and playback. The display switches each time the DISP button is pressed.

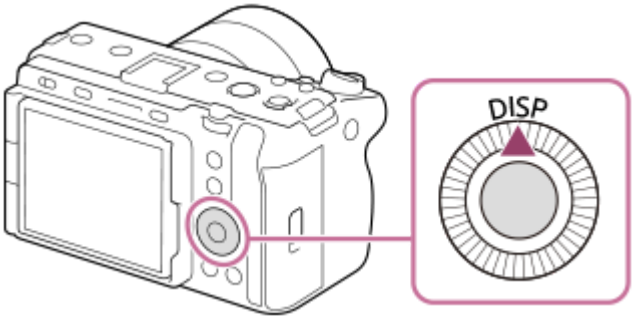

During shooting

Display All Info. → No Disp. Info. → Histogram → Level → Display All Info.

When shooting movies:

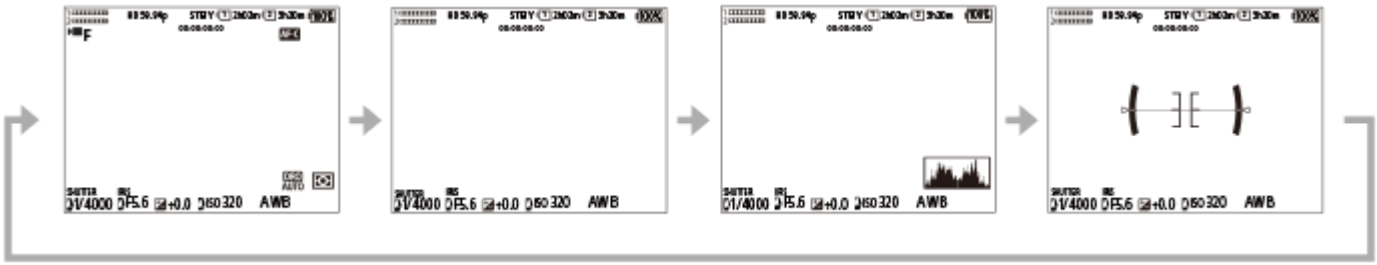

When shooting still images:

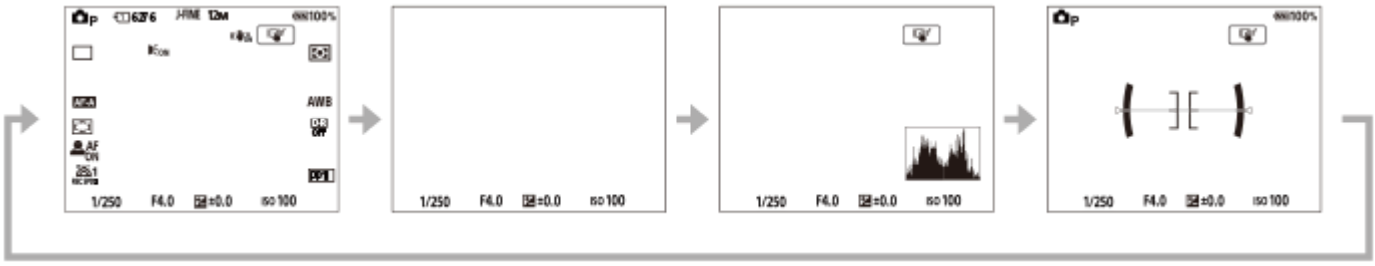

During playback

Display Info. → Histogram → No Disp. Info. → Display Info.

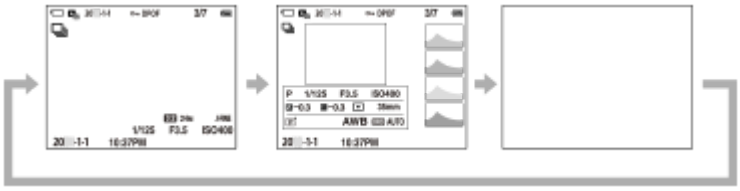

- If the image has an overexposed or underexposed area, the corresponding section will blink on the histogram display (overexposed/underexposed warning).

- The settings for playback are also applied in [Auto Review].

Note

- The displayed contents and their position shown in the illustration are just a guideline, and may differ from the actual display.

Related Topic

- DISP (Screen Disp) Set

5-043-036-16(1) Copyright 2022 Sony Corporation

Using the Delete button

You can delete an image currently being displayed by pressing the 🗑 (Delete) button.

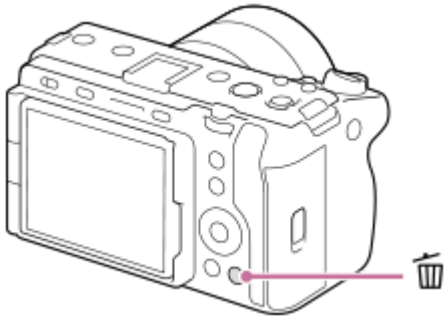

- When a confirmation message appears after you press the 🗑 (Delete) button, use the control wheel to select [Delete] and press the center.
- You can also delete two or more images at once.
  Select MENU → ▶ (Playback) → [Delete] → [Delete]. Then, select the images you want to delete.

Hint

- If you set MENU → ▶ (Playback) → [Delete] → [🗑 Delete pressing twice] to [On], you can delete images by pressing the 🗑 (Delete) button twice in a row.
- Other than the single-image playback screen, you can also use the 🗑 (Delete) button for the following operations.
  - Custom Key
  - In-Camera Guide

Related Topic

- Deleting multiple selected images (Delete)
- Delete confirm.
- Delete pressing twice
- Using the custom buttons
- In-Camera Guide

5-043-036-16(1) Copyright 2022 Sony Corporation

Using the front dial and rear dial

You can use the front dial **(A)** or rear dial **(B)** to quickly change the setting values in the following cases:

- When you want to adjust the aperture value or shutter speed.
- When you want to change the camera settings during shooting.

During playback, you can turn the dials to browse images.

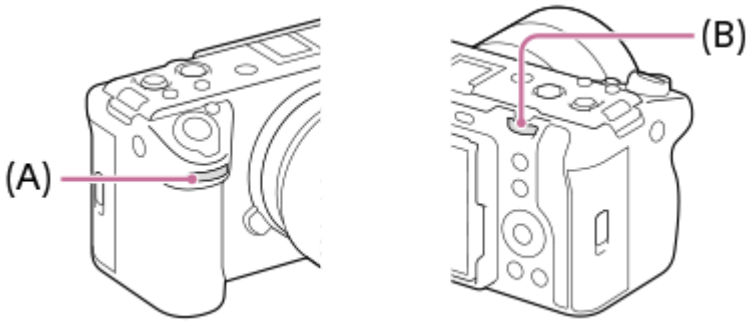

(A): Front dial
(B): Rear dial

Hint

- You can use [Custom Key/Dial Set.]/[Custom Key/Dial Set.] to assign the desired functions to each dial.
- You can also use the [My Dial Settings] function to assign your desired functions to the dials, and recall those functions when required.

Related Topic

- Aperture Priority
- Shutter Priority
- Manual Exposure
- Exposure Ctrl Type
- Changing the function of the dial temporarily (My Dial Settings)
- Assigning frequently used functions to buttons and dials (Custom Key/Dial Set.)
- Av/Tv Rotate

5-043-036-16(1) Copyright 2022 Sony Corporation

Using the keyboard

When manual character entry is required, a keyboard is displayed on the screen. For examples of functions that use the keyboard, see “Related Topic” at the bottom of this page.

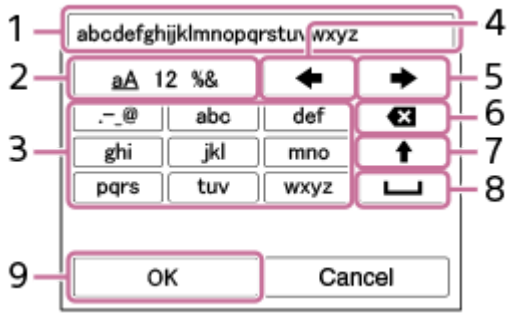

1. **Input box**
   The characters you entered are displayed.
2. **Switch character types**
   Each time you press this key, the character type will switch between alphabet letters, numerals and symbols.
3. **Keyboard**
   Each time you press this key, the characters corresponding to that key will be displayed one-by-one in order. To switch letters from lower to upper case, press ↑ (Up arrow).
4. ← (Left arrow)
   Moves the cursor in the input box to the left.
5. → (Right arrow)
   Moves the cursor in the input box to the right. This key is also used to finalize the input of a character being edited and move to the next character.
6. ⌫ (Delete)
   Deletes the character preceding the cursor.
7. ↑ (Up arrow)
   Switches a letter to upper or lower case.
8. ␣ (Space)
   Enters a space.
9. **OK**
   Press this key after entering characters to finalize the entered characters.

The procedure for entering alphabetic characters is explained below.

1. **Use the control wheel to move the cursor to the desired key.**
   - Each time you press the center of the control wheel, the characters will change
   - To switch the letter to upper or lower case, press ↑ (Up arrow).
2. **When the character that you want to enter appears, press → (Right arrow) to confirm the character.**
   - Make sure to confirm one character at a time. Unless a character is confirmed, you cannot enter the next character.
   - Even if you do not press → (Right arrow), the entered character will be automatically confirmed after several seconds.
3. **After you finish entering all characters, press [OK] to finalize the entered characters.**

- To cancel input, select [Cancel].

Related Topic

- Copyright Info
- Access Point Set.
- Wired LAN (USB-LAN)
- Edit Device Name

5-043-036-16(1) Copyright 2022 Sony Corporation

In-Camera Guide

The [In-Camera Guide] displays descriptions of MENU items, Fn (Function) items, and settings.

1. **Select the MENU or Fn item for which you want to see a description, and then press the 🗑 (Delete) button (A).**

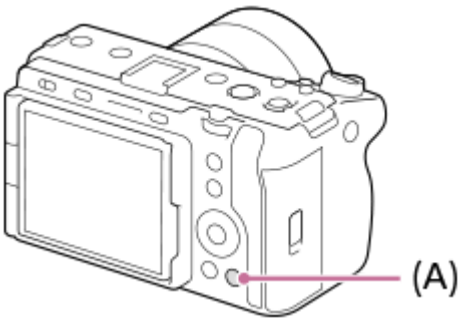

The descriptions of the item are displayed.

5-043-036-16(1) Copyright 2022 Sony Corporation

Interchangeable Lens Digital Camera
ILME-FX30

Inserting/removing the battery pack

1. **Slide the switch on the battery cover to open the cover.**

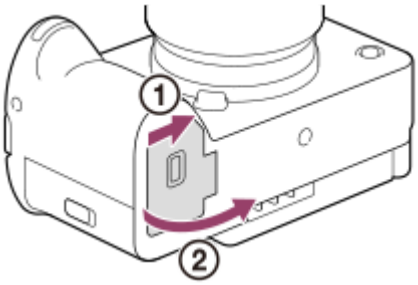

2. **Insert the battery pack while pressing the lock lever (A) with the tip of the battery until the battery locks into place.**

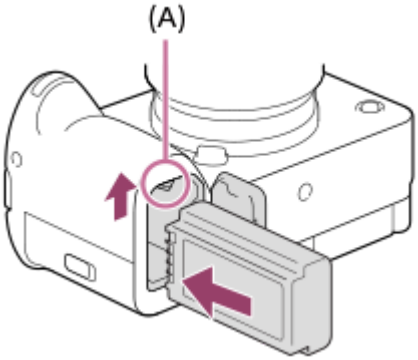

3. **Close the cover and slide the switch to the LOCK side.**

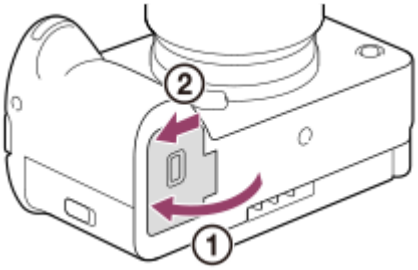

To remove the battery pack

Make sure that the access lamp is not lit, and turn off the camera. Then, slide the lock lever **(A)** and remove the battery pack. Be careful not to drop the battery pack.

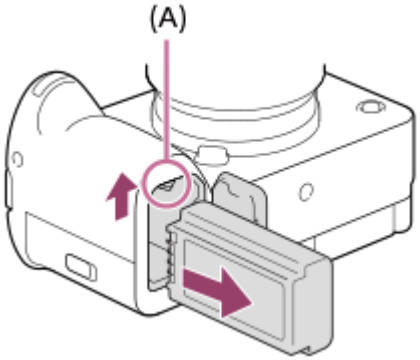

Related Topic

- Charging the battery pack using the AC Adaptor (supplied in some countries/regions)
- Charging the battery with a commercially available AC adaptor or mobile battery
- Notes on the battery pack and charging the battery

5-043-036-16(1) Copyright 2022 Sony Corporation

Charging the battery pack using the AC Adaptor (supplied in some countries/regions)

1. **Turn off the camera.**

2. **With the battery pack inserted into the camera, connect the camera to the AC Adaptor (supplied in some countries/regions) using the USB cable and connect the AC Adaptor to a wall outlet (wall socket).**

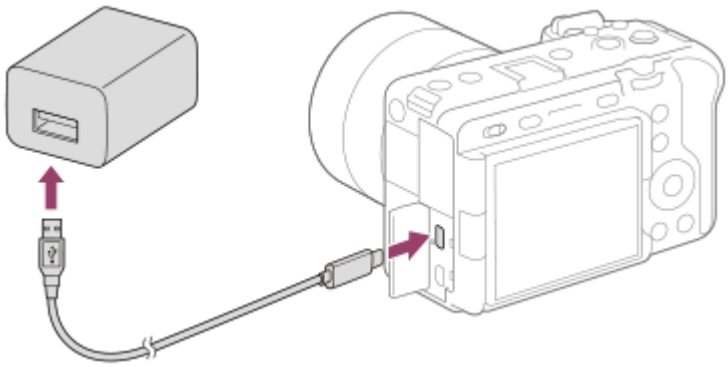

Charge lamp on the camera (orange)
Lit: Charging
Off: Charging finished
Flashing: Charging error or charging paused temporarily because the camera is not within the proper temperature range

- Charging time (Full charge): The charging time is approximately 255 min.
- The above charging time applies when charging a fully depleted battery pack at a temperature of 25 °C (77 °F). Charging may take longer depending on conditions of use and circumstances.
- The charge lamp turns off when charging is completed.
- If the charge lamp lights up and then immediately turns off, the battery pack is fully charged.

Note

- When you use an AC adaptor, use one with a rated output of 1.5 A or higher.
- USB charging is not possible from the Multi/Micro USB terminal. Use the USB Type-C terminal to charge the battery pack.
- Use a nearby wall outlet (wall socket) when using the AC Adaptor/Battery Charger. If any malfunction occurs, disconnect the plug from the wall outlet (wall socket) immediately to disconnect from the power source. If you use the product with a charge lamp, note that the product is not disconnected from the power source even when the lamp turns off.
- If you turn on the camera, power will be supplied from the wall outlet (wall socket) and you will be able to operate the camera. However, the battery pack will not be charged.
- Use the USB cable (supplied) or a USB-standard cable.
- Before charging, be sure to also read “Notes on the battery pack and charging the battery.”

Related Topic

- Notes on the battery pack and charging the battery

- Using the AC Adaptor/battery charger abroad

5-043-036-16(1) Copyright 2022 Sony Corporation

Charging the battery with a commercially available AC adaptor or mobile battery

You can use a USB cable to charge from an external power source, such as a commercially available USB AC adaptor or mobile battery.
When a device compatible with USB-PD (USB Power Delivery) is connected to the camera, fast charging is possible.

1. **Turn off the camera, and connect an external power source to the USB Type-C terminal on the camera.**

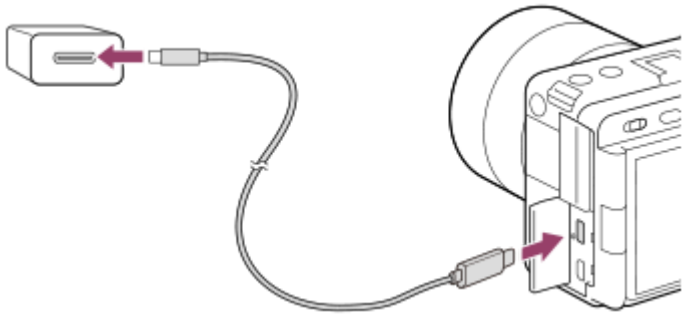

Charge lamp on the camera (orange)
Lit: Charging
Off: Charging finished
Flashing: Charging error or charging paused temporarily because the camera is not within the proper temperature range

- The charge lamp turns off when charging is completed.
- If the charge lamp lights up and then immediately turns off, the battery pack is fully charged.

Note

- USB charging is not possible from the Multi/Micro USB terminal. Use the USB Type-C terminal to charge the battery pack.
- If the product is connected to a laptop computer that is not connected to a power source, the laptop battery level decreases. Do not leave the product connected to a laptop computer for an extended period of time.
- Do not turn on/off or restart the computer, or wake the computer from sleep mode when a USB connection has been established between the computer and the camera. Doing so may cause a malfunction. Before turning on/off or restarting the computer, or waking the computer from sleep mode, disconnect the camera from the computer.
- Charging cannot be guaranteed with a custom-built computer, modified computer, or a computer connected through a USB hub.
- The camera may not operate correctly when other USB devices are used at the same time.
- When you use an AC adaptor, use one with a rated output of 1.5 A or higher.
- We recommend using a USB-PD device that is compatible with an output of 9V/3A or 9V/2A.
- Before charging, be sure to also read “Notes on the battery pack and charging the battery.”

Related Topic

- Inserting/removing the battery pack
- Notes on the battery pack and charging the battery

5-043-036-16(1) Copyright 2022 Sony Corporation

Using the AC Adaptor/battery charger abroad

You can use the battery charger (sold separately) and the AC Adaptor (supplied in some countries/regions) in any country or region where the power supply is within 100 V to 240 V AC and 50 Hz/60 Hz.
Depending on the country/region, a converting plug adaptor may be needed to connect to a wall outlet (wall socket). Consult a travel agency, etc., and prepare one in advance.

Note

- Do not use an electronic voltage transformer as doing so may cause a malfunction.

5-043-036-16(1) Copyright 2022 Sony Corporation

Supplying power from a wall outlet (wall socket)

Use an AC adaptor to shoot and play back images while power is supplied from a wall outlet (wall socket). This conserves the camera's battery power. Battery consumption can be reduced even further by connecting a device compatible with USB-PD (USB Power Delivery) to the camera.

1. **Insert a sufficiently charged battery pack into the camera.**
   - The camera will not activate if there is no remaining battery. Insert a sufficiently charged battery pack into the camera.
2. **Connect the USB cable to the USB Type-C terminal on the camera.**
3. **Connect to a wall outlet (wall socket) using an AC adaptor.**
4. **Turn on the camera.**
   - An icon ( ) indicating that USB power is being supplied will appear on the monitor, and power supply will start.

Note

- USB power cannot be supplied from the Multi/Micro USB Terminal. Use the USB Type-C terminal to supply power.
- As long as the power is on, the battery pack will not be charged even if the camera is connected to the AC Adaptor.
- Under certain conditions, power may be supplied from the battery pack supplementarily even if you are using the AC adaptor.
- Do not remove the battery pack while power is supplied from a wall outlet (wall socket). If you remove the battery pack, the camera will be turned off.
- Only connect the USB cable to the camera or disconnect the USB cable from the camera while the camera is turned off.
- Depending on the camera and battery temperature, the continuous recording time may be shortened while power is supplied from a wall outlet (wall socket). The area around the terminal may become hot. Be careful when handling it.
- When using a mobile charger as a power source, confirm that it is fully charged before use. Also, be careful of the remaining power on the mobile charger during use.
- Operation cannot be guaranteed with all external power supplies.

Related Topic

- Inserting/removing the battery pack

5-043-036-16(1) Copyright 2022 Sony Corporation

Interchangeable Lens Digital Camera
ILME-FX30

Inserting/removing a memory card

Explains how to insert a memory card (sold separately) to the camera. You can use CFexpress Type A memory cards and SD memory cards with this camera.

1. **Slide the switch on the memory card cover to open the cover.**

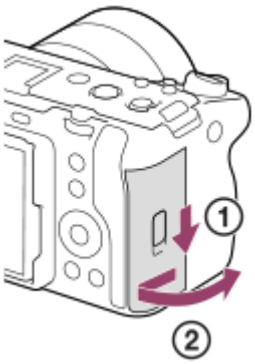

2. **Insert the memory card into the slot 1.**

- When using two memory cards, insert the second one into the slot 2.
- Both Slot 1 and Slot 2 support CFexpress Type A memory cards and SD memory cards.
- In the default settings, images are recorded on the memory card in Slot 1.
- Insert a CFexpress Type A memory card with the label facing the monitor, and an SD memory card with the terminal facing the monitor. Insert the card until it clicks into place.

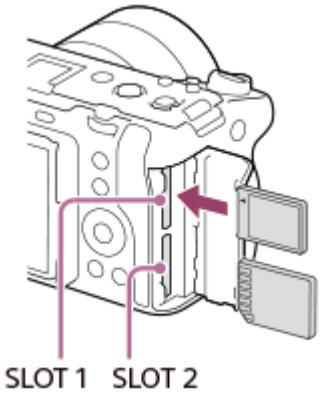

3. **Close the cover.**

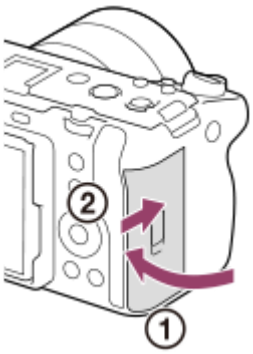

Hint

- When you use a memory card with the camera for the first time, it is recommended that you format the card on the camera for more stable performance of the memory card.
- You can change the memory card slot for recording by selecting MENU → (Shooting) → [Media] → [Rec. Media Settings] → [Recording Media] or [Recording Media]. The Slot 1 is used in the default settings.
- To record the same image on two memory cards at the same time or to sort recorded images onto two memory card slots by the image type (still image/movie), select MENU → (Shooting) → [Media] → [Rec. Media Settings], and then change the settings of [Recording Media] or [Recording Media].

To remove the memory card

Open the memory card cover and make sure that the access lamp **(A)** is not lit, then push in the memory card lightly once to remove it.

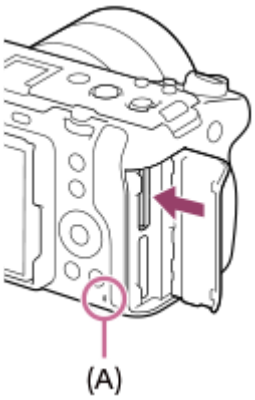

Related Topic

- Memory cards that can be used
- Notes on memory card
- Format
- Rec. Media Settings (still image/movie): Recording Media (still image)
- Rec. Media Settings (still image/movie): Recording Media (movie)
- Selecting which memory card to play back (Select Playback Media)

5-043-036-16(1) Copyright 2022 Sony Corporation

Interchangeable Lens Digital Camera
ILME-FX30

Attaching/removing a lens

Turn off the camera before attaching or removing the lens.

1. **Remove the body cap (A) from the camera and the rear lens cap (B) from the rear of the lens.**

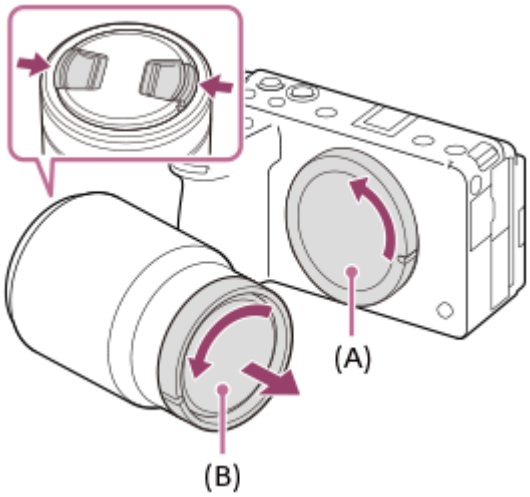

- It is recommended that you attach the front lens cap when you have done shooting.

2. **Mount the lens by aligning the two white index marks (mounting indexes) on the lens and camera.**

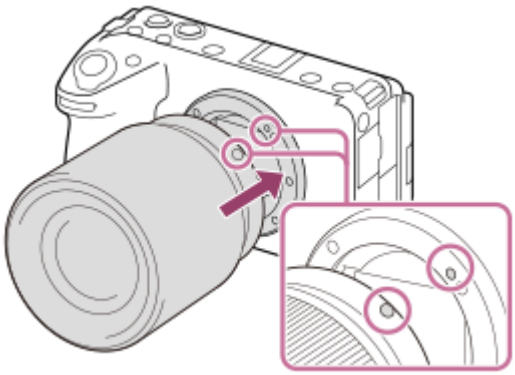

- Hold the camera with the lens mount facing down to prevent dust and debris from entering the camera.

3. **While pushing the lens lightly toward the camera, turn the lens slowly in the direction of the arrow until it clicks into the locked position.**

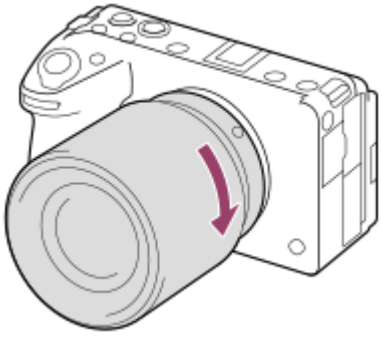

- Be sure to hold the lens straight when attaching it.

To remove the lens

Keep pressing the lens release button **(A)** and turn the lens in the direction of the arrow until it stops.
After removing the lens, attach the body cap to the camera and the lens caps to the front and rear of the lens to prevent dust and debris from entering the camera and lens.

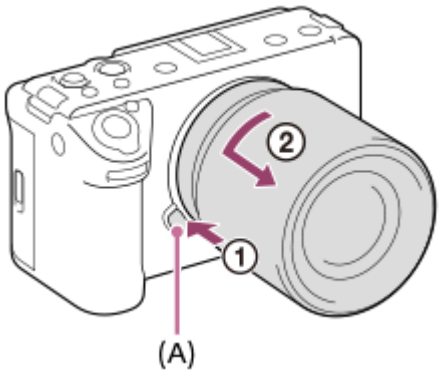

Lens hood

We recommend that you use the lens hood to prevent light outside the shooting frame from affecting the image. Attach the lens hood so that the indexes on the lens and lens hood are aligned.
(There may be no lens hood index on some lenses.)

Note

- When attaching/removing the lens, work quickly in a dust-free location.
- Do not press the lens release button when attaching a lens.
- Do not use force when attaching a lens.
- A Mount Adaptor (sold separately) is required to use an A-mount lens (sold separately). When using the Mount Adaptor, refer to the operating manual supplied with the Mount Adaptor.
- When you use a lens with a tripod socket, attach a tripod to the tripod socket of the lens to help balance the weight of the lens.
- When carrying the camera with a lens attached, hold both the camera and the lens firmly.
- Do not hold the part of the lens that is extended for zoom or focus adjustment.
- Attach the lens hood properly. Otherwise, the lens hood may not have any effect or may be partially reflected in the image.

Related Topic

- Mount Adaptor

5-043-036-16(1) Copyright 2022 Sony Corporation

Interchangeable Lens Digital Camera
ILME-FX30

Attaching the supplied XLR handle unit (only with ILME-FX30)

By attaching the XLR handle unit, you can use the functions of the XLR adaptor.

1. **Remove the shoe cap, and then attach the XLR handle unit to the Multi Interface Shoe.**

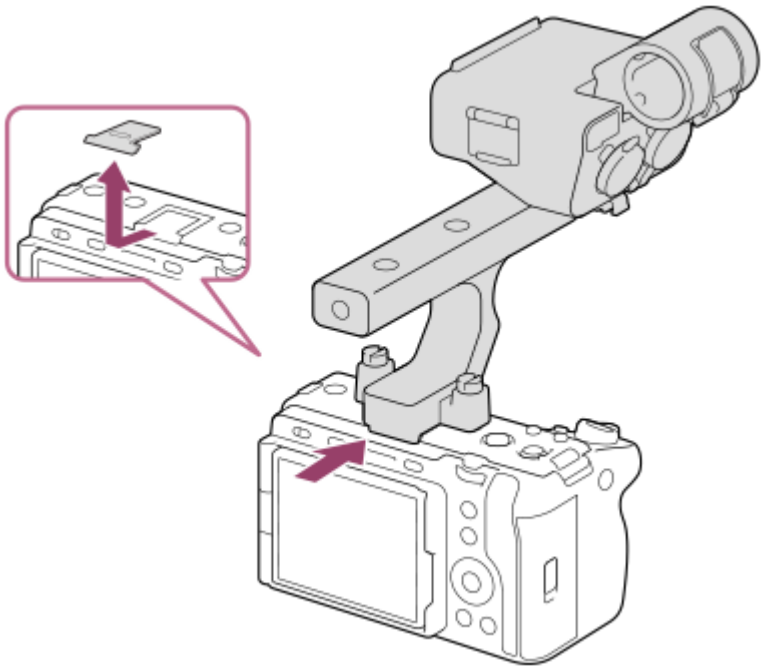

2. **Tightly fix the screws on either side by using a coin, etc.**

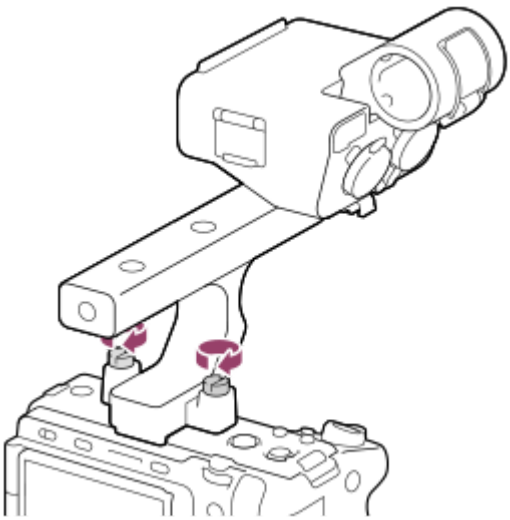

Note

- Turn off the camera before attaching/removing the handle.
- When attaching the handle to the camera, fasten the two handle-attachment screws securely. Using the handle without fastening the handle-attachment screws may damage the Multi Interface Shoe terminal or cause the camera to fall off.

Related Topic

- Recording audio using the XLR adaptor of the supplied handle (only with the ILME-FX30)

5-043-036-16(1) Copyright 2022 Sony Corporation

Interchangeable Lens Digital Camera
ILME-FX30

Performing initial setup for the camera

By establishing a Bluetooth connection (pairing) between the camera and a smartphone and using the smartphone application Creators' App, you can perform initial camera settings such as date and time settings from the smartphone (when the camera's system software (firmware) is Ver.2.00 or later). Install Creators' App from your smartphone's application store. If the application is already installed, be sure to update it to the latest version.
You can also install Creators' App by scanning the QR Code displayed on the screen of the camera using your smartphone.
For details on Creators' App, refer to the following website.
https://www.sony.net/ca/

1. **Set the power switch to "▌" (On) to turn on the camera.**

2. **Select the desired language and then press the center of the control wheel.**
   - A privacy notice screen will appear (if the camera's system software (firmware) is Ver.6.00 or later). Follow the on-screen instructions.
   - Read the notice regarding biometrics carefully by opening the link provided on the privacy notice screen.

3. **Follow the instructions on the camera screen to connect the camera with your smartphone.**
   - Launch Creators' App on your smartphone to connect the camera with your smartphone.
   - If you do not connect a smartphone, the area/date/time setting screen will appear.
   - To connect your smartphone to the camera after the initial setup, select MENU → (Network) → [Cnct./Remote Sht.] → [Smartphone Connection].

4. **Perform initial camera setup on the Creators' App screen.**
   - Follow the instructions on the screen to set the following items.
     - Date and time / Display format
     - Auto Power OFF Temp.
     - Device name

     You can change these settings later from the camera menu.

On maintaining the date and time

This camera has an internal rechargeable backup battery for maintaining the date and time and other settings regardless of whether the power is turned on or off, or whether the battery pack is charged or discharged.
To charge the internal backup battery, insert a charged battery pack into the camera, and leave the product for 24 hours or more with the power turned off.
If the clock resets every time the battery pack is charged, the internal rechargeable backup battery may be worn out. Consult your service facility.

Hint

- By connecting the camera and a smartphone via the Bluetooth function, you can operate the camera using the smartphone and transfer images from the camera to the smartphone.

Note

- If the date and time setting is canceled halfway, the setting screen for the date and time appears every time you turn on the camera.
- The built-in clock of the camera may exhibit time errors. Adjust the time at regular intervals.
- When establishing a Bluetooth connection, only pair with trusted devices. Avoid unsolicited pairing requests or connections to unknown devices.
- Turn off the Bluetooth function when not in use.
- Check your paired devices regularly and delete any unnecessary ones.

Related Topic

- Pairing the camera with a smartphone (Smartphone Connection)
- Area/Date/Time Setting
- Auto Power OFF Temp.
- Edit Device Name
- WPS Push
- Access Point Set.

5-043-036-16(1) Copyright 2022 Sony Corporation

Confirmation before shooting

This section introduces useful settings and functions that you should know when using the camera. We recommend that you confirm these settings and functions before using the camera.
From each item name listed below, you can jump to the page explaining the respective functions.

Preparing a memory card for use with this camera

- Format
- Recover Image DB (still image/movie)

Selecting a memory card for recording

- Rec. Media Settings (still image/movie): Recording Media (still image)
- Rec. Media Settings (still image/movie): Recording Media (movie)
- Rec. Media Settings (still image/movie): Auto Switch Media

Preventing accidental failure to insert a memory card

- Release w/o Card

Selecting a memory card for playback

- Selecting which memory card to play back (Select Playback Media)

Setting whether camera operating sounds are generated

- Audio signals

Making it easy to check whether the camera is on standby or recording when set to a movie mode

- Emphasized REC Display

Resetting shooting settings or resetting all camera settings

- Setting Reset

5-043-036-16(1) Copyright 2022 Sony Corporation

Interchangeable Lens Digital Camera
ILME-FX30

Shooting movies

You can set the recording format and exposure and record movies by using the dedicated menu items for movies.

1. **Press the MODE (Mode) button, use the control wheel to select [Movie], and then press the center.**

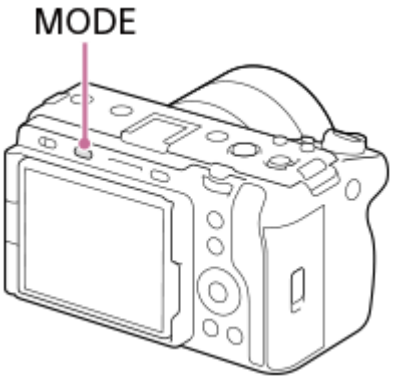

2. **Press the REC (Recording) button to start recording.**

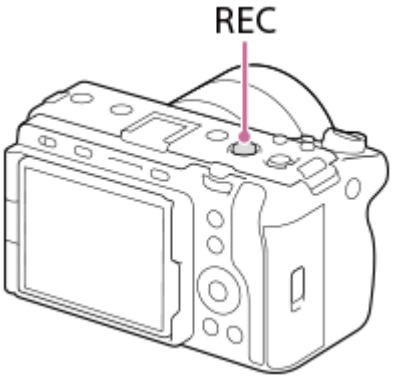

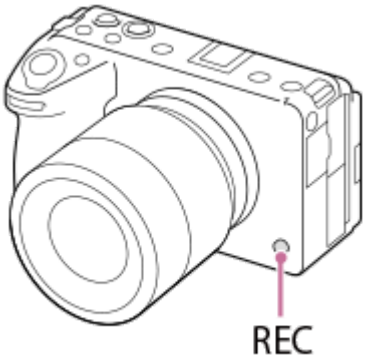

3. **Press the REC button again to stop recording.**

To select the recording format (File Format)

The resolution and degree of compatibility vary depending on the recording format (XAVC HS 4K/XAVC S 4K/XAVC S HD/XAVC S-I 4K/XAVC S-I HD/XAVC S-I DCI 4K*). Select the format in accordance with the purpose of the movie to be shot.

* When the camera's system software (firmware) version is Ver.2.00 or later

To select the frame rate or image quality (Movie Settings)

The frame rate determines the smoothness of motion in movies. ([Movie Settings] → [Rec Frame Rate])
The image quality changes with the bit rate. ([Movie Settings] → [Record Setting])
If the bit rate is high, the amount of information will increase and you can shoot high-quality movies. However, this will result in a larger volume of data.
Select the frame rate and bit rate according to your preference and purpose.

To adjust the exposure (Exposure Ctrl Type/Exposure mode)

When [Exposure Ctrl Type] is set to [P/A/S/M Mode], select the exposure mode using the shutter speed and aperture value combination in the same way as when shooting a still image.
When [Exposure Ctrl Type] is set to [Flexible Exp. Mode], you can set the shutter speed, aperture value, and ISO sensitivity automatically or manually.

To select the focusing method (Focus Mode/ Focus Area)

Select AF-C (Continuous AF) or MF (Manual Focus) for [Focus Mode]. You can specify the focus area by setting [Focus Area].

Even during shooting with manual focus, you can temporarily switch to auto focus in the following ways.

- Press the custom key to which [AF On] is assigned, or press the shutter button halfway.
- Press the custom key to which [Eye AF] is assigned.
- Touch the subject on the monitor.

To record movie audio in 4 channels

Attach the XLR handle unit (supplied only with the ILME-FX30) or a genuine Sony accessory that supports 4-channel and 24-bit audio recording to the Multi Interface Shoe of the camera.

Hint

- You can also assign the start/stop movie recording function to a preferred key.
- You can focus quickly while shooting movies by pressing the shutter button halfway down. (The sound of auto focus operation may be recorded in some cases.)
- You can change the settings for ISO sensitivity, exposure compensation, and focus area while shooting movies.
- The sounds of the camera and lens in operation may be recorded during movie shooting. To prevent sounds from being recorded, set [Audio Recording] to [Off].
- To prevent the operating sound of the zoom ring from being recorded when a power zoom lens is used, we recommend recording movies using the zoom lever of the lens. When moving the zoom lever of the lens, be careful not to flip the lever.

Note

- An icon indicating that data is being written is displayed after shooting. Do not remove the memory card while the icon is displayed.
- You cannot start recording a movie while writing data. Wait until data writing is completed and “STBY” is displayed before recording a movie.
- When playing back an XAVC S-I DCI 4K movie recorded with this camera on another camera of the same model, check the system software (firmware) version of the camera. If the system software version is earlier than Ver.2.00, XAVC S-I DCI 4K movies cannot be played back.
- If the (Overheating warning) icon appears, the temperature of the camera has risen. Turn the power off and cool the camera and wait until the camera is ready to shoot again.
- The temperature of the camera tends to rise when shooting movies continuously, and you may feel that the camera is warm. This is not a malfunction. Also, [Internal temp. high. Allow it to cool.] may appear. In such cases, turn the power off and cool the camera and wait until the camera is ready to shoot again.
- For the continuous shooting time of a movie recording, refer to “Recordable movie times.” When movie recording is finished, you can record another movie by pressing the REC button again. Recording may stop to protect the product, depending on the

temperature of the product or the battery.

Related Topic

- File Format (movie)
- Movie Settings (movie)
- Exposure Ctrl Type
- Auto/Manual Swt. Set.
- Movie: Exposure Mode
- Selecting the focus method (Focus Mode)
- Selecting the focus area (Focus Area)
- Shoe Audio Set.
- Assigning frequently used functions to buttons and dials (Custom Key/Dial Set.)
- REC w/ Shutter (movie)
- Audio Recording
- Recordable movie times

5-043-036-16(1) Copyright 2022 Sony Corporation

Interchangeable Lens Digital Camera
ILME-FX30

Shooting still images (Intelligent Auto)

This section describes how to shoot still images in the [Intelligent Auto] mode. In the [Intelligent Auto] mode, the camera automatically focuses and automatically determines the exposure based on the shooting conditions.

1. **Press the MODE (Mode) button, use the control wheel to select [Intelligent Auto], and press the center of the control wheel.**

   The shooting mode will be set to (Intelligent Auto).

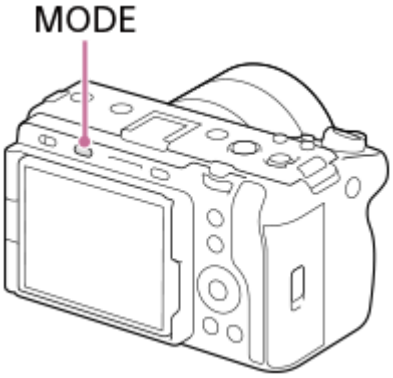

2. **Adjust the monitor angle, and hold the camera.**

3. **When a zoom lens is mounted, enlarge images by using the zoom lever or the zoom ring.**

4. **Press the shutter button halfway down to focus.**

   When the image is in focus, a beep sounds and the indicator (, etc.) lights up.

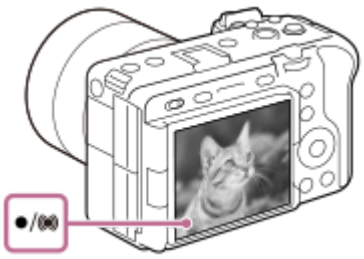

5. **Press the shutter button fully down.**

To select the focus mode yourself (Focus Mode / Focus Area)

Specifying a focus mode, such as selecting AF-S (Single-shot AF) for landscapes or still subjects and selecting AF-C (Continuous AF) for moving subjects, makes it easier to focus on the desired subject. You can also specify the focus position and range using [Focus Area].

Shooting while focusing on human eyes

The [Face/Eye Prior. in AF] function under [Face/Eye AF] is enabled in the default settings, so you can use the Eye AF function immediately.

To shoot images with the focus locked on the desired subject (Focus-lock)

When you focus on the subject, the focus is locked while the shutter button is pressed halfway down. Switch to the desired composition and press the shutter button all the way down to take the picture.

- You can lock the focus on non-moving subjects. Set [Focus Mode] to AF-S (Single-shot AF).
- Setting [Focus Area] to [Center Fix] makes it easier to focus on subjects located in the center of the screen.

Hint

- When the product cannot focus automatically, the focus indicator flashes and the beep does not sound. Either recompose the shot or change the focus mode or focus area settings. In [Continuous AF] mode, (focus indicator) lights up and the beep indicating that the focus has been achieved does not sound.

Note

- An icon indicating that data is being written is displayed after shooting. Do not remove the memory card while the icon is displayed. Doing so will prevent images from being recorded normally.

Related Topic

- Selecting the focus method (Focus Mode)
- Selecting the focus area (Focus Area)
- Playing back still images
- Auto Review (still image)

5-043-036-16(1) Copyright 2022 Sony Corporation

Interchangeable Lens Digital Camera
ILME-FX30

Finding functions from MENU

The displayed MENU items vary depending on the shooting mode. In the table below, the modes in which each MENU item is displayed are indicated by the still image/movie/S&Q icons.

: The menu item is displayed when the shooting mode is set to the still image shooting modes **(A)**.
: The menu item is displayed when the shooting mode is set to the movie recording modes **(B)**.
: The menu item is displayed when the shooting mode is set to either the still image shooting modes **(A)** or the movie recording modes **(B)**.

- When set to MR (MR Recall Camera Setting), the registered shooting mode is used.

(Main) tab

Shooting settings are displayed in a list. For details, refer to “Using the Main menu (shooting setting list).”

/ (Shooting) tab

Groups		Menu items
Image Quality/Rec		JPEG/HEIF Switch
		Image Quality Settings: File Format
		Image Quality Settings: JPEG Quality
		Image Quality Settings: HEIF Quality
		Image Quality Settings: JPEG Image Size
		Image Quality Settings: HEIF Image Size
		Aspect Ratio
		File Format
		Movie Settings
		FPS
		S&Q Settings
		Mode Settings
		Log Shooting Setting
		Px Proxy Settings
		High ISO NR
		HLG Still Image
		Color Space
		Lens Compensation
Media		Format
		Rec. Media Settings: Recording Media
		Rec. Media Settings: Recording Media
		Rec. Media Settings: Auto Switch Media
		Recover Image DB
		Display Media Info.
File		File/Folder Settings
		Select REC Folder
		Create New Folder
		IPTC Information
		Copyright Info
		Write Serial Number
		File Settings

Groups		Menu items
Shooting Mode		Exposure Mode
		S&Q Exposure Mode
		Exposure Ctrl Type
		MR Recall Camera Setting
		MR Camera Set. Memory
		MR Memory/Recall Media
		Reg. Custom Shoot Set
Drive Mode		Drive Mode
		Bracket Settings
		Interval Shoot Func.
Shutter/Silent		Silent Mode
		Release w/o Lens
		Release w/o Card
		Anti-flicker Set.
Audio Recording		Audio Recording
		Audio Rec Level
		Audio Out Timing
		Wind Noise Reduct.
		Shoe Audio Set.
TC/UB		Time Code Preset
		User Bit Preset
		Time Code Format
		Time Code Run
		Time Code Make
		User Bit Time Rec
Image Stabilization		SteadyShot
		SteadyShot
		SteadyShot Adjust.
		Focal Length

Groups		Menu items
Zoom		Zoom Range
		Zoom Lever Speed
		Custom Key Z. Speed
		Remote Zoom Speed
Shooting Display		Grid Line Display
		Grid Line Type
		Live View Display Set.
		Emphasized REC Display
Marker Display		Marker Display
		Center Marker
		Aspect Marker
		Safety Zone
		Guideframe
Shooting Option		Framing Settings

(Exposure/Color) tab

Groups		Menu items
Exposure		Shutter Mode
		Auto Slow Shutter
		ISO
		ISO Range Limit
		ISO AUTO Min. SS
		Base ISO
		Base ISO Switch EI
		Exposure Index
		Auto/Manual Swt. Set.
		ND Filter
Exposure Comp.		Exposure Comp.
		Exposure step
		Exposure Std. Adjust

Groups	S&Q	Menu items
Metering	S&Q	Metering Mode
	S&Q	Face Priority in Multi Metering
	S&Q	Spot Metering Point
	S&Q	AEL w/ Shutter
White Balance	S&Q	White Balance
	S&Q	Priority Set in AWB
	S&Q	Shutter AWB Lock
	S&Q	Shockless WB
Color/Tone	S&Q	D-Range Optimizer
	S&Q	Creative Look
	S&Q	Picture Profile
	S&Q	Select LUT
	S&Q	Manage User LUTs
Zebra Display	S&Q	Zebra Display
	S&Q	Zebra Level

AF/MF (Focus) tab

Groups	S&Q	Menu items
AF/MF	S&Q	Focus Mode
	S&Q	Priority Set in AF-S
	S&Q	Priority Set in AF-C
	S&Q	AF Tracking Sensitivity
	S&Q	AF w/ Shutter
	S&Q	Pre-AF
	S&Q	AF Transition Speed
	S&Q	AF Subj. Shift Sensitivity
	S&Q	AF Assist

Groups		Menu items
Focus Area		Focus Area
		Focus Area Limit
		Switch V/H AF Area
		Focus Area Color
		AF Area Registration
		Del. Regist. AF Area
		AF Area Auto Clear
		Area Disp. dur Tracking
		AF-C Area Display
		Phase Detect. Area
		Circ. of Focus Point
		AF Frame Move Amt
Face/Eye AF		Face/Eye Prior. in AF
		Face/Eye Subject
		Subject Sel. Setting
		Right/Left Eye Select
		Face/Eye Frame Disp.
		Face Memory
		Regist. Faces Priority
Focus Assistant		Focus Map
		Auto Magnifier in MF
		Focus Magnifier
		Focus Magnif. Time
		Initial Focus Mag.
		AF in Focus Mag.
		Initial Focus Mag.
Peaking Display		Peaking Display
		Peaking Level
		Peaking Color

(Playback) tab

Groups	S&Q	Menu items
Playback Target	S&Q	Select Playback Media
	S&Q	View Mode
Magnification	S&Q	Enlarge Image
	S&Q	Enlarge Initial Mag.
	S&Q	Enlarge Initial Position
Selection/Memo	S&Q	Protect
	S&Q	Rating
	S&Q	Rating Set(Custom Key)
	S&Q	Clip Flag
Delete	S&Q	Delete
	S&Q	Delete pressing twice
	S&Q	Delete confirm.
Edit	S&Q	Rotate
	S&Q	Copy
	S&Q	Photo Capture
	S&Q	JPEG/HEIF Switch
Viewing	S&Q	Cont. Play for Interval
	S&Q	Play Speed for Interval
	S&Q	Slide Show
Playback Option	S&Q	Image Index
	S&Q	Display as Group
	S&Q	Display Rotation
	S&Q	Focus Frame Display
	S&Q	Disp Specified Time Img.
	S&Q	Image Jump Setting

(Network) tab

Groups		Menu items
Cnct./Remote Sht.		Smartphone Connection
		Remote Shoot Function
		Select on Cam & Send
		Reset Transfer Status
		Cnct. while Power OFF
		Remote Shoot Setting
FTP Transfer		FTP Transfer Func.
Streaming		Network Streaming
		USB Streaming
Creators' Cloud		Cloud Connection
		Cloud Information
Wi-Fi		Wi-Fi Connect
		WPS Push
		Access Point Set.
		Wi-Fi Frequency Band *
		Display Wi-Fi Info.
		SSID/PW Reset
Bluetooth		Bluetooth Function
		Pairing
		Manage Paired Device
		Bluetooth Rmt Ctrl
		Disp Device Address
Wired LAN		LAN IP Address Setting
		Display Wired LAN Info.
USB-LAN/Tethering		USB-LAN Connection
		USB-LAN Disconnection
		Tethering Connection
		Tethering Disconnection

Groups		Menu items
Network Option		Airplane Mode
		Edit Device Name
		Import Root Certificate
		Access Authen. Settings
		Access Authen. Info
		Security(IPsec)
		Wi-Fi Direct Settings
		Reset Network Set.

* For some models only

(Setup) tab

Groups		Menu items
Area/Date		Language
		Area/Date/Time Setting
		NTSC/PAL Selector
Reset/Save Settings		Setting Reset
		Save/Load Settings
Operation Customize		Custom Key/Dial Set.
		Custom Key/Dial Set.
		Custom Key Setting
		Fn Menu Settings
		Different Set for Still/Mv
		Home (Lower Left)
		DISP (Screen Disp) Set
		REC w/ Shutter
		Zoom Ring Rotate
Dial Customize		Custom Key/Dial Set.
		Custom Key/Dial Set.
		My Dial Settings
		Av/Tv Rotate
		Lock Operation Parts

Groups	S&Q	Menu items
Touch Operation	S&Q	Touch Operation
	S&Q	Swipe Up
	S&Q	Touch Func. in Shooting
Accessibility *	S&Q	Screen Reader
Monitor	S&Q	Monitor Brightness
	S&Q	Display Quality
	S&Q	Monitor Flip Direction
Display Option	S&Q	TC/UB Disp. Setting
	S&Q	Gamma Display Assist
	S&Q	Gamma Disp. Assist Typ.
	S&Q	Display LUT
	S&Q	De-Squeeze Display
	S&Q	Remain Shoot Display
	S&Q	Auto Review
	S&Q	Display File Name
Power Setting Option	S&Q	Power Save Start Time
	S&Q	Auto Power OFF Temp.
Sound Option	S&Q	Volume Settings
	S&Q	4ch Audio Monitoring
	S&Q	Audio signals
USB	S&Q	USB Connection Mode
	S&Q	USB LUN Setting
	S&Q	USB Power Supply
External Output	S&Q	HDMI Resolution
	S&Q	HDMI Output Settings
	S&Q	HDMI Info. Display
	S&Q	CTRL FOR HDMI

Groups	S&Q	Menu items
Setup Option	S&Q	Video Light Mode
	S&Q	REC Lamp
	S&Q	Fan Control
	S&Q	Sensor Cleaning
	S&Q	Pixel Mapping
	S&Q	Version
	S&Q	Display Serial Number
	S&Q	Privacy Notice

* For some models only

(My Menu) tab

Groups	S&Q	Menu items
My Menu Setting	S&Q	Add Item
	S&Q	Sort Item
	S&Q	Delete Item
	S&Q	Delete Page
	S&Q	Delete All
	S&Q	Display From My Menu

Note

- The order in which the menu tabs are listed here differs from the actual display.

5-043-036-16(1) Copyright 2022 Sony Corporation

Contents of this chapter

The following table of contents lists the features described in this chapter (“Using the shooting functions”). From each item name, you can jump to the page describing the respective functions.

Selecting a shooting mode

- Exposure Ctrl Type
- Auto/Manual Swt. Set.
- Movie: Exposure Mode
- S&Q Motion: Exposure Mode
- Intelligent Auto
- Program Auto
- Aperture Priority
- Shutter Priority
- Manual Exposure
- Shutter Mode
- Auto Slow Shutter

Focusing

- Selecting the focus method (Focus Mode)
- Selecting the focus area (Focus Area)
- Tracking subject (Tracking function)
- Manual Focus
- Direct manual focus (DMF)

Face/Eye AF

- Focusing on human eyes
- Face/Eye Prior. in AF (still image/movie)
- Face/Eye Subject (still image/movie)
- Subject Sel. Setting (still image/movie)
- Right/Left Eye Select (still image/movie)
- Face/Eye Frame Disp. (still image/movie)
- Face Memory
- Regist. Faces Priority (still image/movie)

Using focusing functions

- Focus Standard
- Adjusting the focus area settings to the camera’s orientation (horizontal/vertical) (Switch V/H AF Area)
- Registering the current focus area (AF Area Registration)
- Deleting a registered AF Area (Del. Regist. AF Area)
- Focus Area Limit (still image/movie)
- Circ. of Focus Point (still image/movie)
- AF Frame Move Amt (still image/movie)
- Focus Area Color (still image/movie)
- AF Area Auto Clear
- Area Disp. dur Tracking
- AF-C Area Display
- Phase Detect. Area
- AF Tracking Sensitivity
- AF Transition Speed

- AF Subj. Shift Sensitivity
- AF Assist
- AF/MF Selector
- AF w/ Shutter
- AF On
- Focus Hold
- Pre-AF
- Priority Set in AF-S
- Priority Set in AF-C
- AF in Focus Mag.
- Auto Magnifier in MF
- Focus Magnifier
- Focus Magnif. Time (still image/movie)
- Initial Focus Mag. (movie)
- Initial Focus Mag. (still image)
- Focus Map
- Peaking Display

Adjusting the exposure/metering modes

- Exposure Comp. (still image/movie)
- Histogram display
- Exposure step (still image/movie)
- Exposure Std. Adjust (still image/movie)
- D-Range Optimizer (still image/movie)
- Metering Mode (still image/movie)
- Face Priority in Multi Metering (still image/movie)
- Spot Metering Point (still image/movie)
- ND Filter
- AE lock
- AEL w/ Shutter
- Zebra Display

Selecting the ISO sensitivity

- ISO (still image/movie)
- ISO Range Limit (still image/movie)
- ISO AUTO Min. SS

White balance

- White Balance (still image/movie)
- Capturing a standard white color to set the white balance (custom white balance)
- Priority Set in AWB (still image/movie)
- Shutter AWB Lock
- Shockless WB

Log shooting settings

- Log shooting
- Log Shooting Setting
- Select LUT
- Manage User LUTs
- Base ISO
- Base ISO Switch EI
- Exposure Index
- Display LUT

Adding effects to images

- Creative Look (still image/movie)
- Picture Profile (still image/movie)

Shooting with drive modes (self-timer/bracket)

- Drive Mode
- Self-timer(Single)
- Single Bracket
- Indicator during bracket shooting
- WB bracket
- DRO Bracket
- Bracket Settings

Interval Shoot Func.

Setting the image quality and recording format

- JPEG/HEIF Switch
- Image Quality Settings: File Format (still image)
- Image Quality Settings: JPEG Quality/HEIF Quality
- Image Quality Settings: JPEG Image Size/HEIF Image Size
- Aspect Ratio
- HLG Still Image
- Color Space
- File Format (movie)
- Movie Settings (movie)
- S&Q Mode Settings
- S&Q Settings
- FPS
- Proxy Settings
- Angle of view

Using touch functions

- Touch Operation
- Swipe Up
- Touch Func. in Shooting
- Focusing using touch operations (Touch Focus)
- Starting tracking with touch operations (Touch Tracking)
- Shooting with touch operations (Touch Shutter)

Shutter settings

- Silent Mode (still image/movie)
- Release w/o Lens (still image/movie)
- Release w/o Card
- Anti-flicker Set.

Using the zoom

- The zoom features available with this product
- Clear Image Zoom/Digital Zoom
- Zoom Range (still image/movie)
- Zoom Lever Speed (still image/movie)
- Custom Key Z. Speed (still image/movie)
- Remote Zoom Speed (still image/movie)
- About zoom scale
- Zoom Ring Rotate

Reducing blur

- SteadyShot (still image)
- SteadyShot (movie)
- SteadyShot Adjust. (still image/movie)

- SteadyShot focal length (still image/movie)

Lens Compensation (still image/movie)

Noise reduction

- High ISO NR

Setting the monitor display during shooting

- Auto Review (still image)
- Remain Shoot Display (still image)
- Grid Line Display (still image/movie)
- Grid Line Type (still image/movie)
- Live View Display Set.
- Aperture Preview
- Shot. Result Preview
- Bright Monitoring
- Emphasized REC Display
- Marker Display
- Gamma Display Assist
- Gamma Disp. Assist Typ.
- De-Squeeze Display

Recording movie audio

- Audio Recording
- Audio Rec Level
- Audio Out Timing
- Wind Noise Reduct.
- Shoe Audio Set.
- Recording audio using the XLR adaptor of the supplied handle (only with the ILME-FX30)

TC/UB settings

- TC/UB
- TC/UB Disp. Setting
- Matching the time code with other devices

Outputting RAW movies to an external RAW recorder

Framing shooting using remote shooting (Framing Settings)

Livestreaming video and audio

- Network Streaming (movie)
- USB Streaming (movie)

5-043-036-16(1) Copyright 2022 Sony Corporation

Exposure Ctrl Type

You can select the method for setting the exposure (shutter speed, aperture, and ISO sensitivity) when shooting movies.
[Flexible Exp. Mode] allows you to individually switch between the automatic and manual settings for aperture value, shutter speed, and ISO sensitivity.
[P/A/S/M Mode] allows you to select from the P/A/S/M modes in the same manner as the exposure mode for still images.

1. **MENU → (Shooting) → [Shooting Mode] → [Exposure Ctrl Type] → desired setting.**

Menu item details

P/A/S/M Mode:
Select the desired exposure mode from among [Program Auto], [Aperture Priority], [Shutter Priority], and [Manual Exposure].

Flexible Exp. Mode:
Sets the aperture value, shutter speed, and ISO sensitivity automatically (Auto) or manually (Manual).
You can switch between the automatic and manual settings using the assigned custom key, or change the aperture, shutter speed, and ISO sensitivity values by turning the front/rear dials and the control wheel.

Note

- Even if [Exposure Ctrl Type] is set to [Flexible Exp. Mode], when shooting a movie by pressing the REC (recording) button in a still image shooting mode, the movie will be shot in the exposure mode for still image shooting.

Related Topic

- Auto/Manual Swt. Set.
- Movie: Exposure Mode

5-043-036-16(1) Copyright 2022 Sony Corporation

Auto/Manual Swt. Set.

S&Q

When shooting movies, you can switch between the automatic and manual settings separately for aperture, shutter speed, and ISO sensitivity as you would with the exposure control system of a professional camera. Set [Exposure Ctrl Type] to [Flexible Exp. Mode] beforehand.

1. **MENU → (Exposure/Color) → [Exposure] → [Auto/Manual Swt. Set.] → desired setting item.**

Menu item details

Av Auto/Manual Switch:
Switches the aperture value between [Auto] and [Manual].

Tv Auto/Manual Switch:
Switches the shutter speed between [Auto] and [Manual].

ISO Auto/Manual Set:
Switches the ISO sensitivity between [Auto] and [Manual].

To switch between [Auto] and [Manual] using a custom keys

When [Exposure Ctrl Type] is set to [Flexible Exp. Mode], the following functions are assigned to the custom keys during movie recording.

- [L.PressAv Auto/Manual]: IRIS (Iris) button
- [L.PressTv Auto/Manual]: SHUTTER (Shutter) button on the control wheel
- [L.PressISO Auto/Manual]: ISO (ISO sensitivity) button

Each time you press and hold down the respective custom key, the aperture value, shutter speed, or ISO sensitivity switches between [Auto] and [Manual].
When [Manual] is selected, values can be locked by pressing the respective key. You can use this function to prevent the values from being unintentionally changed.
When [Auto] is selected, the proper exposure is set automatically, and when [Manual] is selected, the aperture value, shutter speed, and ISO sensitivity can be set with the following dials.

- Aperture value: front dial
- Shutter speed: control wheel
- ISO sensitivity: rear dial

Note

- When you set the aperture value with the lens aperture ring, the aperture ring value takes priority over the dial value.

Related Topic

- Exposure Ctrl Type
- Movie: Exposure Mode

5-043-036-16(1) Copyright 2022 Sony Corporation

Movie: Exposure Mode

S&Q

You can set the exposure mode for movie shooting. The setting you have selected will be applied when [Exposure Ctrl Type] is set to [P/A/S/M Mode].

1. **MODE (Mode) button → [Movie] → press the center of the control wheel.**
2. **MENU→ (Shooting) → [Shooting Mode] → [Exposure Mode] → desired setting.**
3. **Press the REC (recording) button to start recording.**
   - Press the REC button again to stop recording.

Menu item details

P Program Auto:
Allows you to shoot with the exposure adjusted automatically (both the shutter speed and the aperture value).

A Aperture Priority:
Allows you to shoot after adjusting the aperture value manually.

S Shutter Priority:
Allows you to shoot after adjusting the shutter speed manually.

M Manual Exposure:
Allows you to shoot after adjusting the exposure (both the shutter speed and the aperture value) manually.

Related Topic

- Exposure Ctrl Type

5-043-036-16(1) Copyright 2022 Sony Corporation

S&Q Motion: Exposure Mode

You can select the exposure mode for slow-motion/quick-motion shooting. The setting you have selected will be applied when [Exposure Ctrl Type] is set to [P/A/S/M Mode].
You can change the setting and playback speed for slow-motion/quick-motion shooting with [S&Q S&Q Settings].

- This function cannot be used when [S&Q Mode Settings] is set to [Fixed/Variable] (when the camera's system software (firmware) is Ver.6.00 or later).

1. **MODE (Mode) button → [S&Q Motion] → press the center of the control wheel.**
2. **MENU → (Shooting) → [Shooting Mode] → [S&Q Exposure Mode] → desired setting.**
3. **Press the REC (recording) button to start recording.**
   - Press the REC button again to stop recording.

Menu item details

S&Q P Program Auto:
Allows you to shoot with the exposure adjusted automatically (both the shutter speed and the aperture value).

S&Q A Aperture Priority:
Allows you to shoot after adjusting the aperture value manually.

S&Q S Shutter Priority:
Allows you to shoot after adjusting the shutter speed manually.

S&Q M Manual Exposure:
Allows you to shoot after adjusting the exposure (both the shutter speed and the aperture value) manually.

Related Topic

- S&Q Settings
- Exposure Ctrl Type
- S&Q Mode Settings

5-043-036-16(1) Copyright 2022 Sony Corporation

Interchangeable Lens Digital Camera
ILME-FX30

Intelligent Auto

The camera shoots with automatic scene recognition.

1. **MODE (Mode) button → [Intelligent Auto] → press the center of the control wheel.**

2. **Point the camera at the subject.**

   When the camera recognized the scene, the icon for the recognized scene appears on the screen.

3. **Adjust the focus and shoot the image.**

About Scene Recognition

The Scene Recognition function allows the camera to automatically recognize shooting conditions.
When the camera recognizes certain scenes, the following icons and guides are displayed at the top of the screen:
The scene recognition mark for movie shooting is displayed when shooting a movie using the REC (recording) button in the [Intelligent Auto] mode for still image shooting.

- (Portrait)
- (Infant)
- (Night Portrait)
- (Night Scene)
- (Backlight Portrait)
- (Backlight)
- (Landscape)
- (Macro)
- (Spotlight)
- (Low Light)
- (Night Scene using a tripod)
- (Tripod)*

* Only an icon is displayed.

Note

- The product will not recognize the scene when you shoot images with zoom functions other than optical zoom.
- The product may not properly recognize the scene under certain shooting conditions.
- For [Intelligent Auto] mode, most of the functions are set automatically, and you cannot adjust the settings on your own.

5-043-036-16(1) Copyright 2022 Sony Corporation

Program Auto

Allows you to shoot with the exposure adjusted automatically (both the shutter speed and the aperture value).

You can set shooting functions such as [ISO].

1. **MODE (Mode) button → [Program Auto] → press the center of the control wheel.**
2. **Set the shooting functions to your desired settings.**
3. **Adjust the focus and shoot the subject.**

Program Shift (only during still image shooting)

You can change the shutter speed and aperture (F-value) combination without changing the appropriate exposure set by the camera.
Turn the front/rear dial to select the aperture value and shutter speed combination.

- “P” on the screen changes to “P*” when you turn the front/rear dial.
- To cancel program shift, set the shooting mode to other than [Program Auto], or turn off the camera.

Note

- According to the brightness of the environment, the program shift may not be used.
- Set the shooting mode to another one than “P” or turn off the power to cancel the setting you made.
- When the brightness changes, the aperture (F-value) and shutter speed also change while maintaining the shift amount.

5-043-036-16(1) Copyright 2022 Sony Corporation

Aperture Priority

You can shoot by adjusting the aperture and changing the range in focus, or by defocusing the background.

1. **MODE (Mode) button → use the control wheel to select [Aperture Priority] → press the center of the control wheel.**

2. **Select the desired value by turning the front/rear dial.**
   - Smaller F-value: The subject is in focus, but objects in front of and beyond the subject are blurred.
     Larger F-value: The subject and its foreground and background are all in focus.
   - If the aperture value you have set is not suitable for appropriate exposure, the shutter speed on the shooting screen will blink. If this happens, change the aperture value.

3. **Adjust the focus and shoot the subject.**

   The shutter speed is automatically adjusted to obtain proper exposure.

Note

- The brightness of the image on the screen may differ from the actual image being shot.

Related Topic

- Aperture Preview

5-043-036-16(1) Copyright 2022 Sony Corporation

Shutter Priority

You can express the movement of a moving subject in various ways by adjusting the shutter speed, for example, at the instant of the movement with high speed shutter, or as a trailing image with low speed shutter.

1. **MODE (Mode) button → [Shutter Priority] → press the center of the control wheel.**

2. **Select the desired value by turning the front/rear dial.**
   - If proper exposure cannot be obtained after setup, the aperture value on the shooting screen blinks. If this happens, change the shutter speed.
   - When [Shutter Mode] is set to [Angle], the shutter speed for shooting movies is displayed in units of shutter angles.

3. **Adjust the focus and shoot the subject.**

   The aperture is automatically adjusted to obtain proper exposure.

Hint

- Use a tripod to prevent camera-shake when you have selected a slow shutter speed.
- When you shoot indoor sports scenes, set the ISO sensitivity to a higher value.

Note

- The SteadyShot warning indicator does not appear in [Shutter Priority] mode.
- The brightness of the image on the screen may differ from the actual image being shot.

Related Topic

- Shutter Mode

5-043-036-16(1) Copyright 2022 Sony Corporation

Interchangeable Lens Digital Camera
ILME-FX30

Manual Exposure

You can shoot with the desired exposure setting by adjusting both the shutter speed and aperture.

1. **MODE (Mode) button → [Manual Exposure] → press the center of the control wheel.**

2. **Select the desired aperture value by turning the front dial.**
   Select the desired shutter speed by turning the control wheel.
   - You can set which dial changes the aperture value and shutter speed with [Custom Key/Dial Set.] or [Custom Key/Dial Set.].
   - You can also set [ISO] to [ISO AUTO] in manual exposure mode. The ISO value automatically changes to achieve the appropriate exposure using the aperture value and shutter speed you have set.
   - When [ISO] is set to [ISO AUTO], the ISO value indicator will blink if the value you have set is not suitable for appropriate exposure. If this happens, change the shutter speed or aperture value.
   - When [ISO] is set to other than [ISO AUTO], use “M.M.” (Metered Manual)* to check the exposure value.
     Toward +: Images become brighter.
     Toward -: Images become darker.
     0: Appropriate exposure analyzed by the camera.
     * Indicates under/over for appropriate exposure.

3. **Adjust the focus and shoot the subject.**

Hint

- You can change the shutter speed and aperture (F-value) combination without changing the set exposure value by pressing the key to which you assigned [AEL hold] or [AEL toggle] using [Custom Key/Dial Set.] or [Custom Key/Dial Set.], and rotating the front dial or rear dial. (Manual shift)

Note

- The Metered Manual indicator does not appear when [ISO] is set to [ISO AUTO].
- When the amount of ambient light exceeds the metering range of the Metered Manual, the Metered Manual indicator flashes.
- The SteadyShot warning indicator does not appear in manual exposure mode.
- The brightness of the image on the screen may differ from the actual image being shot.

Related Topic

- ISO (still image/movie)

5-043-036-16(1) Copyright 2022 Sony Corporation

Shutter Mode

When shooting movies, you can choose between shutter speed or shutter angle as the method for expressing the exposure time.
This function can be used when the camera's system software (firmware) is Ver.5.00 or later.

1. **MENU → (Exposure/Color) → [Exposure] → [Shutter Mode] → desired setting.**

Menu item details

Speed:
The exposure time is expressed as a shutter speed.

Angle:
The exposure time is expressed as a shutter angle.

[Angle] is active in the following exposure modes:

- S/S&QS (Shutter Priority)
- M/S&QM (Manual Exposure)
- When [Exposure Ctrl Type] is set to [Flexible Exp. Mode] and the shutter speed is set to [Manual]

Hint

- When [Shutter Mode] is set to [Angle], the shutter angle is displayed in the footer settings, main menu, memory registration, etc.
- The shutter angle can be selected from the following ranges.
  - Normal movies: 5.6° to 64F*
  - Slow-motion/quick-motion movies: 5.6° to 360°

  * When [Rec Frame Rate] is set to [119.88p]/[100p], the range is 5.6° to 360°.
- The shutter angle is not affected by the [Exposure step] setting, and the value will remain constant.

Note

- The settings for [Speed] and [Angle] are stored separately in the camera, so the shutter speed and shutter angle will not be the same before and after switching between [Speed] and [Angle]. After switching between the shutter speed and shutter angle, reset the settings as necessary to achieve the proper exposure.

5-043-036-16(1) Copyright 2022 Sony Corporation

Auto Slow Shutter

S&Q

Sets whether or not to adjust the shutter speed automatically when recording movies if the subject is dark. This function cannot be used during slow-motion/quick-motion shooting.

1. **MENU → (Exposure/Color) → [Exposure] → [Auto Slow Shutter] → desired setting.**

Menu item details

On:
Uses Auto Slow Shutter. The shutter speed automatically slows when recording in dark locations. You can reduce noise in the movie by using a slow shutter speed when recording in dark locations.

Off:
Does not use Auto Slow Shutter. The recorded movie will be darker than when [On] is selected, but you can record movies with smoother motion and less object blur.

Note

- [Auto Slow Shutter] does not function in the following situations:
  - S (Shutter Priority)
  - M (Manual Exposure)
  - When [ISO] is set to other than [ISO AUTO]
  - When [Exposure Ctrl Type] is set to [Flexible Exp. Mode] and the method for adjusting the shutter speed is set to [Manual]
  - When [Log Shooting] under [Log Shooting Setting] is set to [Cine EI Quick] or [Cine EI]

5-043-036-16(1) Copyright 2022 Sony Corporation

Selecting the focus method (Focus Mode)

S&Q

Selects the focus method to suit the movement of the subject.

1. **MENU → AF/MF (Focus) → [AF/MF] → [Focus Mode] → desired setting.**

Menu item details

AF-S Single-shot AF:
The product locks the focus once focusing is complete. Use this when the subject is motionless.

AF-A Automatic AF:
[Single-shot AF] and [Continuous AF] are switched according to the movement of the subject. When the shutter button is pressed halfway down, the product locks the focus when it determines that the subject is motionless, or continues to focus when the subject is in motion.

AF-C Continuous AF:
The product continues to focus while the shutter button is pressed and held halfway down. Use this when the subject is in motion. In [Continuous AF] mode, there is no beep when the camera focuses.

DMF DMF:
You can make fine adjustments manually after performing auto focusing, letting you focus on a subject more quickly than when using [Manual Focus] from the beginning. This is convenient in situations such as macro shooting.

MF Manual Focus:
Adjusts the focus manually. If you cannot focus on the intended subject using auto focus, use [Manual Focus].

Focus indicator

● (lit):
The subject is in focus and the focus is locked.
● (flashing):
The subject is not in focus.
(lit):
The subject is in focus. The focus will be adjusted continuously according to the movements of the subject.
(lit):
Focusing is in progress.

Subjects on which it is difficult to focus using auto focus

- Dark and distant subjects
- Subjects with poor contrast
- Subjects seen through glass
- Fast-moving subjects
- Reflective light or shiny surfaces
- Flashing light
- Back-lit subjects

- Continuously repetitive patterns, such as the facades of buildings
- Subjects in the focusing area with different focal distances

Hint

- In [Continuous AF] mode, you can lock the focus by pressing and holding the button that has been assigned the [Focus Hold] function.
- When you set the focus to infinity in [Manual Focus] mode or [DMF] mode, make sure that the focus is on a sufficiently distant subject by checking the monitor.

Note

- [Automatic AF] is available only when you are using a lens that supports phase detection AF.
- When [Continuous AF] or [Automatic AF] is set, the angle of view may change little by little while focusing.
- Only [Continuous AF] and [Manual Focus] are available in the movie shooting mode.

Related Topic

- Direct manual focus (DMF)
- Manual Focus
- Selecting the focus area (Focus Area)
- Assigning frequently used functions to buttons and dials (Custom Key/Dial Set.)

5-043-036-16(1) Copyright 2022 Sony Corporation

Selecting the focus area (Focus Area)

Set the type of focusing frame when shooting with the auto focus. Select the mode according to the subject.

1. **MENU → AF/MF (Focus) → [Focus Area] → [Focus Area] → desired setting.**

Menu item details

Wide:
Focuses on a subject covering the whole range of the screen automatically. When you press the shutter button halfway down in the still image shooting mode, a green frame is displayed around the area that is in focus.

Zone:
Select a zone on the monitor on which to focus, and the product will automatically select a focus area.

Center Fix:
Focuses automatically on a subject in the center of the image. Use together with the focus-lock function to create the composition you want.

Spot: S/Spot: M/Spot: L:
Allows you to move the focusing frame to a desired point on the screen and focus on an extremely small subject in a narrow area.

Expand Spot:
If the product cannot focus on a single selected point, it uses focus points around the [Spot] as a secondary priority area for focusing.

Tracking:
This setting is available only when the [Focus Mode] is set to [Continuous AF]. When the shutter button is pressed and held halfway down, the product tracks the subject within the selected autofocus area. Point the cursor at [Tracking] on the [Focus Area] setting screen, and then select the desired area to start tracking using the left/right sides of the control wheel. You can also move the tracking start area to the desired point by designating the area as a [Tracking: Zone], [Tracking: Spot S]/[Tracking: Spot M]/[Tracking: Spot L] or [Tracking: Expand Spot].

Note

- [Focus Area] is locked to [Wide] in the following situations:
  - [Intelligent Auto]
- The focus area may not light up when the shutter button is pressed all the way down at once.
- When the shooting mode is set to [Movie] or [S&Q Motion] or during movie shooting, [Tracking] cannot be selected for [Focus Area].

Examples of the focusing frame display

The focusing frame differs as follows.

When focusing on a larger area

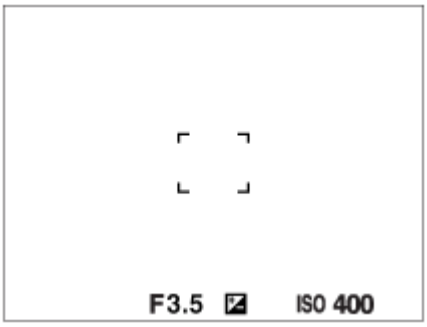

When focusing on a smaller area

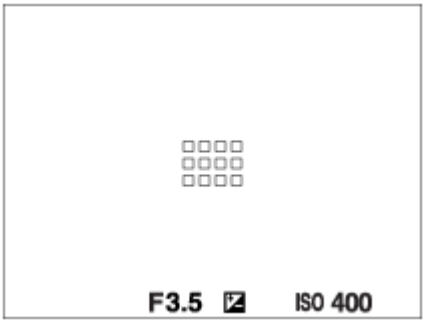

- When [Focus Area] is set to [Wide] or [Zone], the focusing frame may switch between “When focusing on a larger area” and “When focusing on a smaller area” depending on the subject or situation.
- When you attach an A-mount lens with a Mount Adaptor (LA-EA3 or LA-EA5) (sold separately), the focusing frame for “When focusing on a smaller area” may be displayed.

When focus is achieved automatically based on the whole range of the monitor

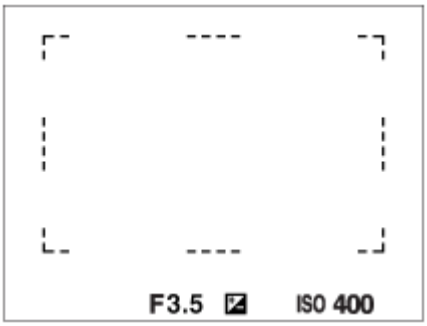

- When you use a zoom function other than the optical zoom, the [Focus Area] setting is disabled and the focusing frame is shown by the dotted line. The AF operates with priority on and around the center area.

To move the focus area

- You can move the focus area by operating the multi-selector when [Focus Area] is set to the following parameters:
  - [Zone]
  - [Spot: S]/[Spot: M]/[Spot: L]
  - [Expand Spot]
  - [Tracking: Zone]
  - [Tracking: Spot S]/[Tracking: Spot M]/[Tracking: Spot L]
  - [Tracking: Expand Spot]

If you assign [Focus Standard] to the center of the multi-selector beforehand, you can move the focusing frame back to the center of the monitor by pressing the center of the multi-selector.

Hint

- When [Focus Area] is set to [Spot] or [Expand Spot], you can move the focusing frame over a greater distance at a time with the multi-selector by setting [AF Frame Move Amt] to [Large].
- You can move the focusing frame quickly by touching and dragging it on the monitor. Set [Touch Operation] to [On], and set [Touch Func. in Shooting] to [Touch Focus] beforehand.

To track the subject temporarily when shooting still images (Tracking On)

You can temporarily change the setting for [Focus Area] to [Tracking] while you press and hold down the custom key to which you have assigned [Tracking On] in advance. The [Focus Area] setting before you activated [Tracking On] will switch to the equivalent [Tracking] setting.
For example:

[Focus Area] before you activate [Tracking On]	[Focus Area] while [Tracking On] is active
[Wide]	[Tracking: Wide]
[Spot: S]	[Tracking: Spot S]
[Expand Spot]	[Tracking: Expand Spot]

Phase detection AF

When there are phase detection AF points within the auto focus area, the product uses the combined autofocus of the phase detection AF and contrast AF.

Note

- Phase detection AF is available only when a compatible lens is attached. If you use a lens that does not support phase detection AF, you cannot use the following functions.

  – [Automatic AF]
  – [AF Tracking Sensitivity]
  – [AF Subj. Shift Sensitivity]
  – [AF Transition Speed]

  Also, even if you use a previously purchased applicable lens, the phase detection AF might not function unless you update the lens.

Related Topic

- Selecting the focus method (Focus Mode)
- Touch Operation
- Focusing using touch operations (Touch Focus)
- Adjusting the focus area settings to the camera's orientation (horizontal/vertical) (Switch V/H AF Area)
- Registering the current focus area (AF Area Registration)

5-043-036-16(1) Copyright 2022 Sony Corporation

Tracking subject (Tracking function)

This camera has the function of tracking which tracks the subject, and keeps marking it with the focusing frame.
You can set the start position to track by selecting from focusing areas, or by specifying by touch operation. The required function varies depending on the setting method.

- You can refer to the related functions under “Related Topic” at the bottom of this page.

Setting the start position to track by focusing area ([Tracking] under [Focus Area])

The selected focusing frame is set as the start position to track, and the tracking starts by pressing the shutter button halfway down.

- This function is available in still image shooting mode.
- This function is available when [Focus Mode] is set to [Continuous AF].

Setting the start position to track by touch operation ([Touch Tracking] under [Touch Func. in Shooting])

You can set the subject to track by touching it on the monitor.

- This function is available in still image shooting mode and movie shooting mode.
- This function is available when [Focus Mode] is set to [Single-shot AF], [Automatic AF], [Continuous AF], or [DMF].

Changing the setting for [Focus Area] to [Tracking] temporarily ([Tracking On] by Custom Key)

Even [Focus Area] is set to other than [Tracking], you can temporarily change the setting for [Focus Area] to [Tracking] while pressing and holding the key to which you have assigned [Tracking On] function.

- Assign the [Tracking On] function to a desired key using [Custom Key/Dial Set.] in advance.
- This function is available in still image shooting mode.
- This function is available when [Focus Mode] is set to [Continuous AF].

Related Topic

- Selecting the focus method (Focus Mode)
- Selecting the focus area (Focus Area)
- Starting tracking with touch operations (Touch Tracking)
- Assigning frequently used functions to buttons and dials (Custom Key/Dial Set.)

5-043-036-16(1) Copyright 2022 Sony Corporation

Manual Focus

When it is difficult to focus properly in the autofocus mode, you can adjust the focus manually.

1. **MENU → AF/MF (Focus) → [AF/MF] → [Focus Mode] → [Manual Focus].**

2. **Rotate the focusing ring to achieve sharp focus.**
   - When you shoot a still image, you can display the focus distance on the screen by rotating the focusing ring. The focus distance is not displayed when the Mount Adaptor (sold separately) is attached.

Note

- The displayed focus distance is just a reference.

Related Topic

- Direct manual focus (DMF)
- Auto Magnifier in MF
- Focus Magnifier
- Peaking Display

5-043-036-16(1) Copyright 2022 Sony Corporation

Direct manual focus (DMF)

S&Q

You can make fine adjustments manually after performing auto focusing, letting you focus on a subject more quickly than when using the manual focus from the beginning. This is convenient in situations such as macro shooting.

1. **MENU → AF/MF (Focus) → [AF/MF] → [Focus Mode] → [DMF].**
2. **Press the shutter button halfway down to focus automatically.**
3. **Keep the shutter button pressed halfway down, and then rotate the focusing ring to achieve a sharper focus.**
   - When you rotate the focusing ring, the focus distance is displayed on the screen.
     The focus distance is not displayed when the Mount Adaptor (sold separately) is attached.
4. **Press the shutter button fully down to shoot an image.**

Related Topic

- Manual Focus
- Peaking Display

5-043-036-16(1) Copyright 2022 Sony Corporation

Focusing on human eyes

The camera can automatically detect faces and eyes and focus on the eyes (Eye AF). The following explanation is for cases where the detection target is human. The faces of up to 8 subjects can be detected.
There are two methods for performing [Eye AF], with some differences between their specifications. Select the appropriate method according to your purpose.

Item	[Face/Eye Prior. in AF] function	[Eye AF] via a custom key
Characteristics	The camera will detect faces/eyes with greater priority.	The camera will detect faces/eyes exclusively.
Advance preparation	• Select [Face/Eye Prior. in AF] → [On]. • Select [Face/Eye Subject] → [Human].	Assign [Eye AF] to the desired key using [Custom Key/Dial Set.] or [Custom Key/Dial Set.].
How to perform [Eye AF]	Press the shutter button halfway down.*1	Press the key to which you have assigned the [Eye AF] function.*2
Function details	• When the camera detects a face or eye inside or around the designated focus area, it focuses on the face or eye with greater priority. • If the camera does not detect any faces or eyes inside or around the designated focus area, it will focus on another detectable subject.	• The camera focuses exclusively on faces or eyes anywhere on the screen, regardless of the setting for [Focus Area]. • The camera will not automatically focus on another subject if no face or eye is detected anywhere on the screen.
Focus mode	Follows the setting designated with [Focus Mode]	Follows the setting designated with [Focus Mode]
Focus area	Follows the setting designated with [Focus Area]	The focus area temporarily becomes the entire screen, regardless of the setting for [Focus Area].

*1 This is the operation for performing [Eye AF] when shooting still images. When shooting movies, [Eye AF] is activated without pressing the shutter button as long as faces or eyes are detected.
*2 Regardless of whether [Face/Eye Prior. in AF] is set to [On] or [Off], you can use [Eye AF] via a custom key while you are pressing the custom key to which you have assigned [Eye AF].

[Eye AF] by custom key

The Eye AF function can be used by assigning [Eye AF] to a custom key. The camera can focus on eyes as long as you are pressing the key. This is useful when you want to temporarily apply the Eye AF function to the entire screen regardless of the setting for [Focus Area].
The camera does not focus automatically if no faces or eyes are detected.

1. MENU → (Setup) → [Operation Customize] → [Custom Key/Dial Set.] or [Custom Key/Dial Set.] → desired key, then assign the [Eye AF] function to the key.

2. MENU → AF/MF (Focus) → [Face/Eye AF] → [Face/Eye Subject] → [Human].
3. Point the camera at the face of a human, and press the key to which you have assigned the [Eye AF] function.
   To shoot a still image, press the shutter button while pressing the key.

To focus on the eyes of an animal or a bird

Set [Face/Eye Subject] to [Animal] or [Bird] before shooting.

Hint

- Setting [Face/Eye Frame Disp.] to [On] makes it easier to check the detection status of faces or eyes.

Note

- The [Eye AF] function may not function very well in the following situations:
  - When the person is wearing sunglasses.
  - When the front hair covers the person's eyes.
  - In low-light or back-lit conditions.
  - When the eyes are closed.
  - When the subject is in the shade.
  - When the subject is out of focus.
  - When the subject is moving too much

  There are also other situations in which it may not be possible to focus on the eyes.
- When the camera cannot focus on human eyes, it will detect and focus on the face instead. The camera cannot focus on eyes when no human faces are detected.
- The camera may not detect faces at all or may accidentally detect other objects as faces in some conditions.

Related Topic

- Face/Eye Prior. in AF (still image/movie)
- Face/Eye Subject (still image/movie)
- Subject Sel. Setting (still image/movie)
- Right/Left Eye Select (still image/movie)
- Face/Eye Frame Disp. (still image/movie)
- Selecting the focus method (Focus Mode)
- Selecting the focus area (Focus Area)

5-043-036-16(1) Copyright 2022 Sony Corporation

Face/Eye Prior. in AF (still image/movie)

S&Q

Sets whether or not the camera detects faces or eyes inside the focus area while performing autofocus, and then focuses on the eyes automatically (Eye AF).

1. **MENU → AF/MF (Focus) → [Face/Eye AF] → [Face/Eye Prior. in AF] → desired setting.**

Menu item details

On:
Focuses on the faces or eyes with priority if there are faces or eyes inside or around the designated focus area.

Off:
Does not prioritize faces or eyes when performing auto-focusing.

Hint

- By combining the [Face/Eye Prior. in AF] function with [Focus Area] → [Tracking], you can maintain focus on a moving eye or face.
- When [Face/Eye Priority Select] is assigned to the desired key using [Custom Key/Dial Set.] or [Custom Key/Dial Set.], you can switch the [Face/Eye Prior. in AF] function on or off by pressing the key.

Note

- If the camera does not detect any faces or eyes inside or around the designated focus area, it will focus on another detectable subject.
- When the shooting mode is set to [Intelligent Auto], [Face/Eye Prior. in AF] is locked to [On].

Related Topic

- Focusing on human eyes
- Face/Eye Subject (still image/movie)
- Subject Sel. Setting (still image/movie)
- Right/Left Eye Select (still image/movie)
- Assigning frequently used functions to buttons and dials (Custom Key/Dial Set.)

5-043-036-16(1) Copyright 2022 Sony Corporation

Face/Eye Subject (still image/movie)

Selects the target to be detected with the Face/Eye AF function.

1. **MENU → AF/MF (Focus) → [Face/Eye AF] → [Face/Eye Subject] → desired setting.**

Menu item details

Human:
Detects human faces/eyes.

Animal:
Detects animal eyes.

Bird:
Detects the eyes of birds.

Hint

- To detect animal or bird eyes, compose the shot so that the entire head is within the angle of view. Once you focus on the animal's or bird's head, the eyes will be detected more easily.

Note

- When [Face/Eye Subject] is set to [Animal] or [Bird], the following functions cannot be used.
  - Face Priority in Multi Metering
  - Regist. Faces Priority
- Even when [Face/Eye Subject] is set to [Animal], the eyes of some types of animals cannot be detected.
- Even when [Face/Eye Subject] is set to [Bird], the eyes of some types of birds cannot be detected.

Related Topic

- Focusing on human eyes
- Face/Eye Prior. in AF (still image/movie)

5-043-036-16(1) Copyright 2022 Sony Corporation

Subject Sel. Setting (still image/movie)

S&Q

Sets the types of detection targets that are available when using the custom key to which [Swt Face/Eye Sbjc Dtc] is assigned.

1. **MENU → AF/MF (Focus) → [Face/Eye AF] → [Subject Sel. Setting] → Add check marks to the detection targets that you want to select, and then select [OK].**

   The types of targets marked with ✓ (check mark) will be available as settings.

Hint

- Assign [Swt Face/Eye Sbjc Dtc] to the desired key using [Custom Key/Dial Set.] or [Custom Key/Dial Set.].
- You can select the types of targets to which you did not add a check mark in [Subject Sel. Setting] by selecting MENU → AF/MF (Focus) → [Face/Eye AF] → [Face/Eye Subject].

Related Topic

- Face/Eye Subject (still image/movie)
- Assigning frequently used functions to buttons and dials (Custom Key/Dial Set.)

5-043-036-16(1) Copyright 2022 Sony Corporation

Right/Left Eye Select (still image/movie)

S&Q

Sets whether to focus on the left eye or right eye when [Face/Eye Subject] is set to [Human] or [Animal].

1. **MENU → AF/MF (Focus) → [Face/Eye AF] → [Right/Left Eye Select] → desired setting.**

Menu item details

Auto:
The camera automatically detects either the left eye or right eye.

Right Eye:
The right eye of the subject (the eye on the left side from the photographer's perspective) is detected.

Left Eye:
The left eye of the subject (the eye on the right side from the photographer's perspective) is detected.

[Switch Right/Left Eye] by custom key

You can also switch the eye to be detected by pressing the custom key.
When [Right/Left Eye Select] is set to [Right Eye] or [Left Eye], you can switch the eye to be detected by pressing the custom key to which you have assigned the [Switch Right/Left Eye] function.
When [Right/Left Eye Select] is set to [Auto], you can temporarily switch the eye to be detected by pressing the custom key to which you have assigned the [Switch Right/Left Eye] function.
The temporary left/right selection is cancelled when you perform the following operations, etc. The camera returns to automatic eye detection.

- Pressing the center of the control wheel
- Pressing the center of the multi-selector
- Stopping pressing the shutter button halfway down (only during still image shooting)
- Stopping pressing the custom key to which [AF On] or [Eye AF] is assigned (only during still image shooting)
- Pressing the MENU button

Hint

- When [Face/Eye Frame Disp.] is set to [On], the eye detection frame appears around the eye you selected using [Right/Left Eye Select] or [Switch Right/Left Eye] with the custom key.

Related Topic

- Focusing on human eyes
- Face/Eye Prior. in AF (still image/movie)
- Face/Eye Subject (still image/movie)
- Face/Eye Frame Disp. (still image/movie)
- Face Memory

5-043-036-16(1) Copyright 2022 Sony Corporation

Face/Eye Frame Disp. (still image/movie)

Sets whether or not to display the face/eye detection frame when a face or eyes are detected.

1. **MENU → AF/MF (Focus) → [Face/Eye AF] → [Face/Eye Frame Disp.] → desired setting.**

Menu item details

On:
Displays a detection frame when a face or eyes are detected.

Off:
Does not display a detection frame when a face or eyes are detected.

Face detection frame

When the camera detects a face, the gray face-detection frame appears. The frame color will be reddish purple if the detected face has been registered using the [Face Memory] function.
The face detection frame turns white when the face is detected inside or around the focus area, and the camera determines that autofocus is enabled.

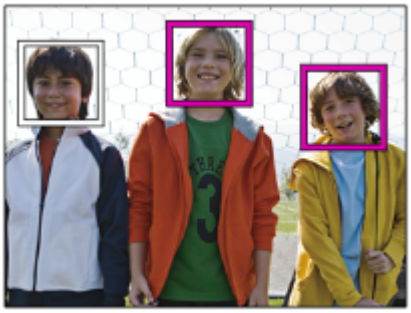

Eye detection frame

A white eye detection frame appears when an eye is detected and the camera determines that autofocusing is possible.

The eye detection frame is displayed as follows when [Face/Eye Subject] is set to [Animal] or [Bird].

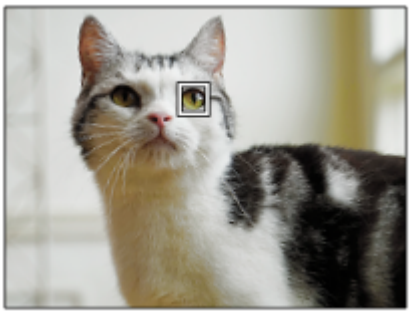

Hint

- If you want the face or eye detection frame to disappear within a certain period of time after the camera has focused on the face or eye, set [AF Area Auto Clear] to [On].

Note

- If the subject or the camera is moving too much, the detection frame may not be displayed correctly over the subject.
- The eye detection frame is not displayed when the Eye AF function is unavailable.
- Even if [Face/Eye Frame Disp.] is set to [Off], a green focusing frame will appear over faces or eyes that are in focus when you press the shutter button halfway down, etc.

Related Topic

- Focusing on human eyes
- Face/Eye Prior. in AF (still image/movie)
- Face/Eye Subject (still image/movie)
- Right/Left Eye Select (still image/movie)
- Face Memory

5-043-036-16(1) Copyright 2022 Sony Corporation

Face Memory

Sets personal face data. If you register faces in advance, the product can focus on the registered face as a priority.
Up to eight faces can be registered.

1. **MENU → AF/MF (Focus) → [Face/Eye AF] → [Face Memory] → desired setting item.**

Menu item details

New Registration:
Shoots and registers faces.

Order Exchanging:
When multiple faces are registered, the order of priority for the registered face data can be changed.

Delete:
Deletes registered faces one by one.

Delete All:
Deletes all registered faces at once.

Note

- When performing [New Registration], shoot the face from the front in a brightly lit place. The face may not be registered correctly if it is obscured by a hat, a mask, sunglasses, etc.
- Even if you execute [Delete], the data for registered face will remain in the product. To delete the data for registered faces from the product, select [Delete All].
- Faces registered through the [Face Memory] function are considered biometric information. Users are responsible for collecting and using such data and for complying with the laws and regulations of the relevant country or region. For more information, visit the following website.
https://www.sony.net/dics/privacy

Related Topic

- Regist. Faces Priority (still image/movie)

5-043-036-16(1) Copyright 2022 Sony Corporation

Regist. Faces Priority (still image/movie)

S&Q

Sets whether to focus with higher priority on faces registered using [Face Memory].

1. **MENU → AF/MF (Focus) → [Face/Eye AF] → [Regist. Faces Priority] → desired setting.**

Menu item details

On:
Focuses with higher priority on faces registered using [Face Memory].

Off:
Focuses without giving higher priority to registered faces.

Hint

- To use the [Regist. Faces Priority] function, set as follows.
  - [Face/Eye Prior. in AF] under [Face/Eye AF]: [On]
  - [Face/Eye Subject] under [Face/Eye AF]: [Human]

Related Topic

- Face/Eye Prior. in AF (still image/movie)
- Face Memory

5-043-036-16(1) Copyright 2022 Sony Corporation

Focus Standard

S&Q

If you press the key to which [Focus Standard] is assigned, you can recall useful functions such as automatically focusing on a subject in the center of the screen in accordance with the focus area settings.

1. **MENU → (Setup) → [Operation Customize] → [Custom Key/Dial Set.] or [Custom Key/Dial Set.] → desired key, then assign the [Focus Standard] function to the key.**

2. **Press the key to which [Focus Standard] is assigned.**
   - What you can do by pressing the key varies depending on the setting for [Focus Area].

Examples of [Focus Standard] key functions

- When [Focus Area] is set to any of the following parameters, pressing the key moves the focusing frame back to the center:
  - [Zone]
  - [Spot: S]/[Spot: M]/[Spot: L]
  - [Expand Spot]
  - [Tracking: Zone]
  - [Tracking: Spot S]/[Tracking: Spot M]/[Tracking: Spot L]
  - [Tracking: Expand Spot]

- When [Focus Area] is set to [Wide], [Center Fix], [Tracking: Wide], or [Tracking: Center Fix], pressing the key in the autofocus mode makes the camera focus on the center of the screen. If you press the key while recording a movie with manual focus, you can temporarily switch to autofocus and focus on the center of the screen.

Note

- You cannot set the [Focus Standard] function to [Left Button], [Right Button] or [Down Button] of the control wheel.

Related Topic

- Assigning frequently used functions to buttons and dials (Custom Key/Dial Set.)
- Selecting the focus area (Focus Area)

5-043-036-16(1) Copyright 2022 Sony Corporation

Adjusting the focus area settings to the camera's orientation (horizontal/vertical) (Switch V/H AF Area)

You can set whether to switch the [Focus Area] and the position of the focusing frame according to the orientation of the camera (horizontal/vertical). This function is useful when shooting scenes for which you have to change the camera position frequently, such as portraits or sports scenes.

1. **MENU → AF/MF (Focus) → [Focus Area] → [Switch V/H AF Area] → desired setting.**

Menu item details

Off:
Does not switch the [Focus Area] and the position of the focusing frame according to the orientation of the camera (horizontal/vertical).

AF Point Only:
Switches the position of the focusing frame according to the orientation of the camera (horizontal/vertical). The [Focus Area] is fixed.

AF Point + AF Area:
Switches both the [Focus Area] and the position of the focusing frame according to the orientation of the camera (horizontal/vertical).

An example when [AF Point + AF Area] is selected

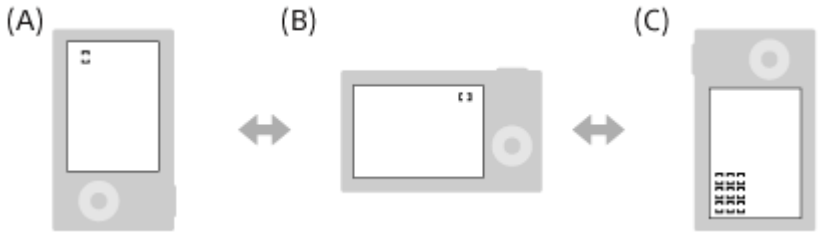

(A) Vertical: [Spot] (Upper left corner)
(B) Horizontal: [Spot] (Upper right corner)
(C) Vertical: [Zone] (Lower left corner)

- Three camera orientations are detected: horizontal, vertical with the side of the shutter button facing up, and vertical with the side of the shutter button facing down.

Note

- If the setting for [Switch V/H AF Area] is changed, the focus settings for each camera orientation will not be retained.
- The [Focus Area] and the position of the focusing frame will not change even when [Switch V/H AF Area] is set to [AF Point + AF Area] or [AF Point Only] in the following situations:
  - When the shooting mode is set to [Intelligent Auto]
  - During movie shooting
  - While using the digital zoom function
  - While the auto-focusing is activated*
  - During the countdown for the self-timer
  - When [Focus Magnifier] is activated

* [Switch V/H AF Area] can be performed only when [Focus Mode] is set to AF-C.

- When you shoot images right after the power is turned on and the camera is vertical, the first shot is taken with the horizontal focus setting or with the last focus setting.
- The orientation of the camera cannot be detected when the lens is facing up or down.

Related Topic

- Selecting the focus area (Focus Area)

5-043-036-16(1) Copyright 2022 Sony Corporation

Registering the current focus area (AF Area Registration)

You can move the focusing frame to a preassigned position temporarily using a custom key. This function is useful when shooting scenes in which the subject's movements are predictable; for example, sports scenes. With this function, you can switch the focus area quickly according to the situation.

How to register focus area

1. MENU → AF/MF (Focus) → [Focus Area] → [AF Area Registration] → [On].
2. Set the focus area to the desired position and then hold down the Fn (Function) button.

How to call up the registered focus area

1. MENU → (Setup) → [Operation Customize] → [Custom Key/Dial Set.] → desired key, then select [Regist. AF Area hold].
2. Set the camera to the shooting mode, hold down the key to which [Regist. AF Area hold] has been assigned and then press the shutter button to shoot images.

Hint

- When a focusing frame is registered using [AF Area Registration], the registered focusing frame flashes on the monitor.
- If you assign [Regist AF Area tggle] to a custom key, you can use the registered focusing frame without holding down the key.
- If [Reg. AF Area+AF On] is assigned to a custom key, auto focusing using the registered focusing frame is performed when the key is pressed.

Note

- A focus area cannot be registered in the following situations:
  - While [Touch Focus] is being performed
  - While using the digital zoom function
  - While [Touch Tracking] is being performed
  - While focusing
  - While performing focus lock
- You cannot assign [Regist. AF Area hold] to [Left Button], [Right Button], or [Down Button].
- You cannot call up the registered focus area in the following situations:
  - The shooting mode is set to [Intelligent Auto], [Movie], or [S&Q Motion]
- When [AF Area Registration] is set to [On], the [Lock Operation Parts] setting is locked to [Off].

Related Topic

- Selecting the focus area (Focus Area)
- Deleting a registered AF Area (Del. Regist. AF Area)
- Assigning frequently used functions to buttons and dials (Custom Key/Dial Set.)

5-043-036-16(1) Copyright 2022 Sony Corporation

Deleting a registered AF Area (Del. Regist. AF Area)

Deletes the focusing frame position that was registered using [AF Area Registration].

1. **MENU → AF/MF (Focus) → [Focus Area] → [Del. Regist. AF Area].**

Related Topic

- Registering the current focus area (AF Area Registration)

5-043-036-16(1) Copyright 2022 Sony Corporation

Focus Area Limit (still image/movie)

By limiting the types of available focus area settings in advance, you can more quickly select settings for [Focus Area].

1. **MENU → AF/MF (Focus) → [Focus Area] → [Focus Area Limit] → Add check marks to the focus areas that you want to use, and then select [OK].**

   The types of focus areas marked with ✓ (check mark) will be available as settings.

Hint

- When you assign [Switch Focus Area] to a desired key using [Custom Key/Dial Set.] or [Custom Key/Dial Set.], the focus area changes every time you press the assigned key. By limiting the types of selectable focus areas with [Focus Area Limit] in advance, you can more quickly select the focus area setting you want.

Note

- Types of focus areas that do not have a check mark cannot be selected using MENU or the Fn (function) menu. To select one, add a check mark using [Focus Area Limit].
- If you remove the check mark for a focus area registered with [Switch V/H AF Area] or [AF Area Registration], the registered settings will change.

Related Topic

- Selecting the focus area (Focus Area)
- Assigning frequently used functions to buttons and dials (Custom Key/Dial Set.)

5-043-036-16(1) Copyright 2022 Sony Corporation

Circ. of Focus Point (still image/movie)

Sets whether to allow the focusing frame to jump from one end to the other when you move the focusing frame. This function is useful when you want to move the focusing frame from one end to the other quickly.
The function can be used when the following settings are selected for [Focus Area].

- [Zone]
- [Spot: S]/[Spot: M]/[Spot: L]
- [Expand Spot]
- [Tracking: Zone]
- [Tracking: Spot S]/[Tracking: Spot M]/[Tracking: Spot L]
- [Tracking: Expand Spot]

1. **MENU → AF/MF (Focus) → [Focus Area] → [Circ. of Focus Point] → desired setting.**

   When [Circulate] is selected:

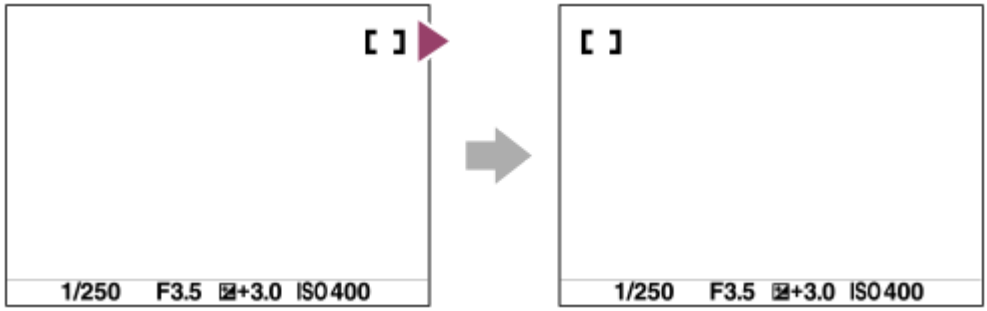

Menu item details

Does Not Circulate:
The cursor does not move when you try to move the focusing frame past the end.

Circulate:
The cursor jumps to the opposite end when you try to move the focusing frame past the end.

Note

- Even if you set [Circ. of Focus Point] to [Circulate], the focusing frame will not circulate diagonally.

Related Topic

- Selecting the focus area (Focus Area)

5-043-036-16(1) Copyright 2022 Sony Corporation

AF Frame Move Amt (still image/movie)

S&Q

Sets the distance by which the focusing frame is moved when [Focus Area] is set to [Spot], etc. You can quickly move the focusing frame by increasing the distance, such as in situations where the subject is moving a lot.

1. **MENU → AF/MF (Focus) → [Focus Area] → [AF Frame Move Amt] → desired setting.**

Menu item details

Standard:
The focusing frame moves by the standard distance.

Large:
The focusing frame moves over a greater distance at a time than with [Standard].

Hint

- When [Swt. AF Frame Move hold] is assigned to the desired key using [Custom Key/Dial Set.] or [Custom Key/Dial Set.], the [AF Frame Move Amt] setting temporarily switches while the key is pressed.
- If any of the following functions is assigned to the dials or control wheel using [Custom Key/Dial Set.] or [Custom Key/Dial Set.], you can move the focusing frame by the distance determined for each function, regardless of the setting for [AF Frame Move Amt].
  - [Move AF Frame ↔ : L]
  - [Move AF Frame ↕ : L]
  - [Move AF Frame ↔ : Std]
  - [Move AF Frame ↕ : Std]
- If any of the following functions is assigned to the dials or control wheel using [My Dial Settings], you can move the focusing frame by the distance determined for each function, regardless of the setting for [AF Frame Move Amt].
  - [Move AF Frame ↔ : L]
  - [Move AF Frame ↕ : L]
  - [Move AF Frame ↔ : Std]
  - [Move AF Frame ↕ : Std]

Related Topic

- Selecting the focus area (Focus Area)
- Assigning frequently used functions to buttons and dials (Custom Key/Dial Set.)

5-043-036-16(1) Copyright 2022 Sony Corporation

Focus Area Color (still image/movie)

You can specify the color of the frame indicating the focusing area. If the frame is difficult to see because of the subject, make it more visible by changing its color.

1. **MENU → AF/MF (Focus) → [Focus Area] → [Focus Area Color] → desired color.**

Menu item details

White:
Displays the frame indicating the focusing area in white.

Red:
Displays the frame indicating the focusing area in red.

Related Topic

- Selecting the focus area (Focus Area)

5-043-036-16(1) Copyright 2022 Sony Corporation

AF Area Auto Clear

Sets whether the focus area is displayed all the time or disappears automatically shortly after focus is achieved.

1. **MENU → AF/MF (Focus) → [Focus Area] → [AF Area Auto Clear] → desired setting.**

Menu item details

On:
The focus area disappears automatically shortly after focus is achieved.

Off:
The focus area is displayed all the time.

Related Topic

- Selecting the focus area (Focus Area)

5-043-036-16(1) Copyright 2022 Sony Corporation

Area Disp. dur Tracking

Sets whether or not to display the frame for the focusing area when [Focus Mode] is set to [Continuous AF] and [Focus Area] is set to [Tracking].

1. **MENU → AF/MF (Focus) → [Focus Area] → [Area Disp. dur Tracking] → desired setting.**

Menu item details

On:
Displays the frame for the focusing area during tracking. Since the tracking start area is displayed while tracking the subject, it is helpful when starting the next session of shooting.

Off:
Does not display the frame for the focusing area during tracking.

Related Topic

- Selecting the focus area (Focus Area)

5-043-036-16(1) Copyright 2022 Sony Corporation

AF-C Area Display

You can set whether or not to display the area that is in focus when [Focus Mode] is set to [Continuous AF] and [Focus Area] is set to [Wide] or [Zone].

1. **MENU → AF/MF (Focus) → [Focus Area] → [AF-C Area Display] → desired setting.**

Menu item details

On:
Displays the focus area that is in focus.

Off:
Does not display the focus area that is in focus.

Note

- When [Focus Area] is set to one of the following, the focusing frames in the area that is in focus turn green:
  - [Center Fix]
  - [Spot]
  - [Expand Spot]

Related Topic

- Selecting the focus area (Focus Area)

5-043-036-16(1) Copyright 2022 Sony Corporation

Phase Detect. Area

Sets whether or not to display the Phase Detection AF area.

1. **MENU → AF/MF (Focus) → [Focus Area] → [Phase Detect. Area] → desired setting.**

Menu item details

On:
Displays the Phase Detection AF area.

Off:
Does not display the Phase Detection AF area.

Note

- Phase Detection AF is available only with compatible lenses. If an incompatible lens is attached, you will be unable to use Phase Detection AF. Phase Detection AF may not operate even with some compatible lens, such as lenses purchased in the past that have not been updated.
- When recording movies, the Phase Detection AF area will not be displayed.

5-043-036-16(1) Copyright 2022 Sony Corporation

AF Tracking Sensitivity

You can select the AF track sensitivity when the subject goes out of focus in still image mode.

1. **MENU → AF/MF (Focus) → [AF/MF] → [AF Tracking Sensitivity] → desired setting.**

Menu item details

5(Responsive)/4/3(Standard)/2/1(Locked on):
Select [5(Responsive)] to focus responsively on subjects at different distances.
Select [1(Locked on)] to keep the focus on a specific subject when other things are crossing in front of the subject.

5-043-036-16(1) Copyright 2022 Sony Corporation

AF Transition Speed

S&Q

Sets the focusing speed when the target of the auto focus is switched during movie shooting.

1. **MENU → AF/MF (Focus) → [AF/MF] → [AF Transition Speed] → desired setting.**

Menu item details

7 (Fast)/6/5/4/3/2/1 (Slow):
Select a faster value to focus on the subject more quickly.

Select a slower value to focus on the subject more smoothly.

Hint

- You can use the touch focus function to intentionally transition the AF.

5-043-036-16(1) Copyright 2022 Sony Corporation

AF Subj. Shift Sensitivity

S&Q

Sets the sensitivity with which the focus switches to another subject when the original subject leaves the focus area or an unfocused subject in the foreground approaches the center of the focus area during movie shooting.

1. **MENU → AF/MF (Focus) → [AF/MF] → [AF Subj. Shift Sensitivity] → desired setting.**

Menu item details

5(Responsive)/4/3/2/1(Locked on):
Select a higher value when you want to shoot a quick-moving subject, or when you want to shoot multiple subjects while switching the focus continually.
Select a lower value when you want the focus to remain steady, or when you want to keep the focus on a particular target without being affected by other subjects.

5-043-036-16(1) Copyright 2022 Sony Corporation

AF Assist

S&Q

While shooting a movie with auto focus, you can change the subject in focus by operating the focus ring of the lens.

1. **MENU → AF/MF (Focus) → [AF/MF] → [AF Assist] → [On].**

2. **While shooting a movie with auto focus, turn the focus ring of the lens to focus on the intended subject.**

   When you stop operating the focus ring, the subject that is in focus with the focus ring becomes the autofocus target.

Menu item details

On:
Uses the AF assist function.
Off:
Does not use the AF assist function.

Hint

- It will be easier to see which region is in focus if you use the [Peaking Display] or [Focus Map] function along with [AF Assist], making it easier for you to focus on the intended subject.

Note

- Only subjects within the focus area are targeted by auto focus.
- The following lenses are not compatible with [AF Assist].
  - SELP1650 (sold separately)
  - SEL18200LE (sold separately)

Related Topic

- Peaking Display
- Focus Map

5-043-036-16(1) Copyright 2022 Sony Corporation

AF/MF Selector

S&Q

You can easily switch the focusing mode from auto to manual and vice versa while shooting without changing your holding position.

1. **MENU → (Setup) → [Operation Customize] → [Custom Key/Dial Set.] or [Custom Key/Dial Set.] → desired button → [AF/MF Selector Hold] or [AF/MF Selector Toggle].**

Menu item details

AF/MF Selector Hold:
Switches the focusing mode while the button is held down.

AF/MF Selector Toggle:
Switches the focusing mode until the button is pressed again.

Note

- You cannot set the [AF/MF Selector Hold] function to [Left Button], [Right Button] or [Down Button] of the control wheel.
- If the lens is equipped with an AF/MF selector switch, the state of the switch on the lens will take priority.

Related Topic

- Assigning frequently used functions to buttons and dials (Custom Key/Dial Set.)

5-043-036-16(1) Copyright 2022 Sony Corporation

Interchangeable Lens Digital Camera
ILME-FX30

AF w/ Shutter

Selects whether to focus automatically when you press the shutter button halfway down. Select [Off] to adjust the focus and the exposure separately.

1. **MENU → AF/MF (Focus) → [AF/MF] → [AF w/ Shutter] → desired setting.**

Menu item details

On:
The auto focus operates when you press the shutter button halfway down.

Off:
The auto focus does not operate even if you press the shutter button halfway down.

Related Topic

- AF On

5-043-036-16(1) Copyright 2022 Sony Corporation

AF On

S&Q

You can focus without pressing the shutter button halfway down. The settings for [Focus Mode] will be applied.

1. **MENU → (Setup) → [Operation Customize] → [Custom Key/Dial Set.] or [Custom Key/Dial Set.] → desired key, then assign the [AF On] function to the key.**

2. **Press the key to which you have assigned the [AF On] function.**
   - When shooting a movie, you can perform auto-focusing by holding down the custom key to which [AF On] is assigned even in the manual focusing mode.

Hint

- Set [AF w/ Shutter] to [Off] when you do not want to perform auto focusing using the shutter button.
- Set [AF w/ Shutter] and [Pre-AF] to [Off] to focus at a specific shooting distance predicting the position of the subject.

Related Topic

- AF w/ Shutter
- Pre-AF

5-043-036-16(1) Copyright 2022 Sony Corporation

Focus Hold

S&Q

Locks the focus while the key to which the Focus Hold function has been assigned is pressed.

1. **MENU → (Setup) → [Operation Customize] → [Custom Key/Dial Set.] or [Custom Key/Dial Set.] → assign the [Focus Hold] function to the desired key.**
2. **Focus and press the key to which the [Focus Hold] function has been assigned.**

Related Topic

- Assigning frequently used functions to buttons and dials (Custom Key/Dial Set.)

5-043-036-16(1) Copyright 2022 Sony Corporation

Pre-AF

The product automatically adjusts focus before you press the shutter button halfway down.

1. **MENU → AF/MF (Focus) → [AF/MF] → [Pre-AF] → desired setting.**

Menu item details

On:
Adjusts focus before you press the shutter button halfway down.

Off:
Does not adjust focus before you press the shutter button halfway down.

Note

- [Pre-AF] is available only when an E-mount lens is mounted.
- During focusing operations, the screen may shake.

5-043-036-16(1) Copyright 2022 Sony Corporation

Priority Set in AF-S

Sets whether to release the shutter even if the subject is not in focus when [Focus Mode] is set to [Single-shot AF], [DMF] or [Automatic AF] and the subject is remaining still.

1. **MENU → AF/MF (Focus) → [AF/MF] → [Priority Set in AF-S] → desired setting.**

Menu item details

AF:
Prioritizes focusing. The shutter will not be released until the subject is in focus.

Release:
Prioritizes the shutter's release. The shutter will be released even if the subject is out of focus.

Balanced Emphasis:
Shoots with a balanced emphasis on both focusing and shutter release.

Related Topic

- Selecting the focus method (Focus Mode)
- Priority Set in AF-C

5-043-036-16(1) Copyright 2022 Sony Corporation

Priority Set in AF-C

Sets whether to release the shutter even if the subject is not in focus when the continuous AF is activated and the subject is in motion.

1. **MENU → AF/MF (Focus) → [AF/MF] → [Priority Set in AF-C] → desired setting.**

Menu item details

AF:
Prioritizes focusing.

Release:
Prioritizes the shutter's release. The shutter will be released even if the subject is out of focus.

Balanced Emphasis:
Shoots with a balanced emphasis on both focusing and shutter release.

Related Topic

- Selecting the focus method (Focus Mode)
- Priority Set in AF-S

5-043-036-16(1) Copyright 2022 Sony Corporation

AF in Focus Mag.

S&Q

You can focus on the subject more accurately using auto-focus by magnifying the area where you want to focus. While the magnified image is displayed, you can focus on a smaller area than [Spot] under [Focus Area].

1. **MENU → AF/MF (Focus) → [Focus Assistant] → [AF in Focus Mag.] → [On].**

2. **MENU → AF/MF (Focus) → [Focus Assistant] → [Focus Magnifier].**

3. **Magnify the image by pressing the center of the multi-selector, and then adjust the position by pressing the multi-selector up/down/left/right.**
   - The magnification scale changes each time you press the center.

4. **Press the shutter button halfway down to focus.**
   - The focus will be achieved at point of + (plus mark) in the center of the screen.

5. **Press the shutter button all the way down to shoot.**
   - The camera exits the magnified display after shooting.

Hint

- Use of a tripod is recommended to accurately identify the location you want to magnify.
- You can check the auto-focusing result by magnifying the displayed image. If you want to readjust the focus position, adjust the focus area on the magnified screen and then press the shutter button halfway down.

Note

- If you enlarge an area at the edge of the screen, the camera may not be able to focus.
- The exposure and white balance cannot be adjusted while the displayed image is being magnified.
- [AF in Focus Mag.] is unavailable in the following situations:
  - During movie shooting
  - When [Focus Mode] is set to [Continuous AF].
  - When [Focus Mode] is set to [Automatic AF] and the shooting mode is set to other than P/A/S/M.
  - When using a Mount Adaptor (sold separately).
- While the displayed image is being magnified, the following functions are unavailable:
  - [Eye AF]
  - [Pre-AF]
  - [Face/Eye Prior. in AF]

Related Topic

- Focus Magnifier

5-043-036-16(1) Copyright 2022 Sony Corporation

Auto Magnifier in MF

S&Q

Enlarges the image on the screen automatically to make manual focusing easier. This works in Manual Focus or Direct Manual Focus shooting.

1. **MENU → AF/MF (Focus) → [Focus Assistant] → [Auto Magnifier in MF] → [On].**
2. **Turn the focus ring to adjust the focus.**
   - The image is enlarged. You can magnify images further by pressing the center of the control wheel.

Hint

- You can set how long the image is to be shown magnified by selecting MENU → AF/MF (Focus) → [Focus Assistant] → [Focus Magnif. Time].

Note

- You cannot use [Auto Magnifier in MF] when shooting movies. Use the [Focus Magnifier] function instead.
- [Auto Magnifier in MF] is not available when a Mount Adaptor is attached. Use the [Focus Magnifier] function instead.

Related Topic

- Manual Focus
- Direct manual focus (DMF)
- Focus Magnif. Time (still image/movie)

5-043-036-16(1) Copyright 2022 Sony Corporation

Focus Magnifier

S&Q

You can check the focus by enlarging the image before shooting.
Unlike with [Auto Magnifier in MF], you can magnify the image without operating the focus ring.

1. **MENU → AF/MF (Focus) → [Focus Assistant] → [Focus Magnifier].**

2. **Press the center of the multi-selector to enlarge the image and select the area you want to enlarge by pressing the multi-selector up/down/left/right.**
   - Each time you press the center, the magnification scale will change.
   - You can set the initial magnification by selecting MENU → AF/MF (Focus) → [Focus Assistant] → [Initial Focus Mag.] or [Initial Focus Mag.].

3. **Confirm the focus.**
   - Press the (Delete) button to bring the magnified position into the center of an image.
   - When the focus mode is [Manual Focus], you can adjust the focus while an image is magnified. If [AF in Focus Mag.] is set to [Off], the [Focus Magnifier] function is canceled when the shutter button is pressed halfway down.
   - When the shutter button is pressed halfway down while an image is magnified during the auto-focusing, different functions are performed depending on the [AF in Focus Mag.] setting.
     - When [AF in Focus Mag.] is set to [On]: Auto-focusing is performed again.
     - When [AF in Focus Mag.] is set to [Off]: The [Focus Magnifier] function is canceled.
   - You can set how long the image is to be shown magnified by selecting MENU → AF/MF (Focus) → [Focus Assistant] → [Focus Magnif. Time].

To use the focus magnifier function by touch operation

You can magnify the image and adjust the focus by touching the monitor. Set [Touch Operation] to [On] beforehand.
When the focus mode is [Manual Focus], you can perform [Focus Magnifier] by double-tapping the area to focus on.

Hint

- [Focus Magnifier] is assigned to the 5 button (Custom button 5) in the default settings.
- While using the focus magnifier function, you can move the magnified area by dragging it on the touch panel.
- To exit the focus magnifier function, double-tap the monitor again. When [AF in Focus Mag.] is set to [Off], the focus magnifier function is ended by pressing the shutter button halfway down.

Related Topic

- Auto Magnifier in MF
- Focus Magnif. Time (still image/movie)

- Initial Focus Mag. (still image)
- Initial Focus Mag. (movie)
- AF in Focus Mag.
- Touch Operation

5-043-036-16(1) Copyright 2022 Sony Corporation

Focus Magnif. Time (still image/movie)

S&Q

Set the duration for which an image is to be magnified using the [Auto Magnifier in MF] or [Focus Magnifier] function.

1. **MENU → AF/MF (Focus) → [Focus Assistant] → [Focus Magnif. Time] → desired setting.**

Menu item details

2 Sec:
Magnifies the images for 2 seconds.

5 Sec:
Magnifies the images for 5 seconds.

No Limit:
Magnifies the images until you press the shutter button.

Related Topic

- Auto Magnifier in MF
- Focus Magnifier

5-043-036-16(1) Copyright 2022 Sony Corporation

Initial Focus Mag. (movie)

Sets the initial magnification scale for [Focus Magnifier] in the movie shooting mode.

1. **MENU → AF/MF (Focus) → [Focus Assistant] →[Initial Focus Mag.] → desired setting.**

Menu item details

x1.0:
Displays the image with the same magnification as the shooting screen.

x4.0:
Displays a 4.0-times enlarged image.

Related Topic

- Focus Magnifier

5-043-036-16(1) Copyright 2022 Sony Corporation

Initial Focus Mag. (still image)

Sets the initial magnification scale when using [Focus Magnifier]. Select a setting that will help you frame your shot.

1. **MENU → AF/MF (Focus) → [Focus Assistant] → [Initial Focus Mag.] → desired setting.**

Menu item details

x1.0:
Displays the image with the same magnification as the shooting screen.

x6.1:
Displays a 6.1-times enlarged image.

Related Topic

- Focus Magnifier

5-043-036-16(1) Copyright 2022 Sony Corporation

Focus Map

When shooting a movie, areas that are in focus and areas that are out of focus are displayed so that you can visually distinguish them. Areas behind the in-focus region are indicated by dots in a cool color **(A)** and those in front of the in-focus region are indicated by dots in a warm color **(B)**. Dots are not displayed in the in-focus range. Dots are not recorded in the actual movie.

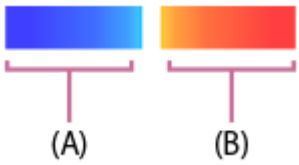

1. **MENU → AF/MF (Focus) → [Focus Assistant] → [Focus Map] → desired setting.**

Menu item details

On:
Displays the focus map.

Off:
Does not display the focus map.

Hint

- The focus map can also be output to an external monitor. To output the focus map to an external monitor, set [HDMI Info. Display] to [On].

Note

- [Focus Map] is unavailable in the following situations:
  - When [Focus Magnifier] is activated
  - While using the digital zoom function
  - While streaming
  - When using a lens that does not support phase detection AF
  - When a Mount Adaptor is attached
  - When the lens is not attached to the camera

Related Topic

- HDMI Info. Display

5-043-036-16(1) Copyright 2022 Sony Corporation

Peaking Display

Sets the peaking function, which enhances the outline of in-focus areas during shooting with Manual Focus or Direct Manual Focus. When shooting a movie, you can also use the peaking function with auto focus.

1. **MENU → AF/MF (Focus) → [Peaking Display] → Select a menu item and set the desired parameter.**

Menu item details

Peaking Display:
Sets whether to display peaking. ([On] / [Off])

Peaking Level:
Sets the level of enhancement of in-focus areas. ([High] / [Mid] / [Low])

Peaking Color:
Sets the color used to enhance in-focus areas. ([Red] / [Yellow] / [Blue] / [White])

Hint

- [Peaking Display Select] is assigned to the right side of the control wheel in the default settings.

Note

- Since the product recognizes sharp areas as in focus, the effect of peaking differs, depending on the subject and lens.
- The outline of in-focus ranges is not enhanced on devices connected via HDMI.

Related Topic

- Manual Focus
- Direct manual focus (DMF)

5-043-036-16(1) Copyright 2022 Sony Corporation

Exposure Comp. (still image/movie)

Normally, exposure is set automatically (auto exposure). Based on the exposure value set by auto exposure, you can make the entire image brighter or darker if you adjust [Exposure Comp.] to the plus side or minus side, respectively (exposure compensation).

1. **MENU → (Exposure/Color) → [Exposure Comp.] → [Exposure Comp.] → desired setting.**

   + (over) side:
   Images become brighter.
   - (under) side:
   Images become darker.

   - You can adjust the exposure compensation value within the range of -5.0 EV to +5.0 EV.
   - You can confirm the exposure compensation value that you set on the shooting screen.

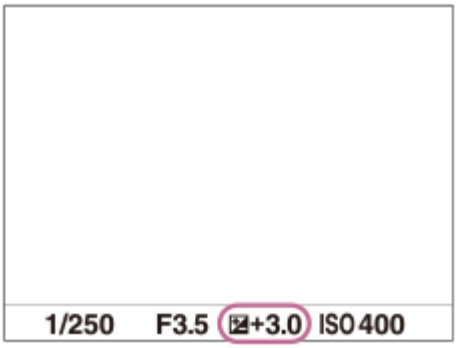

Hint

- Only a value between -3.0 EV and +3.0 EV with the equivalent image brightness appears on the screen when shooting. If you set an exposure compensation value outside this range, the image brightness on the screen will not be affected, but the value will be reflected in the recorded image.
- You can adjust the exposure compensation value within the range of -2.0 EV to +2.0 EV for movies.

Note

- You cannot perform the exposure compensation in the following shooting modes:
  – [Intelligent Auto]
- When using [Manual Exposure], you can perform the exposure compensation only when [ISO] is set to [ISO AUTO].

Related Topic

- Exposure step (still image/movie)
- Single Bracket

- Zebra Display

5-043-036-16(1) Copyright 2022 Sony Corporation

Histogram display

A histogram shows the luminance distribution, displaying how many pixels there are by luminance.
To display the histogram on the shooting screen or playback screen, press the DISP (Display Setting) button repeatedly.

How to read the histogram

The histogram indicates darker values toward the left and brighter values toward the right.
The histogram changes depending on the exposure compensation.
A peak at the right or left end of the histogram indicates that the image has an overexposed or underexposed area, respectively. You cannot correct such defects using a computer after shooting. Perform exposure compensation before shooting as necessary.

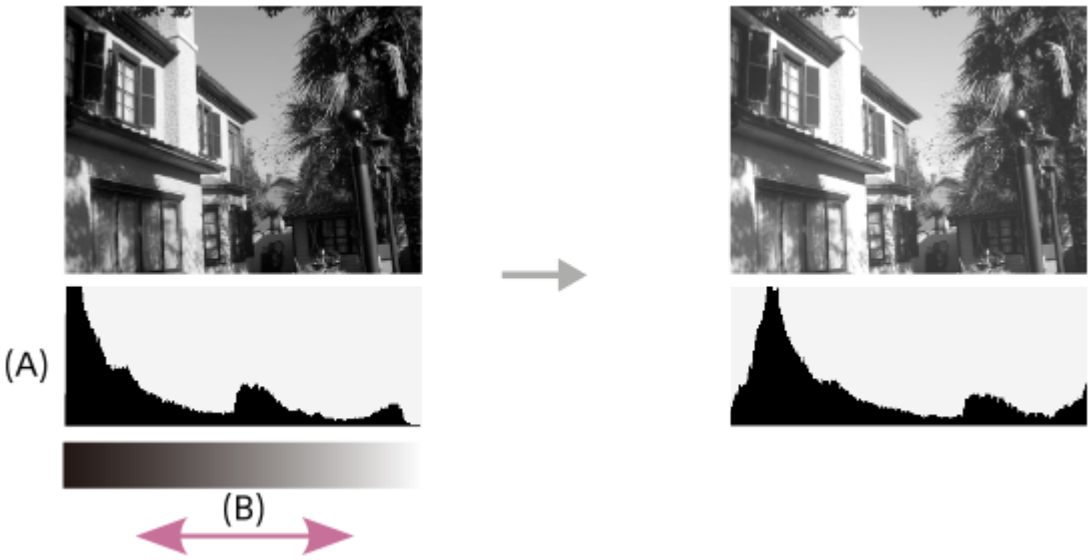

(A): Pixel count
(B): Brightness

Note

- The information in the histogram display does not indicate the final photograph. It is information about image displayed on the screen. The final result depends on the aperture value, etc.
- The histogram display is extremely different between shooting and playback in the following cases:
  - When shooting a low luminance subject such as a night scene

Related Topic

- Using the DISP (Display Setting) button
- Exposure Comp. (still image/movie)

5-043-036-16(1) Copyright 2022 Sony Corporation

Exposure step (still image/movie)

You can adjust the setting increment for the shutter speed, aperture, and exposure compensation values.

1. **MENU → (Exposure/Color) → [Exposure Comp.] → [Exposure step] → desired setting.**

Menu item details

0.5EV / 0.3EV

Related Topic

- Exposure Comp. (still image/movie)

5-043-036-16(1) Copyright 2022 Sony Corporation

Exposure Std. Adjust (still image/movie)

S&Q

Adjusts this camera's standard for the correct exposure value for each metering mode.

1. **MENU → (Exposure/Color) → [Exposure Comp.] → [Exposure Std. Adjust] → desired metering mode.**

2. **Select the desired value as the metering standard.**
   - You can set a value from -1 EV to +1 EV in 1/6 EV increments.

Metering Mode

The set standard value will be applied when you select the corresponding metering mode in MENU → (Exposure/Color) → [Metering] → [Metering Mode].
Multi/ Center/ Spot/ Entire Screen Average/ Highlight

Note

- The exposure compensation will not be affected when [Exposure Std. Adjust] is changed.
- The exposure value will be locked according to the value set for [Spot] during using spot AEL.
- The standard value for M.M (Metered Manual) will be changed according to the value set in [Exposure Std. Adjust].
- The value set in [Exposure Std. Adjust] is recorded in Exif data separately from the exposure compensation value. The amount of exposure standard value will not be added to the exposure compensation value.
- If you set [Exposure Std. Adjust] during bracketing shooting, the number of shots for the bracketing will be reset.

Related Topic

- Metering Mode (still image/movie)

5-043-036-16(1) Copyright 2022 Sony Corporation

D-Range Optimizer (still image/movie)

By dividing the image into small areas, the product analyzes the contrast of light and shadow between the subject and the background, and creates an image with the optimal brightness and gradation.

1. **MENU → (Exposure/Color) → [Color/Tone] → [D-Range Optimizer] → desired setting.**

Menu item details

Off:
Does not adjust brightness and gradation.

D-Range Optimizer:
If you select [D-Range Optimizer: Auto], the camera will automatically adjust the brightness and gradation. To optimize the gradation of a recorded image by individual areas, select an optimization level from [D-Range Optimizer: Lv1] (weak) to [D-Range Optimizer: Lv5] (strong).

Note

- In the following situations, [D-Range Optimizer] is fixed to [Off]:
  - When [Picture Profile] is set to other than [Off]
  - [Log Shooting] is set to other than [Off]
- When shooting with [D-Range Optimizer], the image may be noisy. Select the proper level by checking the recorded image, especially when you enhance the effect.

5-043-036-16(1) Copyright 2022 Sony Corporation

Metering Mode (still image/movie)

S&Q

Selects the metering mode that sets which part of the screen to measure for determining the exposure.

1. **MENU → (Exposure/Color) → [Metering] → [Metering Mode] → desired setting.**

Menu item details

Multi:
Measures light on each area after dividing the total area into multiple areas and determines the proper exposure of the entire screen (Multi-pattern metering).

Center:
Measures the average brightness of the entire screen, while emphasizing the central area of the screen (Center-weighted metering).

Spot:
Measures only inside the metering circle. This mode is suitable for measuring light on a specified part of the entire screen. The size of the metering circle can be selected from [Spot: Standard] and [Spot: Large]. The position of the metering circle depends the setting for [Spot Metering Point].

Entire Screen Avg.:
Measures the average brightness of the entire screen. The exposure will be stable even if the composition or the position of the subject changes.

Highlight:
Measures the brightness while emphasizing the highlighted area on the screen. This mode is suitable for shooting the subject while avoiding overexposure.

Hint

- The spot metering point can be coordinated with the focus area by using [Focus Point Link].
- When [Multi] is selected and [Face Priority in Multi Metering] is set to [On], the camera measures brightness based on detected faces.
- When [Metering Mode] is set to [Highlight] and the [D-Range Optimizer] function is activated, the brightness and the contrast will be corrected automatically by dividing the image into small areas and analyzing the contrast of light and shadow. Make settings based on the shooting circumstances.

Note

- [Metering Mode] is locked to [Multi] in the following shooting situations:
  - [Intelligent Auto]
  - When using a zoom function other than the optical zoom
- In [Highlight] mode, the subject may be dark if a brighter part exists on the screen.

Related Topic

- AE lock
- Spot Metering Point (still image/movie)

- Face Priority in Multi Metering (still image/movie)
- D-Range Optimizer (still image/movie)

5-043-036-16(1) Copyright 2022 Sony Corporation

Face Priority in Multi Metering (still image/movie)

S&Q

Sets whether the camera measures brightness based on detected faces when [Metering Mode] is set to [Multi].

1. **MENU → (Exposure/Color) → [Metering] → [Face Priority in Multi Metering] → desired setting.**

Menu item details

On:
The camera measures brightness based on detected faces.

Off:
The camera measures brightness using the [Multi] setting, without detecting faces.

Note

- When the shooting mode is set to [Intelligent Auto], [Face Priority in Multi Metering] is locked to [On].
- When [Face/Eye Prior. in AF] is set to [On] and [Face/Eye Subject] is set to an item other than [Human] under [Face/Eye AF], [Face Priority in Multi Metering] does not work.

Related Topic

- Metering Mode (still image/movie)

5-043-036-16(1) Copyright 2022 Sony Corporation

Spot Metering Point (still image/movie)

Sets whether to coordinate the spot metering position with the focus area when [Focus Area] is set to the following parameters:

- [Spot: S]/[Spot: M]/[Spot: L]
- [Expand Spot]
- [Tracking: Spot S]/[Tracking: Spot M]/[Tracking: Spot L]
- [Tracking: Expand Spot]

1. **MENU → (Exposure/Color) → [Metering] → [Spot Metering Point] → desired setting.**

Menu item details

Center:
The spot metering position does not coordinate with the focus area, but always meters brightness at the center.

Focus Point Link:
The spot metering position coordinates with the focus area.

Note

- Even if the spot metering position is coordinated with the [Tracking] start position, it will not be coordinated with the tracking of the subject.
- When [Focus Area] is set to the following parameters, the spot metering position is locked to the center.
  - [Wide]
  - [Zone]
  - [Center Fix]
  - [Tracking: Wide]/[Tracking: Zone]/[Tracking: Center Fix]

Related Topic

- Selecting the focus area (Focus Area)
- Metering Mode (still image/movie)

5-043-036-16(1) Copyright 2022 Sony Corporation

ND Filter

S&Q

Registers the optical density of the ND filter attached to the lens. The registered value is displayed on the home screen. This function can be used when the camera's system software (firmware) is Ver.6.00 or later.

1. **MENU → (Exposure/Color) → [Exposure] → [ND Filter] → Register the appropriate value.**

Menu item details

- */ 0.3 / 0.6 / 0.9 / 1.2 / 1.5 / 1.8 / 2.1 / 2.4

* If no ND filter is attached, set it to [-].

Relationship between optical density and transmittance

Optical Density of ND Filters	Transmittance
0.3	1/2
0.6	1/4
0.9	1/8
1.2	1/16
1.5	1/32
1.8	1/64
2.1	1/128
2.4	1/256

Hint

- The [ND Filter] setting is configured manually, so it may not match the optical density of the ND filter actually attached.
- The value registered in [ND Filter] can be used as metadata when editing movie clips in the desktop application Catalyst.

Related Topic

- Using the home screen
- Introduction to computer software (Imaging Edge Desktop/Catalyst)

5-043-036-16(1) Copyright 2022 Sony Corporation

AE lock

When the contrast between the subject and background is high, such as when shooting a backlit subject or a subject near a window, meter the light at a spot where the subject appears to have the appropriate brightness and lock the exposure before shooting. To reduce the brightness of the subject, meter the light at a spot brighter than the subject and lock the exposure of the entire screen. To make the subject brighter, meter the light at a spot darker than the subject and lock the exposure of the entire screen.

1. **MENU → (Setup) → [Operation Customize] → [Custom Key/Dial Set.] or [Custom Key/Dial Set.] → desired key, then assign [AEL toggle] to the key.**
2. **Adjust the focus on the spot at which the exposure is adjusted.**
3. **Press the button to which [AEL toggle] is assigned.**

   The exposure is locked, and (AE lock) is displayed.
4. **Focus on the subject again and press the shutter button.**
   - To cancel the exposure lock, press the button to which the [AEL toggle] function is assigned.

Hint

- If you select the [AEL hold] function in [Custom Key/Dial Set.] or [Custom Key/Dial Set.], you can lock the exposure as long as you are holding down the button. You cannot set the [AEL hold] function to [Left Button], [Right Button] or [Down Button].

Note

- [AEL hold] and [AEL toggle] are not available when using zoom functions other than optical zoom.

Related Topic

- Assigning frequently used functions to buttons and dials (Custom Key/Dial Set.)

5-043-036-16(1) Copyright 2022 Sony Corporation

AEL w/ Shutter

Sets whether to fix the exposure when you press the shutter button halfway down.
Select [Off] to adjust the focus and the exposure separately.

1. **MENU → (Exposure/Color) → [Metering] → [AEL w/ Shutter] → desired setting.**

Menu item details

Auto:
Fixes the exposure after adjusting the focus automatically when you press the shutter button halfway down when [Focus Mode] is set to [Single-shot AF]. When [Focus Mode] is set to [Automatic AF] and the product determines that the subject is moving, the locked exposure is canceled.

On:
Fixes the exposure when you press the shutter button halfway down.

Off:
Does not fix the exposure when you press the shutter button halfway down. Use this mode when you want to adjust focus and exposure separately.

Note

- When [AEL toggle] is assigned to any key using [Custom Key/Dial Set.] or [Custom Key/Dial Set.], operation using the key will be given priority over the [AEL toggle] settings.

5-043-036-16(1) Copyright 2022 Sony Corporation

Zebra Display

Sets a zebra pattern, which appears over part of an image if the brightness level of that part meets the IRE level that you have set. Use this zebra pattern as a guide to adjust the brightness.

1. **MENU → (Exposure/Color) → [Zebra Display] → Select a menu item and set the desired parameter.**

Menu item details

Zebra Display:
Sets whether to display the zebra pattern. ([Off] / [On])

Zebra Level:
Adjusts the brightness level of the zebra pattern. ([70] / [75] / [80] / [85] / [90]/ [95] / [100] / [100+])

Hint

- [Zebra Display Select] is assigned to the left side of the control wheel in the default settings.
- You can register values to check the correct exposure or overexposure as well as the brightness level for [Zebra Level]. The settings for correct exposure confirmation and overexposure confirmation are registered to [Custom 1] and [Custom 2] respectively in the default settings.
- To check the correct exposure, set a standard value and the range for the brightness level. The zebra pattern will appear on areas that fall within the range you set.
- To check the overexposure, set a minimum value for the brightness level. The zebra pattern will appear over areas with a brightness level equal to or higher than the value you set.

Note

- The zebra pattern is not displayed on devices connected via HDMI.

5-043-036-16(1) Copyright 2022 Sony Corporation

ISO (still image/movie)

S&Q

Sensitivity to light is expressed by the ISO number (recommended exposure index). The larger the number, the higher the sensitivity.

1. **ISO (ISO sensitivity) button → desired setting.**
   - You can also select MENU → (Exposure/Color) → [Exposure] → [ISO].
   - You can change the value by 1/3 EV steps by turning the front dial as well as by turning the control wheel. You can change the value by 1 EV steps by turning the rear dial.

Menu item details

ISO AUTO:
Sets the ISO sensitivity automatically.

ISO 50 – ISO 102400:
Sets the ISO sensitivity manually. Selecting a larger number increases the ISO sensitivity.

Hint

- You can change the range of ISO sensitivity that is set automatically in [ISO AUTO] mode. Select [ISO AUTO] and press the right side of the control wheel, and set the desired values for [ISO AUTO Maximum] and [ISO AUTO Minimum].
- The higher the ISO value, the more noise will appear on the images.
- The available ISO settings will differ depending on whether you are shooting still images, shooting movies, or shooting slow-motion/quick-motion movies.
- When shooting movies, ISO values between 100 and 32000 are available. If the ISO value is set to a value larger than 32000, the setting is automatically switched to 32000. When you finish recording the movie, the ISO value returns to the original setting.
- When shooting movies, ISO values between 100 and 32000 are available. If the ISO value is set to a value smaller than 100, the setting is automatically switched to 100. When you finish recording the movie, the ISO value returns to the original setting.
- The available range for ISO sensitivity varies depending on the setting for [Gamma] under [Picture Profile].
- The available ISO sensitivity range changes when outputting RAW movies to another device connected via HDMI.

Note

- [ISO] is set to [ISO AUTO] in the following shooting modes:
  — [Intelligent Auto]
- When the ISO sensitivity is set to a value lower than ISO 100, the range for recordable subject brightness (dynamic range) may decrease.
- When you select [ISO AUTO] with the shooting mode set to [P], [A], [S] or [M], the ISO sensitivity will be automatically adjusted within the set range.
- If you point the camera at an extremely strong light source while shooting images with a low ISO sensitivity, highlighted areas in the images may be recorded as black areas.

5-043-036-16(1) Copyright 2022 Sony Corporation

ISO Range Limit (still image/movie)

You can limit the range of ISO sensitivity when the ISO sensitivity is set manually.

1. **MENU → (Exposure/Color) → [Exposure] → [ISO Range Limit] → [Minimum] or [Maximum], and select the desired values.**

To set the range for [ISO AUTO]

If you want to adjust the range of ISO sensitivity that is automatically set in the [ISO AUTO] mode, select MENU → (Exposure/Color) → [Exposure] → [ISO] → [ISO AUTO], and then press the right side of the control wheel to select [ISO AUTO Maximum]/[ISO AUTO Minimum].

Note

- ISO sensitivity values beyond the specified range become unavailable. To select ISO sensitivity values beyond the specified range, reset [ISO Range Limit].

Related Topic

- ISO (still image/movie)

5-043-036-16(1) Copyright 2022 Sony Corporation

ISO AUTO Min. SS

If you select [ISO AUTO] when the shooting mode is P (Program Auto) or A (Aperture Priority), you can set the shutter speed at which the ISO sensitivity starts changing.
This function is effective for shooting moving subjects. You can minimize subject blurring while also preventing camera shake.

1. **MENU → (Exposure/Color) → [Exposure] → [ISO AUTO Min. SS] → desired setting.**

Menu item details

SLOWER (Slower)/SLOW (Slow):
The ISO sensitivity will start to change at shutter speeds slower than [Standard], so you can shoot images with less noise.

STD (Standard):
The camera automatically sets the shutter speed based on the focal length of the lens.

FAST (Fast)/FASTER (Faster):
The ISO sensitivity will start to change at shutter speeds faster than [Standard], so you can prevent camera shake and subject blurring.

1/8000 — 30":
The ISO sensitivity starts to change at the shutter speed you have set.

Hint

- The difference in shutter speed at which ISO sensitivity starts to change between [Slower], [Slow], [Standard], [Fast], and [Faster] is 1 EV.

Note

- If the exposure is insufficient even when the ISO sensitivity is set to [ISO AUTO Maximum] in [ISO AUTO], in order to shoot with an appropriate exposure, the shutter speed will be slower than the speed set in [ISO AUTO Min. SS].

Related Topic

- Program Auto
- Aperture Priority
- ISO (still image/movie)

5-043-036-16(1) Copyright 2022 Sony Corporation

Interchangeable Lens Digital Camera
ILME-FX30

White Balance (still image/movie)

S&Q

Corrects the tone effect of the ambient light condition to record a neutral white subject in white. Use this function when the color tones of the image did not come out as you expected, or when you want to change the color tones on purpose for photographic expression.

1. **MENU → (Exposure/Color) → [White Balance] → [White Balance] → desired setting.**

Menu item details

AWB Auto / AWB Auto: Ambience / AWB Auto: White / Daylight / Shade / Cloudy / Incandescent / -1 Fluor.: Warm White / 0 Fluor.: Cool White / +1 Fluor.: Day White / +2 Fluor.: Daylight / Underwater Auto :
When you select a light source that illuminates the subject, the product adjusts the color tones to suit to the selected light source (preset white balance). When you select [Auto], the product automatically detects the light source and adjusts the color tones.

C.Temp./Filter:
Adjusts the color tones depending on the light source. Achieves the effect of CC (Color Compensation) filters for photography.

Custom 1/Custom 2/Custom 3:
Memorizes the basic white color under the light conditions for the shooting environment.

Hint

- [White Balance] is assigned to the 2 button (Custom button 2) in the default settings.
- You can display the fine adjustment screen and perform fine adjustments of the color tones as required by pressing the right side of the control wheel. When [C.Temp./Filter] is selected, you can change the color temperature by turning the rear dial instead of pressing the right side of the control wheel.
- If the color tones do not come out as you expected in the selected settings, perform [WB bracket] shooting.
- AWB (Auto: Ambience), AWB (Auto: White) is displayed only when [Priority Set in AWB] is set to [Ambience] or [White].
- If you want to moderate abrupt white balance switching, such as when the recording environment switches during movie recording, you can change the white balance switching speed with the [Shockless WB] function.

Note

- [White Balance] is fixed to [Auto] in the following shooting modes:
  — [Intelligent Auto]
- You cannot select [Auto] or [Underwater Auto] under [White Balance] in the following situation:
  — When [Log Shooting] is set to [Cine EI Quick] or [Cine EI]
- If you use a mercury lamp or a sodium lamp as a light source, the accurate white balance will not be obtained because of the characteristics of the light. It is recommended to shoot images with a setting from [Custom 1] to [Custom 3].
- Do not cover the visible light and IR sensor when [White Balance] is set to [Auto]. If you do so, the light source may be erroneously classified, and the white balance may be adjusted to an inappropriate color.

Related Topic

- Capturing a standard white color to set the white balance (custom white balance)
- Priority Set in AWB (still image/movie)
- WB bracket
- Shockless WB

5-043-036-16(1) Copyright 2022 Sony Corporation

Interchangeable Lens Digital Camera
ILME-FX30

Capturing a standard white color to set the white balance (custom white balance)

In a scene where the ambient light consists of multiple types of light sources, it is recommended to use the custom white balance in order to accurately reproduce the whiteness. You can register 3 settings.

1. **MENU → (Exposure/Color) → [White Balance] → [White Balance] → Select from among [Custom 1] to [Custom 3], and then press the right side of the control wheel.**

2. **Select SET (custom white balance set), and then press the center of the control wheel.**

3. **Hold the product so that the white area fully covers the white-balance capture frame, and then press the center of the control wheel.**

   After the shutter sound is heard and the message [Captured the custom WB data.] is displayed, the calibrated values (Color Temperature and Color Filter) are displayed.
   - You can adjust the position of the white-balance capture frame by pressing the top/bottom/left/right side of the control wheel.
   - After capturing a standard white color, you can display the fine adjustment screen by pressing the right side of the control wheel. You can finely adjust the color tones as needed.
   - No shutter sound is produced in the following cases.
     - In the movie recording mode
     - When [Silent Mode] is set to [On]

4. **Press the center of the control wheel.**

   The calibrated values will be registered. The monitor returns to the MENU display while retaining the memorized custom white balance setting.
   - The registered custom white balance setting will remain memorized until overwritten by the another setting.

Note

- The message [Capturing of the custom WB failed.] indicates that the value is in the unexpected range, for example when the subject is too vivid. You can register the setting at this point, but it is recommended that you set the white balance again. When an error value is set, the indicator (custom white balance) turns orange on the recording information display. The indicator will be displayed in white when the set value is in the expected range.

5-043-036-16(1) Copyright 2022 Sony Corporation

Priority Set in AWB (still image/movie)

S&Q

Selects which tone to prioritize when shooting under lighting conditions such as incandescent light when [White Balance] is set to [Auto].

1. **MENU → (Exposure/Color) → [White Balance] → [Priority Set in AWB] → desired setting.**

Menu item details

Standard:
Shoots with standard auto white balance. The camera automatically adjusts the color tones.

Ambience:
Prioritizes the color tone of the light source. This is suitable when you want to produce a warm atmosphere.

White:
Prioritizes a reproduction of white color when the color temperature of the light source is low.

Related Topic

- White Balance (still image/movie)

5-043-036-16(1) Copyright 2022 Sony Corporation

Shutter AWB Lock

You can set whether or not to lock the white balance while the shutter button is pressed when [White Balance] is set to [Auto] or [Underwater Auto].

This function prevents unintentional changes to the white balance when shooting with the shutter button pressed halfway down.

1. **MENU → (Exposure/Color) → [White Balance] → [Shutter AWB Lock] → desired setting.**

Menu item details

Shutter Half Press:
Locks the white balance while the shutter button is pressed halfway down, even in the auto white balance mode.

Off:
Operates with the normal auto white balance.

About [AWB Lock Hold] and [AWB Lock Toggle]

You can also lock the white balance in the auto white balance mode by assigning [AWB Lock Hold] or [AWB Lock Toggle] to the custom key. If you press the assigned key during shooting, the white balance will be locked.
The [AWB Lock Hold] function locks the white balance by stopping the automatic white balance adjustment while the button is pressed.
The [AWB Lock Toggle] function locks the white balance by stopping the automatic white balance adjustment after the button is pressed once. When you press the button again, the AWB lock is released.

- If you want to lock the white balance while recording a movie in the auto white-balance mode, also assign [AWB Lock Hold] or [AWB Lock Toggle] to the custom key.

Related Topic

- White Balance (still image/movie)
- Assigning frequently used functions to buttons and dials (Custom Key/Dial Set.)

5-043-036-16(1) Copyright 2022 Sony Corporation

Shockless WB

S&Q

Sets the speed at which the white balance switches during movie recording, such as when the setting for [White Balance] or [Priority Set in AWB] is changed.

1. **MENU → (Exposure/Color) → [White Balance] → [Shockless WB] → desired setting.**

Menu item details

Off:
The white balance will switch immediately if you change the white balance setting during movie recording.

1 (Fast)/2/3 (Slow):
You can select the speed at which the white balance switches during movie shooting in order to make the white balance of the movie change more smoothly.
The speed settings in the order of fastest to slowest are [1 (Fast)], [2], and [3 (Slow)].

Note

- This function does not affect the speed at which the white balance changes when [White Balance] is set to [Auto] or [Underwater Auto].
- Even if a setting other than [Off] is selected, the following will be immediately applied to the movie regardless of the speed setting.
  - Fine adjustments to the color tones
  - Changes to the color temperature using [C.Temp./Filter]

Related Topic

- White Balance (still image/movie)

5-043-036-16(1) Copyright 2022 Sony Corporation

Log shooting

Log shooting can be divided into three methods: “Flexible ISO,” “Cine EI,” and “Cine EI Quick.” The differences between normal movie shooting and each Log shooting mode are as follows.

Item	Normal movie shooting	Log shooting: Flexible ISO	Log shooting: Cine EI	Log shooting: Cine EI Quick
Type of shooting	ITU709/BT.2020	Log	Log	Log
ISO sensitivity/EI (Exposure Index)	ISO sensitivity can be adjusted	ISO sensitivity can be adjusted	Shooting with EI (The ISO sensitivity for recording is locked to Base ISO)	Shooting with EI (The ISO sensitivity for recording is locked to Base ISO)
Base ISO	—	—	Setting is required	Set automatically according to the EI
Amount of freedom of color grading in post-production	Low	Middle	High	High

For details on Log shooting, refer to the following website.

https://helpguide.sony.net/di/pp/v1/en/index.html

5-043-036-16(1) Copyright 2022 Sony Corporation

Interchangeable Lens Digital Camera
ILME-FX30

Log Shooting Setting

Configures the settings for Log shooting.

1 **MENU → (Shooting) → [Image Quality/Rec] → [Log Shooting Setting] → desired setting.**

Menu item details

Log Shooting:
Switches the recording mode during Log shooting. (Off / Flexible ISO / Cine EI Quick / Cine EI)

Color Gamut:
Sets the color gamut. (S-Gamut3.Cine/S-Log3 / S-Gamut3/S-Log3)

Embed LUT File:
Sets whether to embed LUT files in recorded data. (On / Off)

[Log Shooting] mode details

Details of each Log shooting mode are as follows.

Flexible ISO:
A shooting mode that allows you to record S-Log material by adjusting the exposure settings including ISO sensitivity according to the shooting scene.

Cine EI Quick:
A shooting mode in which movies are recorded using a Base ISO, as is the case with the Cine EI mode, but the Base ISO switches automatically according to the adjusted EI value.

Cine EI:
A shooting mode that allows you to shoot with two Base ISO settings that can express clear images with the maximum dynamic range and suppressed noise.

Confirming the Log shooting settings displayed on the screen

Depending on the [Log Shooting] settings, the part marked with (A) indicating ISO sensitivity on the movie shooting screen changes.

- The displayed contents may differ from the actual display.

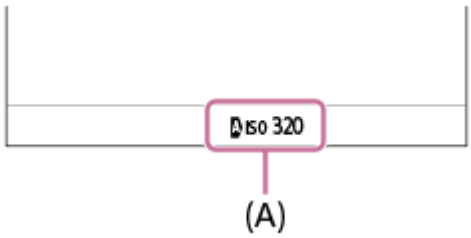

When [Log Shooting] is set to [Off] or [Flexible ISO]:
ISO sensitivity is displayed.
Example: **ISO 400**, **ISO 400**

When [Log Shooting] is set to [Cine EI Quick] or [Cine EI]:

The EI value, latitude, Base ISO ([L] for low sensitivity and [H] for high sensitivity) are displayed.

Example: **800EI/6.0E/L**

The second numerical value of the setting indicates how many steps of brightness information are assigned for bright areas (brightness higher than 18% gray). Areas brighter than these are overexposed.

Example: In “800EI/6.0E,” 6.0 steps are assigned on the bright side.

Hint

- To output RAW movies to another device connected via HDMI, set [Log Shooting] to an item other than [Off]. The [Color Gamut] setting is also applied to RAW movies output via HDMI.

Note

- [Embed LUT File] is locked to [Off] when using SD cards or SDHC cards.
- When [Log Shooting] is set to an item other than [Off], this may cause an error in the white balance custom setup. In such a case, temporarily set [Log Shooting] to [Off], perform the custom setup, and then reset [Log Shooting] to the desired setting.

Related Topic

- Select LUT
- Base ISO
- Exposure Index
- Picture Profile (still image/movie)
- HDMI Output Settings (movie)

5-043-036-16(1) Copyright 2022 Sony Corporation

Select LUT

Selects which LUT to apply to movies. You can choose the LUT from among three presets and 16 LUTs that you can register.

1. **MENU → (Exposure/Color) → [Color/Tone] → [Select LUT] → desired setting.**

Menu item details

S-Log3:
Emphasizes the expression of gradations from shadow to mid-tone. The tone of the images is similar to the characteristics of images that have been scanned from film for shooting.

s709:
Selects the s709 LUT for color tones similar to the film color preferred in movie and drama productions.

709(800%):
Selects the R709 LUT for contrast in color tones with true-to-life color reproduction.

User1–User16:
Selects registered LUTs. LUTs can be edited and registered by selecting User1–User16, and pressing the right side of the control wheel to open the setting detail screen.

Related Topic

- Log Shooting Setting
- Manage User LUTs
- Display LUT

5-043-036-16(1) Copyright 2022 Sony Corporation

Manage User LUTs

S&Q

You can register LUTs as User1–User16 on the camera. Also, you can change the settings for the registered LUT files.

Registering a LUT by using a memory card

1. Save the LUT file you want to register on a memory card.

   - Save the file to the following path.
     For SD cards: /Private/Sony/PRO/LUT
     For CFexpress Type A memory cards: /Sony/PRO/LUT

   - File format: CUBE file (.cube) for a 17-point or 33-point
   - File name: 63 alphanumeric characters (single-byte code) or less including ".cube"

2. MENU → (Exposure/Color) → [Color/Tone] → [Manage User LUTs] → [Import/Edit].

3. Select the user LUT area (User1–User16) in which to register the data.

4. Select [Media].

5. Select the memory card on which the LUT file is stored.

6. Select the file you want to register and select [OK].

Registering a LUT by using C3 Portal

This function can be used when the camera's system software (firmware) is Ver.3.00 or later.
Use the smartphone application Creators' App for enterprise for registration.
For details on Creators' App for enterprise, refer to the following website.
https://helpguide.sony.net/promobile/c3p_app/v1/en/index.html

A service contract is required to use C3 Portal.

1. Connect the camera to the smartphone application Creators' App for enterprise.

2. MENU → (Exposure/Color) → [Color/Tone] → [Manage User LUTs] → [Import/Edit].

3. Select the user LUT area (User1–User16) in which to register the data.

4. Select [Cloud(Private)] or [Cloud(Share)].

5. Select the file you want to register and select [OK].

Editing a LUT

The following edits can be made to a user LUT area.
Input: Selects either [S-Gamut3.Cine/S-Log3] or [S-Gamut3/S-Log3].
AE Level Offset: Sets the compensation value for the AE tracking level when using this LUT. (0EV, 1/3EV, 2/3EV, 1EV, 4/3EV, 5/3EV, 2EV).
Import: Registers a LUT file to the selected User number.

Delete: Deletes the LUT file registered to the selected User number.

To delete LUTs in bulk

1. MENU → (Exposure/Color) → [Color/Tone] → [Manage User LUTs] → [Delete All].
   - All of the LUTs registered to User1–User16 are deleted.

Note

- When using SD cards or SDHC cards, filenames for registering LUT files are displayed in the 8.3 format.

Related Topic

- Select LUT
- Display LUT
- C3 Portal

5-043-036-16(1) Copyright 2022 Sony Corporation

Base ISO

S&Q

Sets the ISO sensitivity (Base ISO) on which Cine EI mode shooting is based. You can select from two Base ISO values, one with a low sensitivity and one with a high sensitivity. By selecting the Base ISO according to the shooting environment, you can shoot while maintaining a balance in latitude of highlights and shadows.

1. **MENU → (Exposure/Color) → [Exposure] → [Base ISO] → desired setting.**

Menu item details

ISO 800:
Sets the base ISO sensitivity to ISO 800.

ISO 2500:
Sets the base ISO sensitivity to ISO 2500.

Related Topic

- Log Shooting Setting
- Base ISO Switch EI
- Exposure Index

5-043-036-16(1) Copyright 2022 Sony Corporation

Base ISO Switch EI

S&Q

Sets the EI (Exposure Index) value at which the Base ISO switches between low sensitivity and high sensitivity when [Log Shooting] is set to [Cine EI Quick].

1. **MENU → (Exposure/Color) → [Exposure] → [Base ISO Switch EI] → desired value.**

Menu item details

1000EI to 2500EI

Related Topic

- Base ISO
- Exposure Index

5-043-036-16(1) Copyright 2022 Sony Corporation

Exposure Index

Sets the EI (Exposure Index) value that is reflected on the monitor when [Display LUT] is set to [On].
In the Cine EI and Cine EI Quick modes, the brightness of the movie is adjusted according to the EI value, enabling you to check the results of post-production exposure sensitivity adjustments while shooting. The EI value can be set within the range of ±2EV from the value equal to the Base ISO.

1. **MENU → (Exposure/Color) → [Exposure] → [Exposure Index] → desired setting.**

Menu item details

When the Base ISO is ISO 800:
200EI–3200EI
When the Base ISO is ISO 2500:
640EI–10000EI

Related Topic

- Log Shooting Setting
- Base ISO
- Display LUT

5-043-036-16(1) Copyright 2022 Sony Corporation

Display LUT

The monitor can display images with the LUT reflected during movie shooting and playback for a preview of the image after color grading.

1. **MENU → (Setup) → [Display Option] → [Display LUT] → desired setting.**

Menu item details

On:
Displays images with the LUT reflected during movie shooting and playback.

Off:
Does not display images with the LUT reflected during movie shooting and playback.

Hint

- If you assign [Display LUT Switch] to [Custom Key/Dial Set.], you can switch [Display LUT] on and off simply by pressing a button.

Related Topic

- Select LUT
- Manage User LUTs

5-043-036-16(1) Copyright 2022 Sony Corporation

Interchangeable Lens Digital Camera
ILME-FX30

Creative Look (still image/movie)

S&Q

"Look" is a term referring to the looks and impressions of images generated by various factors, such as color, sharpness, brightness, etc. With [Creative Look], you can choose the finish of an image by selecting a preferred look from among preinstalled looks. In addition, you can fine-tune the contrast, highlights, shadows, fade, saturation, sharpness, sharpness range, and clarity for each "Look."

1. **MENU → (Exposure/Color) → [Color/Tone] → [Creative Look].**

2. **Select the desired "Look" or [Custom Look] using the top/bottom of the control wheel.**

3. **To adjust (Contrast), (Highlights), (Shadows), (Fade), (Saturation), (Sharpness), (Sharpness Range) and (Clarity), move to the right using the right side of the control wheel. Select the desired item using the right/left sides, and then select the value using the top/bottom sides.**

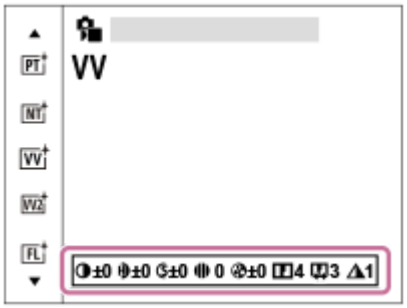

4. **When selecting [Custom Look], move to the right using the right side of the control wheel, and then select the desired "Look."**

   - Using [Custom Look], you can recall the same "Look" presets with slightly different settings.

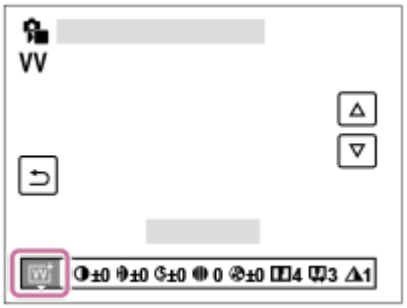

Menu item details

ST:
Standard finish for a wide range of subjects and scenes.

PT:
For capturing skin in a soft tone, ideally suited for shooting portraits.

NT:
The saturation and sharpness are lowered for shooting images in subdued tones. This is also suitable for capturing image material to be modified with a computer.

VV:
The saturation and contrast are heightened for shooting striking images of colorful scenes and subjects such as flowers, spring greenery, blue sky, or ocean views.

VV2:
Creates an image with bright and vivid colors with rich clarity.

FL:
Creates an image with moody finish by applying sharp contrast to the calm coloring as well as the impressive sky and colors of the greens.

IN:
Creates an image with matte textures by suppressing the contrast and saturation.

SH:
Creates an image with bright, transparent, soft, and vivid mood.

BW:
For shooting images in black and white monotone.

SE:
For shooting images in sepia monotone.

Registering preferred settings (Custom Look):
Select the six custom look (the boxes with numbers on the left side) to register preferred settings. Then select the desired settings using the right button.
You can recall the same “Look” presets with slightly different settings.

To adjust in greater detail

Based on each “Look,” items such as contrast can be adjusted to your liking. You can adjust not only the preset “Looks,” but also each [Custom Look], a function that allows you to register your favorite settings.
Select an item to be set by pressing the right/left sides of the control wheel, then set the value using the top/bottom sides of the control wheel.
When a setting value is changed from the default value, ✱ (asterisk) is added next to the “Look” icon displayed on the shooting screen.

Contrast:
The higher the value selected, the more the difference of light and shadow is accentuated, and the bigger the effect on the image. (-9 to +9)

Highlights:
Adjusts the brightness of the bright areas. When a higher value is selected, the image becomes brighter. (-9 to +9)

Shadows:
Adjusts the darkness of the dark areas. When a higher value is selected, the image becomes brighter. (-9 to +9)

Fade:
Adjusts the degree of fade. A larger value makes the effect greater. (0 to 9)

Saturation:
The higher the value selected, the more vivid the color. When a lower value is selected, the color of the image is restrained and subdued. (-9 to +9)

Sharpness:
Adjusts the sharpness. The higher the value selected, the more the contours are accentuated, and the lower the value selected, the more the contours are softened. (0 to 9)

Sharpness Range:
Adjust the range where the sharpness effect is applied. A larger value makes the sharpness effect apply to finer outlines. (1 to 5)

Clarity:
Adjusts the degree of clarity. A larger value makes the effect greater. (0 to 9)

To reset adjusted values for each “Look”

Adjusted values such as contrast that you have changed as desired can be collectively reset for each “Look.” Press the 🗑 (delete) button on the adjustment screen for the “Look” that you want to reset. All adjusted values that have been changed will return to their default values.

Hint

- For [Sharpness], [Sharpness Range], and [Clarity], take a test shot and either enlarge and play it on the camera monitor, or output it to a playback device to check the effect. Then, readjust the setting if needed.

Note

- [Creative Look] is fixed to [-] in the following situations:
  - [Intelligent Auto]
  - [Picture Profile] is set to other than [Off].
  - [Log Shooting] is set to other than [Off].
- When this function is set to [BW] or [SE], [Saturation] cannot be adjusted.
- In the movie mode, [Sharpness Range] cannot be adjusted.

5-043-036-16(1) Copyright 2022 Sony Corporation

Picture Profile (still image/movie)

Allows you to change the settings for the color, gradation, etc.
For details on “Picture Profile,” refer to
https://helpguide.sony.net/di/pp/v1/en/index.html
Although [Picture Profile] can be used for both still images and movies, the function is designed mainly for movies.

Customizing the picture profile

You can customize the picture quality by adjusting picture profile items such as [Gamma] and [Detail]. When setting these parameters, connect the camera to a TV or monitor, and adjust them while observing the picture on the screen.

1. **MENU → (Exposure/Color) → [Color/Tone] → [Picture Profile] → the profile you want to change.**
2. **Move to the item index screen by pressing the right side of the control wheel.**
3. **Select the item to change using the top/bottom sides of the control wheel.**
4. **Select the desired value using the top/bottom sides of the control wheel and press in the center.**

Using the preset of the picture profile

The default settings [PP1] through [PP11] for movies have been set in advance in the camera based on various shooting conditions.
MENU → (Exposure/Color) → [Color/Tone] → [Picture Profile] → desired setting.

PP1:
Example setting using [Movie] gamma.
PP2:
Example setting using [Still] gamma.
PP3:
Example setting of natural color tone using the [ITU709] gamma.
PP4:
Example setting of a color tone faithful to the ITU709 standard.
PP5:
Example setting using [Cine1] gamma.
PP6:
Example setting using [Cine2] gamma.
PP10:
Example setting for recording HDR movies using [HLG2] gamma.
PP11:
Example setting using [S-Cinetone] gamma.
PPLUT1–PPLUT4 (only when shooting movies):
Shoots and records movies with the user LUT applied.

To register user LUTs (PPLUT1–PPLUT4)

You can apply the LUT of your choice to the recorded images by assigning user LUTs registered using [Manage User LUTs] to PPLUT1–PPLUT4.

Setting procedure:

1. Select PPLUT1–PPLUT4 on the selection screen for [Picture Profile], and then press the right side of the control wheel.
2. Select [Basic Look] and press the center.
3. Select a LUT to use as [Basic Look] from the listed user LUTs.

HDR movie recording

The camera can record HDR movies when a gamma from [HLG], [HLG1] to [HLG3] is selected in the picture profile. Picture profile preset [PP10] provides an example setting for HDR recording. Movies recorded using [PP10] can be viewed with a wider range of brightness than usual when played back on a TV supporting Hybrid Log-Gamma (HLG). This way, even scenes with a wide range of brightness can be recorded and displayed faithfully, without looking under or over-exposed. HLG is used in HDR TV program production, as defined in the international standard Recommendation ITU-R BT.2100.

Items of the picture profile

Black Level

Sets the black level. (–15 to +15)

Gamma

Selects a gamma curve.

Movie: Standard gamma curve for movies

Still: Standard gamma curve for still images

S-Cinetone: Gamma curve designed to achieve cinematic gradations and color expressions. This setting enables shooting with softer color reproduction ideal for portrait shooting.

Cine1: Softens the contrast in dark parts and emphasizes gradation in bright parts to produce a relaxed color movie. (equivalent to HG4609G33)

Cine2: Similar to [Cine1] but optimized for editing with up to 100% video signal. (equivalent to HG4600G30)

Cine3: Intensifies the contrast in light and shade more than [Cine1] and strengthens gradation in black.

Cine4: Strengthens the contrast in dark parts more than [Cine3].

ITU709: Gamma curve that corresponds to ITU709.

S-Log3: Gamma curve for [S-Log3] with more similar features to film. This setting is based on the assumption that the picture will be processed after shooting.

HLG: Gamma curve for HDR recording. Equivalent to the HDR standard Hybrid Log-Gamma, ITU-R BT.2100.

HLG1: Gamma curve for HDR recording. Emphasizes noise reduction. However, shooting is restricted to a narrower dynamic range than with [HLG2] or [HLG3].

HLG2: Gamma curve for HDR recording. Provides a balance of dynamic range and noise reduction.

HLG3: Gamma curve for HDR recording. Wider dynamic range than [HLG2]. However, noise may increase.

- [HLG1], [HLG2], and [HLG3] all apply a gamma curve with the same characteristics, but each offers a different balance between dynamic range and noise reduction. Each has a different maximum video output level, as follows: [HLG1]: approx. 87%, [HLG2]: approx. 95%, [HLG3]: approx. 100%.

Black Gamma

Corrects gamma in low intensity areas.

[Black Gamma] is fixed at “0” and cannot be adjusted when [Gamma] is set to [HLG], [HLG1], [HLG2], or [HLG3].

Range: Selects the correcting range. (Wide / Middle / Narrow)

Level: Sets the correcting level. (-7 (maximum black compression) to +7 (maximum black stretch))

Knee

Sets knee point and slope for video signal compression to prevent over-exposure by limiting signals in high intensity areas of the subject to the dynamic range of your camera.
When [Gamma] is set to the following, and [Mode] is set to [Auto], [Knee] is unavailable. [Knee] can be used when [Mode] is set to [Manual].

- [Still]
- [Cine1]
- [Cine2]
- [Cine3]
- [Cine4]
- [S-Log3]
- [HLG]
- [HLG1]
- [HLG2]
- [HLG3]

Mode: Selects auto/manual settings.

- Auto: The knee point and slope are set automatically.
- Manual: The knee point and slope are set manually.

Auto Set: Settings when [Auto] is selected for [Mode].

- Max Point: Sets the maximum point of the knee point. (90% to 100%)
- Sensitivity: Sets the sensitivity. (High / Mid / Low)

Manual Set: Settings when [Manual] is selected for [Mode].

- Point: Sets the knee point. (75% to 105%)
- Slope: Sets the knee slope. (-5 (gentle) to +5 (steep))

Color Mode

Sets type and level of colors.
In [Color Mode], only [BT.2020] and [709] are available when [Gamma] is set to [HLG], [HLG1], [HLG2], or [HLG3].

Movie: Suitable colors when [Gamma] is set to [Movie].

Still: Suitable colors when [Gamma] is set to [Still].

S-Cinetone: Suitable colors when [Gamma] is set to [S-Cinetone].

Cinema: Suitable colors when [Gamma] is set to [Cine1] or [Cine2].

ITU709 Matrix: Colors corresponding to ITU709 standard (when combined with ITU709 gamma)

Black & White: Sets the saturation to zero for shooting in black and white.

S-Gamut3.Cine: Setting based on the assumption that the pictures will be processed after shooting. Used when [Gamma] is set to [S-Log3]. This setting allows you to shoot in a color space that can easily be converted for digital cinema.

S-Gamut3: Setting based on the assumption that the pictures will be processed after shooting. Used when [Gamma] is set to [S-Log3]. This setting allows you to shoot in a wide color space.

BT.2020: Standard color tone when [Gamma] is set to [HLG], [HLG1], [HLG2], or [HLG3].

709: Color tone when [Gamma] is set to [HLG], [HLG1], [HLG2], or [HLG3] and movies are recorded with HDTV color (BT.709).

709tone: Color comparable to the Sony professional cameras with Matrix off function.

Saturation

Sets the color saturation. (-32 to +32)

Color Phase

Sets the color phase. (-7 to +7)

Color Depth

Sets the color depth for each color phase. This function is more effective for chromatic colors and less effective for achromatic colors. The color looks deeper as you increase the setting value towards the positive side, and lighter as you decrease the value towards the negative side. This function is effective even if you set [Color Mode] to [Black & White].

[R] -7 (light red) to +7 (deep red)

[G] -7 (light green) to +7 (deep green)

[B] -7 (light blue) to +7 (deep blue)

[C] -7 (light cyan) to +7 (deep cyan)

[M] -7 (light magenta) to +7 (deep magenta)

[Y] -7 (light yellow) to +7 (deep yellow)

Detail

Sets items for [Detail].

Level: Sets the [Detail] level. (-7 to +7)

Adjust: The following parameters can be selected manually.

- Mode: Selects auto/manual setting. (Auto (automatic optimization) / Manual (The details are set manually.))
- V/H Balance: Sets the vertical (V) and horizontal (H) balance of DETAIL. (-2 (off to the vertical (V) side) to +2 (off to the horizontal (H) side))
- B/W Balance: Selects the balance of the lower DETAIL (B) and the upper DETAIL (W). (Type1 (off to the lower DETAIL (B) side) to Type5 (off to the upper DETAIL (W) side))
- Limit: Sets the limit level of [Detail]. (0 (Low limit level: likely to be limited) to 7 (High limit level: unlikely to be limited))
- Crispening: Sets the crispening level. (0 (shallow crispening level) to 7 (deep crispening level))
- Hi-Light Detail: Sets the [Detail] level in the high intensity areas. (0 to 4)

To copy the settings to another picture profile number

You can copy the settings of the picture profile to another picture profile number.

MENU → (Exposure/Color) → [Color/Tone] → [Picture Profile] → desired setting → [Copy].

To reset the picture profile to the default setting

You can reset the picture profile to the default setting. You cannot reset all picture profile settings at once.

MENU → (Exposure/Color) → [Color/Tone] → [Picture Profile] → desired setting → [Reset].

Note

- If you want to select different settings for movies and still images, add a check mark to [Picture Profile] under [Different Set for Still/Mv].
- If you develop RAW images with shooting settings, the following settings are not reflected:
  - Black Level
  - Black Gamma
  - Knee
  - Color Depth
- If you change [Gamma], the available ISO value range changes.
- There may be more noise in dark parts depending on the gamma settings. It may improve by setting the lens compensation to [Off].
- When using the S-Log3 gamma, noise becomes more noticeable compared to when using other gammas. If the noise is still considerable even after processing the images, it may be improved by shooting with a brighter setting. However, the dynamic range becomes narrower accordingly when you shoot with a brighter setting. We recommend checking the picture in advance by test shooting when using S-Log3.
- Setting [S-Log3] may cause an error in the white balance custom setup. In this case, perform custom setup with a gamma other than [S-Log3] first, and then reselect the [S-Log3] gamma.
- Setting PPLUT1–PPLUT4 may cause an error in the white balance custom setup. In this case, first perform the custom setup with a setting other than PPLUT1–PPLUT4, and then reselect PPLUT1–PPLUT4.

- If you set [Slope] to +5 in [Manual Set] under [Knee], [Knee] will be disabled.
- S-Gamut3.Cine and S-Gamut3 are color spaces exclusive to Sony. However, this camera's S-Gamut setting does not support the whole S-Gamut color space; it is a setting to achieve a color reproduction equivalent to S-Gamut.
- [Picture Profile] is fixed to [Off] in the following situation:
  - [Log Shooting] is set to other than [Off]

Related Topic

- Gamma Display Assist
- Different Set for Still/Mv

5-043-036-16(1) Copyright 2022 Sony Corporation

Drive Mode

S&Q

Select the appropriate mode for the subject, such as single shooting, bracketing shooting, or self-timer shooting.

1. **MENU → (Shooting) → [Drive Mode] → [Drive Mode] → desired setting.**

Menu item details

Single Shooting:
Normal shooting mode.

Self-timer(Single) :
Shoots an image using the self-timer after a designated number of seconds have elapsed since the shutter button was pressed.

BRKS Single Bracket:
Shoots a specified number of images, one by one, each with a different degrees of exposure.

BRKWB WB bracket:
Shoots a total of three images, each with different color tones according to the selected settings for white balance, color temperature and color filter.

BRKDRO DRO Bracket:
Shoots a total of three images, each at a different degree of D-Range Optimizer.

Related Topic

- Self-timer(Single)
- Single Bracket
- WB bracket
- DRO Bracket

5-043-036-16(1) Copyright 2022 Sony Corporation

Self-timer(Single)

Shoots an image using the self-timer after a designated number of seconds have elapsed since the shutter button was pressed. Use the 5-second/10-second self-timer when you are going to be in the picture, and use the 2-second self-timer to reduce camera-shake caused by pressing the shutter button.

1. **MENU → (Shooting) → [Drive Mode] → [Drive Mode] → [Self-timer(Single)].**
2. **Select the desired mode using the right/left side of the control wheel.**
3. **Adjust the focus and shoot the image.**

   A beep will sound, and a picture will be taken after the designated number of seconds have elapsed.

Menu item details

The mode determines the number of seconds until a picture is taken after the shutter button is pressed.

Self-timer(Single): 10 sec
Self-timer(Single): 5 sec
Self-timer(Single): 2 sec

Hint

- Press the shutter button again to stop the count of the self-timer.
- Select MENU → (Shooting) → [Drive Mode] → [Drive Mode] → [Single Shooting] to cancel the self-timer.
- Set [Audio signals] to [Off] to turn off the beeping sound during the self-timer countdown.
- To use the self-timer in bracket mode, select bracket mode under drive mode, then select MENU → (Shooting) → [Drive Mode] → [Bracket Settings] → [Selftimer during Bracket].

Related Topic

- Audio signals

5-043-036-16(1) Copyright 2022 Sony Corporation

Single Bracket

Shoots multiple images while automatically shifting the exposure from base to darker and then to lighter. You can select the image that suits your purpose after recording.
Since a single picture is taken each time you press the shutter button, you can adjust the focus or the composition for each shot.

1. **MENU → (Shooting) → [Drive Mode] → [Drive Mode] → [Single Bracket].**
2. **Select the desired mode using the right/left side of the control wheel.**
3. **Adjust the focus and shoot the image.**
   - Press the shutter button for each image.

Menu item details

For example, when [Single Bracket: 0.3EV 3 Image] is selected, three images are shot one at a time with the exposure value shifted up and down in increments of 0.3 EV.

Note

- When [ISO AUTO] is selected in [Manual Exposure] mode, the exposure is changed by adjusting the ISO value. If a setting other than [ISO AUTO] is selected, the exposure is changed by adjusting the shutter speed.
- When the exposure is compensated, the exposure is shifted based on the compensated value.
- Bracket shooting is unavailable in the following shooting modes:
  - [Intelligent Auto]

Related Topic

- Bracket Settings
- Indicator during bracket shooting

5-043-036-16(1) Copyright 2022 Sony Corporation

Interchangeable Lens Digital Camera
ILME-FX30

Indicator during bracket shooting

On the [Display All Info.] or [Histogram] screen, you can use the bracket indicator to confirm the bracket shooting settings.

Ambient light bracketing
3 images shifted by 0.3 EV steps
Exposure compensation ±0.0 EV

Hint

- During bracket shooting, guides equal to the number of images to be shot are displayed over/under the bracket indicator.
- When you start shooting, the guides will disappear one by one as the camera records images.

5-043-036-16(1) Copyright 2022 Sony Corporation

WB bracket

Shoots a total of three images, each with different color tones according to the selected settings for white balance, color temperature and color filter.

1. **MENU → (Shooting) → [Drive Mode] → [Drive Mode] → [WB bracket].**
2. **Select the desired mode using the right/left side of the control wheel.**
3. **Adjust the focus and shoot the image.**

Menu item details

White Balance Bracket: Lo:

Records a series of three images with small changes in the white balance (within the range of $10MK^{-1*}$).

White Balance Bracket: Hi:

Records a series of three images with large changes in the white balance (within the range of $20MK^{-1*}$).

* MK^{-1} is the unit that indicates the capability of color temperature conversion filters and indicates the same value as "mired."

Hint

- The last shot is shown on the auto review.

Related Topic

- Bracket Settings

5-043-036-16(1) Copyright 2022 Sony Corporation

DRO Bracket

S&Q

You can record a total of three images, each at a different degree of D-Range Optimizer value.

1. **MENU → (Shooting) → [Drive Mode] → [Drive Mode] → [DRO Bracket].**
2. **Select the desired mode using the right/left side of the control wheel.**
3. **Adjust the focus and shoot the image.**

Menu item details

DRO Bracket: Lo:
Records a series of three images with small changes in the D-Range Optimizer value (Lv 1, Lv 2, and Lv 3).

DRO Bracket: Hi:
Records a series of three images with large changes in the D-Range Optimizer value (Lv 1, Lv 3, and Lv 5).

Hint

- The last shot is shown on the auto review.

Related Topic

- Bracket Settings

5-043-036-16(1) Copyright 2022 Sony Corporation

Bracket Settings

You can set the self-timer in bracket shooting mode, and the shooting order for exposure bracketing and white balance bracketing.

1. **MENU → (Shooting) → [Drive Mode] → [Bracket Settings] → desired setting.**

Menu item details

Selftimer during Bracket:
Sets whether to use the self-timer during bracket shooting. Also sets the number of seconds until the shutter is released if using the self-timer.
(Off/2 Sec/5 Sec/10 Sec)

Bracket order:
Sets the order of exposure bracketing and white balance bracketing.
(0→-→+/-→0→+)

Related Topic

- Single Bracket
- WB bracket
- DRO Bracket

5-043-036-16(1) Copyright 2022 Sony Corporation

Interchangeable Lens Digital Camera
ILME-FX30

Interval Shoot Func.

You can automatically shoot a series of still images with the shooting interval and number of shots that you set in advance (Interval shooting). You can then create a time-lapse movie from the still images produced by interval shooting using the computer software Imaging Edge Desktop (Viewer). You cannot create a movie from the still images on the camera.

For details on time-lapse movies, refer to the support page for Imaging Edge Desktop.
https://www.sony.net/disoft/help/

1. **MENU → (Shooting) → [Drive Mode] → [Interval Shoot Func.] → [Interval Shooting] → [On].**

2. **MENU → (Shooting) → [Drive Mode] → [Interval Shoot Func.] → Select an item to set, and then select the desired setting.**

3. **Press the shutter button.**

   When the time set for [Shooting Start Time] has elapsed, shooting will start.

   - When the number of shots set for [Number of Shots] is completed, the camera will return to the standby screen for interval shooting.

Menu item details

Interval Shooting:
Sets whether to perform interval shooting. ([Off]/[On])

Shooting Start Time:
Sets the time from when you press the shutter button to when interval shooting starts. (1 second to 99 minutes 59 seconds)

Shooting Interval:
Sets the shooting interval (time from when one exposure starts to when the exposure for the next shot starts). (1 second to 60 seconds)

Number of Shots:
Sets the number of shots for interval shooting. (1 shot to 9 999 shots)

AE Tracking Sensitivity:
Sets the tracking sensitivity of the auto exposure against the change in luminance during interval shooting. If you select [Low], exposure changes during interval shooting will be smoother. ([High]/[Mid]/[Low])

Shoot Interval Priority:
Sets whether or not to prioritize the shooting interval when the exposure mode is [Program Auto] or [Aperture Priority] and the shutter speed becomes longer than the time set for [Shooting Interval]. ([Off]/[On])

Hint

- If you press the shutter button during interval shooting, interval shooting will end and the camera will return to the standby screen for interval shooting.
- To return to the normal shooting mode, set [Interval Shooting] to [Off].

- If you press a key to which one of the following functions has been assigned at the moment when shooting starts, the function will remain active during interval shooting even without you holding down the button.
  - [AEL hold]
  - [● AEL hold]
  - [AF/MF Selector Hold]
  - [Regist. AF Area hold]
  - [AWB Lock Hold]
- If you set [Display as Group] to [On], still images shot with the interval shooting function will be displayed in groups.
- Still images shot with interval shooting can be played back continuously on the camera. If you intend to create a movie using the still images, you can preview the result.

Note

- You may not be able to record the set number of images depending on the remaining battery level and the amount of free space on the recording medium. Supply power via USB while shooting, and use a memory card with sufficient space.
- When the shooting interval is short, the camera may get hot easily. Depending on the ambient temperature, you may not be able to record the set number of images because the camera may stop recording to protect the equipment.
- During interval shooting (including the time between pressing the shutter button and the start of shooting), you cannot operate the dedicated shooting setting screen or MENU screen. However, you can adjust some settings such as the shutter speed with using the customized dial or control wheel.
- During interval shooting, auto review is not displayed.
- Interval shooting is unavailable in the following situations:
  - The shooting mode is set to [Intelligent Auto]

Related Topic

- Cont. Play for Interval
- Supplying power from a wall outlet (wall socket)

5-043-036-16(1) Copyright 2022 Sony Corporation

JPEG/HEIF Switch

Switches the file format (JPEG / HEIF) of the still image to be recorded.
The JPEG format has general compatibility. You can view and edit JPEG files in various environments. The HEIF format has high compression efficiency. The camera can record with high image quality and small file sizes in the HEIF format. Depending on the computer or software, you may not be able to view or edit HEIF files. In addition, a HEIF-compatible environment is required to play back still images in the HEIF format. You can enjoy high-quality still images by connecting the camera and the TV via HDMI.

1. **MENU → (Shooting) → [Image Quality/Rec] → [JPEG/HEIF Switch] → desired setting.**

Menu item details

JPEG:
Performs digital processing on the RAW file and records it in the JPEG format. This setting gives priority to compatibility.

HEIF(4:2:0):
Performs digital processing on the RAW file and records it in the HEIF (4:2:0) format. This setting gives priority to image quality and compression efficiency.

HEIF(4:2:2):
Performs digital processing on the RAW file and records it in the HEIF (4:2:2) format. This setting gives priority to image quality.

Hint

- Depending on the setting for [JPEG/HEIF Switch], items related to the file format ([File Format], etc.) will switch to JPEG or HEIF.

Note

- HEIF image files recorded with this camera cannot be displayed on other cameras that do not support the HEIF file format. Be careful not to accidentally erase HEIF image files by formatting the memory card or deleting the files.
- When recording in the HEIF format with [HLG Still Image] set to [Off], the color space is recorded in sRGB. When [HLG Still Image] is set to [On], it is recorded in the BT.2100 color space (BT.2020 color gamut).

Related Topic

- Image Quality Settings: File Format (still image)

5-043-036-16(1) Copyright 2022 Sony Corporation

Image Quality Settings: File Format (still image)

Sets the file format for still images.

1. **MENU → (Shooting) → [Image Quality/Rec] → [Image Quality Settings] → [File Format] → desired setting.**

Menu item details

RAW:
Digital processing is not performed on this file format. Select this format to process images on a computer for professional purposes.

RAW & JPEG/RAW & HEIF:
A RAW image and a JPEG or HEIF image are created at the same time. This is suitable when you need two image files, a JPEG or HEIF for viewing, and a RAW for editing.

JPEG/HEIF:
The image is recorded in the JPEG or HEIF format.

- When [Recording Media] is set to [Sort Recording], you can select the file format for each slot from among RAW and JPEG, or RAW and HEIF.

About RAW images

- To open a RAW image file recorded with this camera, the software Imaging Edge Desktop is needed. With Imaging Edge Desktop, you can open a RAW image file, then convert it into a popular image format such as JPEG or TIFF, or readjust the white balance, saturation or contrast of the image.
- RAW images recorded with this camera have a resolution of 12 bits per pixel.

Note

- If you do not intend to edit the images on your computer, we recommend that you record in JPEG or HEIF format.
- An environment supporting the HEIF format is required to play back HEIF images.

Related Topic

- JPEG/HEIF Switch
- Image Quality Settings: JPEG Quality/HEIF Quality
- Image Quality Settings: JPEG Image Size/HEIF Image Size
- Rec. Media Settings (still image/movie): Recording Media (still image)
- Introduction to computer software (Imaging Edge Desktop/Catalyst)

5-043-036-16(1) Copyright 2022 Sony Corporation

Image Quality Settings: JPEG Quality/HEIF Quality

Selects the image quality when recording JPEG or HEIF images.

1. **MENU → (Shooting) → [Image Quality/Rec] → [Image Quality Settings] → [JPEG Quality]/[HEIF Quality] → desired setting.**

Menu item details

Extra fine/Fine/Standard/Light:
Since the compression rate increases from [Extra fine] to [Fine] to [Standard] to [Light], the file size decreases in that same order. This allows more files to be recorded on one memory card, but the image quality is lower.

- When [Recording Media] is set to [Sort Recording], you can select the image quality for each slot.

Related Topic

- Image Quality Settings: File Format (still image)
- Rec. Media Settings (still image/movie): Recording Media (still image)

5-043-036-16(1) Copyright 2022 Sony Corporation

Image Quality Settings: JPEG Image Size/HEIF Image Size

The larger the image size, the more detail will be reproduced when the image is printed on large-format paper. The smaller the image size, the more images can be recorded.

1. **MENU → (Shooting) → [Image Quality/Rec] → [Image Quality Settings] → [JPEG Image Size]/[HEIF Image Size] → desired setting.**

Menu item details

When [Aspect Ratio] is set to 3:2

Setting values	Pixel number (horizontal×vertical)
L: 26M	6192×4128 pixels
M: 13M	4384×2920 pixels
S: 6.4M	3014×2064 pixels

When [Aspect Ratio] is set to 4:3

Setting values	Pixel number (horizontal×vertical)
L: 23M	5504×4128 pixels
M: 11M	3888×2920 pixels
S: 5.7M	2752×2064 pixels

When [Aspect Ratio] is set to 16:9

Setting values	Pixel number (horizontal×vertical)
L: 22M	6192×3480 pixels
M: 11M	4384×2464 pixels
S: 5.4M	3104×1744 pixels

When [Aspect Ratio] is set to 1:1

Setting values	Pixel number (horizontal×vertical)
L: 17M	4128×4128 pixels
M: 8.5M	2912×2912 pixels
S: 4.3M	2064×2064 pixels

Related Topic

- Image Quality Settings: File Format (still image)
- Aspect Ratio

5-043-036-16(1) Copyright 2022 Sony Corporation

Aspect Ratio

1 **MENU → (Shooting) → [Image Quality/Rec] → [Aspect Ratio] → desired setting.**

Menu item details

3:2:
Same aspect ratio as 35 mm film

4:3:
The aspect ratio is 4:3.

16:9:
The aspect ratio is 16:9.

1:1:
The aspect ratio is 1:1.

5-043-036-16(1) Copyright 2022 Sony Corporation

HLG Still Image

By using gamma characteristics equivalent to HLG (Hybrid Log-Gamma: standard for HDR images), you can shoot still images with a wide dynamic range and a wide color gamut compatible with BT.2020.
[HLG Still Image] can only be set when shooting in the HEIF format. Set [JPEG/HEIF Switch] to [HEIF(4:2:0)] or [HEIF(4:2:2)], and [File Format] under [Image Quality Settings] to [HEIF] beforehand.

1. **MENU → (Shooting) → [Image Quality/Rec] → [HLG Still Image] → desired setting.**

Menu item details

On:
Shoots HLG still images.
Off:
Shoots normal still images.

Hint

- You can reproduce a wider range of brightness by playing back HLG still images on an HLG-compatible TV or monitor.
- You can display HLG still images on the camera's monitor in almost the same quality as when they are displayed on an HLG-(BT.2020-) compatible monitor by setting as follows.
  - [Gamma Display Assist]: [On]
  - [Gamma Disp. Assist Typ.]: [Auto] or [HLG(BT.2020)]

Note

- In the following situations, [HLG Still Image] is fixed to [Off]:
  - [JPEG/HEIF Switch] is set to [JPEG]
  - [File Format] under [Image Quality Settings] is set to [RAW] or [RAW & HEIF]
  - When a shooting mode other than P / A / S / M is set during still image shooting
  - When the ISO sensitivity is temporarily activated by the [Reg. Custom Shoot Set] function
  - When the [DRO Bracket] function under [Drive Mode] is temporarily activated by the [Reg. Custom Shoot Set] function
- When [HLG Still Image] is set to [On], the following functions are not available.
  - [D-Range Optimizer]
  - [Creative Look]
  - [DRO Bracket] under [Drive Mode]
  - [Picture Profile]
- When [HLG Still Image] is set to [On], the available ISO range changes.

Related Topic

- Image Quality Settings: File Format (still image)
- JPEG/HEIF Switch
- Gamma Display Assist

5-043-036-16(1) Copyright 2022 Sony Corporation

Color Space

The way colors are represented using combinations of numbers or the range of color reproduction is called “color space.” You can change the color space depending on the purpose of the image.

1. **MENU → (Shooting) → [Image Quality/Rec] → [Color Space] → desired setting.**

Menu item details

sRGB:
This is the standard color space of the digital camera. Use [sRGB] in normal shooting, such as when you intend to print out the images without any modification.

AdobeRGB:
This color space has a wide range of color reproduction. When a large part of the subject is vivid green or red, Adobe RGB is effective. The file name of the recorded image starts with “_.”

Note

- The [Color Space] setting is invalid when shooting images in the HEIF format. If [HLG Still Image] is set to [Off], images will be recorded with the sRGB color space. When [HLG Still Image] is set to [On], it is recorded in the BT.2100 color space (BT.2020 color gamut).
- [AdobeRGB] is for applications or printers that support color management and DCF2.0 option color space. Images may not be printed or viewed in the correct colors if you use applications or printers that do not support Adobe RGB.
- When displaying images that were recorded with [AdobeRGB] on non-Adobe RGB-compliant devices, the images will be displayed with low saturation.

Related Topic

- JPEG/HEIF Switch
- HLG Still Image

5-043-036-16(1) Copyright 2022 Sony Corporation

File Format (movie)

S&Q

Selects the movie file format.

1 **MENU → / (Shooting) → [Image Quality/Rec] → [File Format] → desired setting.**

Menu item details

File Format	Characteristics
XAVC HS 4K	Records 4K movies in the XAVC HS format. The XAVC HS format uses the HEVC codec, which has high compression efficiency. The camera can record movies with higher image quality than XAVC S movies but the same data volume. Long GOP compression is used for movies.
XAVC S 4K	Records movies in 4K resolution (3840×2160). Long GOP compression is used for movies.
XAVC S HD	Records movies in HD resolution (1920×1080). Long GOP compression is used for movies.
XAVC S-I 4K	Records movies in the XAVC S-I format. The XAVC S-I format uses Intra compression for movies. This format is more suitable for editing than Long GOP compression.
XAVC S-I HD	Records movies in the XAVC S-I format. The XAVC S-I format uses Intra compression for movies. This format is more suitable for editing than Long GOP compression.
XAVC S-I DCI 4K*	Records movies in the XAVC S-I format with DCI 4K resolution (4096×2160). The XAVC S-I format uses Intra compression for movies. This format is more suitable for editing than Long GOP compression.

* When the camera's system software (firmware) version is Ver.2.00 or later

- Intra/Long GOP is a movie compression format. Intra compresses the movie by frame, and Long GOP compresses multiple frames. Intra compression has better response and flexibility when editing, but Long GOP compression has better compression efficiency.

Note

- To play back XAVC HS 4K movies on a smartphone or computer, you need a device or software with high processing capability that supports the HEVC codec.

Related Topic

- Memory cards that can be used

5-043-036-16(1) Copyright 2022 Sony Corporation

Movie Settings (movie)

S&Q

Sets the frame rate, bit rate, color information, etc.

1. **MENU → / (Shooting) → [Image Quality/Rec] → [Movie Settings] → [Rec Frame Rate] → desired setting.**

2. **MENU → / (Shooting) → [Image Quality/Rec] → [Movie Settings] → [Record Setting] → desired setting.**

   Example of setting values

   200M 4:2:2 10bit
   (A) (B) (C)

   (A): Bit rate
   (B): Color sampling
   (C): Bit depth

   - The higher the bit rate, the higher the image quality.
   - Color sampling (4:2:2, 4:2:0) is the recording ratio of color information. The more uniform this ratio is, the better the color reproducibility, and it is possible to remove colors neatly even when compositing using a green screen.
   - Bit depth represents the gradation of luminance information. When the bit depth is 8 bits, 256 levels of gradation can be obtained. When the bit depth is 10 bits, 1024 levels of gradation can be obtained. A larger value enables smoother expression from dark to bright areas.
   - [4:2:2 10 bit] is a setting that assumes that the recorded movie will be edited on a computer. The playback environment for [4:2:2 10 bit] is limited.

Menu item details

When [File Format] is set to [XAVC HS 4K]

Rec Frame Rate	Record Setting	Size	Movie compression format
59.94p/50p	200M 4:2:2 10bit	3840×2160	Long GOP
59.94p/50p	150M 4:2:0 10bit	3840×2160	Long GOP
59.94p/50p	100M 4:2:2 10bit	3840×2160	Long GOP
59.94p/50p	75M 4:2:0 10bit	3840×2160	Long GOP
59.94p/50p	45M 4:2:0 10bit	3840×2160	Long GOP
23.98p*	100M 4:2:2 10bit	3840×2160	Long GOP
23.98p*	100M 4:2:0 10bit	3840×2160	Long GOP

Rec Frame Rate	Record Setting	Size	Movie compression format
23.98p*	50M 4:2:2 10bit	3840×2160	Long GOP
23.98p*	50M 4:2:0 10bit	3840×2160	Long GOP
23.98p*	30M 4:2:0 10bit	3840×2160	Long GOP
119.88p/100p	280M 4:2:2 10bit	3840×2160	Long GOP
119.88p/100p	200M 4:2:0 10bit	3840×2160	Long GOP

* Only when [NTSC/PAL Selector] is set to NTSC.

When [File Format] is set to [XAVC S 4K]

Rec Frame Rate	Record Setting	Size	Movie compression format
59.94p/50p	200M 4:2:2 10bit	3840×2160	Long GOP
59.94p/50p	150M 4:2:0 8bit	3840×2160	Long GOP
29.97p/25p	140M 4:2:2 10bit	3840×2160	Long GOP
29.97p/25p	100M 4:2:0 8bit	3840×2160	Long GOP
29.97p/25p	60M 4:2:0 8bit	3840×2160	Long GOP
23.98p*	100M 4:2:2 10bit	3840×2160	Long GOP
23.98p*	100M 4:2:0 8bit	3840×2160	Long GOP
23.98p*	60M 4:2:0 8bit	3840×2160	Long GOP
119.88p/100p	280M 4:2:2 10bit	3840×2160	Long GOP
119.88p/100p	200M 4:2:0 8bit	3840×2160	Long GOP

* Only when [NTSC/PAL Selector] is set to NTSC.

When [File Format] is set to [XAVC S HD]

Rec Frame Rate	Record Setting	Size	Movie compression format
59.94p/50p	50M 4:2:2 10bit	1920×1080	Long GOP
59.94p/50p	50M 4:2:0 8bit	1920×1080	Long GOP
59.94p/50p	25M 4:2:0 8bit	1920×1080	Long GOP
29.97p/25p	50M 4:2:2 10bit	1920×1080	Long GOP
29.97p/25p	50M 4:2:0 8bit	1920×1080	Long GOP
29.97p/25p	16M 4:2:0 8bit	1920×1080	Long GOP
23.98p*	50M 4:2:2 10bit	1920×1080	Long GOP
23.98p*	50M 4:2:0 8bit	1920×1080	Long GOP

Rec Frame Rate	Record Setting	Size	Movie compression format
119.88p/100p	100M 4:2:0 8bit	1920×1080	Long GOP
119.88p/100p	60M 4:2:0 8bit	1920×1080	Long GOP

* Only when [NTSC/PAL Selector] is set to NTSC.

When [File Format] is set to [XAVC S-I 4K]

Rec Frame Rate	Record Setting	Size	Movie compression format
59.94p/50p	600M 4:2:2 10bit/500M 4:2:2 10bit	3840×2160	Intra
29.97p/25p	300M 4:2:2 10bit/250M 4:2:2 10bit	3840×2160	Intra
23.98p*	240M 4:2:2 10bit	3840×2160	Intra

* Only when [NTSC/PAL Selector] is set to NTSC.

When [File Format] is set to [XAVC S-I DCI 4K]
(When the camera's system software (firmware) version is Ver.2.00 or later)

Rec Frame Rate	Record Setting	Size	Movie compression format
59.94p/50p	600M 4:2:2 10bit/500M 4:2:2 10bit	4096×2160	Intra
29.97p/25p	300M 4:2:2 10bit/250M 4:2:2 10bit	4096×2160	Intra
23.98p*	240M 4:2:2 10bit	4096×2160	Intra
24.00p	240M 4:2:2 10bit	4096×2160	Intra

* Only when [NTSC/PAL Selector] is set to NTSC.

When [File Format] is set to [XAVC S-I HD]

Rec Frame Rate	Record Setting	Size	Movie compression format
59.94p/50p	222M 4:2:2 10bit/185M 4:2:2 10bit	1920×1080	Intra
29.97p/25p	111M 4:2:2 10bit/93M 4:2:2 10bit	1920×1080	Intra
23.98p*	89M 4:2:2 10bit	1920×1080	Intra

* Only when [NTSC/PAL Selector] is set to NTSC.

Related Topic

- File Format (movie)

5-043-036-16(1) Copyright 2022 Sony Corporation

S&Q Mode Settings

When shooting slow-motion/quick-motion movies, you can select whether to shoot in the exposure mode for [S&Q Motion], or in the [Fixed/Variable] mode, which allows you to directly specify the shooting frame rate for slow-motion/quick-motion.
This function can be used when the camera's system software (firmware) is Ver.6.00 or later.

1. **MENU → (Shooting) → [Image Quality/Rec] → [Mode Settings] → desired setting.**

Menu item details

S&Q Mode:
You can select an exposure mode from [Exposure Mode] and perform slow-motion/quick-motion shooting.
[Rec Frame Rate], [Frame Rate], and [Record Setting] are set in [S&Q Settings].

Fixed/Variable:
You can select a shooting frame rate from [FPS] and perform slow-motion/quick-motion shooting.
With this setting, the recording frame rate and recording settings are determined by the values set in [Movie Settings].

Note

- When you select [Fixed/Variable], you cannot select [Exposure Mode] or [S&Q Settings].

Related Topic

- S&Q Motion: Exposure Mode
- FPS

5-043-036-16(1) Copyright 2022 Sony Corporation

S&Q Settings

You can record a moment that cannot be captured by the naked eye (slow-motion recording), or record a long-term phenomenon into a compressed movie (quick-motion recording). For example, you can record an intense sports scene, the moment when a bird starts to fly, a blooming flower, and a changing view of clouds or a starry sky. Sound will not be recorded.

- This function cannot be used when [S&Q Mode Settings] is set to [Fixed/Variable] (when the camera's system software (firmware) is Ver.6.00 or later).

1. **MODE (Mode) button → [S&Q Motion] → press the center of the control wheel.**
2. **Select MENU → (Shooting) → [Shooting Mode] → [S&Q Exposure Mode] → and select the desired setting of slow-motion/quick-motion (Program Auto, Aperture Priority, Shutter Priority, or Manual Exposure).**
3. **Select MENU → (Shooting) → [Image Quality/Rec] → [S&Q S&Q Settings] → Select an item to set, and then select the desired setting.**
4. **Press the REC (Recording) button to start recording.**
   - Press the REC (Recording) button again to stop recording.

Menu item details

S&Q Rec Frame Rate:
Selects the frame rate of the movie.

S&Q Frame Rate:
Selects the shooting frame rate.

S&Q Record Setting:
Selects the bit rate, color sampling, and bit depth of the movie.

- The values that can be set for [S&Q Rec Frame Rate] and [S&Q Record Setting] are the same as the setting values for [Movie Settings].
- The format of the recorded movie will be the same as the [File Format] setting.

Playback speed when [S&Q Rec Frame Rate] is set to 24.00p (When the camera's system software (firmware) version is Ver.2.00 or later)

You can select the frame rates listed below only when [File Format] is set to [XAVC S-I DCI 4K].

S&Q Frame Rate	S&Q Rec Frame Rate: 24.00p
48fps	2 times slower
24fps	Normal playback speed
12fps	2 times quick
6fps	4 times quick
3fps	8 times quick
2fps	12 times quick
1fps	24 times quick

Playback speed when [S&Q Rec Frame Rate] is set to a rate other than 24.00p

The playback speed will vary as below depending on the assigned [S&Q Rec Frame Rate] and [S&Q Frame Rate].

When [NTSC/PAL Selector] is set to NTSC

S&Q Frame Rate	S&Q Rec Frame Rate: 23.98p	S&Q Rec Frame Rate: 29.97p	S&Q Rec Frame Rate: 59.94p	S&Q Rec Frame Rate: 119.88p
240fps	10 times slower	8 times slower	4 times slower	2 times slower
120fps	5 times slower	4 times slower	2 times slower	Normal playback speed
60fps	2.5 times slower	2 times slower	Normal playback speed	2 times quick
30fps	1.25 times slower	Normal playback speed	2 times quick	4 times quick
15fps	1.6 times quick	2 times quick	4 times quick	8 times quick
8fps	3 times quick	3.75 times quick	7.5 times quick	15 times quick
4fps	6 times quick	7.5 times quick	15 times quick	30 times quick
2fps	12 times quick	15 times quick	30 times quick	60 times quick
1fps	24 times quick	30 times quick	60 times quick	120 times quick

When [NTSC/PAL Selector] is set to PAL

S&Q Frame Rate	S&Q Rec Frame Rate: 25p	S&Q Rec Frame Rate: 50p	S&Q Rec Frame Rate: 100p
200fps	8 times slower	4 times slower	2 times slower
100fps	4 times slower	2 times slower	Normal playback speed
50fps	2 times slower	Normal playback speed	2 times quick
25fps	Normal playback speed	2 times quick	4 times quick
12fps	2.08 times quick	4.16 times quick	8.33 times quick
6fps	4.16 times quick	8.33 times quick	16.66 times quick

S&Q Frame Rate	S&Q Rec Frame Rate: 25p	S&Q Rec Frame Rate: 50p	S&Q Rec Frame Rate: 100p
3fps	8.33 times quick	16.66 times quick	33.33 times quick
2fps	12.5 times quick	25 times quick	50 times quick
1fps	25 times quick	50 times quick	100 times quick

- [240fps]/[200fps] cannot be selected when [File Format] is set to following items:
  - XAVC HS 4K
  - XAVC S 4K
  - XAVC S-I 4K
  - XAVC S-I DCI 4K*
- [120fps]/[100fps] cannot be selected when [File Format] is set to [XAVC S-I DCI 4K]*

* When the camera's system software (firmware) version is Ver.2.00 or later

Hint

- For an estimation of recordable time, refer to "Recordable movie times."

Note

- In slow-motion/quick-motion recording, the actual shooting time differs from the time recorded in the movie. The recordable time displayed toward the top of the monitor shows the remaining recording time for the movie, not the remaining recording time on the memory card.
- In slow-motion recording, the shutter speed becomes faster and you may not be able to obtain the proper exposure. If this happens, decrease the aperture value or set the ISO sensitivity to a higher value.
- During slow-motion/quick-motion recording, the following functions are not available.
  - [Time Code Run]
  - [Time Code Output]

Related Topic

- S&Q Motion: Exposure Mode
- Recordable movie times
- Memory cards that can be used
- FPS
- S&Q Mode Settings

5-043-036-16(1) Copyright 2022 Sony Corporation

FPS

When [S&Q Mode Settings] is set to [Fixed/Variable], you can select whether to shoot normal movies or slow-motion/quick-motion movies.
You can record slow-motion/quick-motion movies by setting the shooting frame rate and the recording frame rate to different rates.
The playback speed of slow-motion/quick-motion movies is determined by the shooting frame rate and recording frame rate settings.
This function can be used when the camera's system software (firmware) is Ver.6.00 or later.

1. **MENU → (Shooting) → [Image Quality/Rec] → [FPS] → desired settings.**

Menu item details

Fixed/Variable Select:
Selects whether to record normal-speed movies or slow-motion/quick-motion movies. (Fixed / Variable)
If you select [Variable], the movie will be in slow motion or quick motion, and no audio will be recorded.

FPS Select:
When [Fixed/Variable Select] is set to [Variable], use [FPS Select] to set the frame rate during shooting. This determines the playback speed of slow-motion/quick-motion movies.
When the shooting frame rate is higher than the recording frame rate, the movie will be in slow motion, and when it is lower, the movie will be in quick motion.

Slow-motion/quick-motion movie playback speed

When [NTSC/PAL Selector] is set to NTSC

Shooting frame rate	Rec Frame Rate 23.98p	Rec Frame Rate 29.97p	Rec Frame Rate 59.94p	Rec Frame Rate 119.98p
240fps	10 times slower	8 times slower	4 times slower	2 times slower
120fps	5 times slower	4 times slower	2 times slower	Normal playback speed
60fps	2.5 times slower	2 times slower	Normal playback speed	2 times quick
30fps	1.25 times slower	Normal playback speed	2 times quick	4 times quick
15fps	1.6 times quick	2 times quick	4 times quick	8 times quick
8fps	3 times quick	3.75 times quick	7.5 times quick	15 times quick
4fps	6 times quick	7.5 times quick	15 times quick	30 times quick

Shooting frame rate	Rec Frame Rate 23.98p	Rec Frame Rate 29.97p	Rec Frame Rate 59.94p	Rec Frame Rate 119.98p
2fps	12 times quick	15 times quick	30 times quick	60 times quick
1fps	24 times quick	30 times quick	60 times quick	120 times quick

When [NTSC/PAL Selector] is set to PAL

Shooting frame rate	Rec Frame Rate 25p	Rec Frame Rate 50p	Rec Frame Rate 100p
200fps	8 times slower	4 times slower	2 times slower
100fps	4 times slower	2 times slower	Normal playback speed
50fps	2 times slower	Normal playback speed	2 times quick
25fps	Normal playback speed	2 times quick	4 times quick
12fps	2.08 times quick	4.16 times quick	8.33 times quick
6fps	4.16 times quick	8.33 times quick	16.66 times quick
3fps	8.33 times quick	16.66 times quick	33.33 times quick
2fps	12.5 times quick	25 times quick	50 times quick
1fps	25 times quick	50 times quick	100 times quick

- [240fps]/[200fps] cannot be selected when [File Format] is set to following items:
  - XAVC HS 4K
  - XAVC S 4K
  - XAVC S-I 4K
  - XAVC S-I DCI 4K
- [120fps]/[100fps] cannot be selected when [File Format] is set to [XAVC S-I DCI 4K].

You can select the frame rates listed below only when [File Format] is set to [XAVC S-I DCI 4K].

Shooting frame rate	Rec Frame Rate 24.00p
48fps	2 times slower
24fps	Normal playback speed
12fps	2 times quick
6fps	4 times quick
3fps	8 times quick
2fps	12 times quick
1fps	24 times quick

Hint

- For an estimation of recordable time, refer to “Recordable movie times.”

Note

- In slow-motion/quick-motion recording, the actual shooting time differs from the time recorded in the movie. The recordable time displayed toward the top of the monitor shows the remaining recording time for the movie, not the remaining recording time on the memory card.
- In slow-motion recording, the shutter speed becomes faster and you may not be able to obtain the proper exposure. If this happens, decrease the aperture value or set the ISO sensitivity to a higher value.
- During slow-motion/quick-motion recording, the following functions are not available.
  - [Time Code Run]
  - [Time Code Output]

5-043-036-16(1) Copyright 2022 Sony Corporation

Proxy Settings

S&Q

You can simultaneously record a low-bit-rate proxy movie when recording a movie or slow-motion recording/quick-motion recording.
Since proxy movies are small in file size, they are suitable for transferring to smartphones or uploading to websites.

1. **MENU → (Shooting) → [Image Quality/Rec] → [Px Proxy Settings] → Select an item to set, and then select the desired setting.**

Menu item details

Px Proxy Recording:
Selects whether to simultaneously record proxy movies. ([On] / [Off])

Px Proxy File Format:
Selects the recording format of the proxy movie. ([XAVC HS HD] / [XAVC S HD])

Px Proxy Rec. Settings:
Selects the bit rate, color sampling and bit depth of the proxy movie. ([16M 4:2:0 10bit] / [9M 4:2:0 10bit] / [6M 4:2:0 8bit])

Selectable proxy recording settings

Px Proxy File Format	Recording size	Recording frame rate	Px Proxy Rec. Settings	Compression codec
XAVC HS HD	1920×1080	Max. 59.94p/Max. 50p	16Mbps 4:2:0 10bit 9Mbps 4:2:0 10bit	MPEG-H HEVC/H.265
XAVC S HD	1280×720	Max. 59.94p/Max. 50p	6Mbps 4:2:0 8bit	MPEG-4 AVC/H.264

Hint

- Proxy movies are not displayed on the playback screen (single-image playback screen or image index screen). Px (proxy) is displayed over movies for which a proxy movie was simultaneously recorded.

Note

- Proxy movies cannot be played back on this camera.
- Proxy recording is not available in the following situations.
  Normal movie recording

  – [Rec Frame Rate] is set to [119.88p]/[100p]

  Slow-motion recording/quick-motion recording

- [S&Q Rec Frame Rate] is set to [119.88p]/[100p]
- [S&Q Frame Rate] is set to [120fps]/[100fps]

- Deleting/protecting movies that have proxy movies removes/protects both the original and proxy movies. You cannot delete/protect only original movies or proxy movies.
- Movies cannot be edited on this camera.

Related Topic

- Memory cards that can be used

5-043-036-16(1) Copyright 2022 Sony Corporation

Angle of view

The angle of view changes depending on the shooting mode and recording settings, etc.

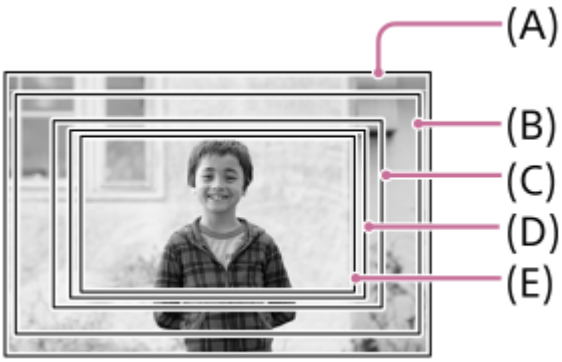

(A) When shooting still images
(B) When recording movies (other than 4K 119.88p/100p, and [RAW Output] under [HDMI Output Settings] set to [Off])
The angle of view becomes approximately 1.04 times the focal length indicated on the lens.
The magnification may vary for some lenses. For details, refer to the following support page.
https://www.sony.net/dics/fx30-l/
(C) When recording movies (other than 4K 119.88p/100p, and [RAW Output] under [HDMI Output Settings] set to [On])
The angle of view becomes approximately 1.3 times the focal length indicated on the lens.
(D) When shooting slow-motion/quick-motion movies (240fps/200fps)
The angle of view becomes approximately 1.5 times the focal length indicated on the lens.
(E) When recording movies (4K 119.88p/100p)
The angle of view becomes approximately 1.6 times the focal length indicated on the lens.

Related Topic

- File Format (movie)
- Movie Settings (movie)

5-043-036-16(1) Copyright 2022 Sony Corporation

Touch Operation

Sets whether or not to activate touch operations on the monitor.

1. **MENU → (Setup) → [Touch Operation] → [Touch Operation] → desired setting.**

Menu item details

On:
Activates touch operations.

On: Playback Only:
Activates touch operations only during playback.

Off:
Deactivates touch operations.

Related Topic

- Touch Func. in Shooting
- Touch operations on the monitor

5-043-036-16(1) Copyright 2022 Sony Corporation

Swipe Up

You can set whether to open the function menu when swiping upward on the shooting standby screen.

1. **MENU → (Setup) → [Touch Operation] → [Swipe Up] → desired setting.**

Menu item details

Open the Fn Menu:
The function menu opens by swiping up. You can close the function menu by swiping down from an area outside the function menu or tapping outside the function menu.

Off:
The function menu does not open by swiping up.

Note

- You cannot open the function menu by swiping up when [Touch Operation] is set to [On: Playback Only] or [Off], even if [Open the Fn Menu] is selected.

Related Topic

- Using the function menu
- Touch Operation

5-043-036-16(1) Copyright 2022 Sony Corporation

Touch Func. in Shooting

S&Q

Sets the operation activated by touching the screen during shooting.

1. **MENU → (Setup) → [Touch Operation] → [Touch Func. in Shooting] → desired setting.**

Menu item details

Touch Focus:
The focusing position is set by touching the screen during shooting.

Touch Tracking:
The subject is selected and tracking is started by touching the screen during shooting.

Touch Shutter:
Focuses on the touched subject and shoots images by touching the screen during shooting.

Off:
Disables touch operations during shooting.

Hint

- You can change the setting for [Touch Func. in Shooting] by touching / / / OFF (touch function icon) on the shooting screen.

Related Topic

- Focusing using touch operations (Touch Focus)
- Starting tracking with touch operations (Touch Tracking)
- Shooting with touch operations (Touch Shutter)
- Touch Operation

5-043-036-16(1) Copyright 2022 Sony Corporation

Interchangeable Lens Digital Camera
ILME-FX30

Focusing using touch operations (Touch Focus)

[Touch Focus] allows you to specify a position where you want to focus using touch operations. Select MENU → (Setup) → [Touch Operation] → [Touch Operation] → [On] beforehand.
This function is available when [Focus Area] is set to one of following parameters:

- [Wide]
- [Zone]
- [Center Fix]
- [Tracking: Wide]
- [Tracking: Zone]
- [Tracking: Center Fix]

1. **MENU → (Setup) → [Touch Operation] → [Touch Func. in Shooting] → [Touch Focus].**
   - You can change the setting for [Touch Func. in Shooting] by touching / / / OFF (touch function icon) on the shooting screen.

Specifying the position where you want to focus in the still image mode

When performing auto-focusing, you can specify the position where you want to focus using touch operations. After touching the monitor and specifying a position, press the shutter button halfway down to focus.

1. Touch the monitor.
   - Touch the subject to focus.
   - To cancel focusing with touch operations, touch (Touch focus release) icon or press the center of the control wheel.
2. Press the shutter button halfway down to focus.
   - Press the shutter button all the way down to shoot images.

Specifying the position where you want to focus in the movie recording mode

The camera will focus on the touched subject.

1. Touch the subject on which you want to focus before or during recording.
   - When [Focus Mode] is set to [Continuous AF], the focus mode temporarily switches to manual focus, and the focus can be adjusted using the focus ring (spot focus).
   - To cancel spot focus, touch (Touch focus release) icon or press the center of the control wheel.
   - When [Focus Mode] is set to [Manual Focus], the focus mode temporarily switches to [Continuous AF]. When the touched area is in focus, the focus mode returns to manual focus.

Hint

- In addition to the touch focus function, touch operations such as the following are also available.
  - The focusing frame for [Spot] and [Expand Spot] can be moved by dragging.
  - When shooting still images in the manual focusing mode, the focus magnifier can be used by double-tapping the monitor.

Note

- The touch focus function is not available in the following situations:
  - When shooting still images in the manual focusing mode
  - When using the digital zoom
  - When using the LA-EA4

Related Topic

- Touch Func. in Shooting
- Touch Operation
- Selecting the focus area (Focus Area)

5-043-036-16(1) Copyright 2022 Sony Corporation

Interchangeable Lens Digital Camera
ILME-FX30

Starting tracking with touch operations (Touch Tracking)

You can use touch operations to select a subject you want to track in the still image shooting mode and movie recording mode.
Select MENU → (Setup) → [Touch Operation] → [Touch Operation] → [On] in advance.

1. **MENU → (Setup) → [Touch Operation] → [Touch Func. in Shooting] → [Touch Tracking].**
   - You can change the setting for [Touch Func. in Shooting] by touching / / / OFF (touch function icon) on the shooting screen.

2. **Touch the subject that you want to track on the monitor.**

   Tracking will start.

Hint

- To cancel tracking, touch (Tracking release) icon or press the center of the control wheel.

Note

- [Touch Tracking] is unavailable in the following situations:
  - When [Focus Mode] is set to [Manual Focus].
  - When using the Smart Zoom, Clear Image Zoom and Digital Zoom
- If the focus mode is switched to [Manual Focus] while [Touch Func. in Shooting] is set to [Touch Tracking], the setting value for [Touch Func. in Shooting] will be changed to [Touch Focus].

Related Topic

- Touch Func. in Shooting
- Touch Operation

5-043-036-16(1) Copyright 2022 Sony Corporation

Interchangeable Lens Digital Camera
ILME-FX30

Shooting with touch operations (Touch Shutter)

The camera automatically focuses on the point you touch and shoots a still image. Set MENU → (Setup) → [Touch Operation] → [Touch Operation] to [On] in advance.

1. **Select MENU → (Setup) → [Touch Operation] → [Touch Func. in Shooting] → [Touch Shutter].**
   - You can change the setting for [Touch Func. in Shooting] by touching / / / OFF (touch function icon) on the shooting screen.

2. **Touch the subject on which you would like to focus while the (touch shutter) icon is displayed in the top right of the monitor.**

   The camera focuses on the subject you touched, and a still image is recorded.

Note

- The [Touch Shutter] function is unavailable in the following situations:
  - When shooting movies
  - When shooting slow-motion/quick-motion movies
  - When [Focus Mode] is set to [Manual Focus]
  - When [Focus Area] is set to [Spot] / [Expand Spot] / [Tracking: Spot S] / [Tracking: Spot M] / [Tracking: Spot L] / [Tracking: Expand Spot]
  - While using the digital zoom function
  - While using the [Clear Image Zoom]
  - While using the Smart Zoom
  - When a Mount Adaptor is attached
- If the focus mode is switched to [Manual Focus] while [Touch Func. in Shooting] is set to [Touch Shutter], the setting value for [Touch Func. in Shooting] will change to [Touch Focus].

Related Topic

- Touch Func. in Shooting
- Touch Operation

5-043-036-16(1) Copyright 2022 Sony Corporation

Silent Mode (still image/movie)

S&Q

Sets whether or not to shoot without shutter sounds or electronic sounds.

1. **MENU → / (Shooting) → [Shutter/Silent] → [Silent Mode] → desired setting.**

Menu item details

On:
Does not produce a shutter sound or electronic sounds.

Off:
Produces a shutter sound and electronic sounds.

Note

- Use the silent mode function on your own responsibility, while taking sufficient consideration to the privacy and portrait rights of the subject.
- Even if [Silent Mode] is set to [On], the operating sound of the aperture and focus will sound.

5-043-036-16(1) Copyright 2022 Sony Corporation

Release w/o Lens (still image/movie)

Sets whether or not the shutter can be released when no lens is attached.

1. **MENU → / (Shooting) → [Shutter/Silent] → [Release w/o Lens] → desired setting.**

Menu item details

Enable:
Releases the shutter when no lens is attached. Select [Enable] when attaching the product to an astronomical telescope, etc.

Disable:
Does not release the shutter when a lens is not attached.

Note

- Correct metering cannot be achieved when you use lenses that do not provide a lens contact, such as the lens of an astronomical telescope. In such cases, adjust the exposure manually by checking it on the recorded image.

5-043-036-16(1) Copyright 2022 Sony Corporation

Release w/o Card

S&Q

Sets whether the shutter can be released when no memory card has been inserted.

1. **MENU → (Shooting) → [Shutter/Silent] → [Release w/o Card] → desired setting.**

Menu item details

Enable:
Releases the shutter even if no memory card has been inserted.

Disable:
Does not release the shutter when no memory card has been inserted.

Note

- When no memory card has been inserted, the images shot will not be saved.
- The default setting is [Enable]. It is recommended that you select [Disable] prior to actual shooting.

5-043-036-16(1) Copyright 2022 Sony Corporation

Anti-flicker Set.

S&Q

To reduce the impact of flickering from artificial light sources (such as fluorescent or LED light), you can set the shutter speed more finely than usual.
This function reduces differences in exposure and color tone between the upper and lower parts of an image shot under artificial light sources.

1. **MENU → / (Shooting) → [Shutter/Silent] → [Anti-flicker Set.] → desired setting item.**

Menu item details

Var. Shutter:
Reduces the appearance of band-like light and dark shading on the image by finely adjusting the shutter speed according to the flickering frequency. ([On]/[Off])
[Var. Shutter] can only be selected when the camera is in an exposure mode that allows you to manually adjust the shutter speed (both still images and movies).

Var. Shutter Set.:
Sets the shutter speed when [Var. Shutter] is set to [On].
Select a shutter speed that reduces the impact of flickering while checking the monitor. The faster you set the shutter speed, the more likely there is to be a difference between the monitor display before shooting and the recorded image. Make sure that the impact of flickering is reduced in the recorded image.

Hint

- When [Var. Shutter Select] is assigned to a custom key, you can switch the [Var. Shutter] function on and off by pressing the key.
- When [Var. Shutter] is set to [On], the shutter-speed denominator is displayed in the decimal format (high-resolution shutter speed).
  For example, if the normal shutter speed is set to 1/250 second, the value will be displayed as 250.6. (The numbers may differ from the actual ones.)
- On the [Var. Shutter Set.] screen, you can finely adjust the high-resolution shutter speed using the rear dial or control wheel as in the following example.
  250.6 → 253.3 → 256.0 → 258.8*
  You can change the high-resolution shutter speed to an integral multiple value using the front dial, as in the following example.
  125.3 (2 times) ← 250.6 → 501.3 (1/2 times) *
  * The numbers may differ from the actual ones.
- When [Var. Shutter] is set to [On], the high-resolution shutter speed can be finely adjusted on the shooting standby screen. If you want to change the high-resolution shutter speed to an integral multiple value even on the shooting standby screen, assign [Shutter Speed(step)] to a custom key or the “My Dial” setting.
- When you change the [Var. Shutter] setting from [On] to [Off], the high-resolution shutter speed switches to the closest value among normal shutter speeds.

Note

- When [Var. Shutter] is set to [On], the release time lag may be longer.
- Even when [Var. Shutter] is set to [On], depending on the frequency of the light source, you may be unable to set the appropriate shutter speed and eliminate the impact of flickering. In that case, try the following.
  — Setting a slower shutter speed

— Switching to another shutter type

- When you press the shutter button halfway down, flickering may appear temporarily.
- High-resolution shutter speed setting values cannot be registered to [Reg. Custom Shoot Set]. The default shutter speed value will be applied instead.

Related Topic

- Assigning frequently used functions to buttons and dials (Custom Key/Dial Set.)
- Changing the function of the dial temporarily (My Dial Settings)

5-043-036-16(1) Copyright 2022 Sony Corporation

Interchangeable Lens Digital Camera
ILME-FX30

The zoom features available with this product

The zoom feature of the product provides a higher magnification zoom by combining various zoom features. The icon displayed on the screen changes, according to the selected zoom feature.

When a power zoom lens is mounted:

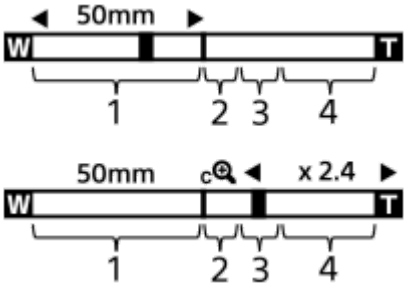

When a lens other than a power zoom lens is mounted:

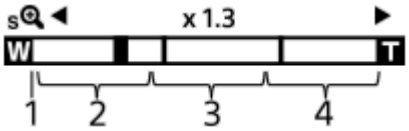

1. **Optical zoom range**
   Zoom images in the zoom range of a lens.
   When a power zoom lens is mounted, the zoom bar of the optical zoom range is displayed.
   When a lens other than a power zoom lens is mounted, the zoom slider becomes locked at the left end of the zoom bar while the zoom position is in the optical zoom range. The magnification is displayed as “×1.0.”

2. **Smart Zoom range** ( )
   Zoom images without causing the original quality to deteriorate by partially cropping an image (only when [JPEG Image Size]/[HEIF Image Size] is set to [M] or [S]).

3. **Clear Image Zoom range** ( )
   Zoom images using an image process with less deterioration.
   When you set [Zoom Range] to [Clear Image Zoom] or [Digital Zoom], you can use this zoom function.

4. **Digital Zoom range** ( )
   You can magnify images using an image process.
   When you set [Zoom Range] to [Digital Zoom], you can use this zoom function.

Hint

- The default setting for the [Zoom Range] is [Optical zoom only].
- The default setting for the [JPEG Image Size]/[HEIF Image Size] is [L]. To use the smart zoom, change [JPEG Image Size]/[HEIF Image Size] to [M] or [S].

Note

- The Smart Zoom, Clear Image Zoom and Digital Zoom functions are not available when shooting in the following situations:
  - [File Format] is set to [RAW] or [RAW & JPEG]/[RAW & HEIF].
  - [Rec Frame Rate] is set to [119.88p]/[100p].
  - During slow-motion/quick-motion shooting with the [S&Q Frame Rate] set to [240fps]/[200fps] or [120fps]/[100fps]

- You cannot use the Smart Zoom function with movies.
- When you use a zoom function other than the optical zoom, the [Focus Area] setting is disabled and the AF operates with priority on and around the center area.
- When you use the Smart Zoom, Clear Image Zoom or Digital Zoom function, [Metering Mode] is locked to [Multi].
- When using the Smart Zoom, Clear Image Zoom or Digital Zoom function, the following functions are not available:
  - Face/Eye Prior. in AF
  - Face Priority in Multi Metering
  - Tracking function

Related Topic

- Clear Image Zoom/Digital Zoom
- Zoom Range (still image/movie)
- About zoom scale

5-043-036-16(1) Copyright 2022 Sony Corporation

Clear Image Zoom/Digital Zoom

S&Q

When you use a zoom function other than the optical zoom, you can exceed the zoom range of the optical zoom.

1. **MENU → / (Shooting) → [Zoom] → [Zoom Range] → Select [Clear Image Zoom] or [Digital Zoom].**

2. **Zoom using the W/T (zoom) lever.**
   - You can also assign the [Zoom] function to the desired key by selecting MENU → (Setup) → [Operation Customize] → [Custom Key/Dial Set.] or [Custom Key/Dial Set.].
   - If you assign [Zoom Operation (T)] or [Zoom Operation (W)] to the desired key in advance by selecting MENU → (Setup) → [Operation Customize] → [Custom Key/Dial Set.] or [Custom Key/Dial Set.], you can zoom in and out simply by pressing that key.

Hint

- When a power zoom lens is attached, you can use the zoom lever or zoom ring to magnify the image. If you exceed the optical zoom magnification, you can switch to a zoom function other than the optical zoom with the same operation.
- Even when you use [Clear Image Zoom] or [Digital Zoom] with a power zoom lens attached, the optical zoom is used up to the telephoto end of the lens.

Related Topic

- Zoom Range (still image/movie)
- The zoom features available with this product
- About zoom scale
- Assigning frequently used functions to buttons and dials (Custom Key/Dial Set.)

5-043-036-16(1) Copyright 2022 Sony Corporation

Zoom Range (still image/movie)

You can select the zoom setting of the product.

1. **MENU → / (Shooting) → [Zoom] → [Zoom Range] → desired setting.**

Menu item details

Optical zoom only:
Limits the zoom range to the optical zoom. You can use the Smart Zoom function if you set [JPEG Image Size]/[HEIF Image Size] to [M] or [S].

Clear Image Zoom :
Select this setting to use Clear Image Zoom. Even if the zoom range exceeds the optical zoom, the product magnifies images using an image process with less deterioration.

Digital Zoom :
When the zoom range of the Clear Image Zoom is exceeded, the product magnifies images to the largest scale. However, the image quality will deteriorate.

Note

- Set [Optical zoom only] if you want to magnify images within the range in which image quality does not deteriorate.

Related Topic

- The zoom features available with this product
- About zoom scale

5-043-036-16(1) Copyright 2022 Sony Corporation

Interchangeable Lens Digital Camera
ILME-FX30

Zoom Lever Speed (still image/movie)

Sets the zoom speed when using the W/T (zoom) lever of the camera. The zoom speed can be set in two increments. It can also be set separately for shooting standby and movie recording.

1. **MENU → (Shooting) → [Zoom] → [Zoom Lever Speed] → desired setting item.**

Menu item details

1st Zoom Spd. STBY :
Sets the zoom speed of the first increment for shooting standby. (1 (Slow) to 8 (Fast))

2nd Zoom Spd. STBY :
Sets the zoom speed of the second increment for shooting standby. (1 (Slow) to 8 (Fast))

1st Zoom Spd. REC :
Sets the zoom speed of the first level increment for recording. (1 (Slow) to 8 (Fast))

2nd Zoom Spd. REC :
Sets the zoom speed of the second level increment for recording. (1 (Slow) to 8 (Fast))

Hint

- If a high speed is set for shooting standby and a slow speed is set for movie recording, the angle of view can be changed quickly during shooting standby and slowly during movie recording.

Note

- The zoom speed does not change when you operate the zoom ring of the lens or the zoom lever of the power zoom lens.
- If you increase the zoom speed, the sound of zoom operations may be recorded.

Related Topic

- Clear Image Zoom/Digital Zoom

5-043-036-16(1) Copyright 2022 Sony Corporation

Custom Key Z. Speed (still image/movie)

S&Q

Sets the zoom speed when using the custom key to which [Zoom Operation (T)] / [Zoom Operation (W)] is assigned. This can be set separately for shooting standby and movie recording.

1. **MENU → / (Shooting) → [Zoom] → [Custom Key Z. Speed] → desired setting item.**

Menu item details

Fixed Speed STBY :
Sets the zoom speed during shooting standby. (1 (Slow) to 8 (Fast))

Fixed Speed REC :
Sets the zoom speed during movie recording. (1 (Slow) to 8 (Fast))

Hint

- If a high speed is set for [Fixed Speed STBY] and a slow speed is set for [Fixed Speed REC], the angle of view can be changed quickly during shooting standby and slowly during movie recording.

Note

- The zoom speed does not change when you operate the zoom ring of the lens or the zoom lever of the power zoom lens.
- If you increase the zoom speed, the sound of zoom operations may be recorded.

Related Topic

- Clear Image Zoom/Digital Zoom

5-043-036-16(1) Copyright 2022 Sony Corporation

Remote Zoom Speed (still image/movie)

S&Q

Sets the zoom speed when performing zoom operations using the remote commander (sold separately) or the remote shooting function via a smartphone. This can be set separately for shooting standby and movie recording.

1. **MENU → / (Shooting) → [Zoom] → [Remote Zoom Speed] → desired setting item.**

Menu item details

Speed Type:
Sets whether or not to lock the zoom speed. ([Variable]/[Fix])

Fixed Speed STBY :
Sets the zoom speed during shooting standby when [Speed Type] is set to [Fix]. (1 (Slow) to 8 (Fast))

Fixed Speed REC :
Sets the zoom speed during movie recording when [Speed Type] is set to [Fix]. (1 (Slow) to 8 (Fast))

Hint

- When [Speed Type] is set to [Variable], pressing the zoom lever on the remote commander will increase the zoom speed (some remote commanders do not support variable zoom).
- If [Speed Type] is set to [Fix], a high speed is set for [Fixed Speed STBY], and a slow speed is set for [Fixed Speed REC], the angle of view can be changed quickly during shooting standby and slowly during movie recording.

Note

- If you increase the zoom speed, the sound of zoom operations may be recorded.

5-043-036-16(1) Copyright 2022 Sony Corporation

About zoom scale

The zoom scale that is used in combination with the zoom of the lens changes according to the selected image size.

When [Aspect Ratio] is [3:2]

JPEG Image Size/HEIF Image Size	Optical zoom only (smart zoom)	Clear Image Zoom	Digital Zoom
L: 26M	-	Approx. 2×	Approx. 4×
M: 13M	Approx. 1.4×	Approx. 2.8×	Approx. 5.7×
S: 6.4M	Approx. 2×	Approx. 4×	Approx. 8×

Related Topic

- Clear Image Zoom/Digital Zoom
- The zoom features available with this product
- Zoom Range (still image/movie)

5-043-036-16(1) Copyright 2022 Sony Corporation

Interchangeable Lens Digital Camera
ILME-FX30

Zoom Ring Rotate

Assigns zoom in (T) or zoom out (W) functions to the zoom ring rotation direction. Available only with power zoom lenses that support this function.

1. **MENU → (Setup) → [Operation Customize] → [Zoom Ring Rotate] → desired setting.**

Menu item details

Left(W)/Right(T):
Assigns zoom out (W) function to left-handed rotation and zoom-in (T) function to right-handed rotation.

Right(W)/Left(T):
Assigns zoom in (T) function to left-handed rotation and zoom-out (W) function to right-handed rotation.

5-043-036-16(1) Copyright 2022 Sony Corporation

SteadyShot (still image)

Sets whether or not to use the SteadyShot function.

1 **MENU → (Shooting) → [Image Stabilization] → [SteadyShot] → desired setting.**

Menu item details

On:
Uses [SteadyShot].

Off:
Does not use [SteadyShot].

Hint

- When using a tripod, etc., make sure to turn off the SteadyShot function because this can cause any malfunction when shooting.
- If you assign [SteadyShot Select] to a desired key using [Custom Key/Dial Set.], you can switch the [SteadyShot] function on or off by pressing the key.
- When shooting in a dark place, the (SteadyShot) icon may blink. We recommend that you set a faster shutter speed by decreasing the aperture value or adjusting the ISO sensitivity to a higher value.

Note

- If a lens equipped with a SteadyShot switch is attached, the settings can only be changed using that switch on the lens. You cannot switch the settings using the camera.

Related Topic

- SteadyShot (movie)
- SteadyShot Adjust. (still image/movie)
- Assigning frequently used functions to buttons and dials (Custom Key/Dial Set.)

5-043-036-16(1) Copyright 2022 Sony Corporation

SteadyShot (movie)

Sets [SteadyShot] effect when shooting movies.

1. **MENU → (Shooting) → [Image Stabilization] → [SteadyShot] → desired setting.**

Menu item details

Active:
Provides a more powerful SteadyShot effect.

Standard:
Reduces camera shake under stable movie shooting conditions.

Off:
Does not use [SteadyShot].

Note

- When using a tripod, etc., make sure to turn off the SteadyShot function because this can cause any malfunction when shooting.
- If you change the setting for [SteadyShot], the angle of view will change. When [SteadyShot] is set to [Active], the angle of view becomes narrower.
- In the following situations, [Active] cannot be selected:
  - For normal movies: when [Rec Frame Rate] is set to [119.88p]/[100p] or higher
    For slow-motion/quick-motion shooting: when [S&Q Frame Rate] is set to [120fps]/[100fps] or higher

Related Topic

- SteadyShot (still image)
- SteadyShot Adjust. (still image/movie)

5-043-036-16(1) Copyright 2022 Sony Corporation

SteadyShot Adjust. (still image/movie)

S&Q

You can shoot with an appropriate SteadyShot setting for the attached lens.

1. **MENU → / (Shooting) → [Image Stabilization] → [SteadyShot Adjust.] → desired setting.**

Menu item details

Auto:
Performs the SteadyShot function automatically according to the information obtained from the attached lens.

Manual:
Performs the SteadyShot function according to the focal-length set using [Focal Length]. (8mm-1000mm)

Note

- The SteadyShot function may not work optimally when the power has just been turned on, right after you point the camera towards a subject, or when the shutter button has been pressed all the way down without stopping halfway.
- When the camera cannot obtain focal length information from the lens, the SteadyShot function does not work correctly. Set [SteadyShot Adjust.] to [Manual] and set [Focal Length] to match the lens you are using. The currently set SteadyShot focal length will be displayed along with the (SteadyShot) icon.
- When using an SEL16F28 lens (sold separately) with a teleconverter, etc., set [SteadyShot Adjust.] to [Manual] and set the focal length.

Related Topic

- SteadyShot focal length (still image/movie)

5-043-036-16(1) Copyright 2022 Sony Corporation

SteadyShot focal length (still image/movie)

Sets the focal length information to be used for the built-in SteadyShot function when [SteadyShot Adjust.] is set to [Manual].

1. **MENU → / (Shooting) → [Image Stabilization] → [Focal Length] → desired setting.**

Menu item details

8mm - 1000mm:
The SteadyShot function uses the focal length that you set.
Check the focal-length index on the lens and set the focal-length.

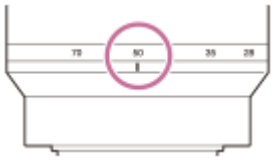

Related Topic

- SteadyShot Adjust. (still image/movie)

5-043-036-16(1) Copyright 2022 Sony Corporation

Lens Compensation (still image/movie)

S&Q

Compensates for shading in the corners of the screen or distortion of the screen, or reduces color deviation at the corners of the screen caused by certain lens characteristics.

1. **MENU → / (Shooting) → [Image Quality/Rec] → [Lens Compensation] → desired setting.**

Menu item details

Shading Comp.:
Sets whether to automatically compensate for darkness in the corners of the screen. ([Auto]/[Off])

Chromatic Aberration Comp.:
Sets whether to automatically reduce color deviation at the corners of the screen. ([Auto]/[Off])

Distortion Comp.:
Sets whether to automatically compensate for distortion of the screen. ([Auto]/[Off])

Breathing Comp. (only when shooting movies):
Sets whether to automatically compensate for the phenomenon in which the angle of view changes according to the focusing distance during movie recording. ([On]/[Off])

Note

- This function is only available when using an automatic compensation compliant lens.
- Darkness in the corners of the screen may not be corrected with [Shading Comp.], depending on the lens type.
- Depending on the attached lens, [Distortion Comp.] is fixed to [Auto], and you cannot select [Off].
- If [SteadyShot] is set to [Active] in the movie recording mode, [Distortion Comp.] will become locked to [Auto].
- When [Breathing Comp.] is set to [On], the angle of view and the image quality change slightly.
- Depending on the lens, changes in the angle of view may not be fully compensated for even when [Breathing Comp.] is set to [On].

5-043-036-16(1) Copyright 2022 Sony Corporation

High ISO NR

When shooting with high ISO sensitivity, the product reduces noise that becomes more noticeable when the product sensitivity is high.

1. **MENU → (Shooting) → [Image Quality/Rec] → [High ISO NR] → desired setting.**

Menu item details

Normal:
Activates high ISO noise reduction normally.

Low:
Activates high ISO noise reduction moderately.

Off:
Does not activate high ISO noise reduction.

Note

- [High ISO NR] is fixed to [Normal] in the following shooting modes:
  - [Intelligent Auto]
- When [File Format] is set to [RAW], this function is not available.
- [High ISO NR] does not work for RAW images when the [File Format] is [RAW & JPEG]/[RAW & HEIF].
- Since this camera is not equipped with a long-exposure noise reduction function, noise may be noticeable when taking long-exposure shots with high-sensitivity.

5-043-036-16(1) Copyright 2022 Sony Corporation

Auto Review (still image)

S&Q

You can check the recorded image on the screen right after the shooting. You can also set the display time for Auto Review.

1. **MENU → (Setup) → [Display Option] → [Auto Review] → desired setting.**

Menu item details

10 Sec/5 Sec/2 Sec:
Displays the recorded image on the screen right after shooting for the selected duration of time. If you perform a magnifying operation during Auto Review, you can check that image using the magnified scale.

Off:
Does not display the Auto Review.

Note

- When you use a function that performs image processing, the image before processing may be displayed temporarily, followed by the image after processing.
- Auto Review is displayed in the mode that you have set using DISP (Display Setting) for playback.

Related Topic

- Enlarging an image being played back (Enlarge Image)

5-043-036-16(1) Copyright 2022 Sony Corporation

Remain Shoot Display (still image)

Sets whether or not to display an indicator of the remaining number of still images that can be continuously shot at the same shooting speed.

1. **MENU → (Setup) → [Display Option] → [Remain Shoot Display] → desired setting.**

Menu item details

Always Display:
Always displays the indicator when shooting still images.

Shoot-Only Display:
While shooting still images, an indicator of the remaining number of still images is displayed. When you press the shutter button halfway down, an indicator of the remaining number of still images is displayed.

Not Displayed:
Does not display the indicator.

5-043-036-16(1) Copyright 2022 Sony Corporation

Grid Line Display (still image/movie)

S&Q

Sets whether the grid line is displayed or not during shooting. The grid line will help you to adjust the composition of images.

1. **MENU → / (Shooting) → [Shooting Display] → [Grid Line Display] → desired setting.**

Menu item details

On:
Displays the grid line.

Off:
Does not display the grid line.

Hint

- If you assign [Grid Line Display Select] to a desired key using [Custom Key/Dial Set.] or [Custom Key/Dial Set.], you can show or hide the grid lines by pressing the assigned key.

Related Topic

- Grid Line Type (still image/movie)
- Assigning frequently used functions to buttons and dials (Custom Key/Dial Set.)

5-043-036-16(1) Copyright 2022 Sony Corporation

Grid Line Type (still image/movie)

Sets the displayed type of grid line. The grid line will help you to adjust the composition of images.

1. **MENU → / (Shooting) → [Shooting Display] → [Grid Line Type] → desired setting.**

Menu item details

Rule of 3rds Grid:
Place main subjects close to one of the grid lines that divide the image into thirds for a well-balanced composition.

Square Grid:
Square grids make it easier to confirm the horizontal level of your composition. This is useful for assessing the composition when shooting landscapes, closeups, or when performing camera scanning.

Diag. + Square Grid:
Place a subject on the diagonal line to express an uplifting and powerful feeling.

Hint

- If you assign [Grid Line Type] to the desired key using [Custom Key/Dial Set.] or [Custom Key/Dial Set.], you can set the type of grid line by pressing the assigned key.

Related Topic

- Grid Line Display (still image/movie)
- Assigning frequently used functions to buttons and dials (Custom Key/Dial Set.)

5-043-036-16(1) Copyright 2022 Sony Corporation

Live View Display Set.

S&Q

Sets whether or not to show images altered with effects of the exposure compensation, white balance, [Creative Look], etc. on the screen.

1. **MENU → (Shooting) → [Shooting Display] → [Live View Display Set.] → desired setting item.**

Menu item details

Live View Display:
Sets whether to reflect all the shooting settings on the monitor and display the Live View in conditions close to what your picture will look like once the settings are applied, or to display the Live View without reflecting the settings. ([Setting Effect ON] / [Setting Effect OFF])

If you select [Setting Effect OFF], you can easily check the composition even when shooting with the image composition on the Live View display.

Frame Rate Low Limit:
Sets whether or not to keep the frame rate of the Live View from becoming too slow. ([On] / [Off])

If you select [On], the frame rate of the Live View will not become slow even when shooting in a dark place, but the Live View display may become dark.

Hint

- If you select [Setting Effect OFF], Live View is always displayed with the appropriate brightness even in [Manual Exposure] mode.
- When [Setting Effect OFF] is selected, the VIEW (VIEW) icon is displayed on the Live View screen.

Note

- [Live View Display] cannot be set to [Setting Effect OFF] in the following shooting modes:
  – [Intelligent Auto]
- If you shoot movies in the still image shooting mode, the shooting settings will be reflected in Live View even when [Live View Display] is set to [Setting Effect OFF].
- When [Live View Display] is set to [Setting Effect OFF], the brightness of the shot image will not be the same as that of the displayed Live View.

5-043-036-16(1) Copyright 2022 Sony Corporation

Aperture Preview

S&Q

While you press and hold the key to which you assigned the [Aperture Preview] function, the aperture is stepped down to the set aperture value and you can check the blurriness prior to shooting.

1. **MENU → (Setup) → [Operation Customize] → [Custom Key/Dial Set.] → set the [Aperture Preview] function to the desired key.**
2. **When shooting still images, confirm the images by pressing the key to which [Aperture Preview] is assigned.**

Hint

- Although you can change the aperture value during the preview, the subject may be defocused if you select a brighter aperture. We recommend that you adjust the focus again.

Related Topic

- Assigning frequently used functions to buttons and dials (Custom Key/Dial Set.)
- Shot. Result Preview

5-043-036-16(1) Copyright 2022 Sony Corporation

Shot. Result Preview

While pressing down the key to which [Shot. Result Preview] is assigned, you can check the image preview with the DRO, shutter speed, aperture and ISO sensitivity settings applied. Check the shooting result preview before shooting.

1. **MENU → (Setup) → [Operation Customize] → [Custom Key/Dial Set.] → set the [Shot. Result Preview] function to the desired key.**
2. **When shooting still images, confirm the images by pressing the key to which [Shot. Result Preview] is assigned.**

Hint

- The DRO settings, shutter speed, aperture and ISO sensitivity settings you have set are reflected on the image for [Shot. Result Preview], but some effects cannot be previewed depending on the shooting settings. Even in that case, the settings you have selected will be applied to the images you shoot.

Related Topic

- Assigning frequently used functions to buttons and dials (Custom Key/Dial Set.)
- Aperture Preview

5-043-036-16(1) Copyright 2022 Sony Corporation

Bright Monitoring

S&Q

Allows you to adjust the composition when shooting in dark environments. By extending the exposure time, you can check the composition on the monitor even in dark locations such as under the night sky.

1. **MENU → (Setup) → [Operation Customize] → [Custom Key/Dial Set.] → assign the [Bright Monitoring] function to the desired key.**

2. **In a still image shooting mode, press the key to which you assigned the [Bright Monitoring] function, and then shoot an image.**
   - The brightness due to [Bright Monitoring] will continue after shooting.
   - To return the monitor brightness to normal, press the key to which you assigned the [Bright Monitoring] function once again.

Note

- During [Bright Monitoring], [Live View Display] will automatically switch to [Setting Effect OFF], and setting values such as exposure compensation will not be reflected in the live view display. It is recommended that you use [Bright Monitoring] only in dark locations.
- [Bright Monitoring] will be automatically canceled in the following situations.
  - When the camera is turned off.
  - When the shooting mode is changed from P/A/S/M to a mode that is not P/A/S/M.
  - When the focus mode is set to other than manual focus.
- While the following functions are being executed, you cannot turn [Bright Monitoring] on/off by pressing the custom key to which you have assigned [Bright Monitoring].
  - [Auto Magnifier in MF]
  - [Focus Magnifier]
- When using [Bright Monitoring] in dark locations, the shutter speed may be slower than during normal shooting, and the updating speed of the monitor display may be slower. Also, because the measured brightness range is expanded, the exposure may change.

Related Topic

- Live View Display Set.

5-043-036-16(1) Copyright 2022 Sony Corporation

Emphasized REC Display

S&Q

Sets whether or not to display a red frame around the edges of the camera's monitor while recording a movie. You can easily check whether the camera is in standby or recording, even when you are looking at the camera monitor from an angle or at a distance.

1. **MENU → (Shooting) → [Shooting Display] → [Emphasized REC Display] → desired setting.**

Menu item details

On:
Displays a red frame to indicate that recording is in progress.

Off:
Does not display a frame to indicate that recording is in progress.

Hint

- The frame displayed by this function can also be output to an external monitor connected via HDMI. Set [HDMI Info. Display] to [On].

Related Topic

- HDMI Info. Display

5-043-036-16(1) Copyright 2022 Sony Corporation

Marker Display

S&Q

While shooting movies, you can set whether or not to display markers on the monitor, and select the types of marker.

1. **MENU → (Shooting) → [Marker Display] → Select a menu item and set the desired parameter.**

Menu item details

Marker Display:
Sets whether or not to display markers. ([On] / [Off])

Center Marker:
Sets whether or not to display the center marker in the middle of the shooting screen. ([Off] / [On])

Aspect Marker:
Sets the aspect marker display. ([Off] / [9:16] / [4:5] / [1:1] / [4:3] / [13:9] / [14:9] / [15:9] / [16:9]* / [17:9] / [1.66:1] / [1.85:1] / [1.91:1] / [2:1] / [2.35:1] / [2.39:1])

* When the camera's system software (firmware) is Ver.2.00 or later

Safety Zone:
Sets the safety zone display. This becomes the standard range that can be received by a general household TV. ([Off] / [80%] / [90%])

Guideframe:
Sets whether or not to display the guide frame. You can verify whether the subject is level or perpendicular to the ground. ([Off] / [On])

Hint

- You can display several markers at the same time.
- Position the subject at the cross point of [Guideframe] to ensure a balanced composition.

Note

- The markers are displayed when the shooting mode is set to [Movie] or [S&Q Motion], or when shooting movies.
- You cannot display markers when using [Focus Magnifier].
- The markers are displayed on the monitor. (You cannot output the markers.)

5-043-036-16(1) Copyright 2022 Sony Corporation

Gamma Display Assist

Movies with S-Log3 gamma are assumed to be processed after shooting in order to make use of the wide dynamic range. Images with the HLG gamma are assumed to be displayed on HDR-compatible monitors. They are therefore displayed in low contrast during shooting, and may be difficult to monitor. However, you can use the [Gamma Display Assist] function to reproduce contrast equivalent to that of normal gamma. In addition, [Gamma Display Assist] can also be applied when playing back movies on the camera's monitor.

1. **MENU → (Setup) → [Display Option] → [Gamma Display Assist] → desired setting.**

Menu item details

On:
Uses the gamma display assist function.

Off:
Does not use the gamma display assist function.

Hint

- If you assign [Gamma Disp. Assist Sel.] to a desired key using [Custom Key/Dial Set.], [Custom Key/Dial Set.], or [Custom Key Setting], you can turn the gamma display assist function on or off by pressing the assigned key.

Note

- [Gamma Display Assist] is not applied to movies when displayed on a TV or monitor connected to the camera.
- [Gamma Display Assist] is locked to [Off] in the following situations:
  - When [Log Shooting] is set to other than [Off]

Related Topic

- Picture Profile (still image/movie)
- Gamma Disp. Assist Typ.
- HLG Still Image

5-043-036-16(1) Copyright 2022 Sony Corporation

Gamma Disp. Assist Typ.

S&Q

Selects the conversion type for [Gamma Display Assist].

1 **MENU → (Setup) → [Display Option] → [Gamma Disp. Assist Typ.] → desired setting.**

Menu item details

Auto:

- Displays images with effects as follows according to the gamma or color mode set in [Picture Profile].
  - When the gamma is set to [S-Log3]: [S-Log3→709(800%)]
  - When the gamma is set to [HLG], [HLG1], [HLG2], or [HLG3], and the color mode is set to [BT.2020]: [HLG(BT.2020)]
  - When the gamma is set to [HLG], [HLG1], [HLG2], or [HLG3], and the color mode is set to [709]: [HLG(709)]
- Displays images with an [HLG(BT.2020)] effect when shooting HLG still images with [HLG Still Image] set to [On].

S-Log3→709(800%):
Displays images with an S-Log3 gamma reproducing contrast equivalent to ITU709 (800%).

HLG(BT.2020):
Displays images after adjusting the image quality of the monitor to a quality that is almost the same as when images are displayed on an [HLG(BT.2020)] compatible monitor.

HLG(709):
Displays images after adjusting the image quality of the monitor to a quality that is almost the same as when images are displayed on an [HLG(709)] compatible monitor.

Hint

- If you assign [Gamma Disp. Assist Typ.] to a desired key using [Custom Key/Dial Set.] or [Custom Key/Dial Set.], you can switch the [Gamma Disp. Assist Typ.] setting.

Note

- When [Gamma Display Assist] is set to [Auto] during playback, an effect is applied to the image as follows:
  - When playing back a movie recorded with [HLG], [HLG1], [HLG2], or [HLG3]: Displays the image with an [HLG(BT.2020)] or [HLG(709)] effect depending on the color mode.
  - When playing back an HLG still image shot with [HLG Still Image] set to [On]: Displays the image with an [HLG(BT.2020)] effect.

  In other situations, movies are displayed according to the gamma setting and color mode setting in [Picture Profile].

Related Topic

- Gamma Display Assist
- Picture Profile (still image/movie)
- HDMI Output Settings (movie)

5-043-036-16(1) Copyright 2022 Sony Corporation

De-Squeeze Display

S&Q

During movie recording and playback, movies compressed using an anamorphic lens are displayed on the monitor with correction (de-squeezing) to the CinemaScope aspect ratio (2.39:1) according to the ratio of the anamorphic lens.
This function can be used when the camera's system software (firmware) is Ver.2.00 or later.

1. **MENU → (Setup) → [Display Option] → [De-Squeeze Display] → desired setting.**
   - Select a setting according to the magnification of the anamorphic lens that you are using.

Menu item details

Off:
Does not de-squeeze the displayed image.

1.3x:
Compressed movies are displayed with 1.3-fold horizontal correction.

2.0x:
Compressed movies are displayed with 2.0-fold horizontal correction.

1.5x *:
Compressed movies are displayed with 1.5-fold horizontal correction.

1.6x *:
Compressed movies are displayed with 1.65-fold horizontal correction.

* When the camera's system software (firmware) is Ver.6.00 or later.

Hint

- When [De-Squeeze Display] is set to anything other than [Off], the following settings are locked.
  - [Focus Mode]: [Manual Focus]
  - [Focus Area]: [Wide]
  - [SteadyShot]: [Off]
  - [Face Priority in Multi Metering]: [Off]

Note

- [De-Squeeze Display] is only available in the movie recording mode and slow-motion/quick-motion shooting mode.
- Even if [De-Squeeze Display] is set to anything other than [Off], the displayed image will not be de-squeezed in the following cases.
  - Recording movies by pressing the MOVIE button in the still image shooting mode
  - Outputting images during USB streaming
  - Monitoring images when using [Remote Shooting]
  - Outputting images to a device connected via HDMI when [RAW Output] under [HDMI Output Settings] is set to [On]
  - When [Log Shooting] under [Log Shooting Setting] is set to [Off]
  - Outputting HDMI images when [Rec. Media dur HDMI Output] is set to [Off(HDMI Only)]
- Still images that were extracted using [Photo Capture] from movies shot with an anamorphic lens will not be de-squeezed.

5-043-036-16(1) Copyright 2022 Sony Corporation

Audio Recording

S&Q

Sets whether to record sounds when shooting movies. Select [Off] to avoid recording the sounds of the lens and the camera operating. This function cannot be used during slow-motion/quick-motion shooting.

1. **MENU → (Shooting) → [Audio Recording] → [Audio Recording] → desired setting.**

Menu item details

On:
Records sound.

Off:
Does not record sound.

Related Topic

- Audio Rec Level

5-043-036-16(1) Copyright 2022 Sony Corporation

Audio Rec Level

S&Q

You can adjust the audio recording level of the built-in microphone and input from the microphone terminal while checking the level meter. This function cannot be used during slow-motion/quick-motion shooting.

1. **MENU → (Shooting) → [Audio Recording] → [Audio Rec Level].**
2. **Select the desired level using the right/left sides of the control wheel.**

Menu item details

+:
Turns up the audio recording level.
-:
Turns down the audio recording level.

Hint

- When you record audio movies with loud volumes, set [Audio Rec Level] to a lower sound level. Doing so enables you to record more realistic audio. When you record audio movies with lower volumes, set [Audio Rec Level] to a greater sound level to make the sound easier to hear. Check that the volume is at the appropriate level by monitoring the audio recording volume with the connected headphones or the volume level meter on the camera.
- To reset the audio recording level to the default setting, press the (Delete) button.

Note

- Regardless of the [Audio Rec Level] settings, the limiter always operates.
- [Audio Rec Level] is available only when the shooting mode is set to movie mode.

5-043-036-16(1) Copyright 2022 Sony Corporation

Audio Out Timing

S&Q

You can set echo cancellation during audio monitoring and prevent undesirable deviations between video and audio. This function cannot be used during slow-motion/quick-motion shooting.

1. **MENU → (Shooting) → [Audio Recording] → [Audio Out Timing] → desired setting.**

Menu item details

Live:
Outputs audio without delay. Select this setting when audio deviation is a problem during audio monitoring.

Lip Sync:
Outputs audio and video in sync. Select this setting to prevent undesirable deviations between video and audio.

Note

- Using an external microphone may result in a slight delay. For details, refer to the operating instructions supplied with the microphone.
- Audio is output with the setting for [Lip Sync] during HDMI output.

5-043-036-16(1) Copyright 2022 Sony Corporation

Wind Noise Reduct.

S&Q

Sets whether or not to reduce wind noise by cutting the low-range sound of the input audio from the built-in microphone. This function cannot be used during slow-motion/quick-motion shooting.

1. **MENU → (Shooting) → [Audio Recording] → [Wind Noise Reduct.] → desired setting.**

Menu item details

Auto:
The camera automatically detects and reduces wind noise.

On:
Always reduces wind noise.

Off:
Does not reduce wind noise.

Note

- The sound quality may vary from the normal recording settings when [Wind Noise Reduct.] is set to [On].
- When an external microphone (sold separately) is used, [Wind Noise Reduct.] does not function.
- When [Wind Noise Reduct.] is set to [Auto] while [Audio Out Timing] is set to [Live], the wind noise reduction effect cannot be confirmed by audio monitoring during recording. Audio with reduced wind noise is recorded in the movie. Also, when live-streaming audio using the streaming function, audio with reduced wind noise is streamed.
- If you change the [Wind Noise Reduct.] setting while recording a movie, noise may be produced when the setting is changed and become recorded in the movie.

Related Topic

- Audio Out Timing

5-043-036-16(1) Copyright 2022 Sony Corporation

Shoe Audio Set.

S&Q

Sets the digital audio transmitted from the XLR handle unit (supplied only with the ILME-FX30) or a microphone (sold separately) that supports the digital audio interface, etc. attached to the multi-interface shoe of the camera. You can set the sampling frequency, the number of quantization bits, and the number of channels. This function cannot be used during slow-motion/quick-motion shooting.

1. **MENU → (Shooting) → [Audio Recording] → [Shoe Audio Set.] → desired setting.**

Menu item details

48khz/24bit 4ch :
Sets the sampling frequency of audio input to 48 kHz, the number of quantization bits to 24 bits, and the number of channels to 4.

48khz/24bit 2ch :
Sets the sampling frequency of audio input to 48 kHz, the number of quantization bits to 24 bits, and the number of channels to 2.

48khz/16bit 2ch :
Sets the sampling frequency of audio input to 48 kHz, the number of quantization bits to 16 bits, and the number of channels to 2.

Hint

- The audio level display on the monitor is for 4 channels during 4-channel audio recording.

Note

- When an external microphone (sold separately) is connected to the (microphone) terminal of the camera, the audio is recorded from the external microphone attached to the (microphone) terminal. You cannot set [Shoe Audio Set.].
- If the attached microphone is set to analog transmission, you cannot set [Shoe Audio Set.].
- When the attached microphone does not support 4-channel audio recording, you cannot select [48khz/24bit 4ch] (48khz/24bit 4ch).
- When the attached microphone does not support 24-bit audio recording, [Shoe Audio Set.] becomes locked to [48khz/16bit 2ch] (48khz/16bit 2ch).
- Audio cannot be recorded correctly in the following situations during movie recording:
  - When you attach or remove the microphone
  - When digital transmission is switched to analog transmission or vice versa on the microphone side

Related Topic

- 4ch Audio Monitoring (movie)

5-043-036-16(1) Copyright 2022 Sony Corporation

Recording audio using the XLR adaptor of the supplied handle (only with the ILME-FX30)

The handle (supplied) is equipped with an XLR adaptor. By attaching the handle, you can connect multiple external audio devices to record sound.
The camera is compatible with the digital audio interface of the Multi Interface Shoe. This allows the camera and the XLR adaptor to communicate with each other through digital signals and provide audio recording with minimum noise interference.

Switching the audio input to the handle

By switching the audio input from the built-in microphone of the camera to the handle, you can record with the microphone connected to the handle.

1. Set the HANDLE AUDIO switch to ON.
   - The built-in microphone of the camera is activated when the HANDLE AUDIO switch is set to OFF.

Connecting an external audio device

You can use a microphone (sold separately) or an external audio device, such as an audio mixer, for recording.

1. Connect your desired device to the INPUT1, INPUT2, or INPUT3 jack.
   - When using either the INPUT1 or INPUT2 jack, connect the device to the INPUT1 jack.
   - When connecting the device to the INPUT3 jack, proceed to Step 3.
2. Select an audio source to input.
   - Depending on the device connected to the INPUT1 or INPUT2 jack, set the INPUT1 (LINE/MIC/MIC+48V) or INPUT2 (LINE/MIC/MIC+48V) switch as follows:
     - LINE (standard input level of +4 dBu (0 dBu = 0.775 Vrms)): for an external audio device (e.g. an audio mixer)
     - MIC: for a dynamic microphone or a microphone with the built-in battery
     - MIC+48V: for a microphone compatible with +48V power (phantom power)
3. With the INPUT SELECT switch, select the audio input for recording audio to the channels on the camera.
   - Select the audio input jack on the XLR adaptor (INPUT1, INPUT2, or INPUT3) through which audio is recorded to the channels on the camera.
4. When the device is connected to the INPUT1 or INPUT2 jack, set the standard input level of the microphone.
   - When the INPUT1 (LINE/MIC/MIC+48V) or INPUT2 (LINE/MIC/MIC+48V) switch is set to either “MIC” or “MIC+48V,” you can set the standard input level with the ATT (INPUT1) or ATT (INPUT2) switch. Select the level suitable for the sensitivity of the connected microphone or for the volume level of the input audio.
     - 0dB: Standard input level of -60 dBu
       This is suitable for recording with a low-sensitivity microphone while amplifying sounds.
     - 10dB: Standard input level of -50 dBu
       This is the recommended input level for an ordinary microphone.
     - 20dB: Standard input level of -40 dBu
       This is suitable for recording with a high-sensitivity microphone while keeping the sound volume low.
5. Adjust the recording volume level.

Minimizing noise with the low-cut function

Minimize unwanted noises, such as wind noise, air-conditioning noise, and vibration noise, by attenuating low-frequency components of the audio input from the INPUT1 or INPUT2 jack.

1. Change the LOW CUT (INPUT1) or LOW CUT (INPUT2) switch setting.
   - Select either “300Hz” or “100Hz” depending on the noise to minimize.

Adjusting the recording volume level

You can adjust the recording volume level of the audio input from the INPUT1, INPUT2, or INPUT3 jack.

1. Set the AUTO/MAN(/LINK) switch for the audio input jack (INPUT1/INPUT2/INPUT3) to “MAN.”
2. Rotate the AUDIO LEVEL dial to adjust the volume to the appropriate level.
   - Make sure that the volume is at the appropriate level by monitoring the audio recording volume with the connected headphones or the volume level meter on the camera.

Hint

- To automatically adjust the recording volume level, set the AUTO/MAN(/LINK) switch to “AUTO.” If the input audio is loud, the recording volume level will be lowered automatically to avoid audio distortion.
- To automatically synchronize the adjustment of the recording volume level of the audio input from the INPUT2 jack to the INPUT1 jack, set the AUTO/MAN/LINK (INPUT2) switch to “LINK.” This synchronization comes in handy for receiving audio through the INPUT1 and INPUT2 jacks and recording the audio in stereo. Setting the AUTO/MAN (INPUT1) switch to “MAN” and the AUTO/MAN/LINK (INPUT2) switch to “LINK” disables the AUDIO LEVEL dial for the INPUT2 jack. This allows you to adjust the recording volume levels of the audio input from both the INPUT1 and INPUT2 jacks simultaneously with the AUDIO LEVEL dial for the INPUT1 jack.

Selecting the audio input for recording audio to the channels on the camera

With the INPUT SELECT switch, select the audio input jack on the XLR adaptor (INPUT1, INPUT2, or INPUT3) through which audio is recorded to the channels on the camera.

When only the INPUT1 jack has an external device connected:
Set the switch to “IN1.” Audio input from the INPUT1 jack will be recorded to both the CH1 and CH2 channels on the camera.

Audio input jack	Recording channel
INPUT1	CH1 and CH2

When both the INPUT1 and INPUT2 jacks have an external device connected:
Set the switch to “IN1·IN2.” Audio input from the INPUT1 jack will be recorded to the CH1 channel on the camera, while audio input from the INPUT2 jack will be recorded to the CH2 channel.

Audio input jack	Recording channel
INPUT1	CH1
INPUT2	CH2

Hint

- When using a stereo microphone with two XLR (3-pin, female-type) plugs, connect the left-channel plug to the INPUT1 jack and the right-channel plug to the INPUT2 jack, and then set the INPUT SELECT switch to “IN1·IN2.”
  In addition, setting the AUTO/MAN/LINK (INPUT2) switch to “LINK” comes in handy during stereo recording, as you can simultaneously adjust the recording volume levels of the audio input from both the INPUT1 and INPUT2 jacks.

When the INPUT3 jack has an external device connected:
Set the switch to “IN3.” Stereo audio will be received through the INPUT3 jack, and left-channel audio will be recorded to the CH1 channel on the camera, while right-channel audio will be recorded to the CH2 channel.

Audio input jack	Recording channel
INPUT3 (L)	CH1
INPUT3 (R)	CH2

When the INPUT1, INPUT2, and INPUT3 jacks all have an external device connected for simultaneous recording to 4 channels
To record audio input from the INPUT1 jack to the CH1 channel, audio input from the INPUT2 jack to the CH2 channel, and audio input from the INPUT3 jack to the CH3 and CH4 channels on the camera, set the switch to “IN1·IN2.”

Audio input jack	Recording channel
INPUT1	CH1
INPUT2	CH2
INPUT3 (L)	CH3
INPUT3 (R)	CH4

To record audio input from the INPUT3 jack to the CH1 and CH2 channels, audio input from the INPUT1 jack to the CH3 channel, and audio input from the INPUT2 jack to the CH4 channel on the camera, set the switch to “IN3.”

Audio input jack	Recording channel
INPUT1	CH3
INPUT2	CH4
INPUT3 (L)	CH1
INPUT3 (R)	CH2

Note

- If dust or water droplets are present on the surface of the microphone, successful recording may not be possible. Be sure to clean the microphone surface before using the handle.
- While recording is in progress, operating and handling noises from the camera or lens may be recorded. Touching the handle while recording is in progress will cause noise to the recording.
- If the microphone on the handle is in proximity to a speaker, acoustic feedback may occur. In this case, move the handle away from the speaker to allow the maximum distance between the microphone and the speaker, or lower the speaker volume.
- When a micro USB cable is connected to the handle, using the XLR adaptor may affect its performance.

- Use of the XLR adaptor in the vicinity of a radio tower may cause static noise in recordings. Before camera shooting, make sure that there is no radio tower nearby.
- Even when the HANDLE AUDIO switch is set to ON, audio from the XLR adaptor cannot be recorded while an external microphone is connected to the camera.
- You cannot adjust the recording volume level for external audio devices connected to the XLR adaptor.
- While recording is in progress, do not change the INPUT1 or INPUT2 switch settings.
- Before connecting/disconnecting an external microphone or device to/from the INPUT1 or INPUT2 jack, be sure to set the INPUT1 (LINE/MIC/MIC+48V) or INPUT2 (LINE/MIC/MIC+48V) switch to a position other than “MIC+48V.” Plugging/unplugging the cable into/from the external microphone or device while the switch is set to “MIC+48V” may cause loud noise or a malfunction of the device.
- Before attaching/removing a microphone (sold separately) to/from the adaptor, be sure to set the INPUT1 (LINE/MIC/MIC+48V) switch to a position other than “MIC+48V.” While the switch is set to “MIC+48V,” plugging/unplugging the cable into/from the microphone may cause a loud noise or a malfunction of the microphone.
- If there is noticeable noise coming from the jacks with no device connected to them, set the INPUT1 (LINE/MIC/MIC+48V) or INPUT2 (LINE/MIC/MIC+48V) switch to “LINE.”
- When the INPUT1 (LINE/MIC/MIC+48V) or INPUT2 (LINE/MIC/MIC+48V) switch is set to “LINE,” the standard input level is locked to +4 dBu. The standard input level will not change according to the ATT switch setting.

Related Topic

- XLR handle unit (ILME-FX30 only)
- Attaching the supplied XLR handle unit (only with ILME-FX30)

5-043-036-16(1) Copyright 2022 Sony Corporation

TC/UB

S&Q

The time code (TC) and the user bit (UB) information can be recorded as data attached to movies.

1. **MENU → (Shooting) → [TC/UB] → Select a menu item and set the desired parameter.**

Menu item details

Time Code Preset:
Sets the time code.

User Bit Preset:
Sets the user bit.

Time Code Format:
Sets the recording method for the time code. (Only when [NTSC/PAL Selector] is set to NTSC.)

Time Code Run:
Sets the count up format for the time code.

Time Code Make:
Sets the recording format for the time code on the recording medium.

User Bit Time Rec:
Sets whether or not to record the time as a user bit.

How to set the time code (Time Code Preset)

1. MENU → (Shooting) → [TC/UB] → [Time Code Preset].
2. Turn the control wheel and select the first two digits.
   - The time code can be set between the following range.
     When [59.94p] is selected: 00:00:00.00 to 23:59:59.29
     * When the setting is [23.98p], the last two digits can be set from 00 to 23 in increments of four frames. When the setting is [24.00p], the last two digits can be set from 00 to 23 in increments of one frame.
     When [50p] is selected: 00:00:00.00 to 23:59:59.24
3. Set the other digits following the same procedure as in step 2, then press in the center of the control wheel.

How to reset the time code

1. MENU → (Shooting) → [TC/UB] → [Time Code Preset].
2. Press the (Delete) button to reset the time code (00:00:00.00).

How to set the user bit (User Bit Preset)

1. MENU → (Shooting) → [TC/UB] → [User Bit Preset].
2. Turn the control wheel and select the first two digits.
3. Set the other digits following the same procedure as in step 2, then press in the center of the control wheel.

How to reset the user bit

1. MENU → (Shooting) → [TC/UB] → [User Bit Preset].
2. Press the (Delete) button to reset the user bit (00 00 00 00).

How to select the recording method for the time code (Time Code Format *1)

1. MENU → (Shooting) → [TC/UB] → [Time Code Format].

DF:

Records the time code in Drop Frame*2 format.

NDF:

Records the time code in Non-Drop Frame format.

*1 Only when [NTSC/PAL Selector] is set to NTSC.

*2 The time code is based on 30 frames per second. However, a gap between the actual time and the time code will occur during extended periods of recording as the frame frequency of the NTSC image signal is approximately 29.97 frames per second. Drop frame corrects this gap to make the time code and actual time equal. In drop frame, the first 2 frame numbers are removed every minute except for every tenth minute. The time code without this correction is called non-drop frame.

- The setting is fixed to [-] when recording in 23.98p/24.00p.

How to select the count up format for the time code (Time Code Run)

1. MENU → (Shooting) → [TC/UB] → [Time Code Run].

Rec Run:

Sets the stepping mode for the time code to advance only while recording. The time code is recorded sequentially from the last time code of the previous recording.

Free Run:

Sets the stepping mode for the time code to advance anytime, regardless of the camera operation.

- The time code may not be recorded sequentially in the following situations even when the time code advances in [Rec Run] mode.
  - When the recording format is changed.
  - When the recording medium is removed.

How to select how the time code is recorded (Time Code Make)

1. MENU → (Shooting) → [TC/UB] → [Time Code Make].

Preset:

Records the newly set time code on the recording medium.

Regenerate:

Reads the last time code for the previous recording from the recording medium and records the new time code consecutively from the last time code. The time code advances in the [Rec Run] mode regardless of the [Time Code Run] setting.

The time code is read from the memory card in the slot designated by [Recording Media] under [Rec. Media Settings]. When [Recording Media] is set to [Simult. Recording], the time code is read from the memory card in Slot 1.

How to match the time code with other devices

Connect to another device such as a camcorder using an adapter cable (sold separately), and then set [Time Code Make] to [Preset] and [Time Code Run] to [Free Run]. For details, refer to “Matching the time code with other devices.”

Note

- Updating the camera’s system software will reset the time code. Set the time code again.

Related Topic

- TC/UB Disp. Setting
- Matching the time code with other devices

5-043-036-16(1) Copyright 2022 Sony Corporation

TC/UB Disp. Setting

Sets the movie duration, time code (TC), and user bit (UB) display.

1. **MENU → (Setup) → [Display Option] → [TC/UB Disp. Setting] → desired setting.**

Menu item details

Duration:
Displays the duration of the movie.

TC:
Displays the time code.

U-Bit:
Displays the user bit.

Related Topic

- TC/UB

5-043-036-16(1) Copyright 2022 Sony Corporation

Interchangeable Lens Digital Camera
ILME-FX30

Matching the time code with other devices

You can match the time code with devices equipped with a time code output terminal, such as camcorders, by connecting the camera and the device. A dedicated adapter cable (sold separately) is required to connect the Multi/Micro USB terminal of the camera to the BNC output terminal of a commercially available BNC cable.

About the dedicated adapter cable (sold separately)

You can convert the BNC terminal to a Multi Terminal with an adapter cable (sold separately). The availability of the adapter cable may vary depending on the country or region. Refer to the following support site for inventory confirmation and purchase. When purchasing, please let us know the product name and product number.

Sony service facility for professional products

https://www.sony.net/SonyInfo/Support/

- Product name: Adapter cable VMC-BNCM1 (sold separately)
- Product number: A-5051-506-A
- Length: 0.2 m (0.6 ft)

Preparation in advance

Set the time code output device (camcorder, etc.) to the mode in which the time code always advances (Free Run or Clock).

To match the time code

1. Press the MODE (mode) button on the camera. Then, select [Movie] to set the camera to the movie shooting mode.
2. MENU → (Shooting) → [TC/UB] → Set [Time Code Make] to [Preset] and [Time Code Run] to [Free Run].
3. Connect the BNC output terminal of the BNC cable **(A)** to the Multi/Micro USB terminal of the camera with the adapter cable **(B)**.

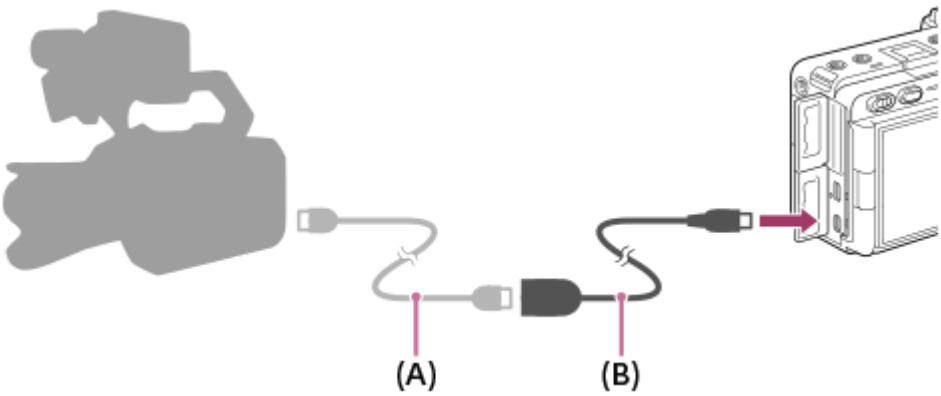

- The time code of the camera will synchronize with the time code of the connected device (external lock state), and “EXT-LK” will appear on the screen.
- Once the external lock state has been set for approximately 10 seconds, it will be maintained even after the device on the time code output side is disconnected.

Hint

- The external lock state of the time code is released when you perform the following operations on the camera.
  - When you change the setting for [Time Code Make] or [Time Code Run]
  - When you change the time code with [Time Code Preset]
  - When you change the shooting mode to the slow-motion/quick-motion mode

Note

- The adapter cable VMC-BNCM1 (sold separately) can only be used with this camera body. Do not connect it to the Multi Terminal of other devices.
- You cannot use the adapter cable by connecting it to the Micro USB terminal of the XLR handle unit (supplied only with the ILME-FX30).
- When connecting the adapter cable to the camera, be careful not to apply excessive force to the Multi Terminal of the adapter cable.
- When you set the camera to the external lock status, the time code is instantly locked to the external time code, and the same value as the external time code appears on the time data display. However, do not start recording for a few seconds until the time code generator stabilizes.
- If the frequency of the reference time code and the frame frequency of the camera are not the same, the time code cannot be locked correctly and the camera will not operate normally. In this case, the time code also cannot be properly locked to the external time code.
- When you match the time code of the camera with that of another device, movies may be off by one frame. If you use the camera for a long time, the deviation from the reference time code may increase.

Related Topic

- TC/UB

5-043-036-16(1) Copyright 2022 Sony Corporation

Interchangeable Lens Digital Camera
ILME-FX30

Outputting RAW movies to an external RAW recorder

When shooting movies, RAW movies can be output to an external recorder connected to this camera via HDMI. Use a Premium High Speed HDMI cable (sold separately) to output RAW movies
The image size output for RAW movies is 4672 x 2628 pixels.

1. **Use a Premium High Speed HDMI cable (sold separately) to connect the HDMI Type A terminal on the camera to the HDMI input terminal on the external RAW recorder.**

2. **Press the MODE (Mode) button on the camera, select [Movie] with the control wheel, and then press the center.**

3. **On the camera, select MENU → (Setup) → [External Output] → [HDMI Output Settings] → [RAW Output] → [On].**

4. **On the camera, select MENU → (Setup) → [External Output] → [HDMI Output Settings] → [RAW Output Setting] → the desired frame rate. ([59.94p] / [50p] / [29.97p] / [25p] / [23.98p] / [24.00p])**

   Set the following items as necessary.
   - Rec. Media dur HDMI Output
   - Time Code Output
   - REC Control
   - 4ch Audio Output

   For detail, Refer to “ HDMI Output Settings (movie).”

5. **Press the REC (Recording) button on the camera to start recording.**

Hint

- For information on how to operate the external RAW recorder, refer to the recorder’s instruction manual.
- When outputting RAW movies to another device connected via HDMI, set [Log Shooting] under [Log Shooting Setting] to a setting other than [Off]. The setting for [Color Gamut] under [Log Shooting Setting] is applied to RAW movies output via HDMI.

Note

- If you perform recording operations using an external recorder instead of using the REC (Recording) button on the camera, recording may not be performed correctly.

Related Topic

- HDMI Output Settings (movie)

5-043-036-16(1) Copyright 2022 Sony Corporation

Framing shooting using remote shooting (Framing Settings)

S&Q

By using the smartphone application Monitor & Control, you can switch between the full-frame image being captured and a cropped image (an image with a portion of the screen cut out) and record or stream either one. This allows for dynamic camerawork even when the camera itself is fixed in place.
For more information about Monitor & Control, refer to the following website.
https://www.sony.net/ccmc/

This function can be used when the camera's system software (firmware) is Ver.6.00 or later.

1. **Connect the camera to the smartphone on which Monitor & Control has been installed.**
2. **MENU → (Shooting) → [Shooting Option] → [Framing Settings] → [Framing] → [On].**
3. **MENU → (Shooting) → [Shooting Option] → [Framing Settings] → Select an item to set, and then select the desired setting.**
   - Each item in [Framing Settings] can also be set from Monitor & Control.
4. **Start framing shooting from Monitor & Control.**

Menu item details

Framing:
Sets whether to use framing shooting. ([On] / [Off])
Recording/Streaming:
Sets whether images recorded on a memory card or output via streaming are cropped images or full-frame images. ([Crop] / [Full])
HDMI:
Sets whether images output via HDMI are cropped images or full-frame images. ([Crop] / [Full])

Hint

- To return from the framing mode to full-screen shooting using the camera's controls during recording or streaming, first assign [Framing Stop (Full)] to a custom key using [Custom Key/Dial Set.], and then press the assigned key.
- By assigning [Switch Framing] to a custom key using [Custom Key/Dial Set.], you can press the assigned key to switch between [On] and [Off] for framing shooting.
- The framing function enables camera-work by cropping the 4K-resolution image. When using the framing function, it is recommended that you set [File Format] to HD image quality in order to prevent deterioration of the image quality.
- When using the manual shutter speed setting for framing shooting, it is recommended that you set a faster shutter speed to reduce blurring of the subject.

Note

- Framing shooting is available only in the movie recording mode.

- Even when [Framing] is set to [On], the monitor always displays image in the full angle of view, and a frame indicating the cropping area is displayed during framing shooting.
- Depending on the settings for [File Format] and [Movie Settings], the angle of view may change when [Framing] is set to [On].

Related Topic

- Monitor & Control

5-043-036-16(1) Copyright 2022 Sony Corporation

Network Streaming (movie)

You can connect the camera to a network, via either a wired or wireless connection, and livestream video and audio from the camera.
This function can be used when the camera's system software (firmware) is Ver.5.00 or later.

1. **Connect the camera and smartphone via Bluetooth.**

2. **Register information such as the connection destination server and stream key for the distribution service to be used in Creators' App.**

3. **On the camera, select MENU → (Network) → [Streaming] → [Network Streaming] → Set [Streaming] to [On].**

   [Streaming:Standby] will appear on the camera screen. Then, the camera will switch to the streaming standby state.

   - You can also select image quality settings, etc. from Creators' App

4. **Press the center of the control wheel to start streaming.**

   [Streaming:Output] will appear on the camera screen.

   - You can also start streaming from Creators' App.
   - Press the center again to exit streaming.

Menu item details

Streaming:
Sets whether to perform network streaming. ([On]/[Off])

Stream Connect Error Display:
Displays error information when the camera is unable to connect to the network or distribution server for network streaming.

Output Img. Quality Set:
Sets the image quality of video output for network streaming. ([Quality]/[Resolution]/[Frame Rate]/[Bit Rate])

Output Information Display:
Displays information for network streaming.

Movie Rec During Streaming:
Sets whether to enable recording to recording media during network streaming. ([Enable]/[Disable])

Emphasized Output Display:
Sets whether to display a blue frame around the entire monitor during network streaming. ([On]/[Off])

Root Certificate Error:
Normally it is recommended to set [Does Not Connect]. If a certificate error is displayed, update the root certificate and connect with the correct authentication.

Output image quality settings

To configure detailed settings for streaming image quality, set [Quality] to [Custom], and set [Resolution], [Frame Rate], and [Bit Rate], respectively.
The setting range of [Bit Rate] varies depending on the combination of [Resolution] and [Frame Rate].

Resolution	Frame Rate	Bit rate setting range	Bit rate default setting
4K (2160p)	59.94p/50p	38Mbps	38Mbps
	29.97p/25p	38Mbps - 13Mbps	34Mbps
2K (1440p)	59.94p/50p	38Mbps - 9Mbps	18Mbps
	29.97p/25p	38Mbps - 6Mbps	13Mbps
HD (1080p)	59.94p/50p	27Mbps - 4.5Mbps	9Mbps
	29.97p/25p	18Mbps - 3Mbps	6Mbps
HD (720p)	59.94p/50p	13.5Mbps - 2.3Mbps	6Mbps
	29.97p/25p	9Mbps - 1.5Mbps	4Mbps

Hint

- If you assign the zoom, network streaming, etc. to the dial or control wheel or register them to the function menu, you can adjust these values even during network streaming.
- The format of the streaming data is as follows.
  - Video format: MPEG-H HEVC/H.265 or MPEG-4 AVC/H.264*
  - Audio format: 48 kHz, 16 bit, 2ch

  * While streaming using RTMP/RTMPS, the video format is MPEG-4 AVC/H.264.
- When using an external microphone, you can minimize deviations between your voice and the movements of your mouth by connecting the microphone to the (microphone) terminal of the camera.

Note

- While network streaming is in progress, the camera is always set to the movie recording mode regardless of the shooting mode before the start of streaming.
- You cannot do the following during network streaming.
  - Transition to the menu screen
  - Transition to the playback screen
  - FTP transfer
  - Remote shooting
  - Cloud Connection
  - Smartphone transfer
- The following functions are disabled while network streaming is running.
  - Power Save Start Time
- When recording to recording media during network streaming, the following restrictions apply to the movie file format and recording frame rate.
  - If [Resolution] is set to [4K (2160p)] or [2K (1440p)] and [Frame Rate] is set to [59.94p]/[50p], [File Format] cannot be set to 4K.
  - [Rec Frame Rate] is the same as [Frame Rate] for the movie when outputting.
- You cannot change the [Movie Rec During Streaming] setting during network streaming.
- Depending on the temperature environment, output image quality setting for streaming, setting for movie recording during streaming, Wi-Fi connection environment, and usage conditions before the start of streaming, the internal temperature of the camera may rise, and the time available for streaming may become shorter.

- Depending on your network environment, the distributed video/audio may be disrupted. In that case, switch to a faster and more stable network or lower the setting for [Bit Rate].
- Depending on your internet connection or network conditions, streaming may be interrupted. In this case, restart streaming.
- To ensure secure streaming, the streaming URL must contain “rtmps://”.
  RTMP is used for general streaming but does not provide sufficient security, whereas RTMPS uses SSL/TLS to encrypt data and provide secure streaming.
- In SRT, you can select AES-128 or AES-256 as the encryption setting. This will encrypt streaming data and ensure secure delivery. It is possible to set [Security] to [None] in the wireless LAN settings, but in this case, data will not be encrypted, and communications will not be secure. When selecting this setting, take into consideration the security requirements of the network environment and the delivery destination.
- The encryption settings of the SRT must match those of the destination. Setting the same encryption method as that used by the destination ensures proper communication.
- When using SRT, the passphrase and shared key are set in Creators’ App. The types of characters that can be entered at this time are letters of the alphabet, numbers, and symbols. It is strongly recommended that the length be at least 16 characters.

About the RTMPS function

The RTMPS function supports a variety of encryption algorithms for secure RTMPS streaming. To ensure compatibility with a wide range of destination servers, several encryption algorithms are supported, including some that may not comply with current security best practices. For details, refer to the following website.
https://helpguide.sony.net/di/sftp/v1/h_zz/index.html

5-043-036-16(1) Copyright 2022 Sony Corporation

USB Streaming (movie)

You can connect a computer, etc. to the camera and use the camera video and audio for livestreaming or web-conferencing services. Select MENU → (Setup) → [USB] → [USB Connection Mode] → [Sel. When Connect] or [USB Streaming] beforehand.

1. **MENU → (Network) → [Streaming] → [USB Streaming] → Set [Output Res/Frame Rate] and [Movie Rec During Streaming].**

2. **Connect the camera to a computer or other device with a USB cable.**

   [Streaming:Standby] will appear on the camera screen, and the camera will switch to the streaming standby state.

   - If [USB Connection Mode] is set to [Sel. When Connect], select [Live Stream(USB Streaming)] on the selection screen for the USB connection mode.
   - Use a cable or adapter that matches the terminal on the device to be connected.

3. **Start streaming from your livestreaming/web-conferencing service.**

   [Streaming:Output] will appear on the camera screen.

   - To exit USB Streaming, turn off the power of the camera or disconnect the USB cable.

Menu item details

Output Res/Frame Rate:
Sets the resolution and the frame rate of the video. ([4K(2160p)14.99p]/[4K(2160p)12.5p]/[HD(1080p)59.94p]/[HD(1080p) 50p]/[HD(1080p)29.97p]/[HD(1080p) 25p]/[HD(720p)29.97p]/[HD(720p) 25p])

Movie Rec During Streaming:
Sets whether or not to enable recording of the video to the recording media during streaming. ([Enable]/[Disable])

Hint

- If you assign the shutter speed, ISO sensitivity, etc. to the dial or control wheel or register them to the function menu, you can adjust these values even during USB streaming.
- The format of the streaming data is as follows.
  - Video format: MJPEG* or YUV420
    * When the resolution is set to HD (720p), only MJPEG is available.
  - Audio format: PCM, 48 kHz, 16 bit, 2 ch
- During USB streaming, power is supplied to the camera from the computer. If you want to consume as little computer power as possible, set [USB Power Supply] to [Off].
- When using an external microphone, you can minimize deviations between your voice and the movements of your mouth by connecting the microphone to the (microphone) terminal of the camera.

Note

- While USB streaming is in progress, the camera is always set to the movie recording mode regardless of the shooting mode before the start of streaming.
- You cannot do the following while USB Streaming is running.
  - Transition to the playback screen
  - Network functions (Remote Shooting, FTP transfer, remote operation from a smartphone, Bluetooth function, etc.)
- The following functions are disabled while USB Streaming is running.
  - Picture Profile
  - Power Save Start Time
- When you connect the camera to a device using the USB 2.0 standard, the resolution and frame rate of the streaming video become set to HD(720p)29.97p/HD (720p) 25p.
- If you change the settings for [File Format] or [Output Res/Frame Rate]/[Movie Rec During Streaming] under [USB Streaming] during USB streaming, the streaming screen may become paused. You may also need to resume streaming from an application depending on the livestreaming service.
- Depending on the temperature environment, output image quality setting for streaming, setting for movie recording during streaming, Wi-Fi connection environment, and usage conditions before the start of streaming, the internal temperature of the camera may rise, and the time available for streaming may become shorter.

Related Topic

- USB Connection Mode

5-043-036-16(1) Copyright 2022 Sony Corporation

Interchangeable Lens Digital Camera
ILME-FX30

Contents of this chapter

The following table of contents lists the features described in this chapter (“Customizing the camera”). From each item name, you can jump to the page describing the respective functions.

Customization features of the camera

Assigning frequently used functions to buttons and dials (Custom Key/Dial Set.)

Changing the function of the dial temporarily (My Dial Settings)

Registering and recalling camera settings

- Camera Set. Memory
- Recall Camera Setting
- Memory/Recall Media
- Registering shooting settings to a custom key (Reg. Custom Shoot Set)

Registering frequently used functions to the function menu

- Fn Menu Settings

Registering frequently used functions to My Menu

- Add Item
- Sort Item
- Delete Item
- Delete Page
- Delete All
- Display From My Menu

Separately adjusting the camera settings for still images and movies

- Different Set for Still/Mv

Customizing the functions of the ring/dial

- Av/Tv Rotate
- Lock Operation Parts

Recording movies by pressing the shutter button

- REC w/ Shutter (movie)

Monitor settings

- Monitor Flip Direction
- DISP (Screen Disp) Set
- Home (Lower Left)

5-043-036-16(1) Copyright 2022 Sony Corporation

Interchangeable Lens Digital Camera
ILME-FX30

Customization features of the camera

The camera has various customization features such as registration of functions and shooting settings to custom keys. You can combine your preferred settings to customize the camera for easier operation.
For details on how to configure the settings and use them, refer to the page for each function.

To assign frequently used functions to buttons (Custom Key/Dial Set., Custom Key/Dial Set., and Custom Key Setting)

You can change the functions of the buttons including the Custom Buttons (1 to 6) according to your preferences. It is recommended that you assign frequently used functions to easily operable buttons so that you can call up the assigned functions simply by pressing the corresponding button.

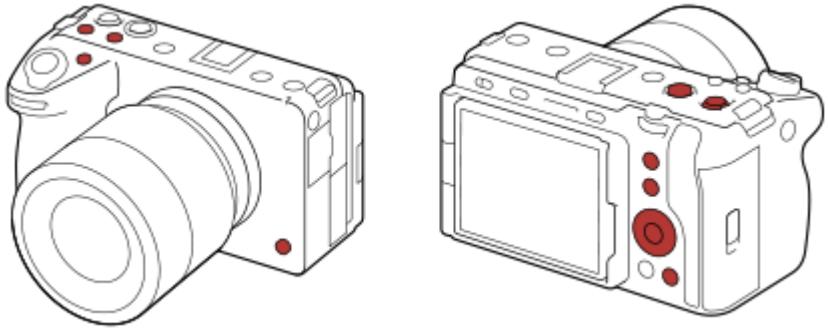

To register frequently used functions to the Fn button (Function menu)

If you register functions frequently used in the shooting mode to the Function menu, you can display the registered functions on the screen simply by pressing the Fn (Function) button. On the Function menu screen, you can recall the function you want to use by selecting the icons.

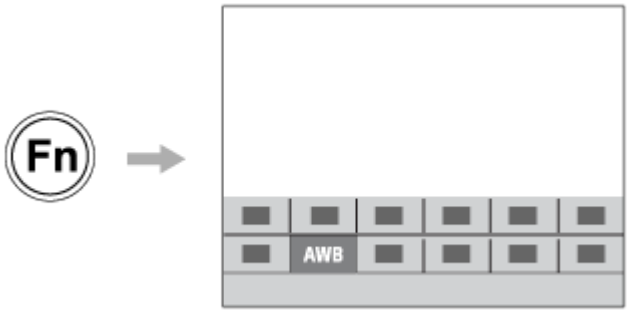

To combine frequently used functions on the menu screen (My Menu)

If you combine the frequently used items from menus such as the shooting and network menu on the “My Menu” screen, you can quickly access the desired menu items.

To assign different functions to the dial and switch the function of the dial (My Dial Settings)

You can assign the desired functions to the front/rear dial and the control wheel, and register up to three combinations of settings to the camera as “My Dial 1 - 3” settings.

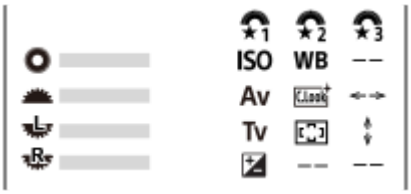

Example: [My Dial Settings] screen for models with a front dial, rear dial L, and rear dial R

To change the shooting settings quickly according to the scene (MR Camera Set. Memory)

You can register the appropriate shooting settings* for scene to the camera or a memory card, and call up the settings easily by using the MODE (Mode) button.

* You cannot register custom key settings.

To save the customized camera settings to a memory card (Save/Load Settings)

You can save camera settings* to a memory card using [Save/Load Settings]. This function is useful when you want to back up the settings, or to import the settings to another camera of the same model, etc.

* Some settings cannot be saved on a memory card.

Related Topic

- Assigning frequently used functions to buttons and dials (Custom Key/Dial Set.)
- Using the function menu
- Add Item
- Changing the function of the dial temporarily (My Dial Settings)
- Camera Set. Memory
- Save/Load Settings

5-043-036-16(1) Copyright 2022 Sony Corporation

Interchangeable Lens Digital Camera
ILME-FX30

Assigning frequently used functions to buttons and dials (Custom Key/Dial Set.)

You can use the custom key function to assign the functions you use most frequently to easily operable buttons and dials. This lets you skip the process of selecting items from MENU, so you can recall the functions more quickly.

You can separately assign functions to custom keys for the still image shooting mode, movie shooting mode, and playback mode.

- Assignable functions vary depending on the buttons or dials.

You can assign functions to the following buttons and dials.

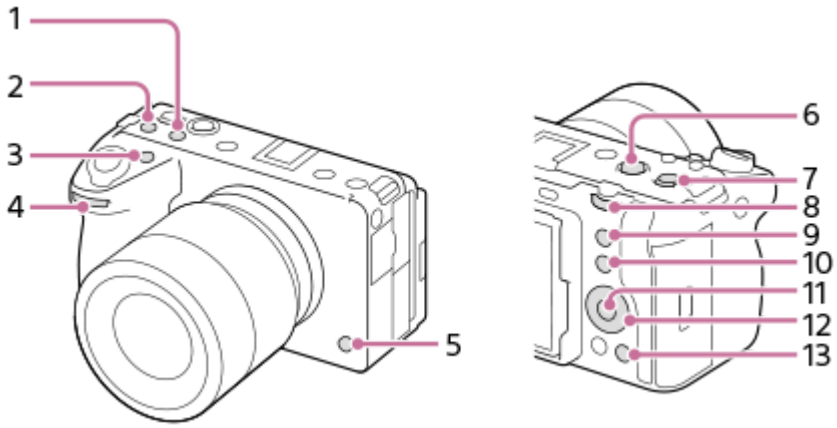

1. Custom Button 2
2. Custom Button 3
3. Custom Button 1
4. Front dial
5. Custom Button 6
6. MOVIE Button
7. Multi-Slc Center Btn
8. Rear dial
9. Custom Button 5
10. Fn Button
11. Center Button
12. Control Wheel/Left Button/Right Button/Down Button
13. Custom Button 4

The following is the procedure for assigning the [Eye AF] function to the 5 button (Custom button 5).

1. **MENU → (Setup) → [Operation Customize] → [Custom Key/Dial Set.].**
   - If you want to assign a function to recall while shooting movies, select [Custom Key/Dial Set.]. If you want to assign a function to recall while playing back images, select [Custom Key Setting].
   - You can also select [Custom Key/Dial Set.] and [Custom Key/Dial Set.] from MENU → (Setup) → [Dial Customize].

2. **Move to the [Rear] screen using the top/bottom side of the control wheel. Then, select [Custom Button 5] and press the center of the control wheel.**

3. **Select [Eye AF] using the top/bottom/left/right side of the control wheel, and then press the center.**
   - If you press the 5 button (Custom button 5) while shooting and eyes are detected, [Eye AF] will activate and the camera will focus on the eyes. Shoot images while holding down the 5 button (Custom button 5).

To use different functions for the dials/wheel depending on the shooting mode

If you add a check mark to [Separate M mode and other modes.] when assigning functions to the dials/wheel, you can assign different functions for [Manual Exposure] and the other exposure modes ([Intelligent Auto]/[Program Auto]/[Aperture Priority]/[Shutter Priority]).
If you add a check mark to [Separate Flexible Exp. and Intelligent Auto.] when assigning functions with [Custom Key/Dial Set.], you can assign different functions for [Flexible Exp. Mode] and [Intelligent Auto].

Hint

- You can also assign shooting functions to the focus hold button on the lens. However, some lenses do not have a focus hold button.

Related Topic

- Changing the function of the dial temporarily (My Dial Settings)

5-043-036-16(1) Copyright 2022 Sony Corporation

Changing the function of the dial temporarily (My Dial Settings)

S&Q

You can assign the desired functions to the front dial, rear dial, and control wheel, and register up to three combinations of settings as “My Dial” settings. You can quickly recall or switch registered “My Dial” settings by pressing the custom key you assigned in advance.

Registering functions to “My Dial”

Register the functions that you want to assign to the front dial, the rear dial, and the control wheel as [My Dial 1] through [My Dial 3].

1. MENU → (Setup) → [Dial Customize] → [My Dial Settings].
2. Select a dial or wheel for (My Dial 1), and press the center of the control wheel.
3. Select the desired function to assign using the top/bottom/left/right sides of the control wheel, and then press the center of the control wheel.
   - Select “--” (Not set) for a dial or wheel to which you do not want to assign any function.
4. After you select functions for all of the dials and the wheel in (My Dial 1) by repeating Steps 2 and 3, select [OK]. The settings for (My Dial 1) will be registered.
   - If you want to register (My Dial 2) and (My Dial 3) as well, follow the same procedure as described above.

Assigning a key to recall “My Dial”

Assign a custom key to recall the registered “My Dial” settings.

1. MENU → (Setup) → [Operation Customize] → [Custom Key/Dial Set.] or [Custom Key/Dial Set.] → Select the key that you want to use to recall “My Dial.”
2. Select the number of the “My Dial” setting that you want to recall or the pattern for switching “My Dial.”

Menu item details

My Dial 1 during Hold /My Dial 2 during Hold/My Dial 3 during Hold:
While you hold down the key, the functions that you registered in [My Dial Settings] are assigned to the dial/wheel.

My Dial 1→2→3 :
Each time you press the key, the function changes in the following sequence: “Normal function → Function of My Dial 1 → Function of My Dial 2 → Function of My Dial 3 → Normal function.”

Toggle My Dial 1 /Toggle My Dial 2/Toggle My Dial 3:
The function registered using [My Dial Settings] is maintained even if you do not hold down the key. Press the key again to return to the normal function.

Shooting while switching “My Dial”

During shooting, you can recall “My Dial” using the custom key, and shoot as you change the shooting setting by turning the front dial, the rear dial, and the control wheel.

In the following example, the functions listed below are registered to "My Dial," and [My Dial 1→2→3] is assigned to the 1 button (Custom button 1).

Operation part	My Dial 1	My Dial 2	My Dial 3
Control wheel	ISO	White Balance	Not set
Front dial	Aperture	Creative Look	Move AF Frame ↔ : Std
Rear dial	Shutter Speed	Exposure Comp.	Move AF Frame ↕ : Std

1. Press the 1 button (Custom button 1).
   The functions registered to [My Dial 1] will be assigned to the control wheel, the front dial, and the rear dial.

   - The icons for the functions registered to [My Dial 1] are displayed in the lower part of the screen.

2. Turn the control wheel to set the ISO value, turn the front dial to set the aperture value, and turn the rear dial to set the shutter speed.
3. Press the 1 button (Custom button 1) again. The functions registered to [My Dial 2] will be assigned to the control wheel, the front dial, and the rear dial.
4. Turn the control wheel to set [White Balance], turn the front dial to set [Creative Look], and turn the rear dial to set [Exposure Comp.].
5. Press the 1 button (Custom button 1) again, and change the setting values for the functions registered to [My Dial 3].

Note

- “My Dial” settings in which every dial/wheel is set to [Not set] are not recalled when you press the custom key. They are also skipped in [My Dial 1→2→3].
- Even if a dial/wheel has been locked using the [Lock Operation Parts] function, it will be unlocked temporarily when “My Dial” is recalled.

Related Topic

- Assigning frequently used functions to buttons and dials (Custom Key/Dial Set.)

5-043-036-16(1) Copyright 2022 Sony Corporation

Camera Set. Memory

Allows you to register up to 3 often-used modes or product settings to the product and up to 4 (M1 through M4) to the memory card. You can recall the settings using just the MODE (Mode) button.

1. **Set the product to the setting you want to register.**
2. **MENU → / (Shooting) → [Shooting Mode] → [MR Camera Set. Memory] → desired number.**
3. **Press the center of the control wheel to confirm.**

Items that can be registered

- You can register various functions for shooting. The items that can actually be registered are displayed on the menu of the camera.
- Aperture (F number)
- Shutter speed

To change registered settings

Change the setting to the desired one and re-register the setting to the same mode number.

Note

- M1 through M4 can be selected only when a memory card is inserted into the product.
- When registering the settings on a memory card, only a memory card that has been selected using [MR Memory/Recall Media] can be used.
- Program Shift cannot be registered.

Related Topic

- Recall Camera Setting
- Memory/Recall Media

5-043-036-16(1) Copyright 2022 Sony Corporation

Recall Camera Setting

Allows you to shoot an image after recalling your preferred shooting settings registered with [MR Camera Set. Memory].

1. **MODE (Mode) button → Select MR1, MR2, or MR3 (MR Recall Camera Setting) → Press the center of the control wheel.**
   - To recall settings registered to the memory card, select MENU → / (Shooting) → [Shooting Mode] → [MR Recall Camera Setting] and select the desired number.

Hint

- If you recall settings registered to the memory card, the settings are recalled from the memory card in the slot specified in [MR Memory/Recall Media]. You can confirm the memory card slot by selecting MENU → / (Shooting) → [Shooting Mode] → [MR Memory/Recall Media].
- Settings registered to a memory card using another camera of the same model name can be recalled with this camera.

Note

- If you set [MR Recall Camera Setting] after completing the shooting settings, the registered settings are given priority and the original settings may become invalid. Check the indicators on the screen before shooting.

Related Topic

- Camera Set. Memory
- Memory/Recall Media

5-043-036-16(1) Copyright 2022 Sony Corporation

Memory/Recall Media

S&Q

Selects the memory card slot from which settings are recalled or to which settings are registered for M1 through M4.

1. **MENU → / (Shooting) → [Shooting Mode] → [MR Memory/Recall Media] → desired slot.**

Menu item details

Slot 1:
Selects the slot 1.

Slot 2:
Selects the slot 2.

Related Topic

- Camera Set. Memory
- Recall Camera Setting

5-043-036-16(1) Copyright 2022 Sony Corporation

Registering shooting settings to a custom key (Reg. Custom Shoot Set)

You can register shooting settings (such as exposure, focus setting, drive mode, etc.) to a custom key in advance and temporarily recall them while holding down the key. Simply press the custom key to switch the settings quickly and release the key to go back to the original settings. This function is useful when recording active scenes such as sports.

1. **MENU → (Shooting) → [Shooting Mode] → [Reg. Custom Shoot Set] → Select a registration number from [Recall Custom hold 1] to [Recall Custom hold 3].**

   The setting screen for the selected number will be displayed.

2. **Using the top/bottom/left/right side of the control wheel, select the check boxes for the functions that you want to recall with one of the registration numbers and press the center to check each box.**

   A ✓ (check) mark will be displayed in the boxes for the functions.
   - To cancel a selection, press the center again.

3. **Select the function that you want to adjust using the top/bottom/left/right side of the control wheel, and press the center to adjust the function to the desired setting.**
   - Select [Import Current Setting] to register the current settings of the camera to the registration number that you chose.

4. **Select [Register].**

Items that can be registered

- You can register various functions for shooting. The items that can actually be registered are displayed on the menu of the camera.
- Exposure
- Focus setting
- Drive mode (other than self-timer)

To recall registered settings

1. MENU → (Setup) → [Operation Customize] → [Custom Key/Dial Set.] → Select the desired key and then select one of the registration numbers from [Recall Custom hold 1] to [Recall Custom hold 3].
2. On the shooting screen, press the shutter button while holding down the key to which you assigned one of the registration numbers.
   The registered settings are activated while you are holding down the custom key.

Hint

- You can change the settings for [Reg. Custom Shoot Set] after assigning one of the registration numbers to the custom key using [Custom Key/Dial Set.].

Note

- The registration numbers [Recall Custom hold 1] through [Recall Custom hold 3] are available only when the shooting mode is set to P/A/S/M.
- Depending on the attached lens and the status of the camera when the registered setting recall is executed, the registered settings may not take effect.

Related Topic

- Assigning frequently used functions to buttons and dials (Custom Key/Dial Set.)

5-043-036-16(1) Copyright 2022 Sony Corporation

Fn Menu Settings

The Function menu is a menu of 12 functions that is displayed at the bottom of the screen when you press the Fn (Function) button in the shooting mode.
You can register 12 functions to the Function menus for still image shooting and movie shooting, respectively.

The following is the procedure for changing [Drive Mode] in the still image function menu to [Grid Line Display].

- To change the movie function menu, select a movie function menu item in Step 2.

1. **MENU → (Setup) → [Operation Customize] → select [Fn Menu Settings].**

2. **Select (Drive Mode) from among the 12 still image function menu items using the top/bottom/left/right side of the control wheel, and then press the center.**

3. **Move to the screen showing [Grid Line Display] using the top/bottom/left/right side of the control wheel. Then, select [Grid Line Display] and press the center of the control wheel.**
   - (Grid Line Display) will be displayed in the former location of (Drive Mode) in the Function menu.

Hint

- When [Touch Operation] is set to [On], you can also open [Fn Menu Settings] by holding down the icon in the function menu.

Related Topic

- Using the function menu

5-043-036-16(1) Copyright 2022 Sony Corporation

Add Item

S&Q

You can register the desired menu items to ☆ (My Menu) under MENU.

1. **MENU → ☆ (My Menu) → [My Menu Setting] → [Add Item].**
2. **Select an item that you want to add to ☆ (My Menu) using the top/bottom/left/right sides of the control wheel.**
3. **Select a destination using the top/bottom/left/right sides of the control wheel.**

Hint

- You can add up to 42 items to ☆ (My Menu).

Note

- You cannot add the following items to ☆ (My Menu).
  - Any item under MENU → ▶ (Playback)

Related Topic

- Sort Item
- Delete Item
- Using the menu

5-043-036-16(1) Copyright 2022 Sony Corporation

Sort Item

You can rearrange the menu items added to ☆ (My Menu) under MENU.

1. **MENU → ☆ (My Menu) → [My Menu Setting] → [Sort Item].**
2. **Select an item that you want to move using the top/bottom/left/right sides of the control wheel.**
3. **Select a destination using the top/bottom/left/right sides of the control wheel.**

Related Topic

- Add Item

5-043-036-16(1) Copyright 2022 Sony Corporation

Delete Item

You can delete menu items added to ☆ (My Menu) of MENU.

1. **MENU → ☆ (My Menu) → [My Menu Setting] → [Delete Item].**
2. **Select an item that you want to delete using the top/bottom/left/right sides of the control wheel, and then press the center to delete the selected item.**

Hint

- To delete all the items on a page, select MENU → ☆ (My Menu) → [My Menu Setting] → [Delete Page].
- You can delete all the items added to ☆ (My Menu) by selecting MENU → ☆ (My Menu) → [My Menu Setting] → [Delete All].

Related Topic

- Delete Page
- Delete All
- Add Item

5-043-036-16(1) Copyright 2022 Sony Corporation

Delete Page

You can delete all the menu items added to a page under ☆ (My Menu) in MENU.

1. **MENU → ☆ (My Menu) → [My Menu Setting] → [Delete Page].**
2. **Select a page that you want to delete using the top/bottom sides of the control wheel, and then press the center of the control wheel to delete the items.**

Related Topic

- Delete All
- Add Item

5-043-036-16(1) Copyright 2022 Sony Corporation

Delete All

You can delete all the menu items added to ☆ (My Menu) in MENU.

1. **MENU → ☆ (My Menu) → [My Menu Setting] → [Delete All].**
2. **Select [OK].**

Related Topic

- Delete Page
- Add Item

5-043-036-16(1) Copyright 2022 Sony Corporation

Interchangeable Lens Digital Camera
ILME-FX30

Display From My Menu

You can set My Menu to appear first when you press the MENU button.

1. **MENU → ☆ (My Menu) → [My Menu Setting] → [Display From My Menu] → desired setting.**

Menu item details

On:
My Menu appears first when you press the MENU button.

Off:
The most recently displayed menu appears when you press the MENU button.

Related Topic

- Add Item
- Using the menu

5-043-036-16(1) Copyright 2022 Sony Corporation

Different Set for Still/Mv

For each item in still image shooting and movie recording, you can select whether to use a common setting or separate settings.

1. **MENU → (Setup) → [Operation Customize] → Select [Different Set for Still/Mv].**

   The operation guide screen will appear. Select [OK] to display the setting screen.

2. **Add check marks to the items that you want to set separately for still image shooting and movie recording, and then select [OK].**

   - You can set the following items separately for still image shooting and movie recording.
     - Aperture
     - Shutter Speed
     - ISO
     - Exposure Comp.
     - Metering Mode
     - White Balance
     - Picture Profile
     - Focus Mode

Hint

- When you switch from a common setting to separate settings with [Different Set for Still/Mv], the current settings are applied to both still image shooting and movie recording. However, the custom white balance setting is only applied to still image shooting.
- When you switch from separate settings to a common setting with [Different Set for Still/Mv], the setting values of items return to their initial values. As an exception, the setting values for still image shooting are applied to the aperture value, shutter speed, and custom white balance settings.

Note

- When [Shutter Mode] is set to [Angle], even if [Shutter Speed] is set to a common setting in [Different Set for Still/Mv], the shutter speeds for still images and movies will operate as different settings.

5-043-036-16(1) Copyright 2022 Sony Corporation

Av/Tv Rotate

Sets the direction of rotation for the front dial, rear dial, or control wheel when changing the aperture value or shutter speed.

1. **MENU → (Setup) → [Dial Customize] → [Av/Tv Rotate] → desired setting.**

Menu item details

Normal:
Does not change the direction of rotation for the front dial, rear dial, or control wheel.

Reverse:
Reverses the direction of rotation for the front dial, rear dial, or control wheel.

5-043-036-16(1) Copyright 2022 Sony Corporation

Lock Operation Parts

S&Q

You can set whether the multi-selector, dials, and wheel can be locked by pressing and holding down the Fn (Function) button.

1. **MENU → (Setup) → [Dial Customize] → [Lock Operation Parts] → desired setting.**
   - To lock the operating parts, hold down the Fn (Function) button until the message “Locked.” appears on the monitor.

Menu item details

Off:
Does not lock the multi-selector, front dial, rear dial, or control wheel even if you press and hold down the Fn (Function) button.

Multi-Selector Only:
Locks the multi-selector.

Dial + Wheel:
Locks the front dial, rear dial, and control wheel.

All:
Locks the multi-selector, front dial, rear dial, and control wheel.

Hint

- You can release the lock by holding the Fn (Function) button down again.
- You can lock all buttons, dials, and wheels except the shutter button by pressing and holding the MENU button and the Fn (Function) button simultaneously for 5 seconds. Press and hold the MENU button and the Fn button simultaneously for 5 seconds again to release the lock.

Note

- If you set [AF Area Registration] to [On], [Lock Operation Parts] will be fixed to [Off].

Related Topic

- Registering the current focus area (AF Area Registration)

5-043-036-16(1) Copyright 2022 Sony Corporation

REC w/ Shutter (movie)

You can start or stop recording movies by pressing the shutter button instead of the REC (recording) button.

1. **MENU → (Setup) → [Operation Customize] → [REC w/ Shutter] → desired setting.**

Menu item details

On:
Enables movie recording using the shutter button when the shooting mode is set to [Movie] or [S&Q Motion].

Off:
Disables movie recording using the shutter button.

Hint

- When [REC w/ Shutter] is set to [On], you can use the shutter button to start or stop recording movies on an external recording/playback device using [REC Control].

Note

- When [REC w/ Shutter] is set to [On], you cannot focus by pressing the shutter button halfway down during movie recording.

Related Topic

- Shooting movies

5-043-036-16(1) Copyright 2022 Sony Corporation

Monitor Flip Direction

The direction of image and menu screen displays can be inverted according to how the monitor is opened and the orientation of the monitor.

1. **MENU → (Setup) → [Monitor] → [Monitor Flip Direction] → desired setting.**

Menu item details

Auto:
Inverts the direction of the display of the monitor by detecting how the monitor is opened and the orientation of the monitor.

Horizontal Flip:
Flips the display of the monitor horizontally when shooting.

180 Degree Flip:
Rotates the display of the monitor 180 degrees for all kinds of displays such as images and menu screens.

No Flip:
Does not invert the display of the monitor.

Hint

- By repeatedly pressing the key to which the [Switch Monitor Flip Disp] function is assigned, you can switch the setting in the order of [Horizontal Flip] → [180 Degree Flip] → [No Flip] → [Horizontal Flip]. When [Monitor Flip Direction] is set to [Auto], the display method is temporarily switched while the setting value remains [Auto].

Note

- Even if [Monitor Flip Direction] is set to [Horizontal Flip], the direction of the monitor display during playback will not be inverted.

5-043-036-16(1) Copyright 2022 Sony Corporation

DISP (Screen Disp) Set

Allows you to set the screen display modes that can be selected using DISP (Display Setting) in shooting mode.

1. **MENU → (Setup) → [Operation Customize] → [DISP (Screen Disp) Set] → desired setting → [Enter].**
   The items marked with ✓ (check) are available.

Menu item details

Display All Info. :
Shows recording information.

No Disp. Info. :
Does not show recording information.

Histogram :
Displays the luminance distribution graphically.

Level :
Indicates whether the product is level in both the front-back **(A)** and horizontal **(B)** directions. When the product is level in either direction, the indicator turns to green.

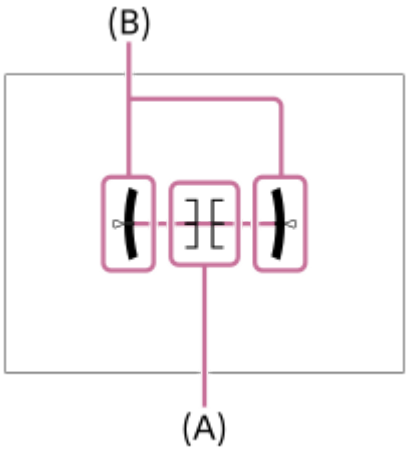

Note

- If you tilt the product forward or backward by a large degree, the level error will be great.
- The product may have a margin of error of almost ±1° even when the inclination is corrected by the level.

Related Topic

- Using the DISP (Display Setting) button

5-043-036-16(1) Copyright 2022 Sony Corporation

Home (Lower Left)

Select the setting item you want to display in the bottom left of the home screen.
This function can be used when the camera's system software (firmware) is Ver.6.00 or later.

1. **MENU → (Setup) → [Operation Customize] → [Home (Lower Left)] → desired setting.**

Menu item details

ND Filter:
The setting value for [ND Filter] is displayed in the bottom left of the home screen.

Aperture:
The aperture setting value is displayed in the bottom left of the home screen.

Related Topic

- Using the home screen

5-043-036-16(1) Copyright 2022 Sony Corporation

Contents of this chapter

The following table of contents lists the features described in this chapter (“Viewing”). From each item name, you can jump to the page describing the respective functions.

Viewing images

- Selecting which memory card to play back (Select Playback Media)
- Playing back still images
- Enlarging an image being played back (Enlarge Image)
- Enlarge Initial Mag.
- Enlarge Initial Position
- Rotating recorded images automatically (Display Rotation)
- Playing back movies
- Volume Settings
- 4ch Audio Monitoring (movie)
- Playing back images using slideshow (Slide Show)
- Cont. Play for Interval
- Play Speed for Interval

Changing how images are displayed

- Playing back images on the image index screen (Image Index)
- Switching between still images and movies (View Mode)
- Display as Group
- Focus Frame Display (playback)
- Disp Specified Time Img.

Setting the method for jumping between images (Image Jump Setting)

Protecting recorded images (Protect)

Adding information to images

- Rating
- Rating Set(Custom Key)
- Clip Flag
- Rotating an image (Rotate)

Extracting still images from a movie

- Photo Capture
- JPEG/HEIF Switch (Photo Capture)

Copying images from one memory card to another (Copy)

Deleting images

- Deleting multiple selected images (Delete)
- Delete pressing twice

- Delete confirm.

Viewing images on a TV

- Viewing images on a TV using an HDMI cable

5-043-036-16(1) Copyright 2022 Sony Corporation

Selecting which memory card to play back (Select Playback Media)

Selects a slot that contains a memory card.

1. **MENU → ▶ (Playback) → [Playback Target] → [Select Playback Media] → desired slot.**

Menu item details

Slot 1:
Selects the slot 1.

Slot 2:
Selects the slot 2.

Note

- When you select [Date View] in [View Mode], the camera only plays back images from a memory card selected using [Select Playback Media].

Related Topic

- Switching between still images and movies (View Mode)

5-043-036-16(1) Copyright 2022 Sony Corporation

Playing back still images

Plays back the recorded images.

1. **Select MENU → ▶ (Playback) → [Playback Target] → [Select Playback Media] to choose which memory card slot to play back.**

2. **Press the ▶ (Playback) button to switch to the playback mode.**

3. **Select the image with the control wheel.**
   - When [Display as Group] is set to [On], images shot with interval shooting are displayed as one group. To play back the images in the group, press the center of the control wheel.

Hint

- The product creates an image database file on a memory card to record and play back images. An image that is not registered in the image database file may not be played back correctly. To play back images shot using other devices, register those images to the image database file using MENU → 📷/🎥 (Shooting) → [Media] → [Recover Image DB].
- If you play back the images right after continuous shooting, the monitor may display an icon indicating that data is being written/the number of images left to write. During writing, some functions are not available.
- When [▶ Focus Frame Display] is set to [On], the focus frame at the time of shooting is displayed over played-back images. The focus frame that the camera used to focus during shooting is displayed in green. Even if multiple focus frames are displayed during shooting, only the one on which the camera actually tried to focus will be displayed during playback.

Related Topic

- Selecting which memory card to play back (Select Playback Media)
- Recover Image DB (still image/movie)
- Display as Group
- Focus Frame Display (playback)
- Enlarging an image being played back (Enlarge Image)

5-043-036-16(1) Copyright 2022 Sony Corporation

Enlarging an image being played back (Enlarge Image)

Enlarges the still image being played back. Use this function to check the focus of the image, etc.

1. **Display the image you want to enlarge, and slide the W/T (zoom) lever to the T side.**
   - Slide the W/T (zoom) lever to the W side to adjust the zoom scale.
   - By rotating the front/rear dial, you can switch to the previous or next image while keeping the same zoom scale.
   - The view will zoom in on the part of the image where the camera focused during shooting. If the focus location information cannot be obtained, the camera will zoom in on the center of the image.
2. **Select the portion you want to enlarge by pressing the top/bottom/right/left sides of the control wheel.**
3. **Press the MENU button or the center of the control wheel to exit the playback zoom.**

Hint

- You can also enlarge an image being played back using MENU.
- You can change the initial magnification and initial position of enlarged images by selecting MENU → ▶ (Playback) → [Magnification] → [Enlarge Initial Mag.] or [Enlarge Initial Position].
- You can also enlarge the image by touching the monitor. Drag the monitor to move the enlarged position. Set [Touch Operation] to [On] beforehand.

Related Topic

- Enlarge Initial Mag.
- Enlarge Initial Position
- Touch Operation
- Touch operations on the monitor

5-043-036-16(1) Copyright 2022 Sony Corporation

Enlarge Initial Mag.

Sets the initial magnification scale when playing back enlarged images.

1. **MENU → ▶ (Playback) → [Magnification] → [Enlarge Initial Mag.] → desired setting.**

Menu item details

Standard. Mag.:
Displays an image with the standard magnification.

Previous Mag.:
Displays an image with the previous magnification. The previous magnification is stored even after the enlarged display screen is closed.

Related Topic

- Enlarging an image being played back (Enlarge Image)
- Enlarge Initial Position

5-043-036-16(1) Copyright 2022 Sony Corporation

Enlarge Initial Position

Sets the initial position when enlarging an image in playback.

1. **MENU → (Playback) → [Magnification] → [Enlarge Initial Position] → desired setting.**

Menu item details

Focused Position:
Enlarges the image from the point of focus during shooting.
Center:
Enlarges the image from the center of the screen.

Related Topic

- Enlarging an image being played back (Enlarge Image)
- Enlarge Initial Mag.

5-043-036-16(1) Copyright 2022 Sony Corporation

Rotating recorded images automatically (Display Rotation)

Selects the orientation when playing back recorded images.

1. **MENU → ▶ (Playback) → [Playback Option] → [Display Rotation] → desired setting.**

Menu item details

Auto:
When you rotate the camera, the camera detects the vertical and horizontal directions, and displays the image being played back according to the orientation.

Manual:
Images shot vertically are displayed vertically. If you have set the image orientation using the [Rotate] function, the image will be displayed accordingly.

Off:
Images are always displayed horizontally.

Note

- Movies shot vertically are played back horizontally during movie playback.

Related Topic

- Rotating an image (Rotate)

5-043-036-16(1) Copyright 2022 Sony Corporation

Playing back movies

Plays back the recorded movies.

1. **Select the slot of the memory card to be played back from MENU → ▶ (Playback) → [Playback Target] → [Select Playback Media].**
2. **Press the ▶ (playback) button to switch to playback mode.**
3. **Select the movie to be played back using the control wheel and press the center of the control wheel to start playback.**

Available operations during movie playback

You can perform slow playback and sound volume adjustment, etc. by pressing the down side of the control wheel.

- ▶ : Playback
- ❚❚ : Pause
- ▶▶ : Fast-forward
- ◀◀ : Fast-rewind
- ❚▶ : Forward slow playback
- ◀❚ : Reverse slow playback
- ▶▶❚ : Next movie file
- ❚◀◀ : Previous movie file
- ❚❚▶ : Displays the next frame
- ◀❚❚ : Displays the previous frame
- : Photo Capture
- : Sound volume adjustment
- : Closes the operation panel

Hint

- The product creates an image database file on a memory card to record and play back images. An image that is not registered in the image database file may not be played back correctly. To play back images shot using other devices, register those images to the image database file using MENU → / (Shooting) → [Media] → [Recover Image DB].
- “Forward slow playback,” “Reverse slow playback,” “Displays the next frame” and “Displays the previous frame” are available during pause.
- Movie files recorded using other products may not be playable on this camera.
- For movies with Shot Marks, the positions of the Shot Marks are displayed on the playback bar during movie playback. In addition, the Shot Mark icon is displayed on the screen when a scene to which a Shot Mark was added is played back.
- You can jump to the positions of Shot Marks by turning the rear dial while paused.

Note

- Even if you shoot the movie vertically, the movie will be displayed horizontally on the screen of the camera.

Related Topic

- Selecting which memory card to play back (Select Playback Media)
- Recover Image DB (still image/movie)
- Switching between still images and movies (View Mode)

5-043-036-16(1) Copyright 2022 Sony Corporation

Volume Settings

Sets the sound volume for movie playback.

1. **MENU → (Setup) → [Sound Option] → [Volume Settings] → desired setting.**

Adjusting the volume during playback

Press the bottom side of the control wheel while playing back movies to display the operation panel, then adjust the volume. You can adjust the volume while listening to the actual sound.

5-043-036-16(1) Copyright 2022 Sony Corporation

4ch Audio Monitoring (movie)

Sets the audio to be monitored by the device connected to the (headphone) terminal of the camera when you record movie audio in 4 channels or when playing back a movie recorded in 4 channels.

1. **MENU → (Setup) → [Sound Option] → [4ch Audio Monitoring] → desired setting.**

Menu item details

CH1/CH2:
Outputs audio from channel 1 to the L (left) side and from channel 2 to the R (right) side.

CH3/CH4:
Outputs audio from channel 3 to the L (left) side and from channel 4 to the R (right) side.

CH1+3/CH2+4:
Outputs the mixed audio of channel 1 and channel 3 to the L (left) side and the mixed audio of channel 2 and channel 4 to the R (right) side.

CH1/CH1:
Outputs audio from channel 1 to the L (left) side and R (right) side.

CH2/CH2:
Outputs audio from channel 2 to the L (left) side and R (right) side.

Note

- The [4ch Audio Monitoring] settings are enabled during movie recording when the XLR handle unit (supplied only with the ILME-FX30) or an accessory for 4-channel audio recording is attached to the Multi Interface Shoe of the camera and the camera is set to record 4-channel audio.
- The camera cannot output audio in 4 channels to the device connected to the (headphone) terminal of the camera.
- When outputting audio through the speakers of the camera, the channels will also change depending on the [4ch Audio Monitoring] setting.

Related Topic

- Shoe Audio Set.

5-043-036-16(1) Copyright 2022 Sony Corporation

Interchangeable Lens Digital Camera
ILME-FX30

Playing back images using slideshow (Slide Show)

Automatically plays back images continuously.

1. **MENU → ▶ (Playback) → [Viewing] → [Slide Show] → desired setting.**
2. **Select [Enter].**

Menu item details

Repeat:
Select [On], in which images are played back in a continuous loop, or [Off], in which the product exits the slideshow when all the images are played back once.

Interval:
Select the display interval for images from among [1 Sec], [3 Sec], [5 Sec], [10 Sec] or [30 Sec].

To quit the slideshow in the middle of playback

Press the MENU button to quit the slideshow. You cannot pause the slideshow.

Hint

- During playback, you can display the next/previous image by pressing the right/left side of the control wheel.
- You can activate a slideshow only when [View Mode] is set to [Date View] or [Folder View(Still)].

5-043-036-16(1) Copyright 2022 Sony Corporation

Cont. Play for Interval

Continuously plays back images shot using interval shooting.
You can create movies from still images produced by interval shooting using the computer software Imaging Edge Desktop(Viewer). You cannot create movies from the still images on the camera.

1. **MENU → ▶ (Playback) → [Viewing] → [Cont. Play for Interval].**
2. **Select the image group that you want to play back, and then press the center of the control wheel.**

Hint

- On the playback screen, you can start continuous playback by pressing the down button while displaying an image in the group.
- You can resume play or pause by pressing the down button during playback.
- You can change the playback speed by turning the front/rear dial or the control wheel during playback. You can also change the playback speed by selecting MENU → ▶ (Playback) → [Viewing] → [Play Speed for Interval].

Related Topic

- Interval Shoot Func.
- Play Speed for Interval
- Introduction to computer software (Imaging Edge Desktop/Catalyst)

5-043-036-16(1) Copyright 2022 Sony Corporation

Interchangeable Lens Digital Camera
ILME-FX30

Play Speed for Interval

Sets the playback speed for still images during [Cont. Play for Interval].

1. **MENU → (Playback) → [Viewing] → [Play Speed for Interval] → desired setting.**

Hint

- You can also change the playback speed by turning the front/rear dial or the control wheel during [Cont. Play for Interval].

Related Topic

- Cont. Play for Interval

5-043-036-16(1) Copyright 2022 Sony Corporation

Playing back images on the image index screen (Image Index)

You can display multiple images at the same time in playback mode.

1. **Slide the W/T (zoom) lever to the W side while the image is being played back.**
2. **Select the image by pressing the top/bottom/right/left sides of the control wheel or turning the control wheel.**

To change the number of images to be displayed

MENU → ▶ (Playback) → [Playback Option] → [Image Index] → desired setting.

Menu item details

9 Images/25 Images

To return to single-image playback

Select the desired image and press the center of the control wheel.

To display a desired image quickly

Select the bar on the left of the image index screen using the control wheel, then press the top/bottom sides of the control wheel. While the bar is being selected, you can display the calendar screen or folder selection screen by pressing the center. In addition, you can switch View Mode by selecting an icon.

Related Topic

- Switching between still images and movies (View Mode)

5-043-036-16(1) Copyright 2022 Sony Corporation

Interchangeable Lens Digital Camera
ILME-FX30

Switching between still images and movies (View Mode)

Sets the View Mode (image display method).

1. **MENU → ▶ (Playback) → [Playback Target] → [View Mode] → desired setting.**

Menu item details

Date View:
Displays the images by date.

Folder View(Still):
Displays only still images.

Movie View:
Displays only movies by date.

5-043-036-16(1) Copyright 2022 Sony Corporation

Display as Group

Sets whether or not to display images shot using interval shooting as a group.

1. **MENU → ▶ (Playback) → [Playback Option] → [Display as Group] → desired setting.**

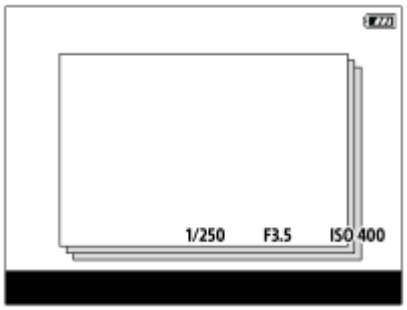

Menu item details

On:

Displays images as a group.

To play back the images in a group, select the group and press the center of the control wheel.

Off:

Does not display images as a group.

Hint

- The following images are grouped.
  - Images shot with [Interval Shoot Func.] (Images shot during one session of interval shooting become one group.)
- On the image index screen, (Display as Group) icon is displayed over the group.

Note

- If you delete the group, all the images in the group will be deleted.

Related Topic

- Interval Shoot Func.

5-043-036-16(1) Copyright 2022 Sony Corporation

Focus Frame Display (playback)

Sets whether or not to display a focus frame around the area where the camera focused when you play back a still image.

1. **MENU → [▶] (Playback) → [Playback Option] → [▶ Focus Frame Display] → desired setting.**

Menu item details

Off:
Does not display a focus frame during playback.

On:
Displays a focus frame in green during playback. If the image is not in focus, the focus frame will be displayed in white.

Hint

- Even if multiple focus frames are displayed at the time of shooting, only the one indicating where the camera actually focused will be displayed during playback.
- Even if a focus frame is displayed around the face of the subject at the time of shooting, the focus frame will be displayed around the eye during playback when an eye is detected.

Note

- A focus frame will not be displayed over the following images.
  - Still images shot with manual focus
  - Movies
  - Still images created with [Photo Capture]
- The focus frame is displayed only on the single-image playback screen. The focus frame is not displayed on the image index screen or over enlarged images.
- The focus frame is not displayed during auto reviewing.
- If you shoot an image with a different composition after performing auto-focusing, the focus frame will appear offset from the subject.
- Even if the focus frame is displayed in green, it may not be in focus to the subject.
- Even if you turn off the focusing frame display while shooting using the [AF Area Auto Clear] or [AF-C Area Display] function, when [▶ Focus Frame Display] is set to [On], the focusing frame will be displayed during playback.

5-043-036-16(1) Copyright 2022 Sony Corporation

Disp Specified Time Img.

You can play back images by specifying the shooting date and time.

1. **MENU → ▶ (Playback) → [Playback Option] → [Disp Specified Time Img.].**

2. **Set the date and time of the image to be played back using the control wheel, and then press the center.**

   The image shot on the specified date and time will be played back.

   - If there are no images shot on the specified date and time, the image shot on the closest date and time will be played back.

Note

- When [Disp Specified Time Img.] is performed while playing back images in a group, the image shot on the closest date and time in the group is played back.
- For movies, the date and time when the recording was started are treated as the shooting date and time.

5-043-036-16(1) Copyright 2022 Sony Corporation

Interchangeable Lens Digital Camera
ILME-FX30

Setting the method for jumping between images (Image Jump Setting)

Sets the method of jumping between playback images for the front dial and rear dial, respectively.

1. **MENU → [▶] (Playback) → [Playback Option] → [Image Jump Setting] → Select the dial for which you would like to change the setting, and then select the desired setting.**

Menu item details

One by one / By 10 images / By 100 images:
Jumps in units of the specified number of images.

By 3 minutes/By 5 minutes/By 10 minutes/By 30 minutes/By 1 hour/By 3 hours/By 6 hours/By 12 hours/By 24 hours:
Jumps between images by the specified time unit based on the shooting date and time of the images.

Protect Only:
Plays back only protected images.

Rating Only:
Plays back all rated images.

Rating Only (★) - Rating Only (⁂):
Plays back only images for which a rating (★ to ⁂) has been specified.

W/O Rating Only:
Plays back only images that are not rated.

Shot Mark Only:
Sets the image jump target only to images with Shot Marks.

Shot Mark1 Only/Shot Mark2 Only:
Sets the image jump target only to images with the specified Shot Mark.

No Shot Mark:
Sets the image jump target only to images without Shot Marks.

Divider Frame Only:
Sets the image jump target only to divider frames.

Image After Divider:
Sets the image jump target only to images next to divider frames.

To add a Shot Mark to a movie

If you add a Shot Mark to a movie, you can use it as a mark for selecting, transferring, or editing the movie.
Assign [Add Shot Mark1] / [Add Shot Mark2] to the desired key using [Custom Key/Dial Set.] and press the custom key while recording a movie.

- You can also add a Shot Mark during movie playback by assigning [Add/Delete Shot Mark1] / [Add/Delete Shot Mark2] to the desired key with [Custom Key Setting] and pressing the custom key.

To create a divider frame

By creating a divider frame between sessions of shooting, you can use it as a mark when selecting images.
Assign [Create Divider Frame] to the desired key using [Custom Key/Dial Set.] in advance and press the custom key when you want to create a divider frame.

Note

- When [One by one], [By 10 images], or [By 100 images] is selected, one group is counted as one image.

Related Topic

- Rating
- Protecting recorded images (Protect)
- Assigning frequently used functions to buttons and dials (Custom Key/Dial Set.)

5-043-036-16(1) Copyright 2022 Sony Corporation

Protecting recorded images (Protect)

Protects recorded images against accidental erasure. The (protect) mark is displayed on protected images.

1. **MENU → (Playback) → [Selection/Memo] → [Protect] → desired setting.**

Menu item details

Multiple Img.:
Applies the protection of the selected multiple images.
(1) Select the image to be protected, then press the center of the control wheel. The (check) mark is displayed in the check box. To cancel the selection, press the center again to remove the (check) mark.
(2) To protect other images, repeat step (1).
(3) MENU → [OK].

All in this Folder:
Protects all images in the selected folder.

Cancel All in this Folder:
Cancels the protection of all images in the selected folder.

All with this date:
Protects all images taken on the selected date.

Cancel All with this date:
Cancels the protection of all images taken on the selected date.

All Images in This Group:
Protects all the images in the selected group.

Cancel All in This Group:
Cancels the protection of all the images in the selected group.

Hint

- If you assign [Protect] to the key of your choice using MENU → (Setup) → [Operation Customize] → [Custom Key Setting], you can protect images or cancel protection by simply pressing the key.
- If you select a group in [Multiple Img.], all the images in the group will be protected. To select and protect particular images within the group, execute [Multiple Img.] while displaying the images within the group.

Note

- The menu items that can be selected vary according to the [View Mode] setting and the selected content.

5-043-036-16(1) Copyright 2022 Sony Corporation

Rating

You can assign ratings to recorded images on a scale of the number of stars (★ - ★★★) to make it easier to find images.

1. **MENU → ▶ (Playback) → [Selection/Memo] → [Rating].**

   The image rating selection screen will appear.

2. **Press the left/right sides of the control wheel to display an image to which you want to assign a rating, and then press the center.**

3. **Select the level of ★ (Rating) by pressing the left/right side of the control wheel, and then press the center.**

4. **Press the MENU button to exit the rating setting screen.**

To set ratings when shooting still images

Assign [Add Rating (★)] through [Add Rating (★★★)] to the desired keys using [📷 Custom Key/Dial Set.] in advance and press the custom keys after shooting a still image. You can set the rating for the last shot still image.

- Ratings cannot be set when shooting movies.

Hint

- You can also assign ratings when playing back images by using the custom key. Assign [Rating] to the desired key using [▶ Custom Key Setting] beforehand, and then press the custom key while playing back an image to which you want to assign a rating. The level of ★ (Rating) changes each time you press the custom key.
- By specifying ratings with the [Image Jump Setting] function, you can quickly find the desired image.

Related Topic

- Assigning frequently used functions to buttons and dials (Custom Key/Dial Set.)
- Rating Set(Custom Key)
- Setting the method for jumping between images (Image Jump Setting)

5-043-036-16(1) Copyright 2022 Sony Corporation

Rating Set(Custom Key)

Sets the available number of ★ (rating) when rating (ranking) images with the key to which you have assigned [Rating] using [▶ Custom Key Setting].

1. **MENU → ▶ (Playback) → [Selection/Memo] → [Rating Set(Custom Key)].**

2. **Add a ✓ (check) mark to the number of ★ (rating) that you want to activate.**

   You can select the checked number when setting [Rating] using the custom key.

Related Topic

- Rating
- Assigning frequently used functions to buttons and dials (Custom Key/Dial Set.)

5-043-036-16(1) Copyright 2022 Sony Corporation

Clip Flag

During or after movie recording, you can mark clips with three types of flags: OK/NG/KEEP. The flags serve as markers for selection and editing during the post-production process.
This function can be used when the camera's system software (firmware) is Ver.5.00 or later.

1. **MENU → [▶] (Playback) → [Selection/Memo] → [Clip Flag].**

   The clip flag image selection screen will appear.

2. **Press the left/right side of the control wheel to display an image to which you want to add a clip flag, and then press the center of the control wheel.**

3. **Select a clip flag type by pressing the left/right side of the control wheel, and then press the center of the control wheel.**

   The clip flag settings cycle through the following: OK → NG → KEEP → No flag → OK.

4. **Press the MENU button to exit the clip flag setting screen.**

To set a clip flag with a custom key

You can assign [Clip Flag OK], [Clip Flag NG], or [Clip Flag KEEP] to the desired key in advance using [Custom Key/Dial Set.] or [▶ Custom Key Setting]. Then, you can add a clip flag by pressing that key during movie recording or playback.

- To remove a clip flag that you have added, press the key to which the clip flag setting is assigned twice.
- Clip flags can be overwritten. If you want to change the type of clip flag, press the key assigned the clip flag type to which you want to change.

5-043-036-16(1) Copyright 2022 Sony Corporation

Rotating an image (Rotate)

Rotates a recorded image counter-clockwise.

1. **Display the image to be rotated, then select MENU → ▶ (Playback) → [Edit] → [Rotate].**

2. **Press the center of the control wheel.**

   The image is rotated counter-clockwise. The image rotates as you press the center.
   If you rotate the image once, the image remains rotated even after the product is turned off.

Note

- Even if you rotate a movie file, it will be played back horizontally on the monitor of the camera.
- You may not be able to rotate images shot using other products.
- When viewing rotated images on a computer, the images may be displayed in their original orientation depending on the software.

5-043-036-16(1) Copyright 2022 Sony Corporation

Photo Capture

Captures a chosen scene in a movie to save as a still image. First shoot a movie, then pause the movie during playback to capture decisive moments that tend to be missed when shooting still images, and save them as still images.

1. **Display the movie that you want to capture as a still image.**
2. **MENU → (Playback) → [Edit] → [Photo Capture].**
3. **Play back the movie and pause it.**
4. **Find the desired scene using forward slow playback, reverse slow playback, displays the next frame, and displays the previous frame, and then stop the movie.**
5. **Press (Photo Capture) to capture the chosen scene.**

   The scene is saved as a still image.

Hint

- With [JPEG/HEIF Switch], you can select either JPEG or HEIF as the recording file format for still images.

Related Topic

- Shooting movies
- Playing back movies
- JPEG/HEIF Switch (Photo Capture)

5-043-036-16(1) Copyright 2022 Sony Corporation

JPEG/HEIF Switch (Photo Capture)

Switches the file format (JPEG / HEIF) for still images captured with [Photo Capture].
You can view and edit JPEG files in various environments. The HEIF format has high compression efficiency. The camera can record with high image quality and small file sizes in the HEIF format. Depending on the computer or software, you may not be able to view or edit HEIF files. In addition, a HEIF-compatible environment is required to play back still images in the HEIF format. You can enjoy high-quality still images by connecting the camera and the TV via HDMI.

1. **MENU → ▶ (Playback) → [Edit] → [JPEG/HEIF Switch] → desired setting.**

Menu item details

JPEG:
Switches the file format for still images captured to JPEG. This setting gives priority to compatibility.

HEIF(4:2:0):
Switches the file format for still images captured to HEIF 4:2:0 10bit. This setting gives priority to image quality and compression efficiency.

HEIF(4:2:2):
Switches the file format for still images captured to HEIF 4:2:2 10bit. This setting gives priority to image quality.

Note

- HEIF image files recorded with this camera cannot be displayed on other cameras that do not support the HEIF file format. Be careful not to accidentally erase HEIF image files by formatting the memory card or deleting the files.

Related Topic

- Photo Capture

5-043-036-16(1) Copyright 2022 Sony Corporation

Copying images from one memory card to another (Copy)

You can copy images from a memory card in a slot that is selected using [Select Playback Media] to a memory card in another slot.

1. **MENU → ▶ (Playback) → [Edit] → [Copy].**

   All of the contents with a date or in a folder currently being played back will be copied to a memory card in another slot.

Hint

- You can select the type of images to be displayed by selecting MENU → ▶ (Playback) → [Playback Target] → [View Mode].

Note

- If images in a group are copied, the copied images will not be displayed as a group on the destination memory card.
- If protected images are copied, the protection will be canceled on the destination memory card.
- It may take a long time when many images are to be copied. Use a sufficiently charged battery pack.
- To copy a movie, the destination memory card must support the recording format of the movie. If the movie cannot be copied, a message will be displayed on the monitor of the camera.

Related Topic

- Selecting which memory card to play back (Select Playback Media)
- Switching between still images and movies (View Mode)

5-043-036-16(1) Copyright 2022 Sony Corporation

Deleting multiple selected images (Delete)

You can delete multiple selected images. Once you have deleted an image, you cannot restore it. Confirm the image to be deleted beforehand.

1. **MENU → ▶ (Playback) → [Delete] → [Delete] → desired setting.**

Menu item details

All Other Than This Img.:
Deletes all images in the group except the selection.

All Images in This Group:
Deletes all images in the selected group.

Multiple Img.:
Deletes the selected images.

(1) Select the images to be deleted, then press the center of the control wheel. The ✓ (check) mark is displayed in the check box. To cancel the selection, press the center again to remove the ✓ (check) mark.

(2) To delete other images, repeat step (1).

(3) MENU → [OK].

All in this Folder:
Deletes all images in the selected folder.

All with this date:
Deletes all images taken on the selected date.

Hint

- Perform [Format] to delete all images, including protected images.
- To display the desired folder or date, select the desired folder or date during playback by performing the following procedure: Move the W/T (zoom) lever to W side → select the bar on the left using the control wheel → select the desired folder or date using the top/bottom sides of the control wheel.
- If you select a group in [Multiple Img.], all the images in the group will be deleted. To select and delete particular images within the group, execute [Multiple Img.] while displaying the images within the group.

Note

- The protected images cannot be deleted.
- The menu items that can be selected vary according to the [View Mode] setting and the selected content.

Related Topic

- Display as Group
- Using the Delete button
- Format

5-043-036-16(1) Copyright 2022 Sony Corporation

Interchangeable Lens Digital Camera
ILME-FX30

Delete pressing twice

Sets whether or not you can delete the image currently being played back by pressing the (Delete) button twice in sequence.

1. **MENU → (Playback) → [Delete] → [Delete pressing twice] → desired setting.**

Menu item details

On:
Enables you to delete the image currently being played back by pressing the (Delete) button twice.

Off:
Does not enable you to delete the image currently being played back by pressing the (Delete) button twice.

5-043-036-16(1) Copyright 2022 Sony Corporation

Delete confirm.

You can set whether [Delete] or [Cancel] is selected as a default on the delete confirmation screen.

1. **MENU → ▶ (Playback) → [Delete] → [Delete confirm.] → desired setting.**

Menu item details

"Delete" first:
[Delete] is selected as the default setting.
"Cancel" first:
[Cancel] is selected as the default setting.

5-043-036-16(1) Copyright 2022 Sony Corporation

Interchangeable Lens Digital Camera
ILME-FX30

Viewing images on a TV using an HDMI cable

To view images stored on this product using a TV, an HDMI cable (sold separately) and a TV equipped with an HDMI jack are required. For details, refer to the operating instructions supplied with the compatible TV.

1. **Turn off both this product and the TV.**

2. **Connect the HDMI terminal of this product to the HDMI jack of the TV using an HDMI cable (sold separately).**

   Use an HDMI cable that is compatible with the HDMI Type-A terminal of the product and the HDMI jack of the TV.

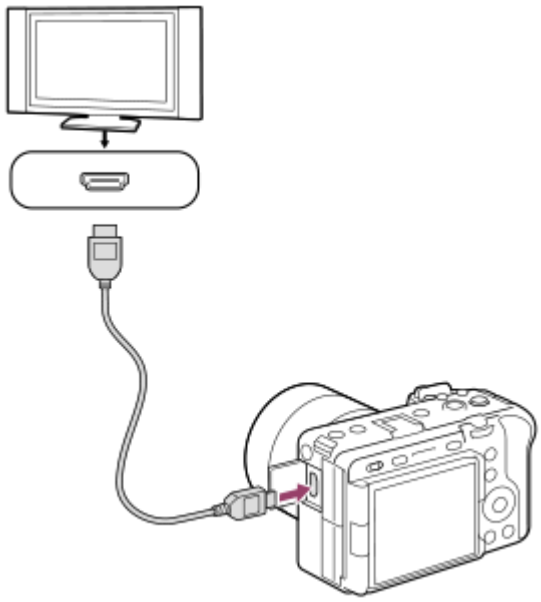

3. **Turn on the TV and switch the input.**

4. **Turn on this product.**

   Images shot with the product appear on the TV screen.

5. **Select an image using the right/left sides of the control wheel.**

   - The monitor of this camera is not lit up on the playback screen.
   - If the playback screen is not displayed, press the ▶ (Playback) button.

Note

- Do not connect this product and another device using the output terminals of both. Doing so may cause a malfunction.
- Some devices may not work properly when connected to this product. For example, they may not output video or audio.
- Use an HDMI cable with the HDMI logo or a genuine Sony cable.
- When [Time Code Output] is set to [On], the image may not be output properly to the TV or recording device. In such cases, set [Time Code Output] to [Off].

- If images do not appear on the TV screen properly, select MENU → (Setup) → [External Output] → [HDMI Resolution] → [2160p], [1080p] or [1080i] according to the TV to be connected.
- During HDMI output, when you switch the movie from 4K to HD image quality or vice-versa, or change the movie to a different frame rate or different color mode, the screen may become dark. This is not a malfunction.
- If the product performs unwanted operations in response to the TV remote control, select MENU → (Setup) → [External Output] → [CTRL FOR HDMI] → [Off].

5-043-036-16(1) Copyright 2022 Sony Corporation

Format

When you use a memory card with this camera for the first time, we recommend that you format the card using the camera for stable performance of the memory card. Note that formatting permanently erases all data on the memory card, and is unrecoverable. Save valuable data on a computer, etc.

1. **MENU → / (Shooting) → [Media] → [Format] → desired memory card slot.**

2. **Select [Enter]. (Quick formatting)**
   - If you press the (Delete) button, a message to perform full formatting will be displayed. You can launch full formatting by selecting [Enter].

The difference between quick formatting and full formatting

Perform full formatting when you feel like the speed of recording to the memory card or read-out from the memory card has become slow, or when you want to erase data completely, etc.
Full formatting takes longer than quick formatting, because all areas of the memory card are initialized.

Hint

- You can also display the screen for formatting the memory card by pressing and holding the MENU button and then the (Delete) button on the shooting screen for approximately two seconds.
- You can cancel full formatting before it is completed. Even if you cancel full formatting in the middle of the process, the data will be erased, so you can use the memory card as is.

Note

- Formatting permanently erases all data including protected images and registered settings (from M1 to M4).
- The access lamp lights up during formatting. Do not remove the memory card while the access lamp is lit up.
- Format the memory card on this camera. If you format the memory card on the computer, the memory card may not be usable depending on the format type.
- It may take a few minutes to complete formatting, depending on the memory card.
- You cannot format the memory card if the remaining battery charge is less than 1%.

Related Topic

- Memory cards that can be used
- Notes on memory card

5-043-036-16(1) Copyright 2022 Sony Corporation

Rec. Media Settings (still image/movie): Recording Media (still image)

Selects the memory card slot to record still images. In the default settings, [Slot 1] is selected. If you want to use one memory card without changing the setting, use Slot 1.

1. **MENU → / (Shooting) → [Media] → [Rec. Media Settings] → [Recording Media] → desired setting.**

Menu item details

Slot 1:
Records still images on the memory card in Slot 1.

Slot 2:
Records still images on the memory card in Slot 2.

Simult. Recording:
Simultaneously records still images on the memory cards in Slot 1 and Slot 2.

Sort Recording:
Records still images with different file formats and image sizes by sorting them to different slots.
Set the file format and image size of still images for each slot.

Related Topic

- Rec. Media Settings (still image/movie): Recording Media (movie)
- Rec. Media Settings (still image/movie): Auto Switch Media
- Selecting which memory card to play back (Select Playback Media)

5-043-036-16(1) Copyright 2022 Sony Corporation

Rec. Media Settings (still image/movie): Recording Media (movie)

Selects the memory card slot to record movies. In the default settings, [Slot 1] is selected. If you want to use one memory card without changing the setting, use Slot 1.

1. **MENU → / (Shooting) → [Media] → [Rec. Media Settings] →[Recording Media] → desired setting.**

Menu item details

Slot 1:
Records movies on the memory card in Slot 1.

Slot 2:
Records movies on the memory card in Slot 2.

Simult. Recording:
Simultaneously records movies on the memory cards in Slot 1 and Slot 2.

Related Topic

- Rec. Media Settings (still image/movie): Recording Media (still image)
- Rec. Media Settings (still image/movie): Auto Switch Media
- Selecting which memory card to play back (Select Playback Media)

5-043-036-16(1) Copyright 2022 Sony Corporation

Rec. Media Settings (still image/movie): Auto Switch Media

If a memory card in use becomes full or you have forgotten to insert a memory card into a slot, you can record images to the other memory card.

1. **MENU → / (Shooting) → [Media] → [Rec. Media Settings] → [Auto Switch Media] → desired setting.**

Menu item details

On:
The camera automatically starts recording on the other memory card when a memory card in use becomes full or if you have forgotten to insert a memory card.

Off:
The camera does not perform [Auto Switch Media].

How the camera switches the memory card slot in use

When recording both still images and movies on a single memory card:
When images cannot be recorded to the memory card in use, the settings for [Recording Media] and [Recording Media] change automatically and images are recorded to the other memory card.
When the other memory card becomes full after switching, the camera starts recording in the former slot again.

Example: When [Recording Media] and [Recording Media] under [Rec. Media Settings] are both set to [Slot 1]

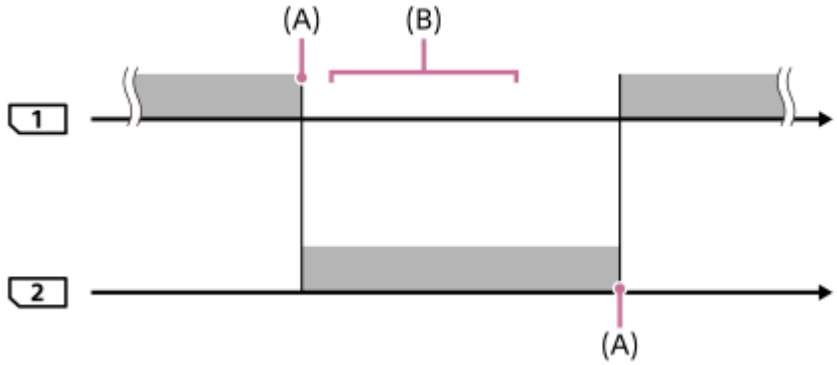

: Recording images
(A): Recording is no longer possible on the memory card (due to lack of capacity, etc.).
(B): The memory card is replaced with a recordable one.

When recording the same image simultaneously to two memory cards:

- [Recording Media] or [Recording Media] under [Rec. Media Settings] is set to [Simult. Recording].

After either of the memory cards becomes full, images are recorded to the other card.
When you replace the full memory card with a recordable memory card, the camera is once again able to simultaneously record images with the selected setting.

Example: [Recording Media] and [Recording Media] are both set to [Simult. Recording]

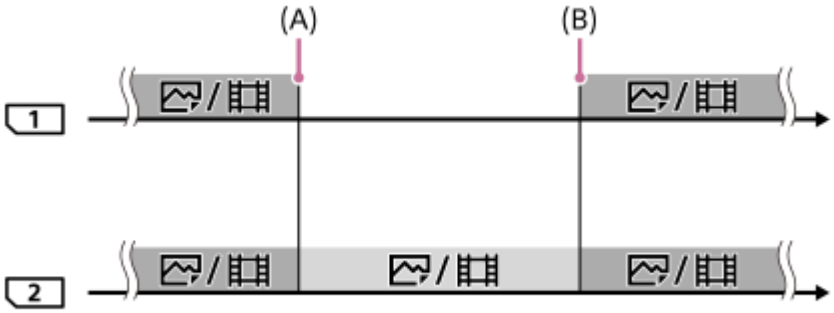

: Simultaneous recording is available.
: The same image cannot be recorded simultaneously.
(A): Recording is no longer possible on the memory card (due to lack of capacity, etc.).
(B): A recordable memory card is inserted.

When recording images separately to two memory cards in the RAW and JPEG/HEIF formats:

- When [Recording Media] under [Rec. Media Settings] is set to [Sort Recording]

When either of the memory cards becomes full, the camera starts recording to the other memory card in both the RAW and JPEG/HEIF formats.
When you replace the full memory card with a recordable memory card, the camera is once again able to record the two types of images separately with the selected setting.

Example: When [File Format] for Slot 1 is set to [RAW] and [File Format] for Slot 2 is set to [JPEG]

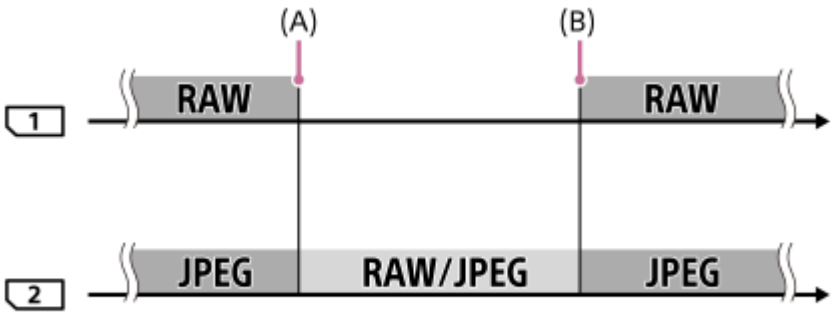

: Images are sorted by the file format.
: Images cannot be sorted.
(A): Recording is no longer possible on the memory card (due to lack of capacity, etc.).
(B): A recordable memory card is inserted.

Hint

- Images are recorded to the memory card in the slot displayed on the monitor with an arrow symbol. After the camera switches the slot using [Auto Switch Media], replace the memory card in the former slot with a recordable memory card.
- When recording both still images and movies on a single memory card, the settings for [Recording Media] and [Recording Media] change automatically as the slot switches. If you want to record on the slot in use before switching, select the desired slot with [Recording Media]/[Recording Media].
- If you want to record with the settings with [Recording Media] and [Recording Media], set [Auto Switch Media] to [Off].

Related Topic

- Memory cards that can be used
- Recordable movie times
- Rec. Media Settings (still image/movie): Recording Media (still image)
- Rec. Media Settings (still image/movie): Recording Media (movie)

5-043-036-16(1) Copyright 2022 Sony Corporation

Interchangeable Lens Digital Camera
ILME-FX30

Recover Image DB (still image/movie)

If image files were processed on a computer, problems may occur in the image database file. In such cases, the images on the memory card will not be played back on this product. Also, if you use a memory card in the camera after using it in another device, the images on the memory card may not be played back correctly. For example, the images may not be displayed as a group. If these problems happen, repair the file using [Recover Image DB].
Images recorded on the memory card are not deleted by [Recover Image DB].

1. **MENU → / (Shooting) → [Media] → [Recover Image DB] → desired memory card slot → [Enter].**

Note

- If the battery pack is extremely depleted, image database files cannot be repaired. Use a sufficiently charged battery pack.

5-043-036-16(1) Copyright 2022 Sony Corporation

Interchangeable Lens Digital Camera
ILME-FX30

Display Media Info. (still image/movie)

Displays the recordable number of still images and the remaining recording time for movies on the memory card.

1. **MENU → / (Shooting) → [Media] → [Display Media Info.] → desired memory card slot.**

5-043-036-16(1) Copyright 2022 Sony Corporation

File/Folder Settings

Configure settings related to the folder and file name of the still image to be shot.

1. **MENU → (Shooting) → [File] → [File/Folder Settings] → desired setting.**

Menu item details

File Number:

You can set how to assign file numbers to still images.

[Series]: Does not reset file numbers for each folder.

[Reset]: Resets file numbers for each folder.

Set File Name:

You can specify the first three characters of the file name.

Folder Name:

You can set how folder names are assigned.

[Standard Form]: Folders are named as “folder number + any 5 characters”. Example: 100MSDCF

[Date Form]: Folders are named as “folder number + Y (the last digit of the year)/MM/DD”.
Example: 10020405 (Folder number: 100; date: 04/05/2022)

Hint

- The settings for [File Number] and [Set File Name] are applied to both Slot 1 and Slot 2.
- When [File Number] is set to [Series], file numbers will be assigned sequentially across the memory cards in the slots even if you switch the setting for [Rec. Media Settings] → [Recording Media] between Slot 1 and 2.
- When [Folder Name] is set to [Standard Form], the last 5 characters of the folder name can be set using [Create New Folder]. (Only uppercase letters, numbers, and underscores can be entered.)

Note

- Only capital letters, numbers, and underscores can be used for [Set File Name]. Underscores cannot be used for the first character.
- The three characters specified using [Set File Name] are only applied to files recorded after the setting is made.

Related Topic

- Create New Folder
- File Settings

5-043-036-16(1) Copyright 2022 Sony Corporation

Select REC Folder

If [Folder Name] under [File/Folder Settings] is set to [Standard Form] and there are 2 folders or more, you can select the folder on the memory card to which images are to be recorded.

1. **MENU → (Shooting) → [File] → [Select REC Folder] → desired folder.**

Note

- You cannot select the folder when [Folder Name] under [File/Folder Settings] is set to [Date Form].
- If the camera is set to record images to memory cards in both slots, you may only select a common folder on both memory cards. If there is no common folder, you can make one using [Create New Folder].

Related Topic

- File/Folder Settings
- Create New Folder

5-043-036-16(1) Copyright 2022 Sony Corporation

Create New Folder

Creates a new folder on the memory card for recording still images. A new folder is created with a folder number one greater than the largest folder number currently used. Images are recorded in the newly created folder.
Up to 4 000 images in total can be stored in one folder. When the folder capacity is exceeded, a new folder may be automatically created.

1. **MENU → (Shooting) → [File] → [Create New Folder].**

Hint

- The name of the folder that is created will vary depending on the [Folder Name] setting.
  [Standard Form]: In the folder name “Folder number + any 5 characters”, +1 will be added to the folder number.
  Example: 100MSDCF → 101MSDCF
  [Date Form]: In the folder name “Folder number + year/month/day (last digit of the year and 4 digits representing the month/day)”, +1 will be added to the folder number.
  Example: 10040405 → 10140405
- When [Folder Name] is set to [Standard Form], the last 5 characters of the folder name can be set using [Create New Folder]. (Only uppercase letters, numbers, and underscores can be entered.)
- You can also set the last 5 characters of the folder name by using [Forced File Number Reset].

Note

- When you insert a memory card that was used with other equipment into this product and shoot images, a new folder may be automatically created.
- If the camera is set to record images to memory cards in both slots, a new folder will be created on both memory cards. A new folder number will be one greater than the largest existing folder number on the two memory cards.
- If the camera is set to record images to memory cards in both slots and an image is shot, a new folder may be automatically created.
- You cannot change the folder name when [Folder Name] under [File/Folder Settings] is set to [Date Form].

Related Topic

- File/Folder Settings

5-043-036-16(1) Copyright 2022 Sony Corporation

File Settings

Configure settings for the file names of recorded movies.

1 **MENU → (Shooting) → [File] → [File Settings] → desired setting item.**

Menu item details

File Number:
You can set how to assign file numbers to movies.

[Series]: Does not reset file numbers even if the memory card is changed.

[Reset]: Resets the file number when the memory card is changed.

Series Counter Reset:
Resets the series counter used when [File Number] is set to [Series].

File Name Format:
You can set the format for movie file names. You can change the beginning of the file name to your desired character string or set the file name to the [Cam ID + Reel#] format.

[Standard]: The file name of the recorded movie starts with “C.” Example: C0001

[Cam ID + Reel#]*: The file name of the recorded movie becomes “Camera ID+Reel number+Camera position+File number+Date+Random string.” Example: A001C001_230101AB

[Title]: The file name of the recorded movie becomes “Title+File number.”
[Date + Title]: The file name of the recorded movie becomes “Date+Title+File number.”
[Title + Date]: The file name of the recorded movie becomes “Title+Date+ File number.”

Cam ID + Reel# Settings*:
Sets the various parts of the file name when [File Name Format] is set to [Cam ID + Reel#].

[Camera ID]: The ID of the camera for shooting (A to Z)

[Reel Number]: The reel number of the movie (001-999)

[Camera Position]: The camera position when shooting (C/L/R). When the file number reaches 999, the recorded camera position changes, but the setting value (C/L/R) does not change. Example: C999→D001

Title Name Settings:
You can set the title when [File Name Format] is set to [Title], [Date + Title], or [Title + Date].

* When the camera's system software (firmware) is Ver.2.00 or later

Hint

- The settings for [File Number] and [File Name Format] are applied to both Slot 1 and Slot 2.
- When [File Number] is set to [Series], file numbers will be assigned sequentially across the memory cards in the slots even if you switch the setting for [Rec. Media Settings] → [Recording Media] between Slot 1 and 2.

Note

- When entering [Title Name Settings], the number/types of characters that can be entered are as follows.
  The maximum length is 37 characters. The types of characters that can be entered are letters of the alphabet, numbers, and symbols (. - _ @ ! # $ % + = ^ ~ ( ) , ; [ ]).
- Titles specified using [Title Name Settings] or [Cam ID + Reel# Settings] are only applied to movies recorded after the setting is made.
- [Reel Number] is reset when the [Camera ID] setting has changed. [Reel Number] will not be reset even if you execute [Reset] under [File Number].

- You cannot set how folder names are assigned for movies.
- If you are using an SDHC memory card, [File Name Format] is locked to [Standard].
- If you insert a memory card used with [File Name Format] set to one of the following into another device, the memory card may not function properly.
  - [Cam ID + Reel#]
  - [Title]
  - [Date + Title]
  - [Title + Date]
- If there are unused numbers due to file deletion, etc., these numbers will be reused when the movie file number reaches “9999.”
- When you set [File Name Format] to [Cam ID + Reel#], use a CFexpress Type A memory card or SDXC memory card.

Related Topic

- File/Folder Settings
- Display File Name (movie)

5-043-036-16(1) Copyright 2022 Sony Corporation

Display File Name (movie)

Sets whether to display the file name of the movie while shooting. The file name of a movie to be shot will be displayed in the shooting standby mode.
This function can be used when the camera's system software (firmware) is Ver.2.00 or later.

1. **MENU → (Setup) → [Display Option] → [Display File Name] → desired setting.**

Menu item details

On:
Displays the file name on the movie recording screen.

Off:
Does not display the file name on the movie recording screen.

Related Topic

- File Settings

5-043-036-16(1) Copyright 2022 Sony Corporation

IPTC Information

You can write IPTC information* when recording still images. Create and edit IPTC information using the IPTC Metadata Preset (https://www.sony.net/iptc/help/) and write the information to a memory card beforehand.

* IPTC information consists of digital image metadata attributes, as standardized by the International Press Telecommunications Council.

1. **MENU → (Shooting) → [File] → [IPTC Information] → desired setting item.**

Menu item details

Write IPTC Info:
Sets whether to write IPTC information to still images. ([On]/[Off])

- If you select [On], the IPTC (IPTC) icon will appear on the shooting screen.

Register IPTC Info :
Registers IPTC information from a memory card to the camera. Select [Slot 1] or [Slot 2] as the memory card from which to read out IPTC information.

Hint

- When you play back images that have IPTC information, the IPTC (IPTC) icon appears on the screen.
- For details on how to use the IPTC Metadata Preset, refer to the following support page.
  https://www.sony.net/iptc/help/

Note

- Whenever you register IPTC information, information previously registered to the camera is overwritten.
- You cannot edit or check IPTC information on the camera.
- To delete IPTC information registered to the camera, reset the camera to the initial settings.
- Before lending out or handing over the camera, reset the camera to delete IPTC information.

Related Topic

- Setting Reset

5-043-036-16(1) Copyright 2022 Sony Corporation

Copyright Info

Writes copyright information onto the still images.

1. **MENU → (Shooting) → [File] → [Copyright Info] → desired setting.**

2. **When you select [Set Photographer] or [Set Copyright], a keyboard appears on the screen. Enter your desired name.**

   You can only enter alphanumeric characters and symbols for [Set Photographer] and [Set Copyright]. You can enter up to 46 letters.

Menu item details

Write Copyright Info:
Sets whether to write copyright information. ([On]/[Off])

- If you select [On], a © (Copyright) icon will appear on the shooting screen.

Set Photographer:
Sets the photographer name.

Set Copyright:
Sets the copyright holder name.

Disp. Copyright Info:
Displays the current copyright information.

Note

- A © (Copyright) icon appears during the playback of images with copyright information.
- When entering [Set Photographer] and [Set Copyright], the numbers/types of characters that can be entered are as follows. The maximum length is 46 characters. The types of characters that can be entered are letters of the alphabet, numbers, and symbols.
- In order to prevent unauthorized use of [Copyright Info], be sure to clear the [Set Photographer] and [Set Copyright] columns before lending out or handing over your camera.
- Sony is not liable for problems or damages resulting from use of [Copyright Info].

Related Topic

- Using the keyboard

5-043-036-16(1) Copyright 2022 Sony Corporation

Interchangeable Lens Digital Camera
ILME-FX30

Write Serial Number (still image/movie)

Writes the camera's serial number when shooting.

1. **MENU → / (Shooting) → [File] → [Write Serial Number] → desired setting.**

Menu item details

On:
Writes the camera's serial number to the image.
Off:
Does not write the camera's serial number to the image.

5-043-036-16(1) Copyright 2022 Sony Corporation

Wi-Fi Connect

Sets whether to use the Wi-Fi function of the camera.
This function can be used when the camera's system software (firmware) is Ver.3.00 or later.

1. **MENU → (Network) → [Wi-Fi] → [Wi-Fi Connect] → desired setting.**
   - Set this function to [On] to search for connectable access points.

Menu item details

On:
Uses the Wi-Fi function.

Off:
Does not use the Wi-Fi function.

Note

- The wireless access point or wireless router that relays the LAN connection is referred to as the "access point" in this manual.
- This camera can connect to an access point with WPA3-SAE or WPA2-PSK security settings or without security settings. To ensure a secure wireless LAN connection, we strongly recommend using an access point with WPA3 or WPA2 security settings.
- Connecting to an access point without security settings may result in hacking, access from malicious third parties, or attacks on vulnerabilities. Unless there is a specific reason, we do not recommend using an access point without security settings.
- It is important that you set the security settings when using a wireless LAN. If a security problem arises because no security precautions are in place or due to any inevitable circumstances when using a wireless LAN, Sony bears no responsibility for the loss or damage.

Related Topic

- WPS Push
- Access Point Set.

5-043-036-16(1) Copyright 2022 Sony Corporation

WPS Push

If your access point has a Wi-Fi Protected Setup (WPS) button, you can register the access point to this product easily. For details about the available functions and settings of your access point, see the access point operating instructions or contact the administrator of the access point.
Set [Wi-Fi Connect] to [On] in advance.

1. **MENU → (Network) → [Wi-Fi] → [WPS Push].**
2. **Push the Wi-Fi Protected Setup (WPS) button on the access point to connect.**

Note

- [WPS Push] works only if the security setting of your access point is set to WPA* or WPA2 and your access point supports the Wi-Fi Protected Setup (WPS) button method. If the security setting is WEP* or WPA3 only or your access point does not support the Wi-Fi Protected Setup (WPS) button method, perform [Access Point Set.].
  * If the camera's system software (firmware) is Ver.6.00 or later, wireless connections using WEP or WPA are not supported.
- To ensure a secure wireless LAN connection, we strongly recommend using an access point with WPA3 or WPA2 security settings.
- Connecting to an access point without security settings may result in hacking, access from malicious third parties, or attacks on vulnerabilities. Unless there is a specific reason, we do not recommend using an access point without security settings.
- It is important that you set the security settings when using a wireless LAN. If a security problem arises because no security precautions are in place or due to any inevitable circumstances when using a wireless LAN, Sony bears no responsibility for the loss or damage.
- A connection may not be possible or the communication distance may be shorter depending on the surrounding conditions, such as the type of wall material and the presence of obstructions or radio waves between the product and access point. In this case, change the location of the product or move the product closer to the access point.

Related Topic

- Access Point Set.

5-043-036-16(1) Copyright 2022 Sony Corporation

Access Point Set.

You can register your access point manually. Before starting the procedure, check the SSID name of the access point, security system, and password. The password may be preset in some devices. For details, see the access point operating instructions, or consult the access point administrator.
Set [Wi-Fi Connect] to [On] in advance.

1. **MENU → (Network) → [Wi-Fi] → [Access Point Set.].**

2. **Select the access point you want to register.**

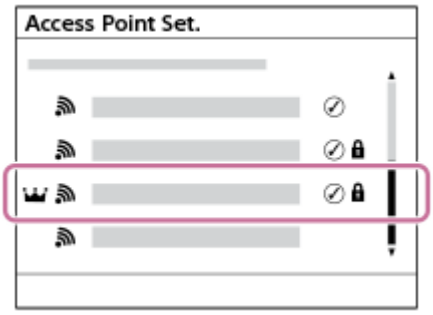

When the desired access point is displayed on the screen: Select the desired access point.
When the desired access point is not displayed on the screen: Select [Manual Setting] and set the access point.*

- If you select [Manual Registration], input the SSID name of the access point, then select the security system. The default security method is [WPA2].
- If you select [WPS PIN], you can register the access point by entering the PIN code displayed on the camera into the connected device.

* If the camera's system software (firmware) is Ver.6.00 or later, wireless connections using WEP or WPA are not supported.

3. **Input the password, and select [OK].**

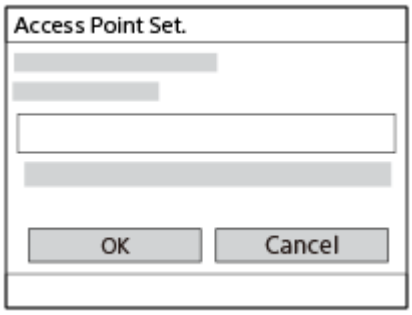

- Access points without (Lock mark) do not require a password.
- Note that unmasking your password risks revealing your password to a third party. Make sure that no one is around before unmasking.

4. **Select [OK].**

Other setting items

Depending on the status or the setting method of your access point, you may want to set more items.
For an unregistered access point, select the [Detail] button on the password entry screen.
For a registered access point, press the right side of the control wheel on the access point selection screen.

Priority Connection:
Select [On] or [Off].

IP Address Setting:
Select [Auto] or [Manual].

IP Address:
If you are entering the IP address manually, enter the set address.

Subnet Mask/Default Gateway/Primary DNS Server/Second DNS Server:
If you have set [IP Address Setting] to [Manual], enter each address according to your network environment.

Hint

- When you select a registered access point, [Priority Connection] for that access point becomes set to [On], prioritizing connections to that access point.
- The prioritized access point is marked with a (crown) icon.

Note

- When manually setting an access point or IP address, the number and types of characters that can be entered are as follows.
  - SSID : The maximum length is 32 characters. The types of characters that can be entered are letters of the alphabet (both uppercase and lowercase), numbers, and symbols.
  - Password : The length must be between 8 and 64 characters. The types of characters that can be entered are letters of the alphabet (both uppercase and lowercase), numbers, and symbols.
  - IP Address / Subnet Mask / Default Gateway / Primary DNS Server / Second DNS Server: The maximum length is 15 characters. The types of characters that can be entered are numbers and “.” only.
- Once an access point is registered, [Priority Connection] for that access point is set to [On]. If you want to stop preferentially connecting to a certain access point, set [Priority Connection] for the access point to [Off].
- If there are both 2.4 GHz and 5 GHz access points with the same SSID and encryption format, the access point with the stronger radio field will be displayed.

Related Topic

- WPS Push
- Using the keyboard

5-043-036-16(1) Copyright 2022 Sony Corporation

Interchangeable Lens Digital Camera
ILME-FX30

Wi-Fi Frequency Band (models supporting 5 GHz)

Sets the frequency band for Wi-Fi communications. [5GHz] has faster communication speeds and more stable data transfers than [2.4GHz].
The [Wi-Fi Frequency Band] setting applies to a Wi-Fi Direct connection with a smartphone or computer, which is a direct connection to the camera not via an access point.

1. **MENU → (Network) → [Wi-Fi] → [Wi-Fi Frequency Band] → desired setting.**

Menu item details

2.4GHz/5GHz

5-043-036-16(1) Copyright 2022 Sony Corporation

Display Wi-Fi Info.

Displays Wi-Fi information for the camera such as the MAC address, IP address, etc.

1. **MENU → (Network) → [Wi-Fi] → [Display Wi-Fi Info.].**

Hint

- Information other than the MAC address is displayed when [Wi-Fi Connect] is set to [On].

5-043-036-16(1) Copyright 2022 Sony Corporation

SSID/PW Reset

This product shares connection information with devices that have permission to connect when establishing a Wi-Fi Direct connection with a smartphone or a computer. If you want to change which devices have permission to connect, reset the connection information.

1. **MENU → (Network) → [Wi-Fi] → [SSID/PW Reset] → [OK].**

Note

- If you connect this product to a smartphone after resetting the connection information, you must make the settings for the smartphone again.
- If you connect this product to a computer with Wi-Fi Direct after resetting the connection information, you must reconfigure the settings of the computer.

Related Topic

- Operating the camera from a computer (Remote Shoot Function)

5-043-036-16(1) Copyright 2022 Sony Corporation

Bluetooth Settings

Controls the settings for connecting the camera to a smartphone or Bluetooth remote commander or shooting grip via a Bluetooth connection.

1. **MENU → (Network) → [Bluetooth] → Select a menu item and set the desired parameter.**

Menu item details

Bluetooth Function:
Sets whether to activate or not the Bluetooth function of the camera. ([On]/[Off])

Pairing:
Displays the screen for pairing the camera and smartphone or Bluetooth remote commander.

Manage Paired Device:
Enables you to check or delete the pairing information for devices paired with the camera.

Bluetooth Rmt Ctrl:
Sets whether or not to use a Bluetooth compatible remote commander (sold separately). ([On]/[Off])

Disp Device Address:
Displays the BD address of the camera.

Note

- When establishing a Bluetooth connection, only pair with trusted devices. Avoid unsolicited pairing requests or connections to unknown devices.
- Turn off the Bluetooth function when not in use.
- Check your paired devices regularly and delete any unnecessary ones.
- After you delete the pairing information for the camera from your smartphone, delete pairing information for the smartphone from the camera using [Manage Paired Device].

Related Topic

- Bluetooth Rmt Ctrl
- Cnct. while Power OFF (smartphone)
- Pairing the camera with a smartphone (Smartphone Connection)

5-043-036-16(1) Copyright 2022 Sony Corporation

Interchangeable Lens Digital Camera
ILME-FX30

Bluetooth Rmt Ctrl

You can operate the camera using a Bluetooth compatible remote commander (sold separately) or shooting grip (sold separately).

1. **On the camera, select MENU → (Network) → [Bluetooth] → [Bluetooth Function] → [On].**
2. **On the camera, select MENU → (Network) → [Bluetooth] → [Bluetooth Rmt Ctrl] → [On].**
   - If there is no Bluetooth device currently paired with the camera, the screen for pairing as described in Step 3 will appear.
3. **On the camera, select MENU → (Network) → [Bluetooth] → [Pairing] to display the screen for pairing.**
4. **On the Bluetooth remote commander, perform pairing.**
   - For details, refer to the instruction manual for the Bluetooth remote commander.
5. **On the camera, select [OK] on the confirmation screen for the Bluetooth connection.**
   - Pairing is complete, and you can now operate the camera from the Bluetooth remote commander. After pairing the device once, you can connect the camera and the Bluetooth remote commander again in the future by setting [Bluetooth Rmt Ctrl] to [On].

Menu item details

On:
Enables Bluetooth remote commander operation.
Off:
Disables Bluetooth remote commander operation.

Icons displayed when connecting to a Bluetooth remote commander

(Bluetooth connection available): Bluetooth connection with the Bluetooth remote commander is established.
(Bluetooth connection unavailable): Bluetooth connection with the Bluetooth remote commander is not established.

Hint

- The Bluetooth connection is only active while you are operating the camera using the Bluetooth remote commander.

Note

- When you initialize the camera, the pairing information is also deleted. To use the Bluetooth remote commander, perform pairing again.
- If the Bluetooth connection is unstable, remove any obstacles, such as people or metal objects from between the camera and the paired Bluetooth remote commander.
- The following functions cannot be used when [Bluetooth Rmt Ctrl] is set to [On].

- Power-saving mode

- Only one Bluetooth remote commander can be connected to the camera at a time.
- If the function does not work properly, check the following notes and then try pairing again.
  - Confirm that [Airplane Mode] for the camera is set to [Off].
  - If the function does not work properly even after you have performed the above operations, delete the pairing information for the device that you want to connect using [Manage Paired Device] on the camera.
- When establishing a Bluetooth connection, only pair with trusted devices. Avoid unsolicited pairing requests or connections to unknown devices.
- Turn off the Bluetooth function when not in use.
- Check your paired devices regularly and delete any unnecessary ones.
- After you delete the pairing information for the camera from your smartphone, delete pairing information for the smartphone from the camera using [Manage Paired Device].

Related Topic

- Bluetooth Settings

5-043-036-16(1) Copyright 2022 Sony Corporation

Wired LAN (USB-LAN)

Configures a wired LAN. You can connect this product to a network via wired LAN by connecting a commercially available USB-LAN conversion adaptor to the USB Type-C terminal on the product.

1. **MENU → (Network) → [Wired LAN] → desired setting.**

Menu item details

LAN IP Address Setting:
Sets whether to configure the IP address for the wired LAN automatically or manually. ([Auto]/[Manual])

Display Wired LAN Info.:
Displays wired LAN information for this product such as the MAC address or IP address.

IP Address:
If you are entering the IP address manually, enter the fixed address.

Subnet Mask/Default Gateway/Primary DNS Server/Second DNS Server:
If you have set [LAN IP Address Setting] to [Manual], enter each address according to your network environment.

Hint

- We recommend that you use a gigabit ethernet adaptor for USB Type-C connections.

Note

- When connecting via a wired LAN, use a trusted network. We do not recommend using public networks that are not secure or networks with unknown origins.
- When using a network other than a trusted one, there is a risk of DoS (Denial of Service) attacks and loss of functionality. If you notice anything unusual, immediately disconnect the camera from the network.
- When entering an IP address in [LAN IP Address Setting], the number/types of characters that can be entered are as follows.
  - IP Address / Subnet Mask / Default Gateway / Primary DNS Server / Second DNS Server: The maximum length is 15 characters. The types of characters that can be entered are numbers and “.” only.
- Not all types of USB-LAN conversion adaptors are guaranteed to operate properly.

Related Topic

- Using the keyboard

5-043-036-16(1) Copyright 2022 Sony Corporation

USB-LAN/Tethering

Connects to the network by connecting a USB-LAN conversion adaptor to the camera or uses a tethering connection on your smartphone to connect to the network.
This function can be used when the camera's system software (firmware) is Ver.3.00 or later.

1. **MENU → (Network) → [USB-LAN/Tethering] → desired connection method.**
   - To disconnect from the network, select [USB-LAN Disconnection] or [Tethering Disconnection].

Menu item details

USB-LAN Connection:
Connects to the network using a USB-LAN conversion adaptor.

Tethering Connection:
Connects to the network using your smartphone's tethering connection.

USB-LAN Cnct. Launch *
Sets whether to automatically recognize a USB-LAN conversion adaptor and connect to the network when the camera is turned on. ([On] / [Off])

* When the camera's system software (firmware) is Ver.6.00 or later.

Note

- If you connect a USB-LAN conversion adaptor to the USB Type-C terminal on the camera and another USB device to the Multi/Micro USB Terminal, communication cannot occur through both terminals at the same time. As a result, automatic connection may fail even if [USB-LAN Cnct. Launch] is set to [On].
- When connecting via USB-LAN, use a trusted network. We do not recommend using public networks that are not secure or networks with unknown origins.
- When using a network other than a trusted one, there is a risk of DoS (Denial of Service) attacks and loss of functionality. If you notice anything unusual, immediately disconnect the camera from the network.
- Only use trusted smartphones for tethering. We do not recommend connecting to devices of unknown origin that are not secure.

Related Topic

- Wired LAN (USB-LAN)

5-043-036-16(1) Copyright 2022 Sony Corporation

Airplane Mode

When you board an airplane, etc., you can temporarily disable all the wireless-related functions including Wi-Fi.

1. **MENU → (Network) → [Network Option] → [Airplane Mode] → desired setting.**

   If you set [Airplane Mode] to [On], an airplane mark will be displayed on the screen.

5-043-036-16(1) Copyright 2022 Sony Corporation

Edit Device Name

You can change the device name for Wi-Fi Direct, [Remote Shooting], or Bluetooth connections.

1. **MENU → (Network) → [Network Option] → [Edit Device Name].**
2. **Select the input box, then input the device name → [OK].**

Note

- When entering the device name, the number/types of characters that can be entered are as follows.
  The maximum length is 20 characters. The types of characters that can be entered are letters of the alphabet (both uppercase and lowercase), numbers, and symbols.

Related Topic

- WPS Push
- Access Point Set.
- Operating the camera from a computer (Remote Shoot Function)
- Using the keyboard

5-043-036-16(1) Copyright 2022 Sony Corporation

Importing root certification to the camera (Import Root Certificate)

Imports a root certificate needed to verify a server from a memory card.
The root certificate is used when executing encrypted communication during FTP transfers and network streaming, etc.
The root certificate is saved to the camera and can be updated.

1. **Save a root certificate to a memory card.**
   - Save the certificate to the root directory of the memory card. Name the file as follows according to the function you will use.
     - [FTP Function]: cacert.pem (PEM format)
     - [Streaming]: RTMPcert.pem (PEM format)
     - [Cloud Connection and other functions]: sonycert
2. **Insert the memory card to which the root certificate has been saved into Slot 1 on the camera.**
3. **MENU → (Network) → [Network Option] → [Import Root Certificate] → Select a function that uses the root certificate, and then select [OK].**
   - The root certificate saved to the memory card is read by the camera, and then the root certificate on the camera is updated.

Menu item details

FTP Function:
Reads a root certificate to verify the FTP server.

Streaming [*1]:
Reads a root certificate to verify the distribution server for network streaming.

Cloud Connection and other functions [*1] [*2]:
Reads a root certificate to verify the server for the cloud connection or other functions.

- Sony will provide “sonycert” used for [Cloud Connection and other functions] as needed. The certificate used in this function is encrypted, so normal PEM-format certificates cannot be read.

*1 When the camera’s system software (firmware) version is Ver.5.00 or later
*2 The cloud connection may only be available in certain countries and regions.

Note

- Do not remove the memory card from the camera during read operations.
- When the network settings are reset, the root certificate on the camera is reset as well.
- The maximum size of a root certificate that can be loaded is 1 MB per certificate.

5-043-036-16(1) Copyright 2022 Sony Corporation

Access Authen. Settings

Encrypts communications between the camera and device during remote shooting or image transfer.
This function can be used when the camera's system software (firmware) is Ver.2.00 or later.

1. **MENU → (Network) → [Network Option] → [Access Authen. Settings] → desired setting item.**

Menu item details

Access Authen.:
Sets whether to encrypt communication with access authentication. ([On] / [Off])

User:
Sets the username for access authentication.

Password:
Sets the password for access authentication.

Generate Password:
Automatically generates a password for access authentication.

Note

- When [Access Authen.] is set to [Off], communication is performed without SSH connection authentication or encryption, so the content may be intercepted, or the camera may be accessed by an unintended third party.
  If unauthorized access is detected, the camera may stop accepting communication. In such cases, reconnect from the beginning.
- Before connecting the camera to a smartphone or computer, make sure that [Access Authen.] is not unintentionally set to [Off].
- The username and password for [Access Authen. Settings] are automatically generated and set when the camera is purchased. When setting your own username and password, be careful not to be intercepted by others.
- For the password in [Access Authen. Settings], set a character string that is long enough that it is difficult for others to guess, and keep it securely.
- If you unmask your password when entering it, there is a risk that it will be revealed to a third party. Make sure that no one is around before unmasking.
- Initialize the camera before lending or giving it to others.
- The numbers/types of characters that can be entered for the following items are as follows.
  - [User]: The maximum length is 16 characters. The types of characters that can be entered are letters of the alphabet (both uppercase and lowercase), numbers, and symbols (! % . = _).
  - [Password]: The number must be between 8 and 16 characters. The types of characters that can be entered are letters of the alphabet (both uppercase and lowercase), numbers, and symbols (! % . = _ - + ,).

Related Topic

- Access Authen. Info
- Using the keyboard

5-043-036-16(1) Copyright 2022 Sony Corporation

Access Authen. Info

Displays the information required when connecting the camera to a computer or smartphone using access authentication.
This function can be used when the camera's system software (firmware) is Ver.2.00 or later.

1. **MENU → (Network) → [Network Option] → [Access Authen. Info].**

   The information required to connect such as the username, password, MAC address, and fingerprint of this camera are displayed.

Note

- When displaying [Access Authen. Info] on the screen, make sure that no one is around to avoid the information on the screen being seen by others and to prevent unauthorized use of usernames, passwords, and fingerprints.
- Initialize the camera before lending or giving it to others.

Related Topic

- Access Authen. Settings

5-043-036-16(1) Copyright 2022 Sony Corporation

Security(IPsec)

Encrypts data when the camera and a computer communicate via a wired LAN or Wi-Fi connection.
This function cannot be used when the camera's system software (firmware) is Ver.6.00 or later.
For secure communication, set [Access Authen. Settings] to [On].

1. **MENU → (Network) → [Network Option] → [Security(IPsec)] → desired setting.**

Menu item details

IPsec:
Sets whether or not the [Security(IPsec)] function is used. ([On]/[Off])

Dest. IP Address:
Sets the IP address of the device to connect using the [Security(IPsec)] function.

Shared Key:
Sets the shared key used by the [Security(IPsec)] function.

Note

- Use at least eight and no more than 20 alphanumeric characters or symbols for [Shared Key].
- When you enter the shared key, note that unmasking the shared key risks revealing it to a third party. Make sure that no one is around before unmasking.
- For IPsec communications, the device to connect must be compatible with IPsec.
  Depending on the device, communications may not be possible or the communication speed may be slow.
- On this camera, IPsec operates in transport mode only and uses IKEv2.
  The algorithms are AES with 128-bit keys in CBC mode/Diffie-Hellman 3072-bit modp group/PRF-HMAC-SHA-256/HMAC-SHA-384-192.
  The authentication expires after 24 hours.
- Encrypted communications can only be made with devices that are configured correctly. Communications with other devices are not encrypted.
- For details on the IPsec configuration, consult the administrator of the network for your device.
- The [Security(IPsec)] function cannot be used when [Access Authen.] under [Access Authen. Settings] is set to [On].
- The initial value of [Shared Key] is blank. Set a string of 8 to 20 alphanumeric characters/symbols. We recommend that you use 16 or more random characters for [Shared Key] to prevent it from being analyzed by third parties and that you change it regularly. Some symbols cannot be entered because they are not available.
- When entering [Dest. IP Address], the maximum length is 46 characters, and the types of characters that can be entered are numbers and "." only.

Related Topic

- Using the keyboard

5-043-036-16(1) Copyright 2022 Sony Corporation

Wi-Fi Direct Settings

Changes the Wi-Fi Direct setting to improve connection compatibility.
This function can be used when the camera's system software (firmware) is Ver.5.00 or later.

1. **MENU → (Network) → [Network Option] → [Wi-Fi Direct Settings] → desired setting.**

Menu item details

Type1 (Standard):
Connects via Wi-Fi Direct in a standard format.
It is recommended that you normally set [Wi-Fi Direct Settings] to [Type1 (Standard)].

Type2:
Set to [Type2] only if you cannot connect via Wi-Fi Direct with the [Type1 (Standard)] setting.
This may improve the Wi-Fi Direct connection.

Note

- If you change the setting when the Wi-Fi connection is normal, it may affect connections with external devices.

5-043-036-16(1) Copyright 2022 Sony Corporation

Reset Network Set.

Resets all the network settings to default settings.

1. **MENU → (Network) → [Network Option] → [Reset Network Set.] → [Enter].**

5-043-036-16(1) Copyright 2022 Sony Corporation

FTP Transfer Func.

You can set up image transferring using an FTP server or transfer images to the FTP server. Basic knowledge of FTP servers is required.
For details, refer to the “FTP Help Guide.”
https://rd1.sony.net/help/di/ftp_2220/h_zz/

1. **MENU → (Network) → [FTP Transfer] → [FTP Transfer Func.] → desired setting.**

Related Topic

- Importing root certification to the camera (Import Root Certificate)

5-043-036-16(1) Copyright 2022 Sony Corporation

Monitor Brightness

Adjust the brightness of the screen.

1. **MENU → (Setup) → [Monitor] → [Monitor Brightness] → desired setting.**

Menu item details

Manual:
Adjusts the brightness within the range of –2 to +2.

Sunny Weather:
Sets the brightness appropriately for shooting outdoors.

Note

- The [Sunny Weather] setting is too bright for shooting indoors. Set [Monitor Brightness] to [Manual] for indoor shooting.

5-043-036-16(1) Copyright 2022 Sony Corporation

Power Save Start Time

Sets the amount of time that the camera will wait before going into the power save mode if it is not in use (except when powered from a computer or smartphone). You can resume shooting by pressing the shutter button halfway down or performing other operations.

1. **MENU → (Setup) → [Power Setting Option] → [Power Save Start Time] → desired setting.**

Menu item details

Off/30 Min/5 Min/2 Min/1 Min/10 Sec

Note

- Turn off the product when you do not use it for a long time.
- When [Power Save Start Time] is set to [Off] or [30 Min], power consumption becomes higher than usual.
- The power save function is deactivated in the following situations:
  - When powered via USB from a computer or other device
  - While playing back slideshows
  - During FTP transfer
  - While recording movies
  - While connected to a computer or TV
  - When [Bluetooth Rmt Ctrl] is set to [On]
  - While streaming
  - While uploading images to Creators' Cloud

5-043-036-16(1) Copyright 2022 Sony Corporation

Auto Power OFF Temp.

Sets the temperature of the camera at which the camera turns off automatically during shooting. When it is set to [High], you can continue shooting even when the temperature of the camera gets hotter than normal.

1. **MENU → (Setup) → [Power Setting Option] → [Auto Power OFF Temp.] → desired setting.**

Menu item details

Standard:
Sets the standard temperature for the camera to turn off.

High:
Sets the temperature at which the camera turns off to higher than [Standard].

Notes when [Auto Power OFF Temp.] is set to [High]

- Do not shoot while holding the camera in your hand. Use a tripod.
- Using the camera while holding it in your hand for a long period of time may cause low-temperature burns.

Continuous recording time for movies when [Auto Power OFF Temp.] is set to [High]

The duration of time available for continuous movie recording is as follows when the camera starts recording with the default settings after the power has been turned off for a while. The following values indicate the continuous time from when the camera starts recording until the camera stops recording.

Ambient temperature: 25°C (77°F)
Continuous recording time for movies (HD): Approx. 120 minutes

Continuous recording time for movies (4K): Approx. 60 minutes

Ambient temperature: 40°C (104°F)
Continuous recording time for movies (HD): Approx. 120 minutes

Continuous recording time for movies (4K): Approx. 60 minutes

HD: XAVC S HD (59.94p 50M/50p 50M 4:2:0 8bit; when the camera is not connected via Wi-Fi; when using a CFexpress Type A memory card; when the monitor is open)
4K: XAVC S 4K (59.94p 150M/50p 150M 4:2:0 8bit; when the camera is not connected via Wi-Fi; when using a CFexpress Type A memory card; when the monitor is open)

Note

- Even if [Auto Power OFF Temp.] is set to [High], depending on the conditions or the temperature of the camera, the recordable time for movies may not change.

Related Topic

- Recordable movie times

5-043-036-16(1) Copyright 2022 Sony Corporation

Fan Control (movie)

Sets the control method for the cooling fan, which keeps the temperature of the camera from rising.

1. **MENU → (Setup) → [Setup Option] → [Fan Control] → desired setting.**

Menu item details

Auto:
Operates the cooling fan automatically based on the internal temperature of the camera.

Minimum:
Operates the cooling fan while suppressing operating sounds, unless the internal temperature of the camera exceeds a certain temperature.

Off in Rec:
Does not operate the cooling fan while recording movies, unless the internal temperature of the camera exceeds a certain temperature. The fan rotates at the maximum speed when not recording.

5-043-036-16(1) Copyright 2022 Sony Corporation

Display Quality

You can change the display quality.

1. **MENU → (Setup) → [Monitor] → [Display Quality] → desired setting.**

Menu item details

High:
Displays in high quality.

Standard:
Displays in standard quality.

Note

- When [High] is set, battery consumption will be higher than when [Standard] is set.
- When the temperature of the camera rises, the setting may become locked to [Standard].

5-043-036-16(1) Copyright 2022 Sony Corporation

USB Connection Mode

Selects the USB connection method when the camera is connected to a computer, etc.

1. **MENU → (Setup) → [USB] → [USB Connection Mode] → desired setting.**

Menu item details

Sel. When Connect:
Each time you connect the USB cable to the camera, select the mode you want to use from the following. ([Live Stream(USB Streaming)], [Image Transfer (MSC)], [Image Transfer (MTP)], or [Remote Shooting])

USB Streaming:
Performs USB streaming via the connected computer or smartphone.

MassStorage(MSC):
Establishes a Mass Storage connection when connecting the camera to a computer, etc.
When you connect the camera to a computer or other USB device, the camera is recognized as a removable disk, and you can transfer files on the camera.

MTP:
Establishes an MTP connection between the camera, a computer, and other USB devices.
When you connect the camera to a computer or other USB device, the camera is recognized as a media device, and you can transfer still images/movies on the camera.

- The memory card in memory card slot 1 is the connection target.

Remote Shooting:
Uses Imaging Edge Desktop (Remote) to control the product from a computer, including such functions as shooting and storing images on the computer. You can also use Creators' App to shoot images remotely and transfer images to your smartphone via a USB connection.

Related Topic

- USB Streaming (movie)
- Importing images to the computer
- Operating the camera from a computer (Remote Shoot Function)

5-043-036-16(1) Copyright 2022 Sony Corporation

USB LUN Setting

Enhances compatibility by limiting of USB connection functions.

1. **MENU → (Setup) → [USB] → [USB LUN Setting] → desired setting.**

Menu item details

Multi:
Normally, use [Multi].

Single:
Set [USB LUN Setting] to [Single] only if you cannot make a connection.

5-043-036-16(1) Copyright 2022 Sony Corporation

USB Power Supply

Sets whether to supply power via the USB cable when the product is connected to a computer or an USB device.

1. **MENU → (Setup) → [USB] → [USB Power Supply] → desired setting.**

Menu item details

On:
Power is supplied to the product via a USB cable when the product is connected to a computer, etc.

Off:
Power is not supplied to the product via a USB cable when the product is connected to a computer, etc. If you use an AC adaptor, power will be supplied even when [Off] is selected.

Operations available while supplying power via a USB cable

The following table shows you which operations are available/unavailable while supplying power via a USB cable.

Operation	Available / Unavailable
Shooting images	Available
Playing back images	Available
Wi-Fi/Bluetooth connections	Available
Charging a battery pack	Unavailable
Turning the camera on without a battery pack inserted	Unavailable

Note

- Insert the battery pack into the product to supply power via USB cable.
- This product cannot be powered via the Multi/Micro USB terminal. Use the USB Type-C terminal.

5-043-036-16(1) Copyright 2022 Sony Corporation

HDMI Resolution

When you connect the camera to a TV or monitor device using an HDMI cable (sold separately), you can select the resolution to be output from the HDMI terminal of the camera during still image shooting or playback.

1. **MENU → (Setup) → [External Output] → [HDMI Resolution] → desired setting.**

Menu item details

Auto:
The camera automatically recognizes the resolution of the connected TV or output device and sets the output resolution accordingly.

2160p:
Outputs signals in 2160p.

1080p:
Outputs signals in HD picture quality (1080p).

1080i:
Outputs signals in HD picture quality (1080i).

Note

- If images are not displayed properly using the [Auto] setting, select [1080i], [1080p], or [2160p] based on the connected TV.

5-043-036-16(1) Copyright 2022 Sony Corporation

Interchangeable Lens Digital Camera
ILME-FX30

HDMI Output Settings (movie)

Sets the video and audio to be output to an external recorder/player connected via HDMI when shooting a movie.
Use a Premium High Speed HDMI Cable (sold separately) to output 4K movies or RAW movies.

1. **MENU → (Setup) → [External Output] → [HDMI Output Settings] → desired setting item.**

Menu item details

Rec. Media dur HDMI Output:
Sets whether or not to record movies on the memory card of the camera during HDMI output.

[On]: Records movies on the memory card of the camera, and outputs the movies to the HDMI-connected device at the same time. The color depth for the output movie is based on [Record Setting] under [Movie Settings].

[Off(HDMI Only)]: Does not record movies on the memory card of the camera, and outputs movies only to devices connected via HDMI.

Output Resolution:
Sets the resolution of the image that will be output to another device connected via HDMI when [Rec. Media dur HDMI Output] is set to [On] and [RAW Output] is set to [Off]. ([Auto] / [2160p] / [1080p] / [1080i])

4K Output Set.(HDMI Only):
Sets the frame rate and color depth of 4K movie output to another device connected via HDMI when [Rec. Media dur HDMI Output] is set to [Off(HDMI Only)] and [RAW Output] is set to [Off]. ([59.94p 10bit] / [50p 10bit] / [29.97p 10bit] / [25p 10bit] / [23.98p 10bit] / [24.00p 10bit])

RAW Output:
Sets whether or not to output RAW movies to another RAW-compatible device connected via HDMI. ([On] / [Off])

RAW Output Setting:
Sets the frame rate when outputting RAW movies to another RAW-compatible device connected via HDMI. ([59.94p] / [50p] / [29.97p] / [25p] / [23.98p] / [24.00p])

Time Code Output:
Sets whether or not to output the time code and user bit to another device connected via HDMI. ([On] / [Off])

Time code information is transmitted as digital data, not as an image displayed on the screen. The connected device can then refer to the digital data in order to recognize the time data.

REC Control:
Sets whether to start or stop recording on the external recorder/player remotely by operating the camera when the camera is connected to an external recorder/player. ([On] / [Off])

4ch Audio Output:
When recording audio in 4 channels, set the combination of audio channels that will be output to other devices connected via HDMI.

[CH1/CH2]: Outputs audio from channel 1 to the L (left) side and from channel 2 to the R (right) side.

[CH3/CH4]: Outputs audio from channel 3 to the L (left) side and from channel 4 to the R (right) side.

Hint

- With [REC Control] set to [On], STBY (STBY) is displayed when a recording command is ready to be sent to the external recorder/player, and REC (REC) is displayed when a recording command is being sent to the external recorder/player.
- Even when playing back a movie with 4 channels on a device connected to the HDMI terminal of the camera, the audio is output with the [4ch Audio Output] setting.
- When outputting RAW movies to another device connected via HDMI, set [Log Shooting] under [Log Shooting Setting] to a setting other than [Off]. The setting for [Color Gamut] under [Log Shooting Setting] is applied to RAW movies output via HDMI.

Note

- RAW movies cannot be recorded on the memory card of the camera.
- During slow-motion/quick-motion shooting, [Rec. Media dur HDMI Output] is locked to [On] and [RAW Output] is locked to [Off]. It is not possible to only output 4K movies to a device connected via HDMI without recording the movies on a memory card. It is also not possible to output RAW movies.
- When [Rec. Media dur HDMI Output] is set to [Off(HDMI Only)] or the camera outputs RAW movies, [HDMI Info. Display] becomes temporarily set to [Off].
- When [Rec. Media dur HDMI Output] is set to [Off(HDMI Only)], the counter does not move forward (the actual recording time is not counted) while the movie is being recorded on an external recorder/player.
- When [Log Shooting] under [Log Shooting Setting] is set to [Off], [RAW Output] is locked to [Off].
- Regardless of the [Output Resolution] setting, the HDMI output resolution becomes 1080 in the following cases.*
  - When [Log Shooting] under [Log Shooting Setting] is set to other than [Off].
  - When [Picture Profile] is set to PPLUT1-PPLUT4.

  * However, when [Rec. Media dur HDMI Output] is set to [Off(HDMI Only)] or [RAW Output] is set to [On], movies are output in 4K.
- [REC Control] can be used with external recorders/players that support the [REC Control] function.
- When [Time Code Output] is set to [Off], you cannot set [REC Control].
- Even when REC (REC) is displayed, the external recorder/player may not work properly depending on the settings or status of the recorder/player. Check if the external recorder/player works properly before use.
- When [Time Code Output] is set to [On], images may not be output properly to the TV or recording device. In this case, set [Time Code Output] to [Off].
- It is not possible to output audio in 4 channels to other devices connected via HDMI.
- The gamma is locked to S-Log3 during RAW output.
- While outputting RAW movies, you cannot use [Active] for [SteadyShot].

Related Topic

- Outputting RAW movies to an external RAW recorder

5-043-036-16(1) Copyright 2022 Sony Corporation

HDMI Info. Display

Selects whether or not to display shooting information on a TV or a monitor device when the camera and TV, etc. are connected via an HDMI cable (sold separately).

1. **MENU → (Setup) → [External Output] → [HDMI Info. Display] → desired setting.**

Menu item details

On:
Displays the shooting information on the TV.

The recorded image and shooting information are displayed on the TV, while nothing is displayed on the camera's monitor.

Off:
Does not display the shooting information on the TV.

Only the recorded image is displayed on the TV, while the recorded image and shooting information are displayed on the camera's monitor.

5-043-036-16(1) Copyright 2022 Sony Corporation

CTRL FOR HDMI

When connecting this product to a TV using an HDMI cable (sold separately), you can operate this product by aiming the TV remote control at the TV.

1. **MENU → (Setup) → [External Output] → [CTRL FOR HDMI] → desired setting.**

2. **Connect this product to a TV.**

   The input of the TV is switched automatically and images on this product are displayed on the TV screen.

   - The operation method differs depending on the TV you are using. For details, refer to the operating instructions supplied with the TV.

Menu item details

On:
You can operate this product with a TV's remote control.

Off:
You cannot operate this product with a TV's remote control.

Note

- If you connect this product to a TV using an HDMI cable, available menu items are limited.
- If the product performs unwanted operations in response to the TV remote control, set [CTRL FOR HDMI] to [Off].

5-043-036-16(1) Copyright 2022 Sony Corporation

Interchangeable Lens Digital Camera
ILME-FX30

Language

Selects the language to be used in the menu items, warnings and messages.

1. **MENU → (Setup) → [Area/Date] → [Language] → desired language.**

5-043-036-16(1) Copyright 2022 Sony Corporation

Interchangeable Lens Digital Camera
ILME-FX30

Area/Date/Time Setting

You can set the area (where you are using the camera), daylight savings ([On]/[Off]), the date display format, and the date and time.
The Area/Date/Time setting screen will be displayed automatically if you did not register your smartphone in the initial setup or when the internal rechargeable backup battery has fully discharged. Select this menu to set the date and time after the first time.

1. **MENU → (Setup) → [Area/Date] → [Area/Date/Time Setting] → desired setting.**

Menu item details

Area Setting:
Sets the area where you are using the camera.

Daylight Savings:
Selects Daylight Savings [On] / [Off].

Date/Time:
Sets the date and time.

Date Format:
Selects the date display format.

Hint

- To charge the internal rechargeable backup battery, insert a charged battery pack, and leave the product for 24 hours or more with the power off.
- If the clock resets every time the battery is charged, the internal rechargeable backup battery may be worn out. Consult your service facility.

Related Topic

- Performing initial setup for the camera

5-043-036-16(1) Copyright 2022 Sony Corporation

Interchangeable Lens Digital Camera
ILME-FX30

NTSC/PAL Selector

Plays back movies recorded with the product on a NTSC/PAL system TV.

1. **MENU** → **(Setup)** → **[Area/Date]** → **[NTSC/PAL Selector]** → **[Enter]**

5-043-036-16(1) Copyright 2022 Sony Corporation

Audio signals

Selects whether the product produces a sound or not.

1. **MENU → (Setup) → [Sound Option] → [Audio signals] → desired setting.**

Menu item details

On:all:
The shutter produces sounds, and sounds are produced for example when the focus is achieved by pressing the shutter button halfway down.

On:shutter only:
Only the shutter produces sounds. Sounds are not produced when focusing by pressing the shutter button halfway down, etc.

Off:
Sounds are not produced.

Hint

- When [Silent Mode] is set to [On], [Audio signals] becomes locked to [Off].

Note

- If [Focus Mode] is set to [Continuous AF], the camera will not beep when it focuses on a subject.

5-043-036-16(1) Copyright 2022 Sony Corporation

REC Lamp

Sets whether to turn on the recording lamps during movie recording.

1. **MENU → (Setup) → [Setup Option] → [REC Lamp] → desired setting.**

Menu item details

All On:
Turns on all recording lamps.

Only Front Off:
Does not turn on the recording lamp on the front side, but turns on the recording lamp on the rear side and the REC (recording) button.

All Off:
Does not turn on any of the recording lamps.

Hint

- Change the recording lamp settings when there is an object that reflects light, such as glass, in the direction of shooting.
- The REC (recording) button on the top lights up along with the recording lamp on the rear side.

5-043-036-16(1) Copyright 2022 Sony Corporation

Video Light Mode

S&Q

Sets the illumination setting for the HVL-LBPC LED light (sold separately).

1. **MENU → (Setup) → [Setup Option] → [Video Light Mode] → desired setting.**

Menu item details

Power Link:
The video light turns on/off in sync with the ON/OFF operation of this camera.

REC Link:
The video light turns on/off in sync with movie recording start/stop.

REC Link&STBY:
The video light turns on when movie recording starts and dims when not recording (STBY).

Auto:
The video light automatically turns on when it is dark.

5-043-036-16(1) Copyright 2022 Sony Corporation

Pixel Mapping

You can manually optimize the image sensor (pixel mapping). Perform [Pixel Mapping] regularly according to the following procedure. We recommend that you perform the operation once every three days.

1. **MENU → (Setup) → [Setup Option] → select [Pixel Mapping].**

2. **Attach the lens cap.**
   - Be sure to attach the lens cap.

3. **Select [OK] on the confirmation screen.**

   Pixel mapping will be performed.

   - The camera cannot be operated during pixel mapping.
   - The camera will restart when pixel mapping is complete.

Hint

- When you turn the camera on, a message to perform pixel mapping will occasionally be displayed. If the message is displayed, perform [Pixel Mapping].
- If you see bright spots in a recorded image on the camera monitor, immediately perform [Pixel Mapping].

Note

- Pixel mapping cannot be performed when the battery is low.
- If [Pixel Mapping] is not performed regularly, bright spots may appear in recorded images.

5-043-036-16(1) Copyright 2022 Sony Corporation

Version

Displays the version of this product's software. Check the version when updates for this product's software are released, etc.
Also displays the version of the lens if a lens compatible with firmware updates is attached.
The version of the Mount Adaptor is displayed in the lens area if a Mount Adaptor compatible with firmware updates is attached.

1. **MENU → (Setup) → [Setup Option] → [Version].**
   - When the camera is connected to the Internet, software information is obtained. If new software is available, information about it will be displayed (when the camera's system software (firmware) is Ver.5.00 or later).

Menu item details

Body:
Displays the firmware version of the camera body.

Lens:
Displays the firmware version of the lens when a lens that supports firmware updates is attached.

Hint

- You can also save the downloaded firmware data to a memory card and use the memory card to update the firmware of the camera.

Note

- Updating can be performed only when the remaining battery level is 51% or more. Use a sufficiently charged battery pack.

5-043-036-16(1) Copyright 2022 Sony Corporation

Display Serial Number

Displays the serial number of the camera.
This function can be used when the camera's system software (firmware) is Ver.3.00 or later.

1. **MENU → (Setup) → [Setup Option] → [Display Serial Number].**

5-043-036-16(1) Copyright 2022 Sony Corporation

Interchangeable Lens Digital Camera
ILME-FX30

Privacy Notice

Displays the privacy notification screen.
This function can be used when the camera's system software (firmware) is Ver.6.00 or later.

1. **MENU → (Setup) → [Setup Option] → [Privacy Notice].**

5-043-036-16(1) Copyright 2022 Sony Corporation

Screen Reader (For some models only)

Sets the function for reading aloud information such as text on the screen.
This function is available only when the menu language is set to English on models sold in North America. (As of the release date)

1. **MENU → (Setup) → [Accessibility] → [Screen Reader] → Select an item to set, and then select the desired setting.**

Menu item details

Screen Reader:
Sets whether to use the function to read aloud. ([On]/[Off])

Speed:
Sets the speed when reading aloud.

Volume:
Sets the volume when reading aloud.

5-043-036-16(1) Copyright 2022 Sony Corporation

Interchangeable Lens Digital Camera
ILME-FX30

Save/Load Settings

You can save/load camera settings to/from a memory card or to/from the cloud (C3 Portal). You can also load settings from another camera of the same model.
Saving/loading a setting file to/from the cloud can be performed when the camera's system software (firmware) is Ver.3.00 or later.
A service contract is required to use C3 Portal.

If you want to use the cloud to save/load a setting file, connect the camera to the smartphone application Creators' App for enterprise in advance.
For details on Creators' App for enterprise, refer to the following website.
https://helpguide.sony.net/promobile/c3p_app/v1/en/index.html

1. **MENU → (Setup) → [Reset/Save Settings] → [Save/Load Settings] → desired item.**
   - When you perform [Load] or [Save], select [Media]/[Cloud(Private)]/[Cloud(Share)] as the loading source or save destination of the setting file.

Menu item details

Load:
Loads settings from a memory card or from the cloud to this camera.
Save:
Saves the current settings of this camera to a memory card or to the cloud.
Delete:
Deletes the settings saved on a memory card.

Settings that cannot be saved

The following setting parameters cannot be saved using the [Save/Load Settings] function. (Menu items without setting parameters, such as, [Focus Magnifier], are not listed.)

(Shooting)
IPTC Information
Copyright Info

(Exposure/Color)
White Balance: Custom 1/Custom 2/Custom 3

(Focus)
Face Memory

(Network)
FTP Transfer Func. *
Network Streaming
Cloud Connection
WPS Push
Access Point Set.

Wi-Fi Frequency Band

LAN IP Address Setting

Edit Device Name

Import Root Certificate

Access Authen. Settings

Security(IPsec)

* You can save or load settings under [FTP Transfer Func.] by selecting MENU → (Network) → [FTP Transfer] → [FTP Transfer Func.] → [Save/Load FTP Settings]. For details, refer to the "FTP Help Guide."
https://rd1.sony.net/help/di/ftp_2220/h_zz/

(Setup)

Language

Area/Date/Time Setting

Note

- You can save up to 10 settings per memory card. When 10 settings have been already saved, you cannot perform [Save New]. Delete the existing settings using [Delete], or overwrite them.
- You can save up to 60 settings in C3 Portal. When 60 settings have been already saved, you cannot perform [Save New]. Overwrite the existing settings or use C3 Portal to delete them.
- Only Slot 1 is used for saving or loading data. You cannot change the saving/loading destination slot.
- You cannot load settings from a camera of a different model.
- Even if the model name is the same, settings from a camera with a different system software version may fail to load.
- You can use this function to save settings registered to [MR Camera Set. Memory]. However, [Save/Load Settings] is unavailable when the shooting mode is set to [MR Recall Camera Setting]. Set the shooting mode to a mode other than MR (MR Recall Camera Setting) before using this function.

Related Topic

- C3 Portal

5-043-036-16(1) Copyright 2022 Sony Corporation

Setting Reset

Resets the product to the default settings. Even if you perform [Setting Reset], the recorded images are retained.

1. **MENU → (Setup) → [Reset/Save Settings] → [Setting Reset] → desired setting.**

Menu item details

Camera Settings Reset:
Initializes the main shooting settings to the default settings. The setting values for both still image shooting and movie recording are initialized.

Initialize:
Initializes all the settings to the default settings.

Note

- Be sure not to eject the battery pack while resetting.
- If you perform [Initialize], the privacy notice agreement will also be initialized, so agree to the privacy notice again before using the camera.
- The settings for [Picture Profile] are not reset even when [Camera Settings Reset] or [Initialize] is performed, except the settings for PPLUT 1 - 4.
- The check mark for [Picture Profile] in [Different Set for Still/Mv] is not reset when you perform either [Camera Settings Reset] or [Initialize].
- The security and network settings are not deleted when you perform [Camera Settings Reset].
- To reset the security and network settings to the default settings, perform either [Reset Network Set.] or [Initialize]. However, even if you perform [Reset Network Set.] when [Airplane Mode] is set to [On], [Airplane Mode] will not be reset to [Off].

5-043-036-16(1) Copyright 2022 Sony Corporation

Functions available with a smartphone (Creators' App)

Using the smartphone application Creators' App, you can shoot an image while controlling the camera using a smartphone or transfer the images recorded on the camera to the smartphone.
Download and install the application Creators' App from your smartphone's application store. If Creators' App is already installed on your smartphone, be sure to update it to the latest version.
For details on Creators' App, refer to the following website.
https://www.sony.net/ca/

Hint

- You can also install Creators' App by scanning the QR Code displayed on the screen of the camera using your smartphone.

Note

- Depending on future version upgrades, the operational procedures or screen displays are subject to change without notice.

Supported smartphones

Refer to the support page for the latest information.
https://www.sony.net/ca/help/mobile/

- For details on Bluetooth versions compatible with your smartphone, check the product website for your smartphone.

5-043-036-16(1) Copyright 2022 Sony Corporation

C3 Portal

You can use the smartphone application Creators' App for enterprise to load a setting file and LUT file from the cloud (C3 Portal) (when the camera's system software (firmware) is Ver.3.00 or later).
A service contract is required to use C3 Portal.

Download and install the application Creators' App for enterprise from your smartphone's application store. If Creators' App for enterprise is already installed on your smartphone, be sure to update it to the latest version.
For details on Creators' App for enterprise, refer to the following website.
https://helpguide.sony.net/promobile/c3p_app/v1/en/index.html

Note

- C3 Portal and Creators' App for enterprise may only be available in certain countries and regions.

Related Topic

- Manage User LUTs
- Save/Load Settings

5-043-036-16(1) Copyright 2022 Sony Corporation

Monitor & Control

Monitor & Control is a smartphone application that supports monitoring and remote shooting functions required for movie shooting.
Monitor & Control provides detailed live view and remote shooting controls by using the screen of your smartphone as a monitor for movie shooting (when the camera's system software (firmware) is Ver.3.00 or later).

Download and install the application Monitor & Control from your smartphone's application store. If Monitor & Control is already installed on your smartphone, be sure to update it to the latest version.
For details on Monitor & Control, refer to the following website.
https://www.sony.net/ccmc/

5-043-036-16(1) Copyright 2022 Sony Corporation

Interchangeable Lens Digital Camera
ILME-FX30

Pairing the camera with a smartphone (Smartphone Connection)

Connects the camera to your smartphone (pairing) to use the smartphone application Creators' App.
This function can be used when the camera's system software (firmware) is Ver.2.00 or later.

If you did not connect the camera with your smartphone when you turned on the camera for the first time, perform the following procedure.
The following is the procedure for connecting the camera to your smartphone when you install Creators' App on your smartphone for the first time.
: Operations performed on the smartphone
: Operations performed on the camera

1. **: On the camera, select MENU → (Network) → [Cnct./Remote Sht.] → [Smartphone Connection]**

2. **: Follow the instructions on the screen and set [Bluetooth Function] to [On].**

   A screen for waiting for a connection from the app will appear.

   - If [Bluetooth Function] is already set to [On], the screen for waiting for a connection from the app will appear immediately.

3. **: Launch Creators' App on your smartphone.**

4. **: Follow the instructions on the screen to pair the camera with your smartphone.**

   - When the connection is completed, a menu to select a function for the camera appears on the smartphone.

5. **: On the smartphone screen, select the desired function.**

Connecting to a smartphone via a Wi-Fi access point

After pairing in steps 1 to 4, connect the camera and smartphone to the same Wi-Fi access point by selecting MENU on the camera → (Network) → [Wi-Fi] → [Wi-Fi Connect] → [On]. After that, follow the instructions on the smartphone screen to connect the camera and smartphone.

If you have used Creators' App with other cameras

Launch Creators' App after Step 2, open the [Cameras] screen, select the (Add Camera) button, and follow the instructions on the screen to continue the operation.

About the icons when connecting to a smartphone

Bluetooth connection available / Bluetooth connection unavailable

Connected to Wi-Fi (via a Wi-Fi access point)

Disconnected from Wi-Fi (via a Wi-Fi access point)

Connected to Wi-Fi/Disconnected from Wi-Fi (Wi-Fi Direct)

Connecting the camera and smartphone without pairing

If you want to connect without pairing, you need to perform the Wi-Fi connection operation every time.

1. On the camera, select MENU → (Network) → [Cnct./Remote Sht.] → [Smartphone Connection].
2. Press the (Delete) button on the camera to switch to the SSID and password screen.
3. Open the Wi-Fi setting screen on your smartphone.
4. On the Wi-Fi setting screen on your smartphone, select the SSID displayed on the camera and enter the password.
5. Launch Creators' App on your smartphone and open the [Cameras] screen.
6. Select the (Setup) button in the upper right corner of the [Cameras] screen, and then select [Connect only via Wi-Fi].
7. On the screen of Creators' App on your smartphone, select the product name of the camera (ILME-FX30).
   The smartphone will connect to the camera.

Note

- To ensure a secure wireless LAN connection, we strongly recommend using an access point with WPA3 or WPA2 security settings. Connecting to an access point without security settings may result in hacking, access from malicious third parties, or attacks on vulnerabilities. Unless there is a specific reason, we do not recommend using an access point without security settings.
- When establishing a Bluetooth connection, only pair with trusted devices. Avoid unsolicited pairing requests or connections to unknown devices.
- Turn off the Bluetooth function when not in use.
- Check your paired devices regularly and delete any unnecessary ones.
- [Smartphone Connection] cannot be executed when [Airplane Mode] is set to [On].
- Up to 2 devices can be connected to the camera at the same time using Bluetooth communication.
- Radio wave interference may occur as Bluetooth communications and Wi-Fi (2.4 GHz) communications use the same frequency band. If your Wi-Fi connection is unstable, it may be improved by turning off the Bluetooth function of the smartphone.

Related Topic

- Functions available with a smartphone (Creators' App)
- Using a smartphone as a remote commander
- Select on Cam & Send (transferring to a smartphone)
- Cnct. while Power OFF (smartphone)
- Reading location information from a smartphone

5-043-036-16(1) Copyright 2022 Sony Corporation

Using a smartphone as a remote commander

With Creators' App, you can shoot images while checking the shooting range of the camera on the screen of the smartphone. Connect the camera and smartphone by referring to "Related Topic" at the bottom of this page. For details on functions that can be operated from a smartphone, refer to the following website.
https://www.sony.net/ca/help/opr/

Related Topic

- Pairing the camera with a smartphone (Smartphone Connection)
- Remote Shoot Setting

5-043-036-16(1) Copyright 2022 Sony Corporation

Remote Shoot Setting

Configures settings for images saved when performing remote shooting using a smartphone or computer.

1 **MENU → (Network) → [Cnct./Remote Sht.] → [Remote Shoot Setting] → desired setting item.**

Menu item details

Still Img. Save Dest.:
Sets the save destination. ([Destination Only]/[Dest.+Camera]/[Camera Only])

Save Image Size:
Selects the file size for images to be transferred to the smartphone or the computer when [Still Img. Save Dest.] is set to [Dest.+Camera]. The original-sized JPEG/HEIF file or a 2M-equivalent JPEG/HEIF file can be transferred. ([Original]/[2M])

RAW+J Save Image:
Selects the file type for images to be transferred to the smartphone or the computer when [Still Img. Save Dest.] is set to [Dest.+Camera] and [File Format] is set to [RAW & JPEG]. ([RAW & JPEG]/[JPEG Only]/[RAW Only])

RAW+H Save Image:
Selects the file type for images to be transferred to the smartphone or the computer when [Still Img. Save Dest.] is set to [Dest.+Camera] and [File Format] is set to [RAW & HEIF]. ([RAW & HEIF]/[HEIF Only]/[RAW Only])

Save JPEG Size/Save HEIF Size:
Use this item when sorting and saving JPEG/HEIF images with different image quality and image sizes to Slot 1 and Slot 2 by setting [Recording Media] to [Sort Recording].
Among the different sizes of image to be saved to Slot 1 and Slot 2, selects whether the larger or smaller size will be transferred to the smartphone or the computer when [Still Img. Save Dest.] is set to [Destination Only]/[Dest.+Camera]. ([Large Size]/[Small Size])

Note

- When an unrecordable memory card is inserted into the camera, you cannot record still images even if [Still Img. Save Dest.] is set to [Camera Only] or [Dest.+Camera].
- When [Camera Only] or [Dest.+Camera] is selected for [Still Img. Save Dest.] and no memory card is inserted into the camera, the shutter will not be released even if [Release w/o Card] is set to [Enable].
- While a still image is being played back on the camera, you cannot perform remote shooting using a smartphone or a computer.
- [RAW+J Save Image] and [RAW+H Save Image] can be set only when [File Format] under [Image Quality Settings] is set to [RAW & JPEG] or [RAW & HEIF].

Related Topic

- Using a smartphone as a remote commander
- Rec. Media Settings (still image/movie): Recording Media (still image)

5-043-036-16(1) Copyright 2022 Sony Corporation

Interchangeable Lens Digital Camera
ILME-FX30

Select on Cam & Send (transferring to a smartphone)

You can transfer images to a smartphone by selecting images on the camera.
Refer to "Pairing the camera with a smartphone (Smartphone Connection) " to pair the camera and smartphone in advance.

The following is the procedure for transferring the image currently displayed on the camera.

1. **MENU → (Network) → [Cnct./Remote Sht.] → [Select on Cam & Send] → [Size of Sending Image], [RAW+J/H Send Target], and [Sending Target] → desired setting.**

2. **Display the image to be transferred on the playback screen.**

3. **MENU → (Network) → [Cnct./Remote Sht.] → [Select on Cam & Send] → [Send] → [This Image].**

4. **Launch Creators' App on your smartphone.**

   A message indicating that the transfer has started will appear.

5. **Select [OK] on the smartphone.**

   The image will be transferred to the smartphone.

   - Even while a transfer is in progress, you can perform the following operations:*
     - Shooting
     - Menu operations
     - Pausing an ongoing transfer
     - Resuming or canceling a paused transfer
     - Scheduling additional transfers
   - The (transferred) icon will be displayed on images that have been transferred.*
   - You can transfer multiple images at once by selecting a setting other than [This Image] under [Send].

   * When the camera's system software (firmware) version is Ver.5.00 or later

Menu item details

Send:
Selects images and transfers them to a smartphone. ([This Image]/[All Images in This Group]/[All with this date]/[Add filter condition]/[Manual selection])

- The options displayed may differ depending on the View Mode selected on the camera.
- If you select [Manual selection], select the desired images using the center of the control wheel, then press MENU → [Enter].

Size of Sending Image:
Selects the file size for images to be transferred to the smartphone. The original-sized JPEG/HEIF file or a 2M-equivalent JPEG/HEIF file can be transferred. ([Original]/[2M])

RAW+J/H Send Target:

Selects the file type for images to be transferred to a smartphone when the images are shot with [File Format] under [Image Quality Settings] set to [RAW & JPEG] or [RAW & HEIF]. ([JPEG & HEIF]/[RAW]/[RAW+J & RAW+H])

Px Sending Target:

Sets whether to transfer the low-bit-rate proxy movie or the high-bit-rate original movie when transferring a movie to a smartphone. ([Proxy Only]/[Original Only]/[Proxy & Original])

When you select [Proxy Only], movies can be transferred faster than when transferring the original movies.

To filter the images to be transferred (Add filter condition)

Images to be transferred can be filtered by the following conditions:

- Target Group: [This Date]/[This Media]
- Still Images/Movies: [All]/[Only Still Images]/[Only Movies]
- Target Img (Rating): [★]-[★★★], [★OFF]
- Target Movie (S): [All]/[Only Shot Mark Mov.]
- Target Img (Protect): [All]/[Only Protected Img.]
- Trgt. Img (Clip Flag) *: [OK]/[KP]/[NG]/[OFF]
  - * When the camera's system software (firmware) is Ver.6.00 or later.
- Transfer Status *: [All]/[Only Non-transfer]
  - * Images transferred by selecting them on the smartphone are treated as not yet transferred.

About the transfer icons

This section describes the icons displayed if the camera's system software (firmware) is Ver.5.00 or later.

- Current transfer status icons
  (Transferring): Images are being transferred to your smartphone.
  (Transfer error)*: The connection was lost while transferring images to the smartphone by operating the camera. You can check the details of the error by opening the [Select on Cam & Send] menu.
  - * If a transfer error occurs while transferring images by operating the smartphone, this icon will not be displayed.
- Transfer status icons on played-back images
  (Transferring): The image currently being played back is being transferred to your smartphone.
  (Transferred)*: The image currently being played back has been transferred to the smartphone.
  - * For images transferred by selecting them on the smartphone, this icon will not be displayed.

Hint

- Even if a transfer stops due to a network failure, you can simply resume the transfer from the camera once the connection is restored, and the remaining images will then be transferred.

Note

- Transfers initiated from the smartphone cannot be paused or canceled on the camera.
- While transferring images by operating your smartphone, you can schedule additional transfers from the camera, but it may take some time before the transfers begin.
- Even if you cancel the transfer midway, the images that have already been transferred will remain.
- If the camera is turned off, restarted, or disconnected during a transfer, the transfer will be paused.
- Depending on the smartphone, the transferred movie may not be played back correctly. For example, the movie may not play smoothly, or there may be no sound.
- Depending on the format of the still image, movie, slow-motion movie, or quick-motion movie, it may not be possible to play it back on a smartphone.

- When [Airplane Mode] is set to [On], you cannot connect this product and the smartphone. Set [Airplane Mode] to [Off].
- When establishing a Bluetooth connection, only pair with trusted devices. Avoid unsolicited pairing requests or connections to unknown devices.
- Turn off the Bluetooth function when not in use.
- Check your paired devices regularly and delete any unnecessary ones.
- After you delete the pairing information for the camera from your smartphone, delete pairing information for the smartphone from the camera using [Manage Paired Device].

Related Topic

- Functions available with a smartphone (Creators' App)
- Pairing the camera with a smartphone (Smartphone Connection)
- Airplane Mode

5-043-036-16(1) Copyright 2022 Sony Corporation

Reset Transfer Status (transferring to a smartphone)

You can reset the transfer status of images that have been transferred to your smartphone. Use this function if you want to retransfer images that have previously been transferred. The transferred images will not be deleted even if you reset the transfer status.

1. **MENU → (Network) → [Cnct./Remote Sht.] → [Reset Transfer Status].**
   - If you press [OK] on the confirmation screen, all images that have been transferred to your smartphone will become untransferred images.

Hint

- If there are images being transferred or scheduled to be transferred, you cannot execute [Reset Transfer Status]. Wait until all transfers are complete before resetting.

Related Topic

- Select on Cam & Send (transferring to a smartphone)

5-043-036-16(1) Copyright 2022 Sony Corporation

Interchangeable Lens Digital Camera
ILME-FX30

Cnct. while Power OFF (smartphone)

Sets whether or not to accept Bluetooth connections from a smartphone while the camera is turned off. When [Cnct. while Power OFF] is set to [On], you can browse images on the camera's memory card and transfer images from the camera to a smartphone by operating the smartphone.

1. **MENU → (Network) → [Cnct./Remote Sht.] → [Cnct. while Power OFF] → desired setting.**

Menu Item Details

On :
Accepts Bluetooth connections from a smartphone while the camera is turned off.
The battery level is depleted gradually while the camera is turned off. If you do not want to use [Cnct. while Power OFF], turn it off.

Off :
Does not accept Bluetooth connections from a smartphone while the camera is turned off.

How to browse/transfer images on the smartphone

Refer to "Pairing the camera with a smartphone (Smartphone Connection) " to pair the camera and smartphone in advance.

1. Set [Cnct. while Power OFF] to [On].
2. Turn off the camera.
3. Launch Creators' App on the smartphone.
4. Select [Import] on the [Cameras] screen in Creators' App.
   - The images saved on the memory card of the camera can be viewed and are ready to be transferred.

Note

- If the smartphone is not operated for a certain period of time, the Bluetooth connection will become deactivated. Select [Import] again on the smartphone.
- When the camera is turned on, the camera will switch to the shooting screen, and the connection with the smartphone will be terminated.
- [Cnct. while Power OFF] will be set to [Off] if you cancel pairing between the camera and the smartphone or pairing fails.
- If the function does not work properly, check the following notes and then try pairing again.
  - Ensure that the camera is either not connected to any other device or connected to only one device using Bluetooth communication. (Up to 2 devices can be connected to the camera at the same time.)
  - Confirm that [Airplane Mode] for the camera is set to [Off].
  - If the function does not work properly even after you have performed the above operations, delete the pairing information for the device that you want to connect using [Manage Paired Device] on the camera.
- When establishing a Bluetooth connection, only pair with trusted devices. Avoid unsolicited pairing requests or connections to unknown devices.
- Turn off the Bluetooth function when not in use.
- Check your paired devices regularly and delete any unnecessary ones.

- After you delete the pairing information for the camera from your smartphone, delete pairing information for the smartphone from the camera using [Manage Paired Device].

Related Topic

- Functions available with a smartphone (Creators' App)
- Pairing the camera with a smartphone (Smartphone Connection)
- Select on Cam & Send (transferring to a smartphone)
- Bluetooth Settings

5-043-036-16(1) Copyright 2022 Sony Corporation

Reading location information from a smartphone

You can use the application Creators' App to obtain location information from a smartphone that is connected with your camera using Bluetooth communication. You can record the obtained location information when shooting images. Refer to "Pairing the camera with a smartphone (Smartphone Connection) " to pair the camera and smartphone in advance.

1. **Launch Creators' App on your smartphone, open the [Cameras] screen, and tap [Setup] → [Location Information Linkage].**

2. **Activate [Location Information Linkage] on the [Location Information Linkage] setting screen of Creators' App.**
   - (obtaining location information icon) will be displayed on the monitor of the camera. Location information obtained by your smartphone using GPS, etc., will be recorded when shooting images.
   - When you activate [Auto Time Correction] or [Auto Area Adjustment] on a linked smartphone, the camera automatically corrects the date setting or area setting using information from the smartphone.

Icons displayed when obtaining the location information

(Obtaining location information): The camera is obtaining the location information.
(Location information cannot be obtained): The camera cannot obtain the location information.

Hint

- Location information can be linked when Creators' App is running on your smartphone even if the smartphone monitor is off. However, if the camera has been turned off for a while, location information may not be linked immediately when you turn the camera back on. In this case, location information will be linked immediately if you open the Creators' App screen on the smartphone.
- When Creators' App is not operating, such as when the smartphone is restarted, launch Creators' App to resume location information linking.
- If the location information linking function does not work properly, see the following notes and perform pairing again.
  - Confirm that the Bluetooth function of your smartphone is activated.
  - Ensure that the camera is either not connected to any other device or connected to only one device using Bluetooth communication. (Up to 2 devices can be connected to the camera at the same time.)
  - Confirm that [Airplane Mode] for the camera is set to [Off].
  - Delete the pairing information for the camera registered in Creators' App.
  - Delete the pairing information for the camera registered in the Bluetooth settings on your smartphone.
  - Delete the pairing information for your smartphone registered in [Manage Paired Device] on the camera.

Note

- If you publish or share still images or movies taken with this camera on the internet while location information is linked using Creators' App, the shooting location may be unintentionally made known to third parties. In this case, turn off [Location Information Linkage] in Creators' App before shooting the images.
- When you initialize the camera, the pairing information is also deleted. Before performing pairing again, first delete the pairing information for the camera registered in the smartphone's Bluetooth settings and Creators' App.
- The location information will not be recorded when it cannot be obtained, such as when the Bluetooth connection is disconnected.

- The camera can be paired with up to 15 Bluetooth devices, but can link the location information with that of only one smartphone. If you want to link the location information with that of another smartphone, turn off the [Location Information Linkage] function under [Setup] in Creators' App on the smartphone that is already linked.
- If the Bluetooth connection is unstable, remove any obstacles, such as people or metal objects from between the camera and the paired smartphone.
- The communication distance for the Bluetooth connection or Wi-Fi may vary depending on the conditions of use.

Related Topic

- Functions available with a smartphone (Creators' App)
- Pairing the camera with a smartphone (Smartphone Connection)
- Bluetooth Settings

5-043-036-16(1) Copyright 2022 Sony Corporation

Recommended computer environment

You can confirm the operating computer environment of the software from the following URL:
https://www.sony.net/pcenv/

5-043-036-16(1) Copyright 2022 Sony Corporation

Connecting the camera to a computer

1. **Insert a sufficiently charged battery pack into the camera.**

2. **Turn on the camera and the computer.**

3. **(Setup) → [USB] → Set [USB Connection Mode] to [MassStorage(MSC)].**

4. **Connect the USB Type-C terminal on the camera to the computer with a USB cable.**
   - When you connect the camera to the computer for the first time, the procedure for recognizing the camera may start automatically on the computer. Wait until the procedure is finished.
   - If you connect the camera to your computer using the USB cable when [USB Power Supply] is set to [On], power is supplied from your computer. (Default setting: [On])
   - Use a cable that complies with the USB standard.
   - Use a SuperSpeed USB 10Gbps (USB 3.2)-compatible computer and the USB cable (supplied) for higher-speed communications.

Note

- Do not turn on/off or restart the computer, or wake the computer from sleep mode when a USB connection has been established between the computer and the camera. Doing so may cause a malfunction. Before turning on/off or restarting the computer, or waking the computer from sleep mode, disconnect the camera from the computer.

Related Topic

- Sides
- USB Connection Mode
- USB LUN Setting

5-043-036-16(1) Copyright 2022 Sony Corporation

Disconnecting the camera from the computer

Perform the following operations on the computer before disconnecting the camera from the computer.

1. **Click (Safely Remove Hardware and Eject Media) in the taskbar.**

2. **Click the displayed message.**

   The following operations are available after you have completed the steps above.

   - Disconnecting the USB cable.
   - Removing a memory card.
   - Turning off the camera.

Note

- On Mac computers, drag and drop the memory card icon or the drive icon into the “Trash” icon. The camera will be disconnected from the computer.
- On some computers, the disconnection icon may not appear. In this case, you can skip the steps above.
- Do not remove the USB cable from the camera while the access lamp is lit. The data may be damaged.

5-043-036-16(1) Copyright 2022 Sony Corporation

Introduction to computer software (Imaging Edge Desktop/Catalyst)

Imaging Edge Desktop

Imaging Edge Desktop is a software suite that includes functions such as remote shooting from a computer, and adjusting or developing RAW images recorded with the camera.

For details on how to use Imaging Edge Desktop, refer to the support page.
https://www.sony.net/disoft/help/

Installing Imaging Edge Desktop on your computer
Download and install the software by accessing the following URL:
https://www.sony.net/disoft/d/

Catalyst Browse (free software)/Catalyst Prepare (paid software)

Catalyst Browse is software for previewing clips. You can preview recorded XAVC S/XAVC HS clips, view and edit media metadata, apply image stabilization* using metadata, apply color calibration, copy to the local hard drive, or transcode to a variety of formats and so on with Catalyst Browse.
Catalyst Prepare adds to the functions of Catalyst Browse allowing you to organize clips using bins, perform basic timeline editing with storyboards, and so on.

* For the conditions of use of the image stabilization function, refer to the support page.

Installing Catalyst Browse/Catalyst Prepare on your computer
Download and install the software by accessing the following URL:
https://www.sony.net/catalyst/

5-043-036-16(1) Copyright 2022 Sony Corporation

Importing images to the computer

You can import images from the camera to a computer by connecting the camera to the computer with a USB cable, or by inserting the memory card of the camera into the computer.
Open the folder in which the images you want to import are stored on the computer, and then copy the images to the computer.

Example: Folder tree during USB Mass Storage connection

- SD card

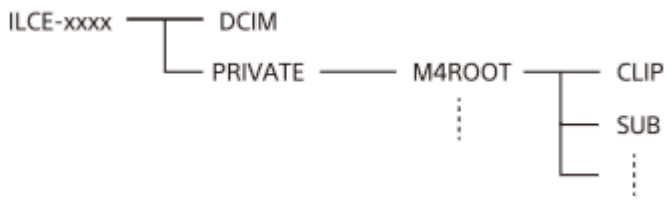

- CFexpress Type A memory card

DCIM: still images
CLIP: movies
SUB: proxy movies

Note

- Do not edit or otherwise process movie files/folders from the connected computer. Movie files may be damaged or become unplayable. Do not delete movies on the memory card from the computer. Sony is not held liable for consequences resulting from such operations via the computer.
- If you delete images or perform other operations from the connected computer, the image database file may become inconsistent. In this case, repair the image database file.
- The folder tree is different during MTP connection.

5-043-036-16(1) Copyright 2022 Sony Corporation

Interchangeable Lens Digital Camera
ILME-FX30

Operating the camera from a computer (Remote Shoot Function)

Uses a Wi-Fi or USB connection, etc. to control the camera from a computer, including such functions as shooting and storing images on the computer.
When the camera and a smartphone are connected, you cannot control the camera from a computer. Make sure that the camera is not connected to a smartphone beforehand.
For details on [Remote Shoot Function], refer to the following URL:
https://support.d-imaging.sony.co.jp/app/imagingedge/l/instruction/4_1_connection/index.php

The following is the procedure for connecting the camera to your computer using a Wi-Fi connection via a Wi-Fi access point. If you will use another connection method, refer to “How to connect the camera and the computer using a method other than a Wi-Fi access point.”

1. **Select MENU → (Network) → [Wi-Fi] → [Wi-Fi Connect] → [On] to connect the camera to the Wi-Fi access point.**
   - Connect the computer to the same Wi-Fi access point.
2. **Select MENU → (Network) → [Cnct./Remote Sht.] → [Remote Shoot Function] → [Remote Shooting] → [On].**
3. **Select [Access Authen. Info] to display the information such as the username, password, and fingerprint.**
   - You can check the information by selecting MENU → (Network) → [Network Option] → [Access Authen. Info].
4. **Launch Imaging Edge Desktop (Remote) on the computer, and then enter and confirm the access authentication information.**

   You can now operate the camera using Imaging Edge Desktop (Remote).

Menu item details

Remote Shooting:
Sets whether or not to use the Remote Shooting function. ([On] / [Off])

Pairing:
When connecting via a Wi-Fi access point without using the [Access Authen.] function, pair the camera with the computer.

Wi-Fi Direct Info.:
Displays information for connecting the computer and the camera via Wi-Fi Direct.

How to connect the camera and the computer using a method other than a Wi-Fi access point

When connecting with Wi-Fi Direct
Use the camera as an access point, and connect the computer to the camera directly via Wi-Fi.
Select MENU → (Network) → [Cnct./Remote Sht.] → [Remote Shoot Function] → [Wi-Fi Direct Info.] to display the Wi-Fi connection information (SSID and password) for the camera. Connect the computer and the camera using the Wi-Fi connection information displayed on the camera.

When connecting with a USB cable

Connect the USB Type-C terminal on the camera to the computer with the USB cable (supplied).
Next, select [Remote Shooting] on the screen displayed on the camera.

Hint

- In [Remote Shoot Setting] under [Cnct./Remote Sht.], you can set the save destination and saved format of still images for remote shooting.
- When [Access Authen.] is set to [Off] and you are connecting via a Wi-Fi access point, you need to pair the camera with the computer. Select MENU → (Network) → [Cnct./Remote Sht.] → [Remote Shoot Function] → [Pairing] after Step 1, and then pair the camera and the computer using Imaging Edge Desktop (Remote) on the computer. Pairing information is deleted when you initialize the camera.

Note

- To ensure a secure wireless LAN connection, we strongly recommend using an access point with WPA3 or WPA2 security settings. Connecting to an access point without security settings may result in hacking, access from malicious third parties, or attacks on vulnerabilities. Unless there is a specific reason, we do not recommend using an access point without security settings.
- If you set [Access Authen.] to [Off], communication will be performed without authentication or encryption via SSH connection. This may result in the content being intercepted or the camera being accessed by an unintended third party. If you use the remote shooting function, we recommend setting [Access Authen.] to [On].

Related Topic

- Introduction to computer software (Imaging Edge Desktop/Catalyst)
- Remote Shoot Setting

5-043-036-16(1) Copyright 2022 Sony Corporation

Remote Shoot Setting

Configures settings for images saved when performing remote shooting using a smartphone or computer.

1 **MENU → (Network) → [Cnct./Remote Sht.] → [Remote Shoot Setting] → desired setting item.**

Menu item details

Still Img. Save Dest.:
Sets the save destination. ([Destination Only]/[Dest.+Camera]/[Camera Only])

Save Image Size:
Selects the file size for images to be transferred to the smartphone or the computer when [Still Img. Save Dest.] is set to [Dest.+Camera]. The original-sized JPEG/HEIF file or a 2M-equivalent JPEG/HEIF file can be transferred. ([Original]/[2M])

RAW+J Save Image:
Selects the file type for images to be transferred to the smartphone or the computer when [Still Img. Save Dest.] is set to [Dest.+Camera] and [File Format] is set to [RAW & JPEG]. ([RAW & JPEG]/[JPEG Only]/[RAW Only])

RAW+H Save Image:
Selects the file type for images to be transferred to the smartphone or the computer when [Still Img. Save Dest.] is set to [Dest.+Camera] and [File Format] is set to [RAW & HEIF]. ([RAW & HEIF]/[HEIF Only]/[RAW Only])

Save JPEG Size/Save HEIF Size:
Use this item when sorting and saving JPEG/HEIF images with different image quality and image sizes to Slot 1 and Slot 2 by setting [Recording Media] to [Sort Recording].
Among the different sizes of image to be saved to Slot 1 and Slot 2, selects whether the larger or smaller size will be transferred to the smartphone or the computer when [Still Img. Save Dest.] is set to [Destination Only]/[Dest.+Camera]. ([Large Size]/[Small Size])

Note

- When an unrecordable memory card is inserted into the camera, you cannot record still images even if [Still Img. Save Dest.] is set to [Camera Only] or [Dest.+Camera].
- When [Camera Only] or [Dest.+Camera] is selected for [Still Img. Save Dest.] and no memory card is inserted into the camera, the shutter will not be released even if [Release w/o Card] is set to [Enable].
- While a still image is being played back on the camera, you cannot perform remote shooting using a smartphone or a computer.
- [RAW+J Save Image] and [RAW+H Save Image] can be set only when [File Format] under [Image Quality Settings] is set to [RAW & JPEG] or [RAW & HEIF].

Related Topic

- Using a smartphone as a remote commander
- Rec. Media Settings (still image/movie): Recording Media (still image)

5-043-036-16(1) Copyright 2022 Sony Corporation

USB Streaming (movie)

You can connect a computer, etc. to the camera and use the camera video and audio for livestreaming or web-conferencing services. Select MENU → (Setup) → [USB] → [USB Connection Mode] → [Sel. When Connect] or [USB Streaming] beforehand.

1. **MENU → (Network) → [Streaming] → [USB Streaming] → Set [Output Res/Frame Rate] and [Movie Rec During Streaming].**

2. **Connect the camera to a computer or other device with a USB cable.**

   [Streaming:Standby] will appear on the camera screen, and the camera will switch to the streaming standby state.

   - If [USB Connection Mode] is set to [Sel. When Connect], select [Live Stream(USB Streaming)] on the selection screen for the USB connection mode.
   - Use a cable or adapter that matches the terminal on the device to be connected.

3. **Start streaming from your livestreaming/web-conferencing service.**

   [Streaming:Output] will appear on the camera screen.

   - To exit USB Streaming, turn off the power of the camera or disconnect the USB cable.

Menu item details

Output Res/Frame Rate:
Sets the resolution and the frame rate of the video. ([4K(2160p)14.99p]/[4K(2160p)12.5p]/[HD(1080p)59.94p]/[HD(1080p) 50p]/[HD(1080p)29.97p]/[HD(1080p) 25p]/[HD(720p)29.97p]/[HD(720p) 25p])

Movie Rec During Streaming:
Sets whether or not to enable recording of the video to the recording media during streaming. ([Enable]/[Disable])

Hint

- If you assign the shutter speed, ISO sensitivity, etc. to the dial or control wheel or register them to the function menu, you can adjust these values even during USB streaming.
- The format of the streaming data is as follows.
  - Video format: MJPEG* or YUV420
    * When the resolution is set to HD (720p), only MJPEG is available.
  - Audio format: PCM, 48 kHz, 16 bit, 2 ch
- During USB streaming, power is supplied to the camera from the computer. If you want to consume as little computer power as possible, set [USB Power Supply] to [Off].
- When using an external microphone, you can minimize deviations between your voice and the movements of your mouth by connecting the microphone to the (microphone) terminal of the camera.

Note

- While USB streaming is in progress, the camera is always set to the movie recording mode regardless of the shooting mode before the start of streaming.
- You cannot do the following while USB Streaming is running.
  - Transition to the playback screen
  - Network functions (Remote Shooting, FTP transfer, remote operation from a smartphone, Bluetooth function, etc.)
- The following functions are disabled while USB Streaming is running.
  - Picture Profile
  - Power Save Start Time
- When you connect the camera to a device using the USB 2.0 standard, the resolution and frame rate of the streaming video become set to HD(720p)29.97p/HD (720p) 25p.
- If you change the settings for [File Format] or [Output Res/Frame Rate]/[Movie Rec During Streaming] under [USB Streaming] during USB streaming, the streaming screen may become paused. You may also need to resume streaming from an application depending on the livestreaming service.
- Depending on the temperature environment, output image quality setting for streaming, setting for movie recording during streaming, Wi-Fi connection environment, and usage conditions before the start of streaming, the internal temperature of the camera may rise, and the time available for streaming may become shorter.

Related Topic

- USB Connection Mode

5-043-036-16(1) Copyright 2022 Sony Corporation

Creators' Cloud

Creators' Cloud is a cloud solution that integrates production applications and services.
Creators' Cloud provides services and applications to creators of various productions.

The availability of Creators' Cloud and the supported services differ depending on the country/region.
For details on Creators' Cloud and the support status of each service, refer to the following website.
https://www.sony.net/cc/

5-043-036-16(1) Copyright 2022 Sony Corporation

Interchangeable Lens Digital Camera
ILME-FX30

Creating an account for Creators' Cloud and linking your camera to the account (Cloud Connection)

Create an account for the cloud service Creators' Cloud and link your camera to the account using Creators' App on your smartphone.
This function can be used when the camera's system software (firmware) is Ver.4.00 or later.

Note

- This function may only be available in certain countries and regions.
  For information about countries/regions where the service is supported, refer to the following website.
  https://creatorscloud.sony.net/catalog/servicearea.html

: Operations performed on the smartphone
: Operations performed on the camera

Preparing in advance

- Create an account for Creators' Cloud.
  Follow the instructions in the smartphone application Creators' App to create an account for Creators' Cloud.
- Pair the camera and smartphone.
  For detailed instructions, see "Pairing the camera with a smartphone (Smartphone Connection) ."
- Set [Wi-Fi Connect] and [Bluetooth Function] to [On] on the camera.

Linking the camera to the account

1. Set the camera to shooting mode.
2. Launch Creators' App on your smartphone, and then open the [Cameras] screen.
3. Select [Cloud Function], and then follow the instructions on the screen to start setup.
4. When you register the access point, select the access point you use and enter the password, and then select [OK].
   The settings for the access point (the SSID and the password) are loaded to the camera.
   - If the access point to be used is already registered on the camera, select [Skip] and proceed to step 5.
5. Select [Start linking] on the smartphone screen.
   - The camera and the account will be linked. Then, follow the instructions on the screen to configure the image upload settings.
   - The camera may not be linked to the account if there is already account information on the camera or there is already camera information in Creators' Cloud. Remove the account and camera information before linking the camera to the account.

Note

- The camera may not be linked to the account properly if the procedure is canceled, the camera is powered off, or a network error, etc. occurs during the procedure. In this case, make sure that the account information on the camera or the camera information in

Creators' Cloud is correct. If the information is not correct, remove the information and link the camera to the account again.

- Linking the camera to the account or connecting to Creators' Cloud may fail if the time setting on the camera is not correct. Make sure that the time setting is correct.

Connecting the camera to Creators' Cloud

1. MENU → (Network) → [Creators' Cloud] → [Cloud Connection] → [On].

To upload images on the camera to Creators' Cloud

Once the camera has been linked to the account for Creators' Cloud and [Cloud Upload] is turned on in Creators' App, you can connect to the server and upload images by simply setting [Cloud Connection] to [On].
Newly recorded images will be uploaded the next time you turn on the camera and connect to Creators' Cloud. Turn on the camera at the timing you want to upload.
For details, refer to the following website.
https://www.sony.net/ca/help/opr/

To cancel the linkage of the camera with Creators' Cloud

You need to cancel the linkage of the camera with the account both on the camera and in Creators' Cloud.
Operations on the camera:

1. MENU → (Network) → [Creators' Cloud] → [Cloud Information].
2. Select [Detail] in [Account Info.].
3. Select [Delete account info.].
4. Check the message displayed on the screen and select [OK].
   The information for the account will be removed from the camera.

Operations on the Creators' Cloud:

1. Open [Cameras] screen on Creators' App.
2. Select [Cloud Function] → [Disconnect the Link].
   The information for the camera will be removed from the account.

Hint

- You can also perform the following operations in Creators' Cloud Web (https://www.sony.net/capp/).
  - Creating an account for Creators' Cloud
  - Removing information of the camera from Creators' Cloud

Note

- To ensure a secure wireless LAN connection, we strongly recommend using an access point with WPA3 or WPA2 security settings. Connecting to an access point without security settings may result in hacking, access from malicious third parties, or attacks on vulnerabilities. Unless there is a specific reason, we do not recommend using an access point without security settings.

Related Topic

- Pairing the camera with a smartphone (Smartphone Connection)
- Displaying cloud connection information (Cloud Information)
- Notes on using the cloud service (Creators' Cloud)

5-043-036-16(1) Copyright 2022 Sony Corporation

Displaying cloud connection information (Cloud Information)

Displays information about the camera and Creators' Cloud linkage account and the cloud connection.
This function can be used when the camera's system software (firmware) is Ver.4.00 or later.

Note

- This function may only be available in certain countries and regions.
  For information about countries/regions where the service is supported, refer to the following website.
  https://creatorscloud.sony.net/catalog/servicearea.html

1. **MENU → (Network) → [Creators' Cloud] → [Cloud Information].**

Displayed item details

Account Info.:
Displays detailed information about the linked account when [Detail] is selected.
Selecting [Delete account info.] on the displayed screen removes the account information from the camera.
If you delete the Creators' Cloud account information from the camera, be sure to delete the camera information from Creators' Cloud as well.

Error Info.:
Displays error details when a network connection error occurs.

SSID:
The SSID of the connected access point is displayed.

5-043-036-16(1) Copyright 2022 Sony Corporation

Notes on using the cloud service (Creators' Cloud)

Before lending or transferring the camera, make sure that the camera linkage information and upload settings are appropriate to prevent damage such as the content on the camera being uploaded to an unintended third party's Creators' Cloud. If the settings are not appropriate, be sure to perform the following operations.

- If you will transfer or lend the camera: initialize the camera or cancel the linkage with Creators' Cloud on the camera. Also, cancel the camera linkage in Creators' Cloud.
- If the camera is transferred to you or you borrow the camera: initialize the camera or cancel the linkage with Creators' Cloud on the camera.

Note that Creators' Cloud may only be available in certain countries and regions.

Notes on the network environment

The following network environments may interfere with the use of Creators' Cloud.

- Connecting to a network via a proxy server
- Configuring a firewall to your network
  If a firewall is configured, open the following outbound ports in the firewall settings.
  - TCP Source Port 32768-60999, Destination Port 443
  - TCP Source Port 32768-60999, Destination Port 80
  - UDP Source Port 32768-60999, Destination Port 53
  - UDP Source Port 32768-60999, Destination Port 443
  - UDP Source Port 32768-60999, Destination Port 32768-60999

- TCP destination port 80 is used unencrypted to obtain revocation information needed for destination server validation when connecting to the server. However, no personal information is sent.
- UDP destination port 53 is used unencrypted to obtain information needed to verify the server's address on the internet when connecting to the server. However, no personal information is sent.

Related Topic

- Creating an account for Creators' Cloud and linking your camera to the account (Cloud Connection)
- Displaying cloud connection information (Cloud Information)

5-043-036-16(1) Copyright 2022 Sony Corporation

Audio accessories compatible with the Multi Interface Shoe

If you shoot movies with an audio accessory (sold separately) attached to the Multi Interface Shoe of the camera, analog or digital audio will be recorded via the Multi Interface Shoe.
If you use an audio accessory that supports the digital audio interface, the sound signals will be transmitted in a digital format. This will allow you a wider range of recordable audio quality, such as the following.

- High-quality audio recording with less deterioration
- 4-channel or 24-bit audio recording

The recordable audio quality differs depending on the audio accessory. For details, refer to the instruction manual for the audio accessory.

Hint

- You can change the audio settings for audio accessories that support the digital audio interface using [Shoe Audio Set.].

Note

- Movies recorded with 24-bit audio may not be played back normally on devices or software incompatible with 24-bit audio, resulting in unexpectedly loud volumes or no sound.

Related Topic

- Shoe Audio Set.
- HDMI Output Settings (movie)
- 4ch Audio Monitoring (movie)
- Audio Out Timing
- Audio Recording

5-043-036-16(1) Copyright 2022 Sony Corporation

Mount Adaptor

Using a Mount Adaptor (sold separately), you can attach an A-mount lens (sold separately) to this product.
For details, refer to the operating instructions supplied with the Mount Adaptor.

Note

- You may not be able to use the Mount Adaptor or auto-focus with certain lenses.
- The sound of the lens and the product in operation may be recorded during movie recording.
  You can turn the sound off by selecting MENU → (Shooting) → [Audio Recording] → [Audio Recording] → [Off].
- It may take a long time or may be difficult for the product to focus, depending on the lens used or the subject.

Related Topic

- LA-EA3/LA-EA5 Mount Adaptor
- LA-EA4 Mount Adaptor

5-043-036-16(1) Copyright 2022 Sony Corporation

LA-EA3/LA-EA5 Mount Adaptor

If you use the LA-EA3 Mount Adaptor (sold separately) or LA-EA5 Mount Adaptor (sold separately), the following functions are available.

Autofocus:
LA-EA3: Available with SAM/SSM lens only
LA-EA5: Available with A-mount AF lenses* (For lenses other than SAM and SSM, autofocus is driven by the LA-EA5 AF coupler.)

* Autofocus is not available with some Minolta/Konica Minolta lenses and teleconverters.

AF system:
Phase Detection AF
AF/MF select:
Can be changed using the operating switch on the lens.
Focus Mode:
Single-shot AF/Automatic AF/Continuous AF/Direct manual focus (DMF)/Manual Focus

- When using a Mount Adaptor in the movie mode, adjust the aperture value and the focus manually.

Available focus area:
[Wide]/[Zone]/[Center Fix]/[Spot]/[Expand Spot]/[Tracking]
SteadyShot:
In-body

Related Topic

- Mount Adaptor
- LA-EA4 Mount Adaptor

5-043-036-16(1) Copyright 2022 Sony Corporation

LA-EA4 Mount Adaptor

If you use the LA-EA4 Mount Adaptor (sold separately), the following functions are available.

Autofocus:
Not available.

- Only the manual focusing mode is supported.

SteadyShot:
In-body

Related Topic

- Mount Adaptor
- LA-EA3/LA-EA5 Mount Adaptor

5-043-036-16(1) Copyright 2022 Sony Corporation

Interchangeable Lens Digital Camera
ILME-FX30

Multi Battery Adaptor Kit

You can use the Multi Battery Adaptor Kit (sold separately) with this camera to shoot for long periods. When using the Multi Battery Adaptor Kit, remove the camera's battery cover.
For details, refer also to the operating instructions supplied with the Multi Battery Adaptor Kit.

To remove the battery cover

Pull the battery cover release lever **(A)** in the direction of the arrow, and then remove the battery cover.

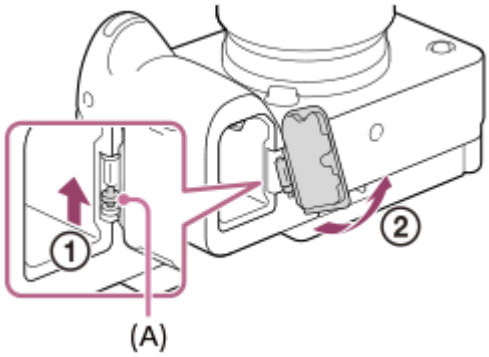

To attach the battery cover

Insert the shaft on one side of the battery cover into the attachment site, and then push in the battery cover by attaching the shaft on the opposite side.

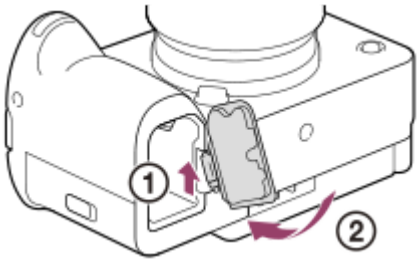

Note

- While the plug-in plate of the Multi Battery Adaptor Kit is inserted in the camera, do not slide the battery lock lever of the camera. The plug-in plate will be ejected from the camera if you do so.

5-043-036-16(1) Copyright 2022 Sony Corporation

Battery life and number of recordable images

Number of recordable images when shooting still images

Approx. 570 images

Battery life when shooting movies

Actual shooting of movies	Approx. 115 min.
Continuous shooting of movies	Approx. 175 min.

- The above estimates for battery life and number of recordable images apply when the battery pack has been fully charged. The battery life and number of images may decrease depending on the conditions of use.
- The battery life and number of recordable images are estimates based on shooting with the default settings under the following conditions:
  - Using the battery pack at an ambient temperature of 25°C (77°F).
  - Using a Sony CFexpress Type A memory card (sold separately)
  - Using a E PZ 18-105mm F4 G OSS lens (sold separately)
- The numbers of recordable still images are based on the CIPA standard and shooting under the following conditions: (CIPA: Camera & Imaging Products Association)
  - One picture is taken every 30 seconds.
  - The power is turned on and off once every ten times.
- The number of minutes for movie shooting is based on the CIPA standard and shooting under the following conditions:
  - The image quality is set to XAVC S HD 59.94p 50M /50p 50M 4:2:0 8bit.
  - Actual shooting (movies): Battery life based on repeated shooting, zooming, shooting stand-by, turning on/off, etc.
  - Continuous shooting (movies): No operations other than starting and ending shooting are performed.

5-043-036-16(1) Copyright 2022 Sony Corporation

Number of recordable images

When you insert a memory card into the camera and turn the camera on, the number of images that can be recorded (should you continue to shoot using the current settings) is displayed on the screen.

Note

- A maximum of 40 000 still images can be recorded to each memory card. If the number of recorded images reaches the upper limit, replace the memory card.
- When “0” (the number of recordable images) flashes in orange, the memory card is full or the number of recorded images exceeds the number that can be managed using the database file. Replace the memory card with another one, or delete images from the current memory card. When you transfer images on a memory card to a computer, etc., the number of recordable images may be displayed as “0”. In this case, you may be able to record images by executing [Recover Image DB].
- When “NO CARD” flashes in orange, it means no memory card has been inserted. Insert a memory card.

The number of images that can be recorded on a memory card

The table below shows the approximate number of images that can be recorded on a memory card formatted with this camera.
The numbers shown reflect the following conditions:

- Using a Sony memory card
- [Aspect Ratio] is set to [3:2], and [JPEG Image Size]/[HEIF Image Size] is set to [L: 26M]. *1

The values may vary depending on the shooting conditions and the type of memory card used.

(Unit: images)

JPEG Quality/HEIF Quality/ File Format	SD memory card		CFexpress Type A memory card	
	64 GB	128 GB	80 GB	160 GB
JPEG Light	13 000	26 000	15 000	30 000
JPEG Standard	9 200	18 000	10 000	21 000
JPEG Fine	6 500	13 000	7 500	15 000
JPEG Extra fine	3 200	6 500	3 800	7 600
HEIF Light	17 000	34 000	20 000	38 000
HEIF Standard	13 000	26 000	15 000	30 000
HEIF Fine	9 000	19 000	11 000	22 000
HEIF Extra fine	6 900	13 000	8 100	16 000
RAW & JPEG *2	1 300	2 700	1 500	3 100
RAW & HEIF *2	1 400	2 900	1 700	3 400
RAW	1 700	3 400	2 000	4 000

*1 When [Aspect Ratio] is set to other than [3:2], you can record more images than the numbers shown in the table above. (except when [RAW] is selected)

*2 JPEG image quality when [RAW & JPEG] is selected: [Fine]
HEIF image quality when [RAW & HEIF] is selected: [Fine]

Note

- Even if the number of recordable images is higher than 9 999 images, “9999” will appear.

Related Topic

- Memory cards that can be used

5-043-036-16(1) Copyright 2022 Sony Corporation

Recordable movie times

The table below shows the approximate total recording times using a memory card formatted with this camera. The values may vary depending on the shooting conditions and the type of memory card used.

(h (hour), min (minute))

File Format	Rec Frame Rate	Record Setting	SD memory card		CFexpress Type A memory card	
			64 GB	128 GB	80 GB	160 GB
XAVC HS 4K	59.94p/50p	200M	30 min	1 h 10 min	40 min	1 h 20 min
		150M	45 min	1 h 30 min	50 min	1 h 40 min
		100M	1 h	2 h 10 min	1 h 15 min	2 h 30 min
		75M	1 h 20 min	2 h 50 min	1 h 35 min	3 h 10 min
		45M	2 h	4 h 10 min	2 h 20 min	4 h 50 min
XAVC S 4K	59.94p/50p	200M	30 min	1 h 10 min	40 min	1 h 20 min
		150M	45 min	1 h 30 min	50 min	1 h 40 min
XAVC S HD	59.94p/50p	50M	1 h 50 min	3 h 50 min	2 h 10 min	4 h 30 min
		25M	3 h	6 h 10 min	3 h 30 min	7 h 10 min
XAVC S-I 4K	59.94p	600M	10 min	25 min	10 min	25 min
	50p	500M	10 min	30 min	15 min	35 min
XAVC S-I HD	59.94p	222M	30 min	1 h 5 min	35 min	1 h 15 min
	50p	185M	35 min	1 h 15 min	40 min	1 h 30 min
XAVC S-I DCI 4K*	59.94p	600M	10 min	25 min	10 min	25 min
	50p	500M	10 min	25 min	10 min	25 min

The recording times when [Px Proxy Recording] is set to [Off].

* When the camera's system software (firmware) version is Ver.2.00 or later

- The times shown are recordable times using a Sony memory card.
- The duration of time available for movie recording varies depending on the file format/recording settings for movies, memory card, ambient temperature, Wi-Fi network environment, condition of the camera before you start recording, and condition of the charging of the battery.
  The maximum continuous recording time for a single movie shooting session is approximately 13 hours (a product specification limit).

Note

- The recordable time of movies varies because the camera is equipped with VBR (Variable Bit-Rate), which automatically adjusts image quality depending on the shooting scene. When you record a fast-moving subject, the image is clearer but the recordable time is shorter because more memory is required for recording. The recordable time also varies depending on the shooting conditions, the subject or the image quality/size settings.

Notes on continuous movie recording

- High-quality movie recording and high-speed continuous shooting require large amounts of power. Therefore, if you continue to shoot, the temperature inside the camera will rise, especially that of the image sensor. In such cases, the camera will turn off automatically because the surface of the camera is heated to a high temperature or the high temperature affects the quality of the images or the internal mechanism of the camera.
- The duration of time available for continuous movie recording when the camera records with the default settings after the power has been turned off for a while is as follows. The values indicate the continuous time from when the camera starts recording until the camera stops recording.

When [Auto Power OFF Temp.] is set to [Standard]

File Format	XAVC S HD	XAVC S 4K
Ambient temperature: 25°C (77°F)	Approx. 120 minutes	Approx. 30 minutes
Ambient temperature: 40°C (104°F)	Approx. 120 minutes	Approx. 30 minutes

When [Auto Power OFF Temp.] is set to [High]

File Format	XAVC S HD	XAVC S 4K
Ambient temperature: 25°C (77°F)	Approx. 120 minutes	Approx. 60 minutes
Ambient temperature: 40°C (104°F)	Approx. 120 minutes	Approx. 60 minutes

XAVC S HD: 59.94p 50M/50p 50M 4:2:0 8bit; when the camera is not connected via Wi-Fi; when using a CFexpress Type A memory card; when the monitor is open
XAVC S 4K: 59.94p 150M/50p 150M 4:2:0 8bit; when the camera is not connected via Wi-Fi; when using a CFexpress Type A memory card; when the monitor is open

- The duration of time available for movie recording varies with the temperature, file format/record setting for movies, Wi-Fi network environment, or condition of the camera before you start recording. If you frequently recompose or shoot images after the power is turned on, the temperature inside the camera will rise and the recording time available will be shorter.
- If the (Overheating warning) icon appears, the temperature of the camera has risen.
- If the camera stops movie recording due to a high temperature, leave it for some time with the power turned off. Start recording after the temperature inside the camera drops fully.
- If you observe the following points, you will be able to record movies for longer periods of time.
  - Keep the camera out of direct sunlight.

- Turn the camera off when it is not being used.

Related Topic

- Memory cards that can be used
- Battery life and number of recordable images

5-043-036-16(1) Copyright 2022 Sony Corporation

Interchangeable Lens Digital Camera
ILME-FX30

List of icons on the screen for shooting movies

The displayed contents and their positions in the illustrations are just guidelines, and may differ from the actual displays. Also, the displayed contents may vary depending on your camera's system software (firmware) version.
Descriptions are given below the indications of the icons.

1. **Basic camera settings**

Audio level

OFF
Audio recording off

AF-C MF
Focus Mode

C D
Clear Image Zoom/Digital Zoom

STBY REC
Movie recording standby/Movie recording in progress

1:00:12
Actual movie recording time (hours: minutes: seconds)

4K HD D-4K
File format of movies

119.88p 100p 59.94p 50p 29.97p 25p 23.98p 24.00p
Frame rate of movies

Fixed-59.94 fps / 15 fps (59.94p)
Frame rate of movies (when [Fixed/Variable Select] under [FPS] is set to [Fixed] / [Variable])

1 2 1 2
Memory card for recording / Not memory card for recording

NO CARD
No memory card inserted

1 2 1 2 1 2 1 2
Nearing the rewriting upper limit of the memory card / Rewriting upper limit of the memory card reached

1h 30m
Recordable time of movies

3
Writing data / Number of images left to write

100%
Remaining battery

Remaining battery warning

USB power supply

2. **Exposure and other settings**

1/250 A 1/250 180.0

Shutter speed / Shutter angle

F3.5 A F3.5

Aperture value

M.M.

Exposure compensation/Metered Manual

ISO400 A ISO 400

ISO sensitivity

800EI / 6.0E / L

Exposure Index/Base ISO

AWB AWB AWB -1 0 +1 +2 **7500K A5 G5**

White Balance (Auto, Preset, Underwater Auto, Custom, Color temperature, Color filter)

AWB L

AE lock/AWB lock

3. **Other settings (displayed during recording standby)**

P A S M F S&Q P S&Q A S&Q S S&Q M S&Q F

Shooting mode

MR1 M S&Q M2 S

Shooting mode (MR Recall Camera Setting)

Tripod recognition

REC STBY

REC Control

EXT 4K EXT RAW EXT DCI 4K

4K/RAW/DCI 4K external output

EXT-LK

External lock state of the time code

00:00:00.00

Time code (hours: minutes: seconds. frames)

00 00 00 00

User Bit

Spot Focus

Performing [Spot Focus]

x4 Slow x4 Quick

Slowness/quickness scale during slow-motion/quick-motion shooting

S-log3 s709 709(800%) User1 LUT OFF

LUT

Assist S-Log3 Assist HLG 709 Assist HLG 2020

Gamma Disp. Assist Typ.

Starting/stopping network streaming output

High / Standard / Low / HD (1080p) 59.94p 9.0M

Image quality setting for network streaming output

Streaming : Standby / Output / Connecting / Connect. Err./ Not Connect

Network streaming status

4K(2160p) 14.99p / 4K(2160p) 12.5p / HD(1080p) 59.94p / HD(1080p) 50p / HD(1080p) 29.97p / HD(1080p) 25p / HD(720p) 29.97p / HD(720p) 25p

USB streaming output format

Streaming : Standby / Streaming : Output

USB streaming status

Tracking Cancel

Guide display for tracking

Focus Cancel

Guide display for canceling focusing

48khz/16bit 2ch 48khz/24bit 2ch 48khz/24bit 4ch

Audio format

Av Tv ISO

Guide display for dials

OFF

Touch function in shooting mode (Touch focus/Touch tracking/off)

Focus Cancel

Tracking Cancel

Remote Shooting (connected) / Remote Shooting (connection error)

Connected to the cloud/Communicating with the cloud/Cloud connection error

FTP FTP FTP FTP

Connected with FTP / FTP communication in progress / FTP connection error

Transferring to smartphone / Transfer error

Airplane Mode

Connected to Wi-Fi (via a Wi-Fi access point)

Disconnected from Wi-Fi (via a Wi-Fi access point)

Wi-Fi Wi-Fi

Connected to Wi-Fi/Disconnected from Wi-Fi (Wi-Fi Direct)

LAN LAN

Connected to LAN/Disconnected from LAN (When using a USB-LAN conversion adaptor)

Bluetooth connection available / Bluetooth connection unavailable

Remote control

Obtaining location information / Location information cannot be obtained

STD L

Metering Mode

D-R OFF DRO AUTO

D-Range Optimizer

Histogram

Digital level gauge

Overheating warning

FULL ERROR

Database file full / Database file error

Cooling fan malfunction warning

Related Topic

- List of icons on the screen for shooting still images
- List of icons on the playback screen

5-043-036-16(1) Copyright 2022 Sony Corporation

Interchangeable Lens Digital Camera
ILME-FX30

List of icons on the screen for shooting still images

The displayed contents and their positions in the illustrations are just guidelines, and may differ from the actual displays. Also, the displayed contents may vary depending on your camera's system software (firmware) version.
Descriptions are given below the indications of the icons.

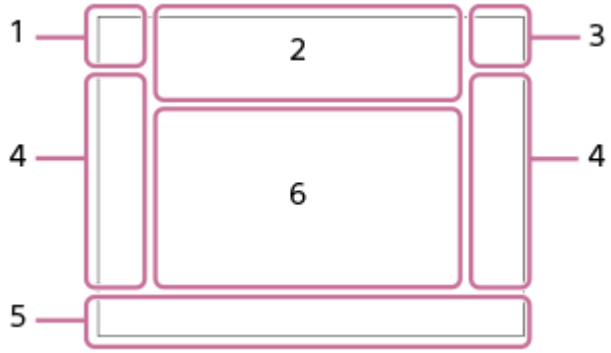

1. **Shooting mode/Scene recognition**

   iP P* A S M
   Shooting mode

   M1 P
   Shooting mode (MR Recall Camera Setting)

   Scene Recognition icons

2. **Camera settings**

   1 2 1 2
   Memory card for recording / Not memory card for recording

   NO CARD
   No memory card inserted

   1 2 1 2 1 2 1 2
   Nearing the rewriting upper limit of the memory card / Rewriting upper limit of the memory card reached

   100
   Remaining number of recordable images

   3
   Writing data / Number of images left to write

   26M / 23M / 22M / 17M / 13M / 11M / 8.5M / 6.4M / 5.7M / 5.4M / 4.3M
   Image size of still images

   RAW
   RAW recording

   J-X.FINE J-FINE J-STD J-LIGHT H-X.FINE H-FINE H-STD H-LIGHT
   JPEG Quality / HEIF Quality

   4:2:2
   Color sampling for HEIF

   VIEW
   Setting Effect OFF

   OFF ON ON
   SteadyShot off/on, Camera shake warning

   8mm 8mm

SteadyShot focal length / Camera shake warning

Optical zoom only /Clear Image Zoom/Digital Zoom

Remote Shooting (connected) / Remote Shooting (connection error)

Bright Monitoring

Silent mode

Remote control

Connected to the cloud/Communicating with the cloud/Cloud connection error

Connected with FTP / FTP communication in progress / FTP connection error

Transferring to smartphone / Transfer error

Connected to Wi-Fi (via a Wi-Fi access point)

Disconnected from Wi-Fi (via a Wi-Fi access point)

Connected to Wi-Fi/Disconnected from Wi-Fi (Wi-Fi Direct)

Connected to LAN/Disconnected from LAN (When using a USB-LAN conversion adaptor)

Writing copyright information [On]

Writing IPTC information [On]

Touch function in shooting mode (Touch focus/Touch tracking/Touch shutter/off)

Focus Cancel

Tracking Cancel

Bluetooth connection available / Bluetooth connection unavailable

Obtaining location information / Location information cannot be obtained

Airplane Mode

Overheating warning

Database file full / Database file error

Tripod recognition

3. **Battery**

Remaining battery

Remaining battery warning

USB power supply

4. **Shooting settings**

Drive Mode

AF-S AF-A AF-C DMF MF

Focus Mode

Focus Area

Metering Mode

AWB 7500K A5 G5

White Balance (Auto, Preset, Underwater Auto, Custom, Color temperature, Color filter)

D-Range Optimizer

Creative Look

Face/Eye Prior. in AF/ Face/Eye Subject

PP1 – PP11

Picture Profile

[1st Zoom Spd. STBY] under [Zoom Lever Speed]

5. **Focus indicator/exposure settings**

Focus indicator

1/250

Shutter speed

F3.5

Aperture value

Exposure compensation/Metered Manual

ISO400 ISO AUTO

ISO sensitivity

AE lock/AWB lock

6. **Guides/other**

Tracking Cancel

Guide display for tracking

Focus Cancel

Guide display for canceling focusing

Guide display for dials

Bracket indicator

Spot metering area

Histogram

Digital level gauge

Related Topic

- List of icons on the screen for shooting movies
- List of icons on the playback screen

5-043-036-16(1) Copyright 2022 Sony Corporation

Interchangeable Lens Digital Camera
ILME-FX30

List of icons on the playback screen

The displayed contents and their positions in the illustrations are just guidelines, and may differ from the actual displays. Also, the displayed contents may vary depending on your camera's system software (firmware) version.
Descriptions are given below the indications of the icons.

Single-image playback

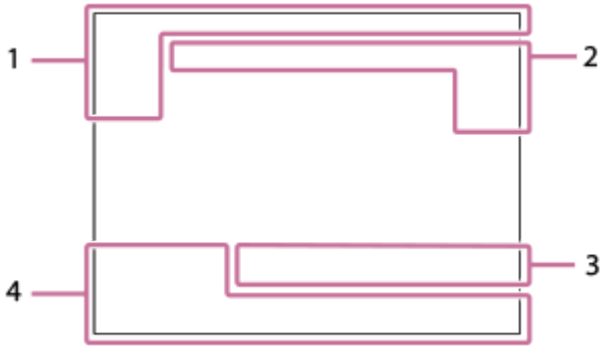

Histogram display

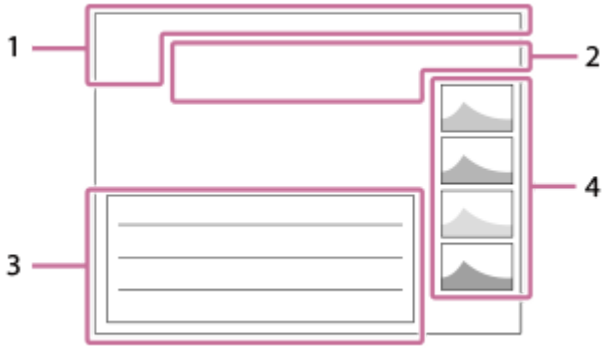

1. **Basic information**

   1 2
   Playback media

   IPTC
   IPTC Information

   Rating

   OK NG KP
   Clip Flag

   Protect

   3/7
   File number/Number of images in the view mode

   Remaining battery

   Display as Group

   Px
   Proxy movie included

S
Shot Mark included

FTP transfer status

Smartphone transfer status (when using [Select on Cam & Send])

2. **Camera settings**

Connected to the cloud/Communicating with the cloud/Cloud connection error

FTP FTP FTP FTP

Connected with FTP / FTP communication in progress / FTP connection error

Transferring to smartphone / Transfer error

Connected to Wi-Fi (via a Wi-Fi access point)

Disconnected from Wi-Fi (via a Wi-Fi access point)

Wi-Fi Wi-Fi

Connected to Wi-Fi/Disconnected from Wi-Fi (Wi-Fi Direct)

LAN LAN

Connected to LAN/Disconnected from LAN (When using a USB-LAN conversion adaptor)

Bluetooth connection available / Bluetooth connection unavailable

Airplane Mode

Overheating warning

FULL ERROR

Database file full / Database file error

3. **Shooting settings**

3:2 4:3 16:9 1:1

Aspect ratio

26M / 23M / 22M / 17M / 13M / 11M / 8.5M / 6.4M / 5.7M / 5.4M / 4.3M

Image size of still images

RAW

RAW recording

J-X.FINE J-FINE J-STD J-LIGHT H-X.FINE H-FINE H-STD H-LIGHT

JPEG Quality/HEIF Quality

4:2:2

Color sampling for HEIF

XAVC HS 4K XAVC S 4K XAVC S HD XAVC S-I 4K XAVC S-I HD XAVC S-I DCI 4K

File format of movies

119.88p 100p 59.94p 50p 29.97p 25p 23.98p 24.00p

Frame rate of movies

600 500 300 280 250 240 222 200 185 150 140 111 100 93
89 75 60 50 45 30 25 16

Record setting of movies

1/250

Shutter speed

F3.5

Aperture value

ISO400

ISO sensitivity

P A S M

Exposure mode

Exposure compensation

Metering Mode

35mm

Lens focal length

Creative Look

AWB 7500K A5 G5

White Balance (Auto, Preset, Underwater Auto, Color temperature, Color filter)

D-R OFF DRO AUTO

D-Range Optimizer

HLG

HDR recording (Hybrid Log-Gamma)

Copyright information exists for image

4. **Image information**

Latitude/longitude information

2022-1-1 10:37:00PM

Date of recording

100-0003

Folder number - file number

C0003

Movie file number

Histogram (Luminance/R/G/B)

Related Topic

- List of icons on the screen for shooting movies
- List of icons on the screen for shooting still images

5-043-036-16(1) Copyright 2022 Sony Corporation

Interchangeable Lens Digital Camera
ILME-FX30

List of default setting values

The default setting values for each menu item at the time of purchase are shown in the following table.
The content of the menu displayed on the screen differs depending on the shooting mode. For details, refer to "Finding functions from MENU."

To reset settings to the default values

Select MENU → (Setup) → [Reset/Save Settings] → [Setting Reset] → [Camera Settings Reset] or [Initialize] → [Enter].
The items that can be reset using [Camera Settings Reset] are limited. See the following tables. If you select [Initialize], all the settings of the camera will be reset to the default values.

/ (Shooting)

MENU items	Default setting value	Resettable using [Camera Settings Reset]
JPEG/HEIF Switch	JPEG	✓
Image Quality Settings (File Format)	JPEG/HEIF	✓
Image Quality Settings (JPEG Quality/HEIF Quality)	Fine	✓
Image Quality Settings (JPEG Image Size/HEIF Image Size) (when [Aspect Ratio] is set to [3:2])	L: 26M	✓
Image Quality Settings (JPEG Image Size/HEIF Image Size) (when [Aspect Ratio] is set to [4:3])	L: 23M	✓
Image Quality Settings (JPEG Image Size/HEIF Image Size) (when [Aspect Ratio] is set to [16:9])	L: 22M	✓
Image Quality Settings (JPEG Image Size/HEIF Image Size) (when [Aspect Ratio] is set to [1:1])	L: 17M	✓
Aspect Ratio	3:2	✓
File Format	XAVC S HD	✓
Movie Settings (Rec Frame Rate) (when [File Format] is set to [XAVC HS 4K])	59.94p/50p	✓
Movie Settings (Rec Frame Rate) (when [File Format] is set to [XAVC S 4K])	59.94p/50p	✓
Movie Settings (Rec Frame Rate) (when [File Format] is set to [XAVC S HD])	59.94p/50p	✓
Movie Settings (Rec Frame Rate) (when [File Format] is set to [XAVC S-I 4K])	59.94p/50p	✓
Movie Settings (Rec Frame Rate) (when [File Format] is set to [XAVC S-I HD])	59.94p/50p	✓

MENU items	Default setting value	Resettable using [Camera Settings Reset]
▶■ Movie Settings (Rec Frame Rate) (when [▶■ File Format] is set to [XAVC S-I DCI 4K]	24.00p	✓
▶■ Movie Settings (Record Setting) (when [▶■ File Format] is set to [XAVC HS 4K], and [Rec Frame Rate] is set to [59.94p]/[50p])	45M 4:2:0 10bit	✓
▶■ Movie Settings (Record Setting) (when [▶■ File Format] is set to [XAVC HS 4K], and [Rec Frame Rate] is set to [23.98p])	50M 4:2:0 10bit	✓
▶■ Movie Settings (Record Setting) (when [▶■ File Format] is set to [XAVC HS 4K], and [Rec Frame Rate] is set to [119.88p]/[100p])	200M 4:2:0 10bit	✓
▶■ Movie Settings (Record Setting) (when [▶■ File Format] is set to [XAVC S 4K], and [Rec Frame Rate] is set to [59.94p]/[50p])	150M 4:2:0 8bit	✓
▶■ Movie Settings (Record Setting) (when [▶■ File Format] is set to [XAVC S 4K], and [Rec Frame Rate] is set to [29.97p]/[25p])	60M 4:2:0 8bit	✓
▶■ Movie Settings (Record Setting) (when [▶■ File Format] is set to [XAVC S 4K], and [Rec Frame Rate] is set to [23.98p])	60M 4:2:0 8bit	✓
▶■ Movie Settings (Record Setting) (when [▶■ File Format] is set to [XAVC S 4K], and [Rec Frame Rate] is set to [119.88p]/[100p])	200M 4:2:0 8bit	✓
▶■ Movie Settings (Record Setting) (when [▶■ File Format] is set to [XAVC S HD], and [Rec Frame Rate] is set to [59.94p]/[50p])	50M 4:2:0 8bit	✓
▶■ Movie Settings (Record Setting) (when [▶■ File Format] is set to [XAVC S HD], and [Rec Frame Rate] is set to [29.97p]/[25p])	50M 4:2:0 8bit	✓
▶■ Movie Settings (Record Setting) (when [▶■ File Format] is set to [XAVC S HD], and [Rec Frame Rate] is set to [23.98p])	50M 4:2:0 8bit	✓
▶■ Movie Settings (Record Setting) (when [▶■ File Format] is set to [XAVC S HD], and [Rec Frame Rate] is set to [119.88p]/[100p])	60M 4:2:0 8bit	✓
▶■ Movie Settings (Record Setting) (when [▶■ File Format] is set to [XAVC S-I 4K], and [Rec Frame Rate] is set to [59.94p]/[50p])	600M 4:2:2 10bit/500M 4:2:2 10bit	✓
▶■ Movie Settings (Record Setting) (when [▶■ File Format] is set to [XAVC S-I 4K], and [Rec Frame Rate] is set to [29.97p]/[25p])	300M 4:2:2 10bit/250M 4:2:2 10bit	✓
▶■ Movie Settings (Record Setting) (when [▶■ File Format] is set to [XAVC S-I 4K], and [Rec Frame Rate] is set to [23.98p])	240M 4:2:2 10bit	✓

MENU items	Default setting value	Resettable using [Camera Settings Reset]
▶■ Movie Settings (Record Setting) (when [▶■ File Format] is set to [XAVC S-I HD], and [Rec Frame Rate] is set to [59.94p]/[50p])	222M 4:2:2 10bit/185M 4:2:2 10bit	✓
▶■ Movie Settings (Record Setting) (when [▶■ File Format] is set to [XAVC S-I HD], and [Rec Frame Rate] is set to [29.97p]/[25p])	111M 4:2:2 10bit/93M 4:2:2 10bit	✓
▶■ Movie Settings (Record Setting) (when [▶■ File Format] is set to [XAVC S-I HD], and [Rec Frame Rate] is set to [23.98p])	89M 4:2:2 10bit	✓
▶■ Movie Settings (Record Setting) (when [▶■ File Format] is set to [XAVC S-I DCI 4K], and [Rec Frame Rate] is set to [59.94p]/[50p])	600M 4:2:2 10bit/500M 4:2:2 10bit	✓
▶■ Movie Settings (Record Setting) (when [▶■ File Format] is set to [XAVC S-I DCI 4K], and [Rec Frame Rate] is set to [29.97p]/[25p])	300M 4:2:2 10bit/250M 4:2:2 10bit	✓
▶■ Movie Settings (Record Setting) (when [▶■ File Format] is set to [XAVC S-I DCI 4K], and [Rec Frame Rate] is set to [23.98p])	240M 4:2:2 10bit	✓
▶■ Movie Settings (Record Setting) (when [▶■ File Format] is set to [XAVC S-I DCI 4K], and [Rec Frame Rate] is set to [24.00p])	240M 4:2:2 10bit	✓
S&Q S&Q Settings (S&Q Rec Frame Rate) (when [▶■ File Format] is set to [XAVC HS 4K])	59.94p/50p	✓
S&Q S&Q Settings (S&Q Rec Frame Rate) (when [▶■ File Format] is set to [XAVC S 4K])	59.94p/50p	✓
S&Q S&Q Settings (S&Q Rec Frame Rate) (when [▶■ File Format] is set to [XAVC S HD])	59.94p/50p	✓
S&Q S&Q Settings (S&Q Rec Frame Rate) (when [▶■ File Format] is set to [XAVC S-I 4K])	59.94p/50p	✓
S&Q S&Q Settings (S&Q Rec Frame Rate) (when [▶■ File Format] is set to [XAVC S-I HD])	59.94p/50p	✓
S&Q S&Q Settings (S&Q Rec Frame Rate) (when [▶■ File Format] is set to [XAVC S-I DCI 4K])	24.00p	✓
S&Q S&Q Settings (S&Q Frame Rate) (when [▶■ File Format] is set to a format other than [XAVC S-I DCI 4K])	120fps/100fps	✓
S&Q S&Q Settings (S&Q Frame Rate) (when [▶■ File Format] is set to [XAVC S-I DCI 4K])	24fps	✓
S&Q S&Q Settings (S&Q Record Setting) (when [▶■ File Format] is set to [XAVC HS 4K], and [S&Q Rec Frame Rate] is set to [59.94p]/[50p])	45M 4:2:0 10bit	✓

MENU items	Default setting value	Resettable using [Camera Settings Reset]
S&Q S&Q Settings (S&Q Record Setting) (when [File Format] is set to [XAVC HS 4K], and [S&Q Rec Frame Rate] is set to [23.98p])	50M 4:2:0 10bit	✓
S&Q S&Q Settings (S&Q Record Setting) (when [File Format] is set to [XAVC HS 4K], and [S&Q Rec Frame Rate] is set to [119.88p]/[100p])	200M 4:2:0 10bit	✓
S&Q S&Q Settings (S&Q Record Setting) (when [File Format] is set to [XAVC S 4K], and [S&Q Rec Frame Rate] is set to [59.94p]/[50p])	150M 4:2:0 8bit	✓
S&Q S&Q Settings (S&Q Record Setting) (when [File Format] is set to [XAVC S 4K], and [S&Q Rec Frame Rate] is set to [29.97p]/[25p])	60M 4:2:0 8bit	✓
S&Q S&Q Settings (S&Q Record Setting) (when [File Format] is set to [XAVC S 4K], and [S&Q Rec Frame Rate] is set to [23.98p])	60M 4:2:0 8bit	✓
S&Q S&Q Settings (S&Q Record Setting) (when [File Format] is set to [XAVC S 4K], and [S&Q Rec Frame Rate] is set to [119.88p]/[100p])	200M 4:2:0 8bit	✓
S&Q S&Q Settings (S&Q Record Setting) (when [File Format] is set to [XAVC S HD], and [S&Q Rec Frame Rate] is set to [59.94p]/[50p])	50M 4:2:0 8bit	✓
S&Q S&Q Settings (S&Q Record Setting) (when [File Format] is set to [XAVC S HD], and [S&Q Rec Frame Rate] is set to [29.97p]/[25p])	50M 4:2:0 8bit	✓
S&Q S&Q Settings (S&Q Record Setting) (when [File Format] is set to [XAVC S HD], and [S&Q Rec Frame Rate] is set to [23.98p])	50M 4:2:0 8bit	✓
S&Q S&Q Settings (S&Q Record Setting) (when [File Format] is set to [XAVC S HD], and [S&Q Rec Frame Rate] is set to [119.88p]/[100p])	60M 4:2:0 8bit	✓
S&Q S&Q Settings (S&Q Record Setting) (when [File Format] is set to [XAVC S-I 4K], and [S&Q Rec Frame Rate] is set to [59.94p]/[50p])	600M 4:2:2 10bit/500M 4:2:2 10bit	✓
S&Q S&Q Settings (S&Q Record Setting) (when [File Format] is set to [XAVC S-I 4K], and [S&Q Rec Frame Rate] is set to [29.97p]/[25p])	300M 4:2:2 10bit/250M 4:2:2 10bit	✓
S&Q S&Q Settings (S&Q Record Setting) (when [File Format] is set to [XAVC S-I 4K], and [S&Q Rec Frame Rate] is set to [23.98p])	240M 4:2:2 10bit	✓
S&Q S&Q Settings (S&Q Record Setting) (when [File Format] is set to [XAVC S-I HD], and [S&Q Rec Frame Rate] is set to [59.94p]/[50p])	222M 4:2:2 10bit/185M 4:2:2 10bit	✓

MENU items	Default setting value	Resettable using [Camera Settings Reset]
S&Q S&Q Settings (S&Q Record Setting) (when [File Format] is set to [XAVC S-I HD], and [S&Q Rec Frame Rate] is set to [29.97p]/[25p])	111M 4:2:2 10bit/93M 4:2:2 10bit	✓
S&Q S&Q Settings (S&Q Record Setting) (when [File Format] is set to [XAVC S-I HD], and [S&Q Rec Frame Rate] is set to [23.98p])	89M 4:2:2 10bit	✓
S&Q S&Q Settings (S&Q Record Setting) (when [File Format] is set to [XAVC S-I DCI 4K], and [S&Q Rec Frame Rate] is set to [59.94p]/[50p])	600M 4:2:2 10bit/500M 4:2:2 10bit	✓
S&Q S&Q Settings (S&Q Record Setting) (when [File Format] is set to [XAVC S-I DCI 4K], and [S&Q Rec Frame Rate] is set to [29.97p]/[25p])	300M 4:2:2 10bit/250M 4:2:2 10bit	✓
S&Q S&Q Settings (S&Q Record Setting) (when [File Format] is set to [XAVC S-I DCI 4K], and [S&Q Rec Frame Rate] is set to [23.98p])	240M 4:2:2 10bit	✓
S&Q S&Q Settings (S&Q Record Setting) (when [File Format] is set to [XAVC S-I DCI 4K], and [S&Q Rec Frame Rate] is set to [24.00p])	240M 4:2:2 10bit	✓
FPS (Fixed/Variable Select)	Fixed	✓
FPS (FPS Select) (When [File Format] is set to [XAVC HS 4K])	120fps	✓
FPS (FPS Select) (When [File Format] is set to [XAVC S 4K])	120fps	✓
FPS (FPS Select) (When [File Format] is set to [XAVC S HD])	240fps	✓
FPS (FPS Select) (When [File Format] is set to [XAVC S-I 4K])	120fps	✓
FPS (FPS Select) (When [File Format] is set to [XAVC S-I HD])	240fps	✓
FPS (FPS Select) (When [File Format] is set to [XAVC S-I DCI 4K] and [Rec Frame Rate] is set to [24.00p])	24fps	✓
S&Q Mode Settings	S&Q Mode	✓
Log Shooting Setting (Log Shooting)	Off	✓
Log Shooting Setting (Color Gamut)	S-Gamut3.Cine/S-Log3	✓
Log Shooting Setting (Embed LUT File)	On	✓
Px Proxy Settings (Px Proxy Recording)	Off	✓
Px Proxy Settings (Px Proxy File Format)	XAVC S HD	✓
Px Proxy Settings (Px Proxy Rec. Settings) (when [Px Proxy File Format] is set to [XAVC HS HD])	9M 4:2:0 10bit	✓

MENU items	Default setting value	Resettable using [Camera Settings Reset]
Px Proxy Settings (Px Proxy Rec. Settings) (when [Px Proxy File Format] is set to [XAVC S HD])	6M 4:2:0 8bit	✓
High ISO NR	Normal	✓
HLG Still Image	Off	✓
Color Space	sRGB	✓
Lens Compensation (Shading Comp.)	Auto	—
Lens Compensation (Chromatic Aberration Comp.)	Auto	—
Lens Compensation (Distortion Comp.)	Off	—
Lens Compensation (Breathing Comp.)	Off	✓
Format	—	—
Rec. Media Settings (Recording Media)	Slot 1	—
Rec. Media Settings (Recording Media)	Slot 1	—
Rec. Media Settings (Auto Switch Media)	Off	—
Recover Image DB* * This item is not reset even if you select [Camera Settings Reset] or [Initialize].	—	—
Display Media Info.	—	—
File/Folder Settings (File Number)	Series	—
File/Folder Settings (Set File Name)	DSC	—
File/Folder Settings (Folder Name)	Standard Form	—
Select REC Folder	—	—
Create New Folder	—	—
IPTC Information (Write IPTC Info)	Off	—
IPTC Information (Register IPTC Info)	—	—
Copyright Info (Write Copyright Info)	Off	—
Copyright Info (Set Photographer)	—	—
Copyright Info (Set Copyright)	—	—
Copyright Info (Disp. Copyright Info)	—	—
Write Serial Number	Off	—
File Settings (File Number)	Series	—
File Settings (Series Counter Reset)	—	—

MENU items	Default setting value	Resettable using [Camera Settings Reset]
File Settings (File Name Format)	Standard	—
File Settings (Cam ID + Reel# Settings)	—	—
File Settings (Title Name Settings)	C	—
Exposure Mode	Manual Exposure	✓
S&Q Exposure Mode	Manual Exposure	✓
Exposure Ctrl Type	Flexible Exp. Mode	—
MR Recall Camera Setting	—	—
MR Camera Set. Memory	—	—
MR Memory/Recall Media	Slot 1	✓
Reg. Custom Shoot Set	—	—
Drive Mode	Single Shooting	✓
Bracket Settings (Selftimer during Bracket)	Off	✓
Bracket Settings (Bracket order)	0→-→+	✓
Interval Shoot Func. (Interval Shooting)	Off	✓
Interval Shoot Func. (Shooting Start Time)	1 Sec	✓
Interval Shoot Func. (Shooting Interval)	3 Sec	✓
Interval Shoot Func. (Number of Shots)	30	✓
Interval Shoot Func. (AE Tracking Sensitivity)	Mid	✓
Interval Shoot Func. (Shoot Interval Priority)	Off	✓
Silent Mode	Off	✓
Release w/o Lens	Enable	—
Release w/o Card	Enable	—
Anti-flicker Set. (Var. Shutter)	Off	✓
Anti-flicker Set. (Var. Shutter Set.)	—	—
Audio Recording	On	✓
Audio Rec Level	26	✓
Audio Out Timing	Live	✓
Wind Noise Reduct.	Auto	✓
ni Shoe Audio Set.	48khz/16bit 2ch	✓
Time Code Preset	00:00:00.00	—

MENU items	Default setting value	Resettable using [Camera Settings Reset]
User Bit Preset	00 00 00 00	—
Time Code Format	DF	—
Time Code Run	Rec Run	—
Time Code Make	Preset	—
User Bit Time Rec	Off	—
SteadyShot	On	✓
SteadyShot	Standard	✓
SteadyShot Adjust.	Auto	✓
Focal Length (when [SteadyShot Adjust.] is set to [Manual])	8mm	✓
Zoom Range	Optical zoom only	—
[Zoom Lever Speed] (1st Zoom Spd. STBY)	3	✓
[Zoom Lever Speed] (2nd Zoom Spd. STBY)	8 (Fast)	✓
[Zoom Lever Speed] (1st Zoom Spd. REC)	3	✓
[Zoom Lever Speed] (2nd Zoom Spd. REC)	8 (Fast)	✓
Custom Key Z. Speed (Fixed Speed STBY)	3	✓
Custom Key Z. Speed (Fixed Speed REC)	3	✓
Remote Zoom Speed (Speed Type)	Variable	✓
Remote Zoom Speed (Fixed Speed STBY)	3	✓
Remote Zoom Speed (Fixed Speed REC)	3	✓
Grid Line Display	Off	—
Grid Line Type	Rule of 3rds Grid	—
Live View Display Set. (Live View Display)	Setting Effect ON	—
Live View Display Set. (Frame Rate Low Limit)	Off	✓
Emphasized REC Display	On	✓
Marker Display	Off	—
Center Marker	Off	—
Aspect Marker	Off	—
Safety Zone	Off	—
Guideframe	Off	—
Framing Settings (Framing)	Off	✓

MENU items	Default setting value	Resettable using [Camera Settings Reset]
Framing Settings (Recording/Streaming)	Full	✓
Framing Settings (HDMI)	Crop	✓

(Exposure/Color)

MENU items	Default setting value	Resettable using [Camera Settings Reset]
Shutter Mode	Speed	✓
Auto Slow Shutter	On	✓
ISO	ISO 125	✓
ISO Range Limit	—	—
ISO AUTO Min. SS	Standard	✓
Base ISO	ISO 800	✓
Base ISO Switch EI	1600EI	✓
Exposure Index (When [Base ISO] is set to [ISO 800])	800EI / 6.0E	✓
Exposure Index (When [Base ISO] is set to [ISO 2500])	2500EI / 6.0E	✓
Auto/Manual Swt. Set. (Av Auto/Manual Switch)	Manual	✓
Auto/Manual Swt. Set. (Tv Auto/Manual Switch)	Manual	✓
Auto/Manual Swt. Set. (ISO Auto/Manual Set)	Manual	✓
ND Filter	—	✓
Exposure Comp.	±0.0	✓
Exposure step	0.3EV	—
Exposure Std. Adjust (Multi)	±0	—
Exposure Std. Adjust (Center)	±0	—
Exposure Std. Adjust (Spot)	±0	—
Exposure Std. Adjust (Entire Screen Average)	±0	—
Exposure Std. Adjust (Highlight)	±0	—
Metering Mode	Multi	✓
Face Priority in Multi Metering	On	✓
Spot Metering Point	Center	✓

MENU items	Default setting value	Resettable using [Camera Settings Reset]
AEL w/ Shutter	Auto	—
White Balance	Auto	✓
Priority Set in AWB	Standard	✓
Shutter AWB Lock	Off	—
Shockless WB	1 (Fast)	✓
D-Range Optimizer	D-Range Optimizer: Auto	✓
Creative Look	ST	✓
Picture Profile	PP11	✓
Select LUT	s709	✓
Manage User LUTs	—	—
Zebra Display	Off	—
Zebra Level	70	—

AF/MF (Focus)

MENU items	Default setting value	Resettable using [Camera Settings Reset]
Focus Mode	Automatic AF	✓
Priority Set in AF-S	Balanced Emphasis	—
Priority Set in AF-C	Balanced Emphasis	—
AF Tracking Sensitivity	3(Standard)	✓
AF w/ Shutter	On	—
Pre-AF	Off	—
AF Transition Speed	5	✓
AF Subj. Shift Sensitivity	5(Responsive)	✓
AF Assist	Off	✓
Focus Area	Wide	✓
Focus Area Limit	—	✓
Switch V/H AF Area	Off	✓
Focus Area Color	White	—
AF Area Registration	Off	—
Del. Regist. AF Area	—	—
AF Area Auto Clear	Off	—

MENU items	Default setting value	Resettable using [Camera Settings Reset]
Area Disp. dur Tracking	Off	—
AF-C Area Display	On	—
Phase Detect. Area	Off	—
Circ. of Focus Point	Does Not Circulate	—
AF Frame Move Amt	Standard	✓
Face/Eye Prior. in AF	On	✓
Face/Eye Subject	Human	✓
Subject Sel. Setting	—	✓
Right/Left Eye Select	Auto	✓
Face/Eye Frame Disp.	Off	✓
Face Memory	—	—
Regist. Faces Priority	On	✓
Focus Map	Off	✓
Auto Magnifier in MF	On	—
Focus Magnifier	—	—
Focus Magnif. Time	No Limit	—
Initial Focus Mag.	x1.0	—
AF in Focus Mag.	On	—
Initial Focus Mag.	x1.0	—
Peaking Display	Off	—
Peaking Level	Mid	—
Peaking Color	White	—

(Playback)

To reset the items for [Playback] to the default values, select [Initialize]. These items are not reset to the default values even if you select [Camera Settings Reset].

MENU items	Default setting value
Select Playback Media	Slot 1
View Mode	Date View
Enlarge Image	—
Enlarge Initial Mag.	Standard. Mag.
Enlarge Initial Position	Focused Position

MENU items	Default setting value
Protect	—
Rating	—
Rating Set(Custom Key)	—
Clip Flag	—
Delete	—
Delete pressing twice	Off
Delete confirm.	"Cancel" first
Rotate	—
Copy	—
Photo Capture	—
JPEG/HEIF Switch	JPEG
Cont. Play for Interval	—
Play Speed for Interval	5
Slide Show (Repeat)	Off
Slide Show (Interval)	3 Sec
Image Index	9 Images
Display as Group	Off
Display Rotation	Auto
Focus Frame Display	Off
Disp Specified Time Img.	—
Image Jump Setting (Front dial)	One by one
Image Jump Setting (Rear dial)	One by one

(Network)

To reset the items for [Network] to the default values, select [Initialize] or [Reset Network Set.]. These items are not reset to the default values even if you select [Camera Settings Reset].

MENU items	Default setting value
Smartphone Connection	—
Remote Shoot Function (Remote Shooting)	Off
Remote Shoot Function (Pairing)	—
Remote Shoot Function (Wi-Fi Direct Info.)	—
Select on Cam & Send (Send)	—

MENU items	Default setting value
Select on Cam & Send (Size of Sending Image)	2M
Select on Cam & Send (RAW+J/H Send Target)	JPEG & HEIF
Select on Cam & Send (Px Sending Target)	Proxy Only
Reset Transfer Status	—
Cnct. while Power OFF	Off
Remote Shoot Setting (Still Img. Save Dest.)	Dest.+Camera
Remote Shoot Setting (Save Image Size)	2M
Remote Shoot Setting (RAW+J Save Image)	JPEG Only
Remote Shoot Setting (RAW+H Save Image)	HEIF Only
Remote Shoot Setting (Save JPEG Size)	Large Size
Remote Shoot Setting (Save HEIF Size)	Large Size
FTP Transfer Func. (FTP Function)	Off
FTP Transfer Func. (Server Setting)	Server 1
FTP Transfer Func. (Save/Load FTP Settings)	—
FTP Transfer Func. ([Target Group] under [FTP Transfer])	This Date
FTP Transfer Func. ([Still Images/Movies] under [FTP Transfer])	All
FTP Transfer Func. ([Target Img (Rating)] under [FTP Transfer])	All
FTP Transfer Func. ([Target Movie (S)] under [FTP Transfer])	All
FTP Transfer Func. ([Target Img (Protect)] under [FTP Transfer])	All
FTP Transfer Func. ([Trgt. Img (Clip Flag)] under [FTP Transfer])	All
FTP Transfer Func. ([Transfer Status] under [FTP Transfer])	All
FTP Transfer Func. (Display FTP Error Info.)	—
FTP Transfer Func. (Display FTP Result)	—
FTP Transfer Func. (Auto FTP Transfer)	Off
FTP Transfer Func. (Auto FTP Target)	Still Image
FTP Transfer Func. (RAW+J/H Transfer Target)	JPEG & HEIF
FTP Transfer Func. (Transfer JPEG Size)	Large Size
FTP Transfer Func. (Transfer HEIF Size)	Large Size
FTP Transfer Func. (Px Transfer Target)	Proxy Only
FTP Transfer Func. (FTP Power Save)	Off
Network Streaming (Streaming)	Off

MENU items	Default setting value
▶■ Network Streaming (Stream Connect Error Display)	—
▶■ Network Streaming (Output Img. Quality Set)	Standard/HD (1080p)/59.94p/50p / —
▶■ Network Streaming (Output Information Display)	—
▶■ Network Streaming (Movie Rec During Streaming)	Disable
▶■ Network Streaming (Emphasized Output Display)	On
▶■ Network Streaming (Root Certificate Error)	Does Not Connect
▶■ USB Streaming (Output Res/Frame Rate)	HD(1080p)29.97p/HD(1080p) 25p
▶■ USB Streaming (Movie Rec During Streaming)	Disable
Cloud Connection *	Off
Cloud Information *	—
Wi-Fi Connect	Off
WPS Push	—
Access Point Set.	—
Wi-Fi Frequency Band	2.4GHz
Display Wi-Fi Info.	—
SSID/PW Reset	—
Bluetooth Function	Off
Pairing	—
Manage Paired Device	—
Bluetooth Rmt Ctrl	Off
Disp Device Address	—
LAN IP Address Setting	Auto
Display Wired LAN Info.	—
USB-LAN Connection	—
USB-LAN Disconnection	—
Tethering Connection	—
Tethering Disconnection	—
USB-LAN Cnct. Launch	Off
Airplane Mode	Off
Edit Device Name	—
Import Root Certificate	—

MENU items	Default setting value
Access Authen. Settings (Access Authen.)	On
Access Authen. Settings (User)	—
Access Authen. Settings (Password)	—
Access Authen. Settings (Generate Password)	—
Access Authen. Info	—
Security(IPsec) (IPsec)	Off
Security(IPsec) (Dest. IP Address)	—
Security(IPsec) (Shared Key)	—
Wi-Fi Direct Settings	Type1 (Standard)
Reset Network Set.	—

* Only available in certain countries and regions

(Setup)

To reset the items for [Setup] to the default values, select [Initialize]. These items are not reset to the default values even if you select [Camera Settings Reset].

MENU items	Default setting value
Language	—
Area/Date/Time Setting (Area Setting)	—
Area/Date/Time Setting (Daylight Savings)	Off
Area/Date/Time Setting (Date/Time)	—
Area/Date/Time Setting (Date Format)	—
NTSC/PAL Selector	—
Setting Reset	—
Save/Load Settings	—
Custom Key/Dial Set. (Front dial)	Follow Custom ( )
Custom Key/Dial Set. (Rear dial)	Follow Custom ( )
Custom Key/Dial Set. (Control Wheel)	Follow Custom ( )
Custom Key/Dial Set. (Custom Button 1)	Follow Custom ( )
Custom Key/Dial Set. (Custom Button 2)	Follow Custom ( )
Custom Key/Dial Set. (Custom Button 3)	Follow Custom ( )
Custom Key/Dial Set. (Custom Button 4)	Follow Custom ( )
Custom Key/Dial Set. (Custom Button 5)	Follow Custom ( )

MENU items	Default setting value
Custom Key/Dial Set. (Custom Button 6)	Follow Custom ( )
Custom Key/Dial Set. (Multi-Slc Center Btn)	Follow Custom ( )
Custom Key/Dial Set. (Center Button)	Follow Custom ( )
Custom Key/Dial Set. (Left Button)	Follow Custom ( )
Custom Key/Dial Set. (Right Button)	Follow Custom ( )
Custom Key/Dial Set. (Down Button)	Follow Custom ( )
Custom Key/Dial Set. (MOVIE Button)	Movie Shooting
Custom Key/Dial Set. (Focus Hold Button)	Follow Custom ( )
Custom Key/Dial Set. (Front dial)	Aperture
Custom Key/Dial Set. (Rear dial)	ISO/EI
Custom Key/Dial Set. (Control Wheel)	Shutter Speed
Custom Key/Dial Set. (Custom Button 1)	L.PressAv Auto/Manual
Custom Key/Dial Set. (Custom Button 2)	White Balance
Custom Key/Dial Set. (Custom Button 3)	L.PressISO Auto/Manual
Custom Key/Dial Set. (Custom Button 4)	Not set
Custom Key/Dial Set. (Custom Button 5)	Focus Magnifier
Custom Key/Dial Set. (Custom Button 6)	Movie Shooting
Custom Key/Dial Set. (Multi-Slc Center Btn)	Focus Standard
Custom Key/Dial Set. (Center Button)	Not set
Custom Key/Dial Set. (Left Button)	Zebra Display Select
Custom Key/Dial Set. (Right Button)	Peaking Display Select
Custom Key/Dial Set. (Down Button)	L.PressTv Auto/Manual
Custom Key/Dial Set. (MOVIE Button)	Movie Shooting
Custom Key/Dial Set. (Focus Hold Button)	Focus Hold
Custom Key Setting (Custom Button 1)	Follow Custom (/)
Custom Key Setting (Custom Button 2)	Follow Custom (/)
Custom Key Setting (Custom Button 3)	Follow Custom (/)
Custom Key Setting (Custom Button 5)	Follow Custom (/)
Custom Key Setting (Custom Button 6)	Follow Custom (/)
Custom Key Setting (MOVIE Button)	Follow Custom (/)
Custom Key Setting (Fn Button)	Not set

MENU items	Default setting value
Fn Menu Settings	—
Different Set for Still/Mv	—
Home (Lower Left)	Aperture
DISP (Screen Disp) Set	—
REC w/ Shutter	Off
Zoom Ring Rotate	Left(W)/Right(T)
Custom Key/Dial Set.	—
Custom Key/Dial Set.	—
My Dial Settings	—
Av/Tv Rotate	Normal
Lock Operation Parts	Off
Touch Operation	On
Swipe Up	Open the Fn Menu
Touch Func. in Shooting	Touch Tracking
Screen Reader (Screen Reader)	Off
Screen Reader (Speed)	Standard
Screen Reader (Volume)	7
Monitor Brightness	Manual
Display Quality	Standard
Monitor Flip Direction	Auto
TC/UB Disp. Setting	TC
Gamma Display Assist	Off
Gamma Disp. Assist Typ.	Auto
Display LUT	On
De-Squeeze Display	Off
Remain Shoot Display	Not Displayed
Auto Review	Off
Display File Name	On
Power Save Start Time	5 Min
Auto Power OFF Temp.	Standard
Volume Settings	7

MENU items	Default setting value
4ch Audio Monitoring	CH1/CH2
Audio signals	On
USB Connection Mode	Sel. When Connect
USB LUN Setting	Multi
USB Power Supply	On
HDMI Resolution	Auto
HDMI Output Settings (Rec. Media dur HDMI Output)	On
HDMI Output Settings (Output Resolution)	Auto
HDMI Output Settings (4K Output Set.(HDMI Only))	59.94p 10bit/50p 10bit
HDMI Output Settings (RAW Output)	Off
HDMI Output Settings (RAW Output Setting)	59.94p/50p
HDMI Output Settings (Time Code Output)	Off
HDMI Output Settings (REC Control)	Off
HDMI Output Settings (4ch Audio Output)	CH1/CH2
HDMI Info. Display	On
CTRL FOR HDMI	On
Video Light Mode	Power Link
REC Lamp	All On
Fan Control	Auto
Sensor Cleaning	—
Pixel Mapping	—
Version	—
Display Serial Number	—
Privacy Notice	—

☆ (My Menu)

To reset the items for [My Menu] to the default values, select [Initialize] or [Delete All]. These items are not reset to the default values even if you select [Camera Settings Reset].

MENU items	Default setting value
Add Item	—
Sort Item	—
Delete Item	—

MENU items	Default setting value
Delete Page	—
Delete All	—
Display From My Menu	Off

5-043-036-16(1) Copyright 2022 Sony Corporation

Interchangeable Lens Digital Camera
ILME-FX30

Specifications

Camera

[System]

Camera Type
Interchangeable Lens Digital Camera

Lens
Sony E-mount lens

[Image sensor]

Image format
APS-C size (23.3 mm × 15.5 mm), CMOS image sensor

Effective pixel number of camera
Still image: Approx. 26 000 000 pixels
Movie: Approx. 20 100 000 pixels

Total pixel number of camera
Approx. 27 000 000 pixels

[SteadyShot]

System
In-camera sensor shift image stabilization system

[Anti-Dust]

System
Charge protection coating on optical filter and image sensor shift mechanism

[Auto focus system]

Detection system
Phase-detection system/Contrast detection system

Sensitivity Range
–3 EV to +20 EV (at ISO 100 equivalent, F2.0)

[Monitor]

LCD monitor
7.5 cm (3.0 type) TFT drive, touch panel

Total number of dots
2 359 296 dots

[Exposure control]

Metering method
1 200-zone evaluative metering

Metering Range

–3 EV to +20 EV (at ISO 100 equivalent with F2.0 lens)

ISO sensitivity (Recommended exposure index)

Still images: ISO 100 to ISO 32 000 (Extended ISO: Minimum ISO 50, maximum ISO 102 400), [ISO AUTO] (ISO 100 to ISO 6 400, Maximum/Minimum can be set.)*

Movies: ISO 100 to ISO 32 000 equivalent, [ISO AUTO] (ISO 100 to ISO 6 400 equivalent, Maximum/Minimum can be set.)*

* When [Picture Profile] is set to [Off]

Exposure compensation

±5.0 EV (switchable between 1/3 EV and 1/2 EV steps)

[Shutter]

Type

Electronic shutter

Speed range

Still images: 1/8 000 second to 30 seconds

Movies: 1/8 000 second to 1/4 second (1/3 EV step)

- In AUTO mode
  60p-compatible devices: up to 1/60 second (up to 1/30 second in Auto slow shutter mode)
  50p-compatible devices: up to 1/50 second (up to 1/25 second in Auto slow shutter mode)
- When [Shutter Mode] is set to [Angle]
  5.6° to 64F (5.6° to 360° when [Rec Frame Rate] is set to [119.88p]/[100p] or when shooting slow-motion/quick-motion movies)

[Recording format]

File format

JPEG (compliant with DCF Ver. 2.0, Exif Ver. 2.32, and MPF Baseline), HEIF (MPEG-A MIAF compliant), RAW (Sony ARW 5.0 format compliant)

Movie (XAVC HS format)

XAVC Ver2.1: MP4 format compliant

Video: MPEG-H HEVC/H.265

Audio: LPCM 2ch (48 kHz 16 bit), LPCM 4ch (48 kHz 24 bit)*1, LPCM 2ch (48 kHz 24 bit)*1, MPEG-4 AAC-LC 2ch*2

Movie (XAVC S format)

XAVC Ver2.1: MP4 format compliant

Video: MPEG-4 AVC/H.264

Audio: LPCM 2ch (48 kHz 16 bit), LPCM 4ch (48 kHz 24 bit)*1, LPCM 2ch (48 kHz 24 bit)*1, MPEG-4 AAC-LC 2ch*2

*1 When using the XLR handle unit (supplied only with the ILME-FX30) or when using accessories that can support 4-channel output and 24 bits with the multi-interface shoe

*2 Proxy movies

[Recording media]

CFexpress Type A memory cards, SD cards

[Slot]

SLOT 1/SLOT 2

Slot for CFexpress Type A memory cards, SD cards (UHS-I and UHS-II compatible)

Supports operations between two memory cards.

[Input/output terminals]

USB Type-C terminal

SuperSpeed USB 10 Gbps (USB 3.2)

Compatible with USB Power Delivery

Multi/Micro USB Terminal*

Hi-Speed USB (USB 2.0)

* Supports Micro USB compatible devices.

HDMI

HDMI type A jack

(Microphone) terminal

Ø 3.5 mm Stereo mini jack

(Headphones) terminal

Ø 3.5 mm Stereo mini jack

[Power, general]

Rated input

7.2 V ⎓

Power consumption

Using an E PZ 18-105mm F4 G OSS

Approx. 3.5 W (while shooting still images)/approx. 5.6 W (while shooting movies)

Operating temperature

0 °C to 40 °C (32 °F to 104 °F)

Storage temperature

–20 °C to 55 °C (–4 °F to 131 °F)

Dimensions (W/H/D) (Approx.)

129.7 × 77.8 × 84.5 mm

5 1/8 × 3 1/8 × 3 3/8 in.

Mass (Approx.)

646 g (1 lb 6.8 oz) (including battery pack, SD card)

Microphone

Stereo

Speaker

Monaural

Exif Print

Compatible

PRINT Image Matching III

Compatible

[Eco and energy saving]

Power consumption (Off mode)

Not available

Power consumption (Standby mode/Low power mode)

0.5 W

Power consumption (Networked standby mode)

2.0 W (Bluetooth) / 2.0 W (all terminals and networks connected)

Low power mode activated

Within 20 minutes (default)

Networked standby mode activated

Within 20 minutes (default)

[Wireless LAN]

WW878474 (see name plate on the bottom of camera)

Supported format
IEEE 802.11 a/b/g/n/ac

Frequency band
2.4 GHz / 5 GHz

Security
WEP*/WPA-PSK*/WPA2-PSK/WPA3-SAE

* If the camera's system software (firmware) is Ver.6.00 or later, wireless connections using WEP or WPA are not supported.

Connection method
Wi-Fi Protected Setup™ (WPS)/Manual

Access method
Infrastructure mode

WW679215 (see name plate on the bottom of camera)

Supported format
IEEE 802.11 b/g/n

Frequency band
2.4 GHz

Security
WEP*/WPA-PSK*/WPA2-PSK/WPA3-SAE

* If the camera's system software (firmware) is Ver.6.00 or later, wireless connections using WEP or WPA are not supported.

Connection method
Wi-Fi Protected Setup™ (WPS)/Manual

Access method
Infrastructure mode

[Bluetooth communications]

Bluetooth standard Ver. 5.0

Frequency band
2.4 GHz

XLR handle unit (ILME-FX30 only)

INPUT1/INPUT2 jack
3-pin XLR/TRS, female type

INPUT3 jack
Ø 3.5 mm Stereo mini jack

Mass (Approx.)
305 g (10.8 oz)

AC Adaptor AC-UUD12/AC-UUE12/AC-UUE12 T (supplied in some countries/regions)

Rated input
100 – 240 V ∿ , 50/60 Hz, 0.2 A

Rated output
5 V ⎓ , 1.5 A

Rechargeable battery pack NP-FZ100

Rated voltage
7.2 V ⎓

Recommended USB-PD-compatible AC adaptor

Input

100 – 240 V ∿ , 50/60 Hz

Output

9 V ⎓ / 2 A or more, 15 V ⎓ / 2 A or more

Design and specifications are subject to change without notice.

5-043-036-16(1) Copyright 2022 Sony Corporation

Trademarks

- XAVC S and XAVC S are trademarks of Sony Group Corporation.
- XAVC HS and XAVC HS are trademarks of Sony Group Corporation.
- Mac is a trademark of Apple Inc., registered in the United States and other countries.
- USB Type-C® and USB-C® are registered trademarks of USB Implementers Forum.
- The terms HDMI™, HDMI High-Definition Multimedia Interface, HDMI Trade dress and the HDMI Logos are trademarks or registered trademarks of HDMI Licensing Administrator, Inc.
- Microsoft and Windows are registered trademarks or trademarks of Microsoft Corporation in the United States and/or other countries.
- SDXC logo is a trademark of SD-3C, LLC.
- The CFexpress™ is a trademark licensed by the CompactFlash Association.
- Wi-Fi, the Wi-Fi logo and Wi-Fi Protected Setup are registered trademarks or trademarks of the Wi-Fi Alliance.
- The Bluetooth® word mark and logos are registered trademarks owned by Bluetooth SIG, Inc. and any use of such marks by Sony Group Corporation and its subsidiaries is under license.
- QR Code is a trademark of Denso Wave Inc.
- In addition, system and product names used in this manual are, in general, trademarks or registered trademarks of their respective developers or manufacturers. However, the ™ or ® marks may not be used in all cases in this manual.

5-043-036-16(1) Copyright 2022 Sony Corporation

License

Notes on the License

This product comes with software that are used based on licensing agreements with the owners of that software. Based on requests by the owners of copyright of these software applications, we have an obligation to inform you of the following. Licenses (in English) are recorded in the internal memory of your product. Establish a Mass Storage connection between the product and a computer to read licenses in the “PMHOME” - “LICENSE” folder.

THIS PRODUCT IS LICENSED UNDER THE AVC PATENT PORTFOLIO LICENSE FOR THE PERSONAL USE OF A CONSUMER OR OTHER USES IN WHICH IT DOES NOT RECEIVE REMUNERATION TO
(i) ENCODE VIDEO IN COMPLIANCE WITH THE AVC STANDARD (“AVC VIDEO”)
AND/OR
(ii) DECODE AVC VIDEO THAT WAS ENCODED BY A CONSUMER ENGAGED IN A PERSONAL ACTIVITY AND/OR WAS OBTAINED FROM A VIDEO PROVIDER LICENSED TO PROVIDE AVC VIDEO.
NO LICENSE IS GRANTED OR SHALL BE IMPLIED FOR ANY OTHER USE. ADDITIONAL INFORMATION INCLUDING THAT RELATING TO PROMOTIONAL, INTERNAL AND COMMERCIAL USES AND LICENSING MAY BE OBTAINED FROM MPEG LA, L.L.C.
SEE https://www.via-la.com/

Covered by one or more claims of the HEVC patents listed at patentlist.accessadvance.com.

On GNU GPL/LGPL applied software

The software included in this product contains copyrighted software that is licensed under the GPLv2 and other licenses which may require access to source code. You may find a copy of the relevant source code as required under the GPLv2 (and other licenses) at https://www.sony.net/Products/Linux/.

You may obtain the source code as required by the GPLv2 on a physical medium from us for a period of three years after our last shipment of this product by applying through the form at https://www.sony.net/Products/Linux/.
This offer is valid to anyone in receipt of this information.

5-043-036-16(1) Copyright 2022 Sony Corporation

Troubleshooting

If you experience trouble with the product, try the following solutions.

1. **Remove the battery pack, wait for about one minute, re-insert the battery pack, then turn on the power.**
2. **Initialize the settings.**
3. **Consult your dealer or local authorized service facility. Additional information on this product and answers to frequently asked questions can be found at our Customer Support Website.**
   https://www.sony.net/

Related Topic

- Setting Reset

5-043-036-16(1) Copyright 2022 Sony Corporation

Warning messages

Set Area/Date/Time.

- Set the area, date and time. If you have not used the product for a long time, charge the internal rechargeable backup battery.

Power insufficient.

- The image copying or the image sensor cleaning function will not operate because the remaining battery level is too low. Recharge the battery pack or supply power using an AC Adaptor.

Unable to use memory card. Format?

- The memory card was formatted on a computer and the file format was modified. Select [Enter] and then format the memory card. You can use the memory card again, however, all previous data in the memory card is erased. It may take some time to complete the format. If the message still appears, change the memory card.

Memory Card Error

- An incompatible memory card is inserted.
- Formatting has failed. Format the memory card again.

Unable to read memory card. Reinsert memory card.

- An incompatible memory card is inserted.
- The memory card is damaged.
- The terminal section of the memory card is dirty.

Memory card locked.

- You are using a memory card with a write-protect switch or a delete-protect switch with the switch set to the LOCK position. Set the switch to the record position.

Cannot open the shutter since the memory card is not inserted.

- No memory card has been inserted into the memory card slot selected in [Recording Media] or [Recording Media].
- To release the shutter without inserting a memory card into the camera, set [Release w/o Card] to [Enable]. In this case, images will not be saved.

This memory card may not be capable of recording and playing normally.

- An incompatible memory card is inserted.

Unable to display.

- Images recorded with other products or images modified with a computer may not be displayed.
- Processing on the computer such as deletion of the image files may cause inconsistencies in the image database files. Repair the image database files.

Check that a lens is mounted. For an unsupported lens, set "Release w/o Lens" in the menu to "Enable".

- The lens is not attached properly, or the lens is not attached. If the message appears when a lens is attached, reattach the lens. If the message appears frequently, check whether the contacts of the lens and product are clean or not.
- When attaching the product to an astronomical telescope or similar instrument, or using an unsupported lens, set [Release w/o Lens] to [Enable].

Internal temp. high. Allow it to cool.

- The product has become hot because you have been shooting continuously. Turn the power off and cool the product and wait until the product is ready to shoot again.

(Overheating warning)

- You have been recording images for a long time, the product temperature has risen.

(Database file error)

- The number of images exceeds that for which date management in a database file by the product is possible.

(Database file error)

- Unable to register to the database file. Import all the images to a computer and recover the memory card.

Image DataBase File error

- There is something wrong in the Image Database File. Select MENU → / (Shooting) → [Media] → [Recover Image DB].

System Error
Camera Error. Turn power off then on.

- Remove the battery pack, and then re-insert it. If the message appears frequently, consult local authorized Sony service facility.

Unable to magnify.
Unable to rotate image.

- Images recorded with other products may not be enlarged or rotated.

Cannot create more folders.

- A folder in the memory card has the first three digits “999.” You cannot create any more folders on this camera.

(Cooling fan malfunction warning)
The cooling fan has malfunctioned. Please seek repair service.

- The cooling fan is malfunctioning. Consult a local authorized Sony service facility.

Related Topic

- Notes on memory card
- Performing initial setup for the camera
- Format
- Release w/o Card
- Release w/o Lens (still image/movie)
- Recover Image DB (still image/movie)

5-043-036-16(1) Copyright 2022 Sony Corporation