SOLAR PANEL
SIDE MOUNTING BRACKET

INSTALLATION MANUAL

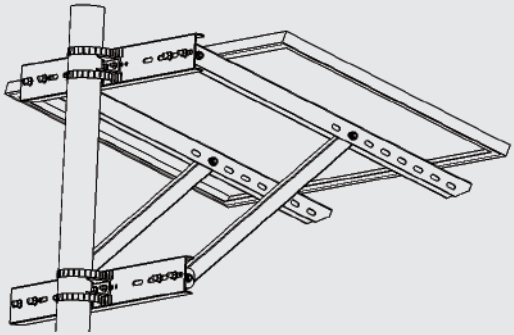

MODEL: RS-SM01S RS-SM01SB RS-SM01D RS-SM01DB

THIS MANUAL CONTAINS IMPORTANT SAFETY AND INSTALLATION INSTRUCTIONS FOR THE SOLAR PANEL SIDE MOUNTING BRACKET. PLEASE READ THIS MANUAL CAREFULLY AND FOLLOW ALL INSTRUCTIONS.

Tools List

Electric hand drill	Spanner	Spirit level	Measuring tape
—	M6 / M8 / M10	—	16.4 ft / 5 m
			

Tightening Torque Table

Bolt Size	Tightening Torque
M6	44–53 lbf·in (5–6 N·m)
M8	88–106 lbf·in (10–12 N·m)
M10	159–177 lbf·in (18–20 N·m)

Components List

RS-SM01S & RS-SM01SB (Single-Panel Side Mount Kit)

No.	Item Name	Sketch	Specs	Material	Length	Qty
1	Stainless Steel Band Clamp		–	304	–	4
2	Clamp Connector		U66×40×4.0	6005-T5	5.28 in (134 mm)	2
3	Inclined Beam Connector		122×61×4.0	6005-T5	1.97 in (50 mm)	2
4	Brace Connector		115×60×3.5	6005-T5	1.97 in (50 mm)	2
5	Cross Beam 1		U90×35×3.2	6005-T5	36.61 in (930 mm)	2
6	Brace 1		40×40×1.8	6005-T5	25.04 in (636 mm)	2
7	Inclined Beam 1		46×50×3.0	6005-T5	33.07 in (840 mm)	2
8	Connector Bolt 1 (Hex Socket + 1 Flat Washer + 1 Flange Nut)	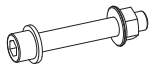	M10×70	304	–	6
9	Connector Bolt 2 (Hex Socket + 1 Flat Washer + 1 Flange Nut)	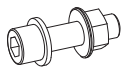	M10×25	304	–	14
10	Module Bolt (Hex Head + 2 Large Flat Washers + 1 Flange Nut)		M6×25	304	–	4

RS-SM01D & RS-SM01DB (Dual-Panel Side Mount Kit)

No.	Item Name	Sketch	Specs	Material	Length	Qty
1	Stainless Steel Band Clamp		–	304	–	4
2	Clamp Connector		U66×40×4.0	6005-T5	5.28 in (134 mm)	2
3	Inclined Beam Connector		122×61×4.0	6005-T5	1.97 in (50 mm)	2
4	Brace Connector		115×60×3.5	6005-T5	1.97 in (50 mm)	2
5	Cross Beam 2		U120×35×3.2	6005-T5	36.61 in (930 mm)	2
6	Brace 2		40×40×1.8	6005-T5	49.61 in (1260 mm)	2
7	Inclined Beam 2	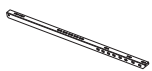	46×50×3.0	6005-T5	64.96 in (1650 mm)	2
8	Connector Bolt 1 (Hex Socket + 1 Flat Washer + 1 Flange Nut)	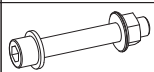	M10×70	304	–	6
9	Connector Bolt 2 (Hex Socket + 1 Flat Washer + 1 Flange Nut)	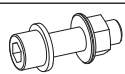	M10×25	304	–	14
10	Module Bolt (Hex Head + 2 Large Flat Washers + 1 Flange Nut)		M6×25	304	–	8

Installation Steps

Step 1: Cross Beam Installation

1. Each system includes two cross beams: an upper cross beam and a lower cross beam. Clear markings are provided on the side of each beam.

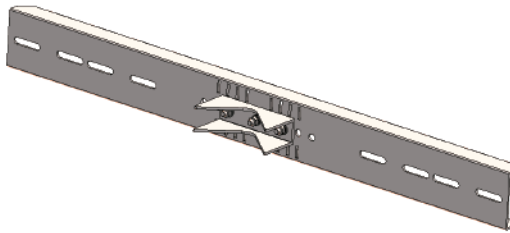

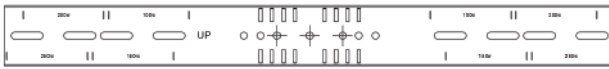

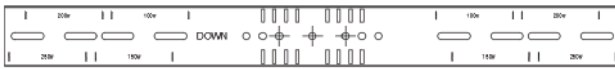

2. Secure the cross beams to the side of the post using stainless steel band clamps. Each cross beam requires two band clamps.

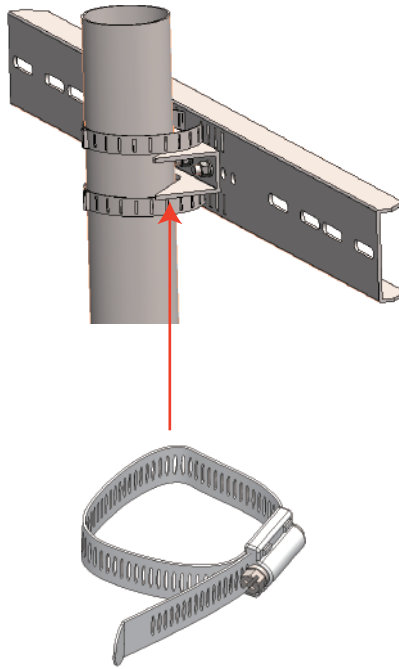

Stainless Steel Band Clamp

Notes: When installing the lower cross beam, pay attention to the vertical distance A between the two cross beams. This distance determines the installation angle α between the PV module and the post.

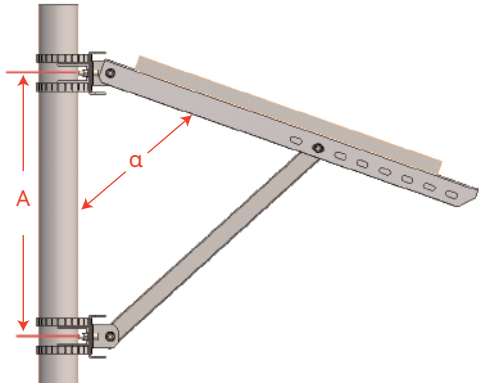

Module-to-Post Angle α	Distance A (Single Panel)	Distance A (Dual Panel)
90°	13.78 in (350 mm)	27.99 in (711 mm)
80°	17.60 in (447 mm)	35.71 in (907 mm)
70°	22.01 in (559 mm)	44.65 in (1134 mm)
60°	26.57 in (675 mm)	54.06 in (1373 mm)
50°	31.10 in (790 mm)	63.23 in (1606 mm)
40°	35.12 in (892 mm)	71.50 in (1816 mm)
30°	38.39 in (975 mm)	78.39 in (1991 mm)
25°	39.76 in (1010 mm)	88.86 in (2257 mm)

Step 2: Inclined Beam and Brace Installation

1. The inclined beams and braces are pre-assembled with connectors at the factory.

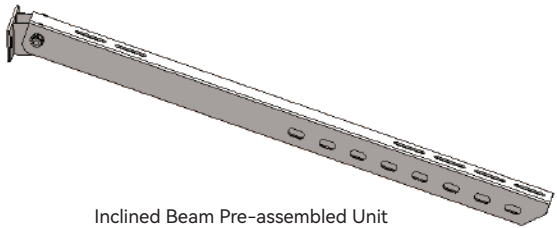

Inclined Beam Pre-assembled Unit

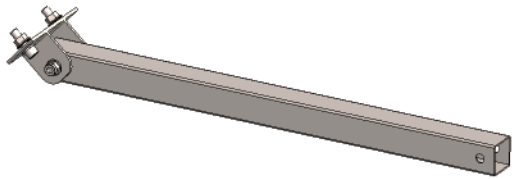

Brace Pre-assembled Unit

2. Attach the inclined beams and braces to the cross beams respectively.

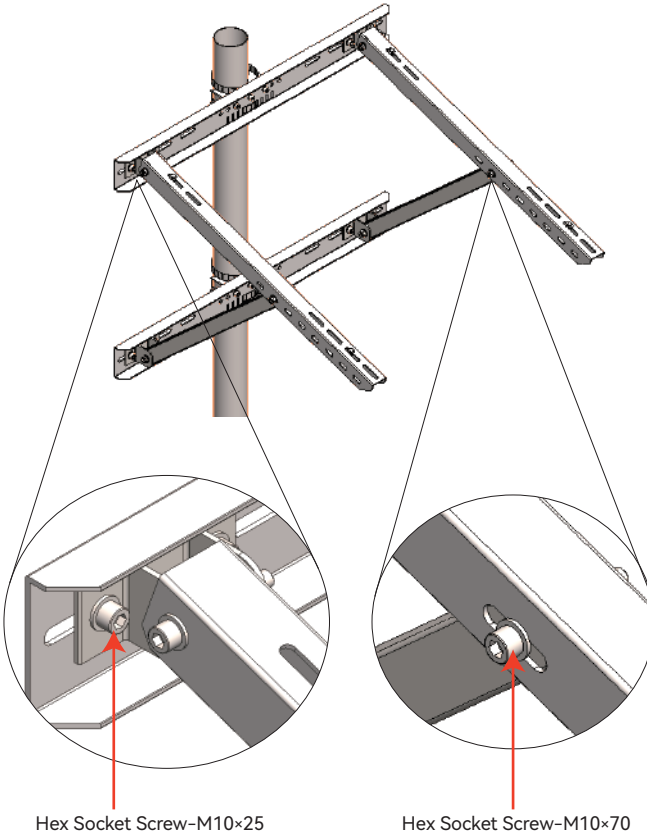

Notes: The distance B between the two cross beams should follow the values in the table below. Different PV module sizes correspond to different installation distances.

Markings indicating module wattage are provided at different mounting holes on the cross beams. Before tightening the bolts, select the mounting holes corresponding to the module wattage.

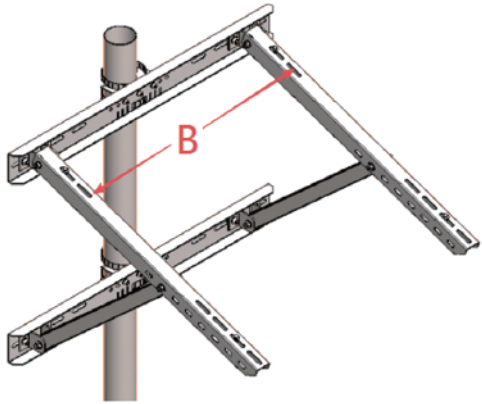

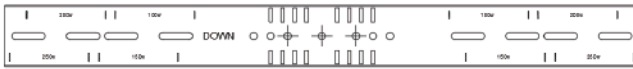

Cross Beam Side Marking Line

Cross Beam Installation Distance Table for Different PV Modules

PV Module Power	Module Size (L×W)	Inclined Beam Distance B
100 W	39.0×21.3 in (990×540 mm)	19.29 in (490 mm)
150 W	44.0×26.4 in (1118×670 mm)	21.18 in (538 mm)
200 W	58.7×26.8 in (1490×680 mm)	29.53 in (750 mm)
250 W	60.6×29.9 in (1540×760 mm)	31.50 in (800 mm)

Step 3: Module Installation

Mount the PV module onto the inclined beams.

Each module requires four M6×25 bolts.

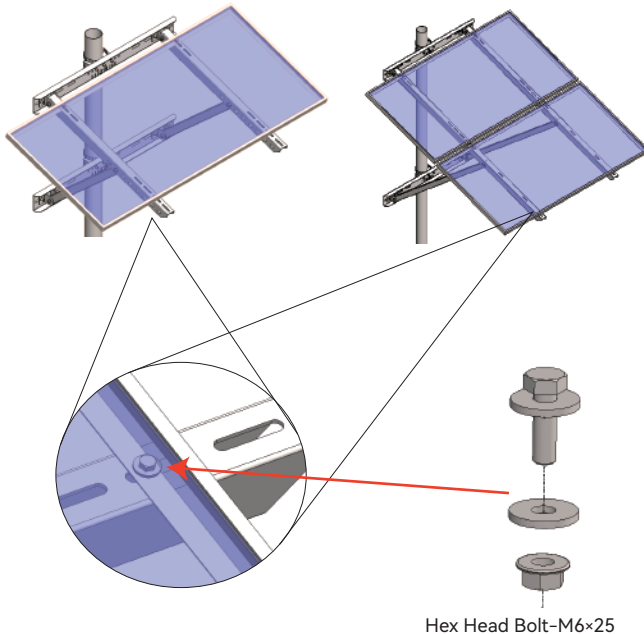

Completion

After installation is complete, check and ensure that all bolts are securely tightened.

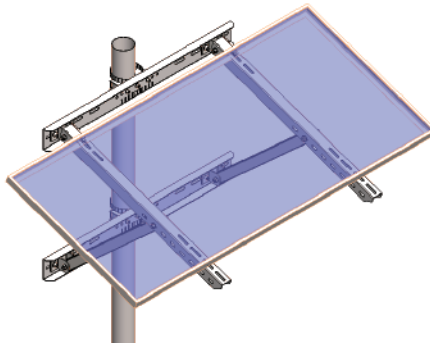

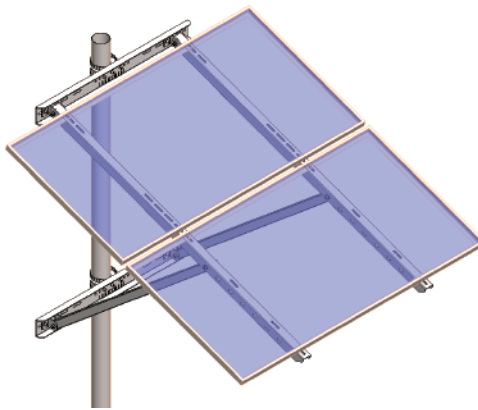

1-800-831-9889
support@richsolar.com
www.richsolar.com
1900 Mountain Ave, Norco, CA 92860

V2.0