(720) 420-1731 **REP** Denver, CO

3-IN-1 WOOD PLYO BOX

WWW.REPFITNESS.COM

PARTS INCLUDED:

6 Wooden Box Side Pieces
3 Wooden Pieces for Internal Support
(No internal support needed for 16x14x12 Plyo Box)

HARDWARE INCLUDED:

Screws
x 37

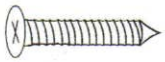

SUGGESTED HARDWARE:

Power Drill

Tip: Do not over-screw/tighten the screws if using a power drill

No internal support needed for 16x14x12 Plyo Box

1. Lay down panel that will mirror logoed panel.

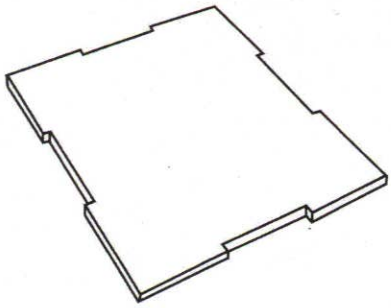

2. Take one of the panels that will serve as the bottom of the box and attach it to the long side of the first panel.

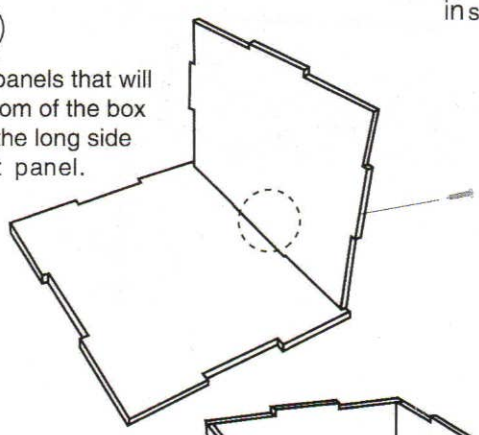

3. Repeat step 2 attaching second panel that will serve as the top of the box, opposite of panel attached in step 2.

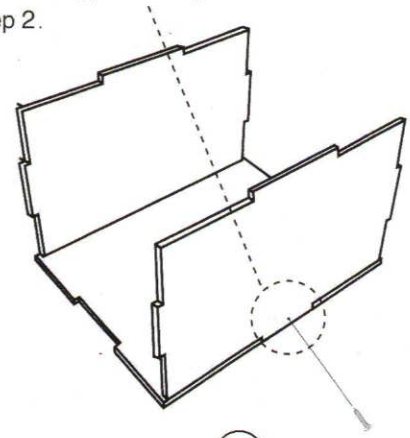

4. Take one of the panels with a handle and attach it to the shorter end, between the two previously added panels.

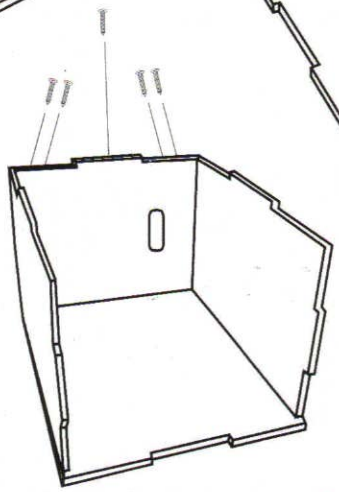

5. Repeat step 4 attaching second panel with a handle, opposite of panel attached in step 4.

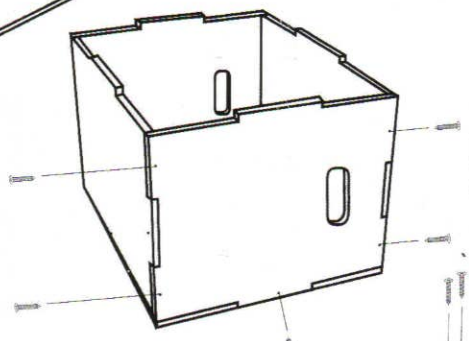

6. Slide the middle support pieces together and screw in place to keep secured.

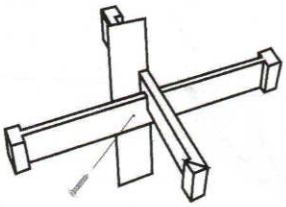

7. Place middle support inside box.

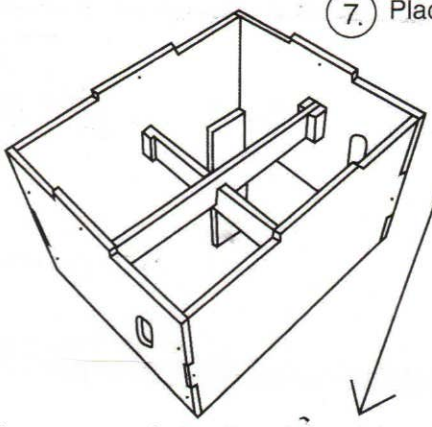

8. Attach final panel with logo on it and finish screwing in all sides.

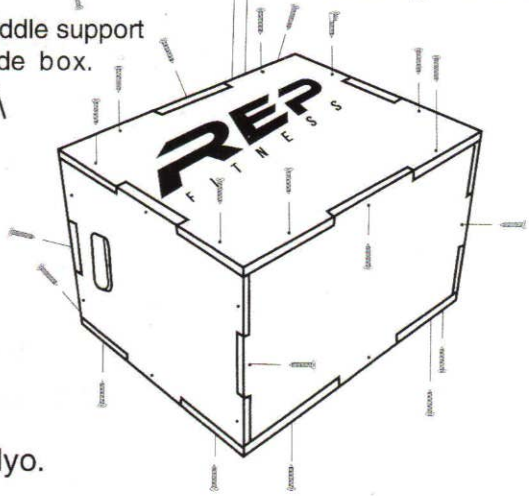

*Middle support not needed (or present) in the 12 x 14 x 16 plyo. It does not need the middle support because of its size.

Any issues? Please contact us directly by phone: 720-420-1731, email: info@repfitness.com or morse code...(.-. . .--. ..-. .. - -.. .. ..). We are always here for our Customers! – Team REP