OUTLAND LIVING™

VERTICAL GARDEN

Owner's Manual

OUTDOOR LIVING PERFECTED™

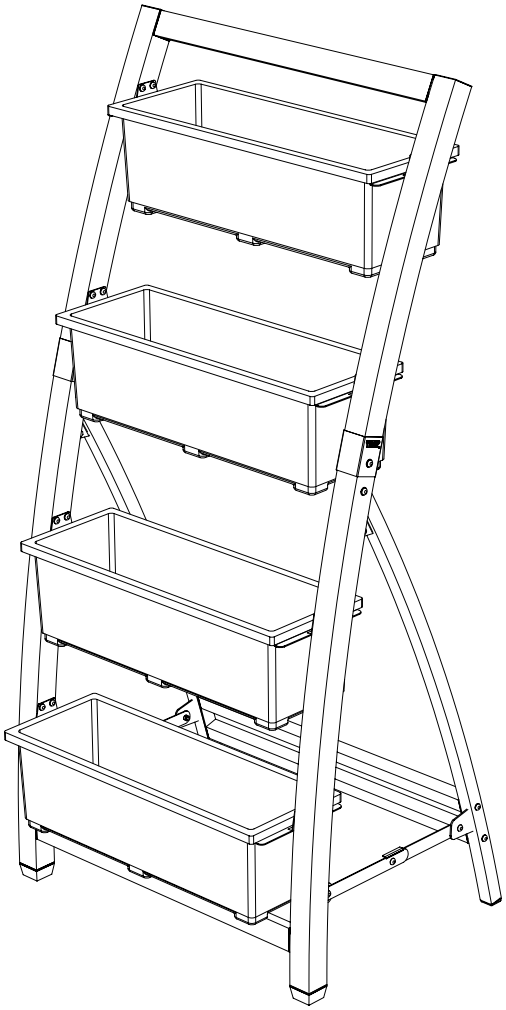

Model number OLVG-4BIN

Series number 301

FMI BRANDS INC.
107 – 19052 26 Avenue | Surrey, B.C. Canada V3Z 3V7 | Toll Free 1-888-514-1663 | Fax 1-888-797-9931

D.OLVG-301.000.V1

OUTLAND LIVING™ VERTICAL GARDEN

Owner & Safety Manual

Model number OLVG-4BIN, Series number 301

⚠ CAUTION:

Watch for sharp edges.
Wear protective gloves if necessary.

⚠ WARNING:

Improper installation, adjustment, alteration, service or maintenance can cause injury or property damage. Read the installation, operating and maintenance instructions thoroughly before installing or servicing this equipment.

NOTE TO INSTALLER:
Leave this guide with the consumer.

NOTE TO CONSUMER:
Please retain this guide for future use.

FMI BRANDS INC.
309-19133 26th Avenue, Surrey, B.C. Canada V3Z 3V7
Toll Free 1-888-514-1663
Fax 1-888-797-9931

SUPPLIED PARTS & HARDWARE LIST:

PART #	DESCRIPTION	PICTURE
1	LEFT UPPER FRAME (x1)	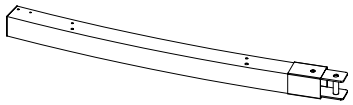
2	LEFT LOWER FRAME (x1)	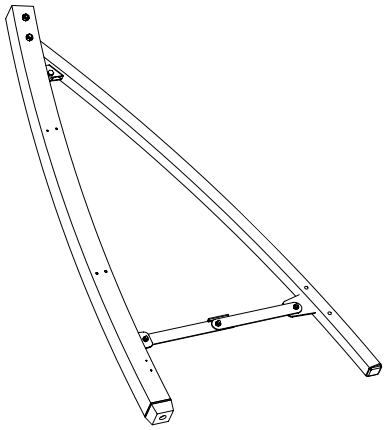
3	RIGHT UPPER FRAME (x1)	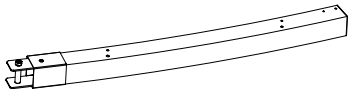
4	RIGHT LOWER FRAME (x1)	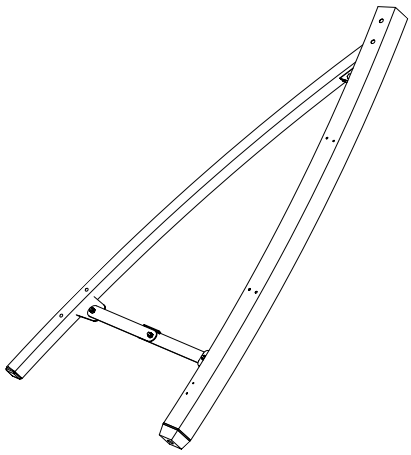

SUPPLIED PARTS & HARDWARE LIST (continued):

PART #	DESCRIPTION	PICTURE
5	FRONT CROSS BAR (x2)	
6	REAR CROSS BAR (x1)	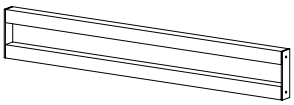
7	BIN HANGER (x8)	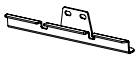
8	M6x16mm SCREW (x24)	
9	M6x40mm SCREW (x4)	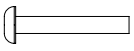
10	M6 PLASTIC WASHER (x28)	

PART #	DESCRIPTION	PICTURE
11	M8x60mm SCREW (x4)	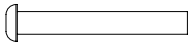
12	M8 PLASTIC WASHER (x4)	
13	M8 NUT (x4)	
14	PLASTIC PLANTER BIN (x4)	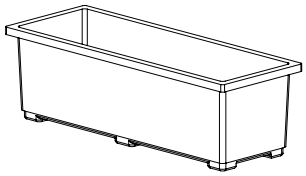
15	DRAIN PLUG (x1)	

SECTION 1: ASSEMBLY

STEP 1

Assemble the Frame-LHS (Left Hand Side) and Frame-RHS (Right Hand Side).

a. Insert Left Upper Frame (part 1) into Left Lower Frame (part 2).

b. Insert Right Upper Frame (part 3) into Right Lower Frame (part 4).

c. Assemble the joint sections of Frame-LHS and Frame-RHS. NOTE DRAWING DETAIL A for the direction to insert the (4x) M8x60 screws (part 11), (4x) M8 plastic washers (Part 12) and (4x) M8 nuts (part 13).

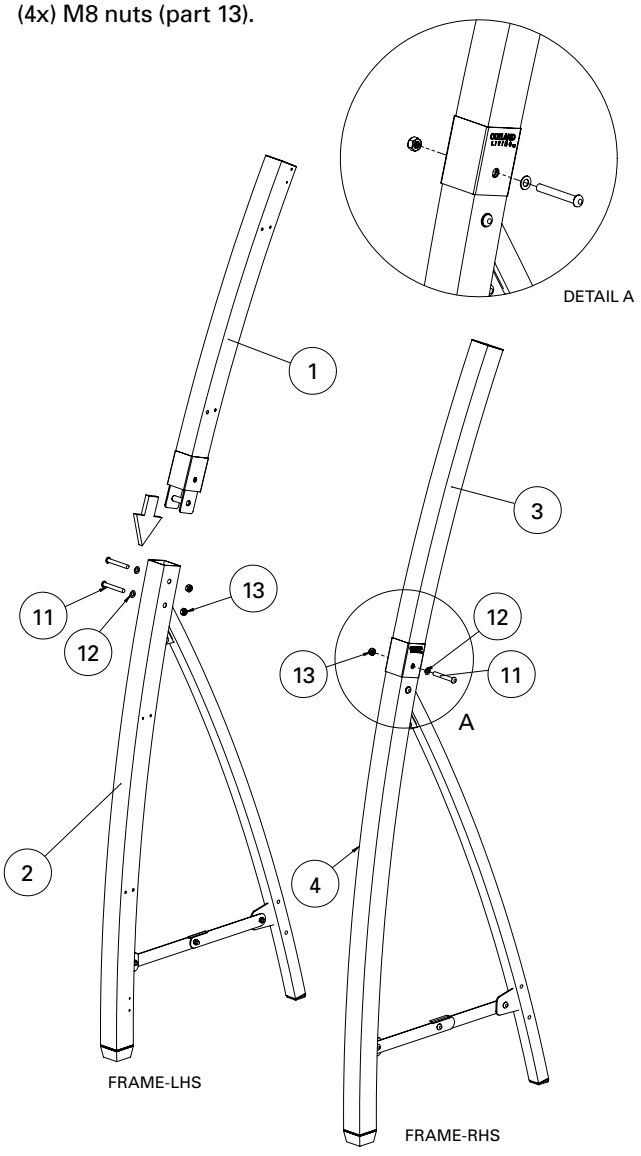

STEP 2

Assemble the frame.

a. Assemble the lower Front Cross Bar (part 5) to Frame_LHS and Frame_RHS using (x4) M6x16 screws (part 8) and (4x) M6 plastic washers (part 10).

b. Attach Rear Cross Bar to rear legs using (4x) M6x40 screws (part 9) and (4x) M6 plastic washers (part 10).

c. Assemble the upper Front Cross Bar (part 5) to Frame_LHS and Frame_RHS using (x4) M6x16 screws (part 8) and (4x) M6 plastic washers (part 10).

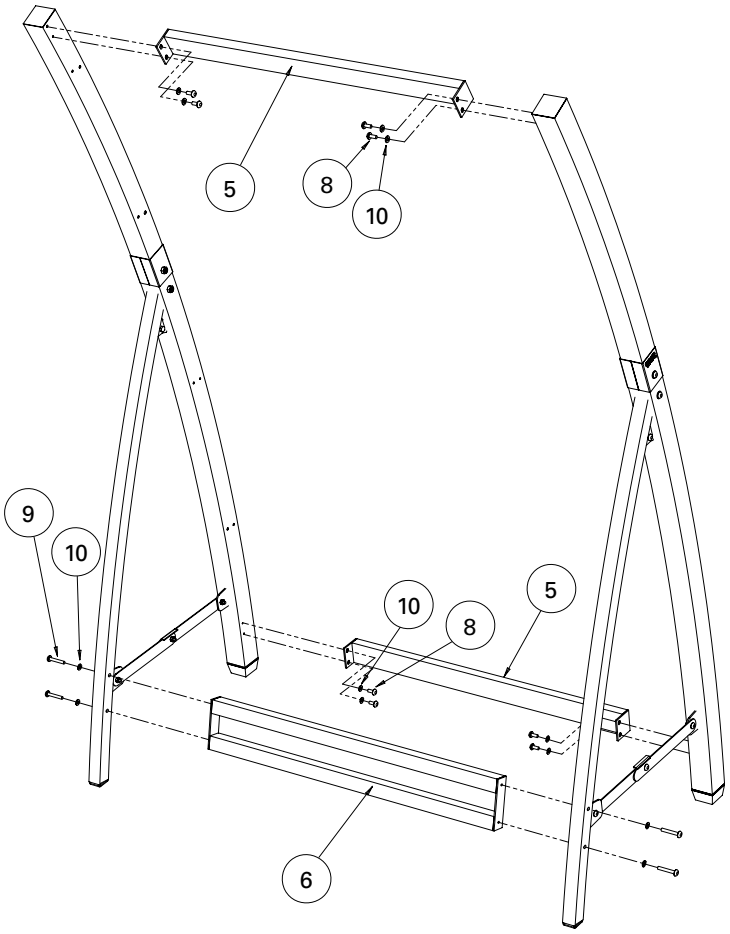

SECTION 1: ASSEMBLY (continued)

STEP 3

Attach (x8) Bin Hangers (part 7) to frame using (x16) M6x16 screws (part 8) and (16x) M6 plastic washers (part 10) - NOTE ORIENTATION OF BIN HANGER IN DRAWING DETAIL B

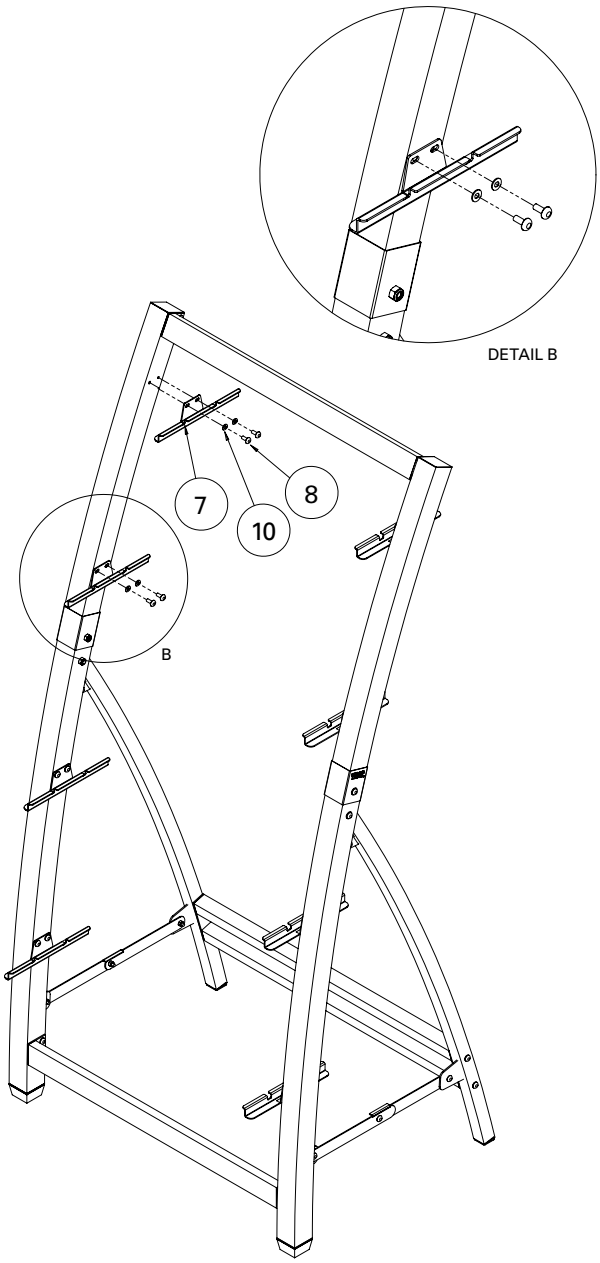

STEP 4

Place the Plastic Planter Bins (part 14) on the Bin Hangers.

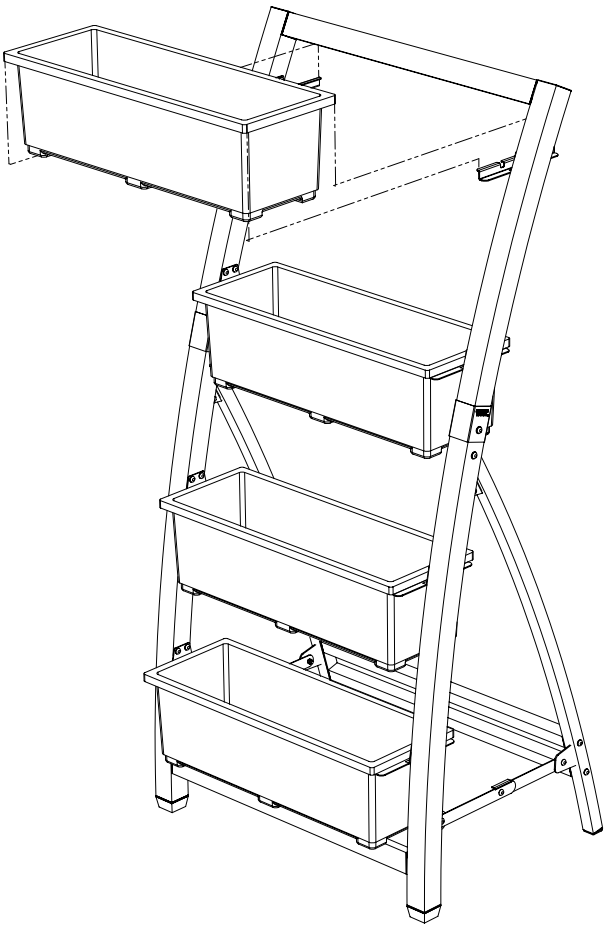

IMPORTANT: FACE THIS WAY FRONT.

Note the pre-drilled drainage hole location in each plastic planter bin. Ensure these holes are placed front facing in the frame so water drains into each bin below, in a cascading fashion, as shown in the illustration. Otherwise, water drainage will occur on the ground (or floor) below.

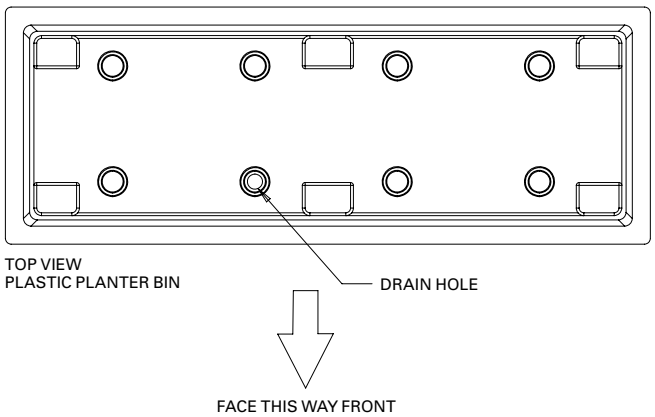

SECTION 1: ASSEMBLY (continued)

STEP 5

Add your preferred volume of Potting Soil Mix. (Soil not included). Plan your budget for 28L (25 Quarts) of soil mix per bin and/or adjust the volume of soil to suit your need.

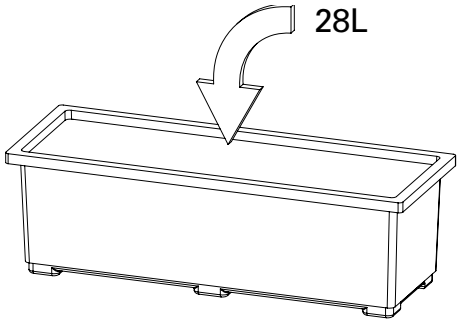

SOIL BUDGET ASSUMPTION:

Each planter bin is 680mmLx250mmWx210mmH (26.8″Lx9.8″Wx8.3″H)

SOIL BUDGET/1 BIN	SOIL BUDGET/4 BINS
1 cubic foot (ft^3)	4 cubic feet (ft^3)
.04 cubic yard (yd^3)	.15 cubic yard (yd^3)
25 Imperial Quarts	100 Imperial Quarts
28 Litres (L)	113 Litres (L)

Gardening Indoors or on a Patio Deck? Install the supplied Drain Plug (part 15).

a. Using the drain plug in the lowest bottom bin prevents water drainage and allows you to garden indoors, or on your patio deck, with your OUTLAND Vertical Garden.

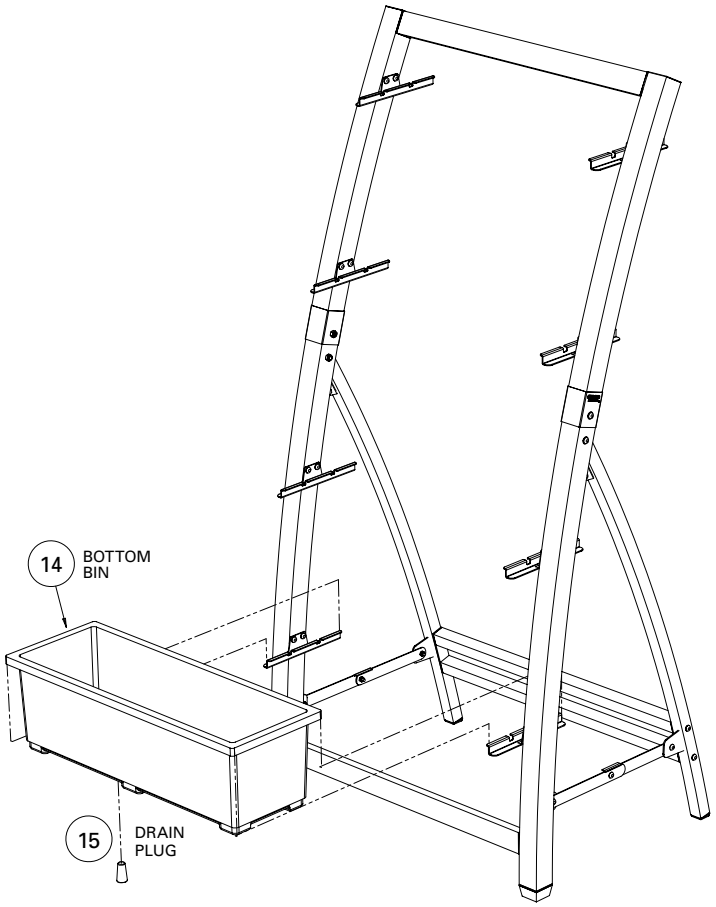

b. Fit the drain plug up into the bottom bin drain hole from underneath. See DRAWING DETAIL. Fitting it up from underneath allows you to remove it, in the future, should you desire to manually drain the bottom planter bin.

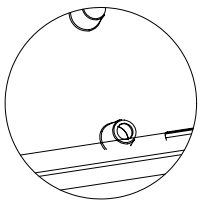

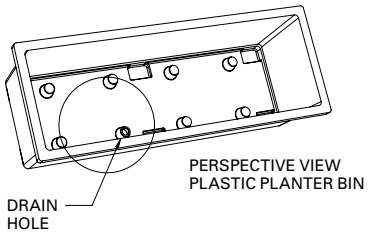

SECTION 1: ASSEMBLY (continued)

c. Removing the drain plug allows excess water to drain out of the lowest plastic planter bin. When indoor, or patio gardening, place a tray under the bottom bin before removing the drain plug.

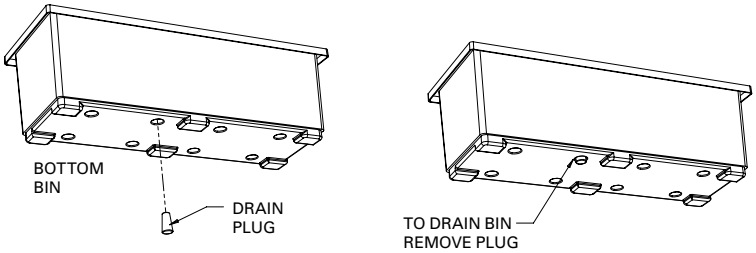

Outdoor Gardening? No need to install the drain plug. Gardening without the drain plug allows excess rain water to flow through the bins to the ground below.

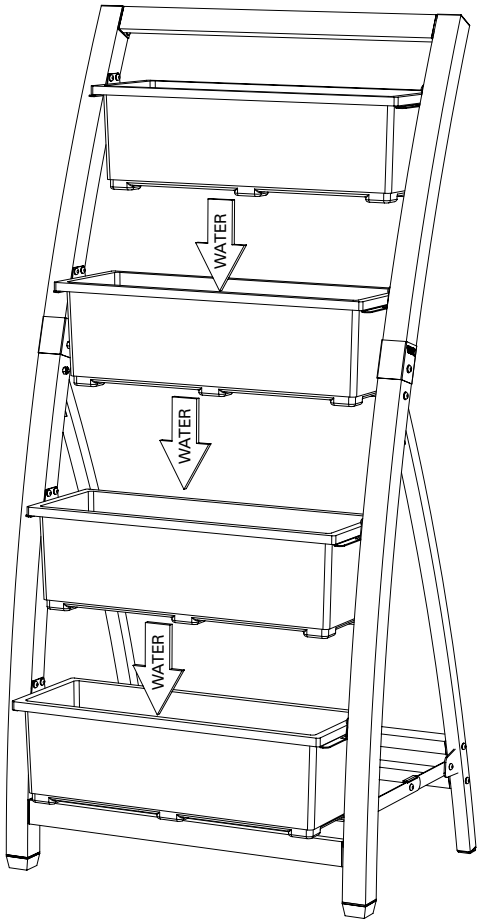

Your OUTLAND Vertical Garden is ready to use indoors or outdoors.

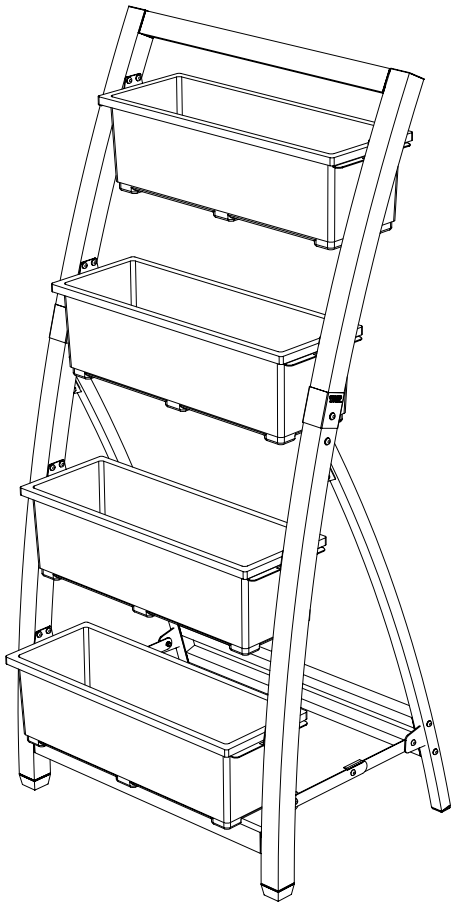

IMPORTANT

• Always ensure Vertical Garden stands straight and level.

IMPORTANT

• Always ensure all fasteners are firmly tightened.

SET UP INSPECTION SEQUENCE:

The Vertical Garden should be inspected before use and at least annually. More frequent cleaning and/or adjustments may be required as necessary.

Prior to each use:

- Ensure placement is on a level and firm surface able to hold the fully loaded weight of the frame, which is approximately 60-70Kg (130-160lb)

- Ensure no parts are missing and all fasteners are firmly tightened.

SECTION 2: MAINTENANCE

Your Outland Vertical Garden is meant for indoor or outdoor use and requires periodic maintenance to keep it in good condition.

- Should any part of this appliance become soiled or dirty, wipe down with a damp wet cloth. Use only water based cleaners.
- Check fasteners and ensure firmly tightened.
- Should you experience water dripping from the drainage holes in ways which are obviously unintended, or detrimental to your home, we recommend the following trouble shooting:
    i. confirm the vertical garden is sitting level
    ii. confirm each bin is sitting level on the bin hanger
    iii. confirm each drainage hole is positioned above the bin below
    iv. confirm your lovely plants aren't redirecting flow
    v. confirm the drain plug stopper is securely installed in the lowest bottom bin drainage hole
    vi. If you've exhausted the above and pesky water seepage is still finding its way (because we all know it sometimes does!), we recommend to find a small piece of hose or tubing to fit snugly inside the problematic drainage hole(s). Align the tubing so the flow of dripping water actually falls where you want it to fall.

IMPORTANT
Do not use petroleum based, flammable or corrosive cleaning products on or near this unit.

This appliance is NOT a toy.

> ⚠ **WARNING:**
> Do not climb on the Vertical Garden or use it as a ladder or serious injury, property damage and/or death may occur.

SECTION 3: STORAGE

Your Vertical Garden has been designed to conveniently store away when not in use.

We recommend to store your Vertical Garden under cover during winter, or when not in use.

Follow these instructions to ready for storage:

1. Remove plastic Planter Bins from frame.
2. Fold Rear Legs in.
3. Store conveniently. See you next season.

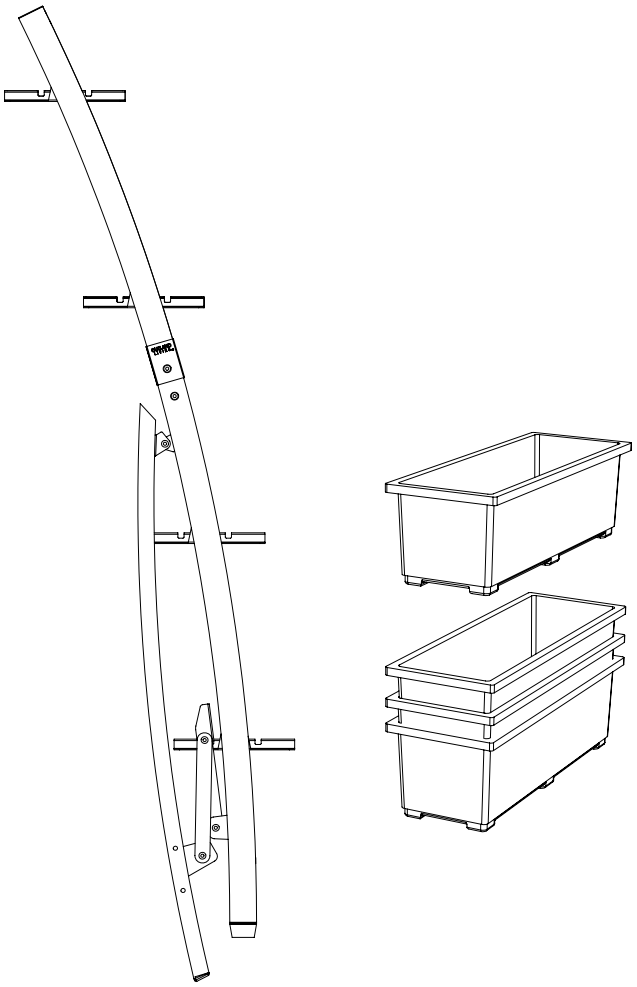

NOTES:

- The Vertical Garden measures 70" High and stands in a compact footprint of 32" Wide x 23" Deep.
- Select your preferred potting mix and budget for approximately 28L (25 quarts) of soil per bin. Adjust soil volume to match your need.
- The planter bins are 8" Deep with a 1" water reservoir.

THIS LIST OF RECOMMENDED CROPS FOR YOUR VERTICAL GARDEN IS BY NO MEANS COMPLETE, BUT SHOULD HELP PROVIDE SOME IDEAS TO START YOUR GREEN THUMB:

- Lettuce (leaf varieties)
- Spinach
- Radish
- Arugula
- Baby Carrots
- Beets
- Chard
- Onions (Green, Scallion)
- Asian Greens (Tatsoi, Pak Choy, Mizuna, Gai-lon)
- Determinate (bush) tomato plants (small cherry tomatoes, salad varieties)
- Herbs (Basil, Thyme, Tarragon, Rosemary, Oregano, Cilantro, Dill, Savory, Mint, Sage, Chives, Bay, Parsley, Coriander, Sorrel, Lemongrass)

HERE IS A LIST OF ANNUALS FLOWERS WHICH YOU MAY LIKE TO TRY IN YOUR VERTICAL GARDEN:

- Alyssum
- Begonia
- Browallia
- Coleus
- Geraniums
- Impatiens
- Latana
- Lobelia
- Marigolds
- Periwinkle
- Nasturtiums
- Pansies
- Petunias
- Salvia
- Sanvitalia
- Snapdragons
- Thunbergia
- Zinnias

- Note that plants grown in containers typically need to be watered more frequently than plants grown in the ground. We recommend to monitor your soil moisture and water regularly.
- For best results, consult your local nursery for gardening tips when purchasing your garden materials.

STOP:

Do <u>not</u> return this product to the store.

If you need help or parts, call the OUTLAND Hotline: **1-888-514-1663**

Get help for:

Missing/damaged parts • Assembly • Troubleshooting • Warranty Assistance • Product Information

1 YEAR LIMITED WARRANTY

Customers in Canada and USA

All components are warranted by the manufacturer for a period of 1 year after date of purchase by the original owner against defects in materials and workmanship under normal use. This warranty does NOT cover normal wear and weathering, assembly and/or maintenance OR use in a commercial application. At FMI Brands' sole discretion, products under warranty will be repaired and/or replaced at no charge to the customer. Any returns sent back to FMI Brands must be sent via prepaid freight and in the original retail packaging.

Please register your OUTLAND Living product for proof of purchase and warranty at

http://outlandliving.com/register-products/

For more warranty information and details please contact FMI Brands Inc. at info@outlandliving.com

FOR REPLACEMENT PARTS AND ACCESSORIES PLEASE VISIT
WWW.OUTLANDLIVING.COM

The owner's manual is available as a free download from **www.outlandliving.com**

Replacement part orders can be sent by mail to the address on the cover of this booklet, or faxed to **(888) 797-9931.** Should you have any questions or comments regarding this product, please do not hesitate to contact FMI Brands Inc. at **(888) 514-1663** or E-Mail to **info@outlandliving.com**.

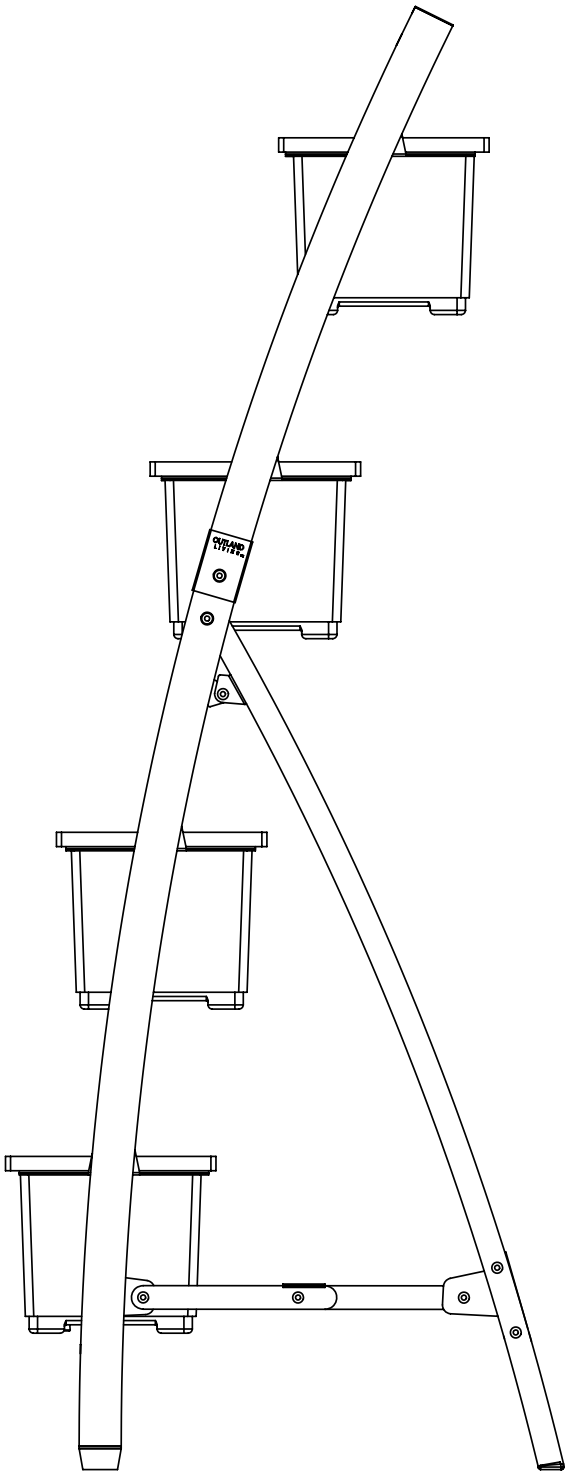

OUTLAND LIVING™

VERTICAL GARDEN