OUTLAND LIVING®

OWNER'S MANUAL

Patio Tomato Garden

OUTDOOR LIVING PERFECTED®

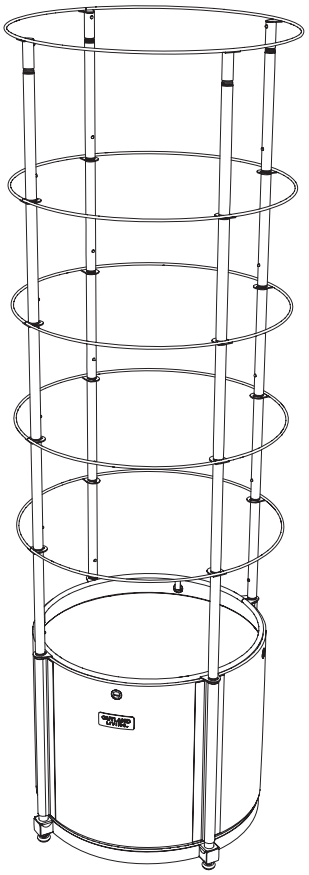

Model: OLVG-326

D.OLVG-326.000.V0

FMI BRANDS INC.
107 – 19052 26 Avenue | Surrey, B.C. Canada V3Z 3V7 | Toll Free 1-888-514-1663 | Fax 1-888-797-9931

Outland Living is a registered trademark of FMI Brands Inc. The OUTLAND Flame mark is a registered trademark of FMI Brands Inc.

Owner & Safety Manual

Model number OLVG-326

⚠ CAUTION:

Watch for sharp edges.
Wear protective gloves if necessary.

⚠ WARNING:

Improper installation, adjustment, alteration, service or maintenance can cause injury or property damage. Read the installation, operating and maintenance instructions thoroughly before installing or servicing this equipment.

NOTE TO INSTALLER:
Leave this guide with the consumer.

NOTE TO CONSUMER:
Please retain this guide for future use.

SUPPLIED PARTS & HARDWARE LIST:

PART #	DESCRIPTION	PICTURE
1	Planter Base (x1)	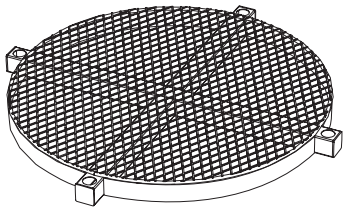
2	Planter Support Tube (x4)	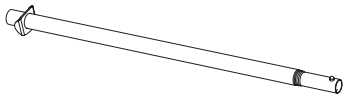
3	Planter Bag (x1)	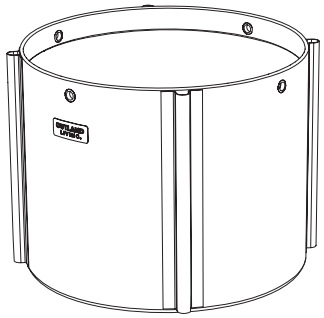
4	Threaded Foot (x4)	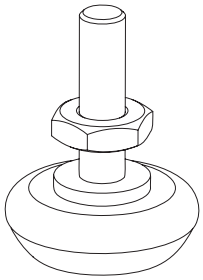

PART #	DESCRIPTION	PICTURE
5	Planter Bag Support Ring (x1)	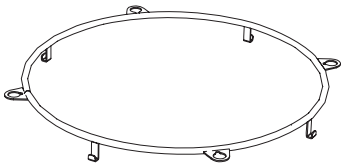
6	Vertical Support Tubes (x20)	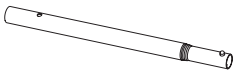
7	Middle Ring (x4)	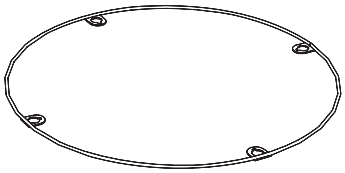
8	Top Ring (x1)	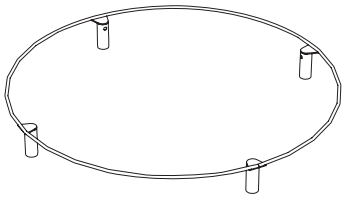
9	Wrench (x1)	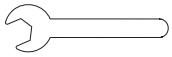
10	Roll of hook-and-loop fastener	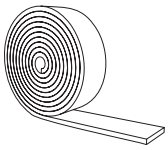

SECTION 1: ASSEMBLY

STEP 1a
Remove all components from the packing box. Ready the planter base (part 1), 4x planter support tubes (part 2) and 4x threaded feet (part 4).

STEP 1b
Spin the nuts on the 4x feet all the way down to the base of the threaded stems.

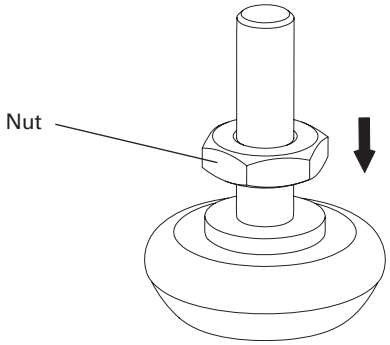

STEP 2a
Insert (x1) planter support tube (part 2) into the planter base.

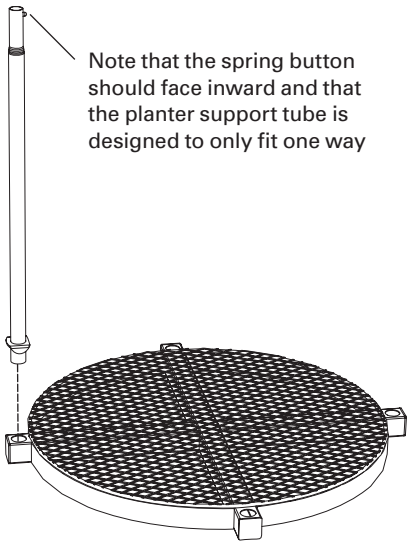

STEP 2b
Screw in (1x) threaded foot (part 4) to attach the support tube to the base. Screw the foot all the way in to snug up the tube. For now, keep the connection firm, but finger tight.

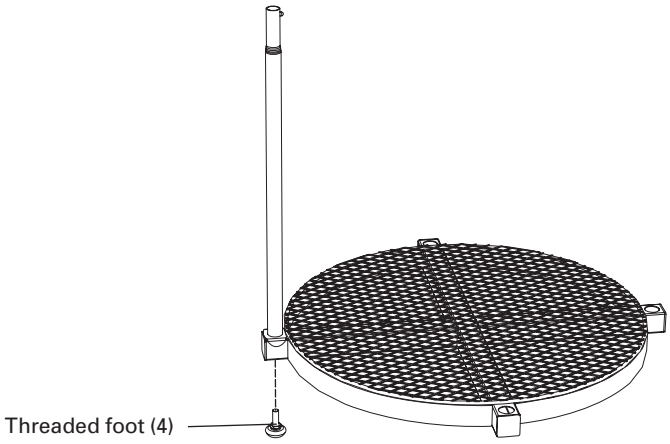

STEP 2c
Repeat steps 2a and 2b for the remaining (x3) planter support tubes and (x3) threaded feet.

ASSEMBLY TIP: Set the planter base on its side so that it is easier to install the support tube and threaded foot to the base.

SECTION 1: **ASSEMBLY (continued)**

STEP 3
Stand the base assembly on its feet.

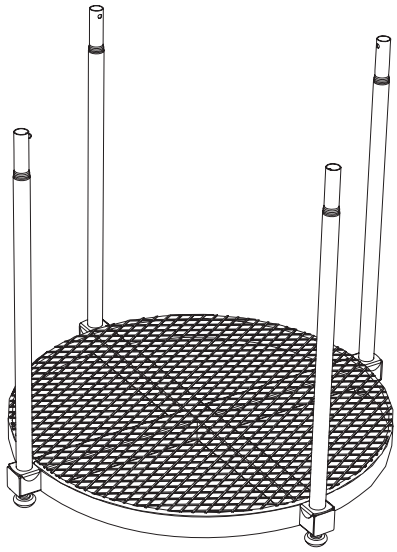

STEP 4
Install the planter bag (part 3) by sliding the loops down, over the planter support tubes.

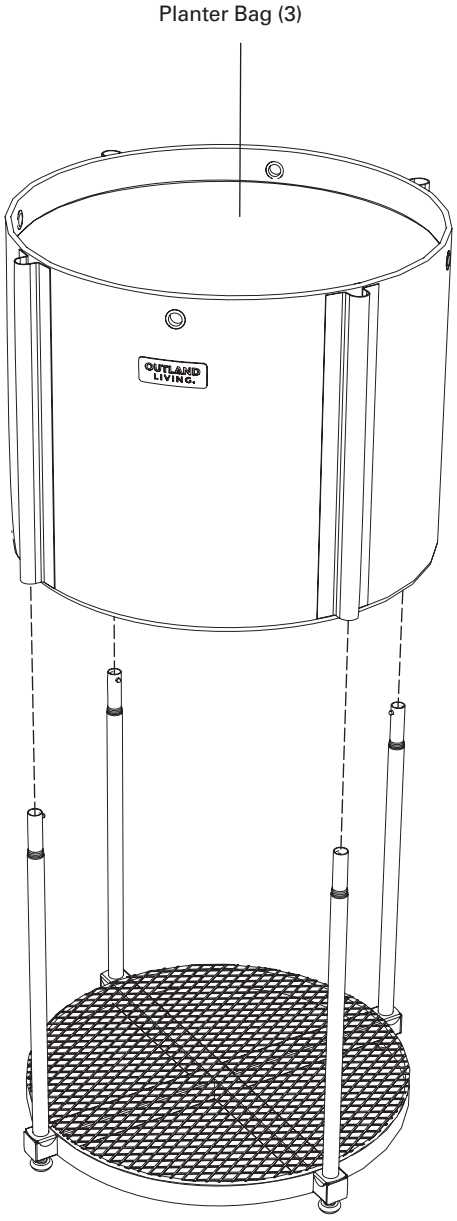

SECTION 1: ASSEMBLY (continued)

STEP 5a
Install the planter bag support ring (part 5).



STEP 5b
Attach planter bag grommets over the planter support ring hooks.

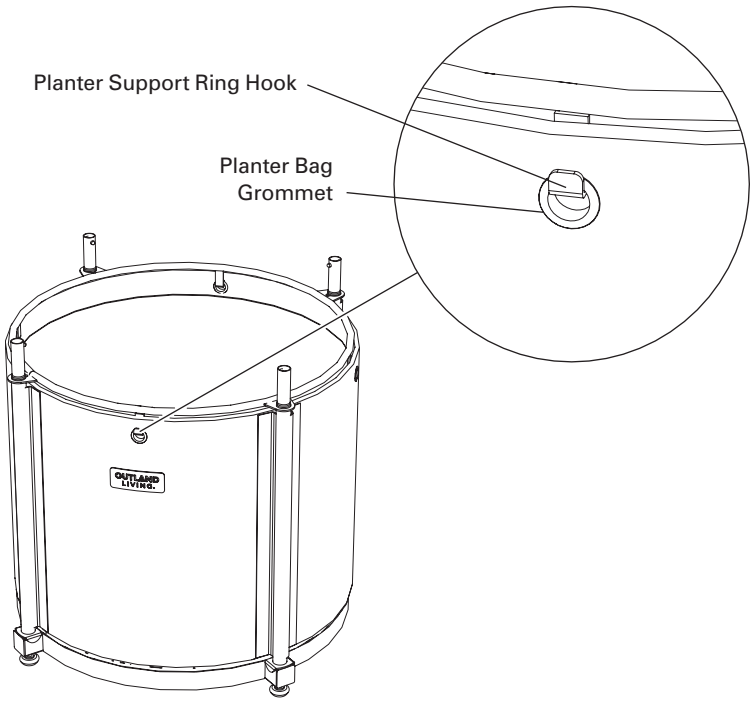

SECTION 1: **ASSEMBLY (continued)**

STEP 6a
Place the base and bag assembly in the location and direction you wish to display your garden. It may be necessary to adjust the feet so that the base is level and not wobbly.

NOTE: To adjust and level the feet, turn the foot counterclockwise until it contacts the floor, then spin the nut up to tighten.

STEP 6b
Once the feet are adjusted and the base is level, tighten the four nuts using the supplied wrench (part 9).

STEP 7
Install (x4) vertical support tubes (part 6). Ensure that the spring buttons are facing inwards.

NOTE: Push down hard enough so that the spring button from the level below fully snaps into place. You may need to wiggle and adjust the tube position to allow the spring button to pop through the hole in the vertical support tube.

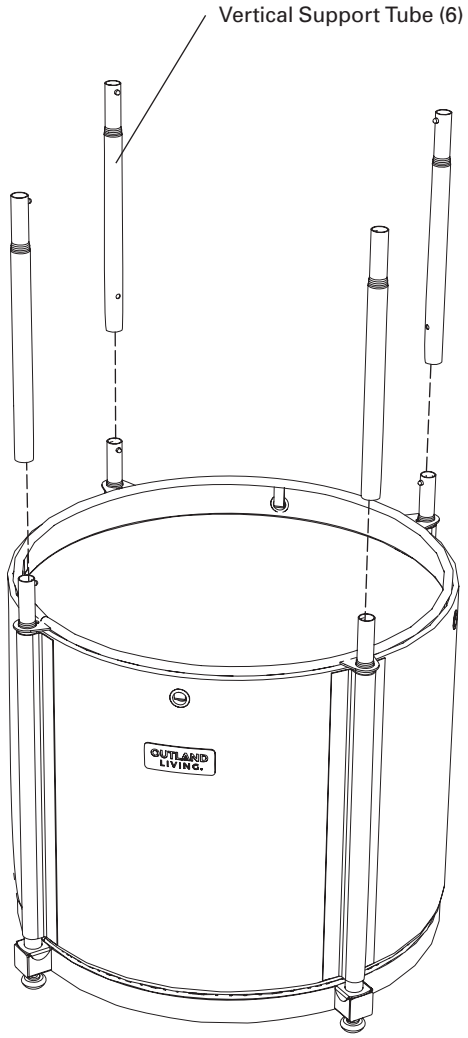

SECTION 1: ASSEMBLY (continued)

STEP 8
Install (x1) middle ring (part 7).



STEP 9
For each level, repeat steps 7 and 8. Each level will require an additional (x4) support tubes and (x1) middle ring. Always ensure the spring buttons are facing in and engaging the holes.

NOTE: Your tomato garden is five stages high and comes with 4 middle ring levels and one top ring.

SECTION 1: **ASSEMBLY (continued)**

STEP 10

For the fifth and final stage, place the top ring over the last four support tubes (part 8). Ensure the spring buttons are engaging the holes.

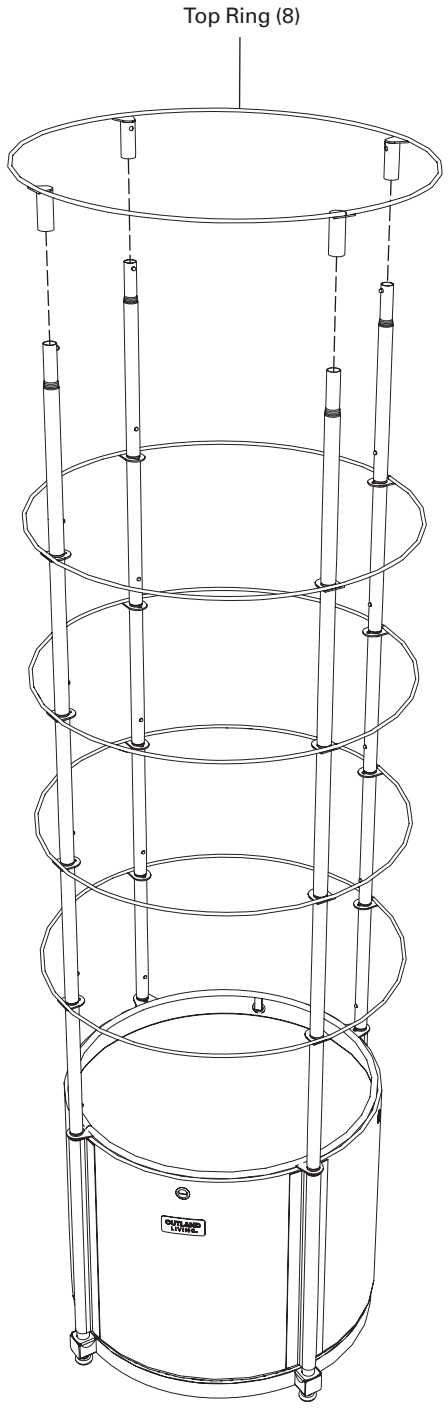

Congratulations! Your Patio Tomato Garden is now ready for use!

TIP: Locate the garden where it will be displayed BEFORE filling with dirt. Make sure the garden is standing level. Adjust feet, as necessary. Then, fill with dirt. Plant. Enjoy. Harvest!

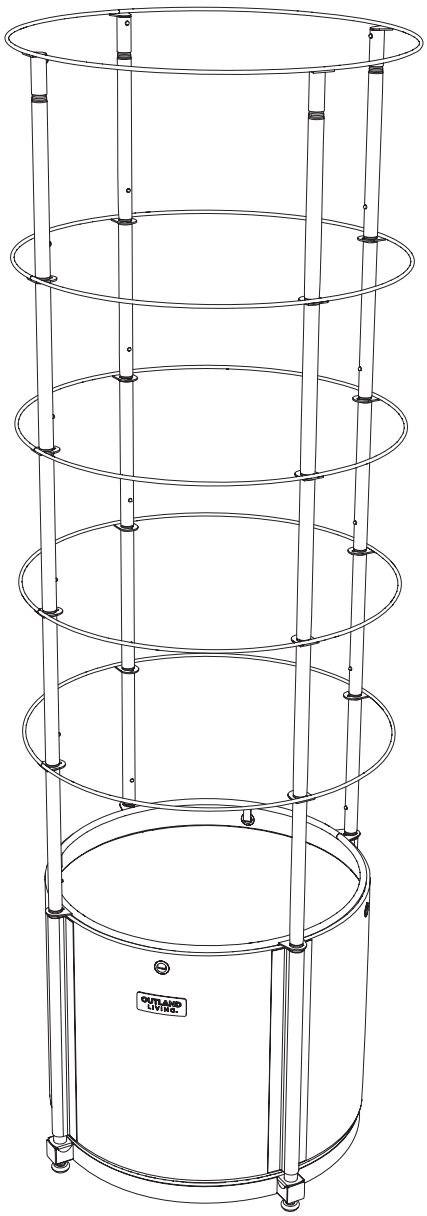

SECTION 2: PLANTER GARDENING

APPROXIMATE DIMENSIONS

The dimensions of the planter bag are approximately 500 mm diameter x 400 mm high (19.7" diameter x 15.75" high).

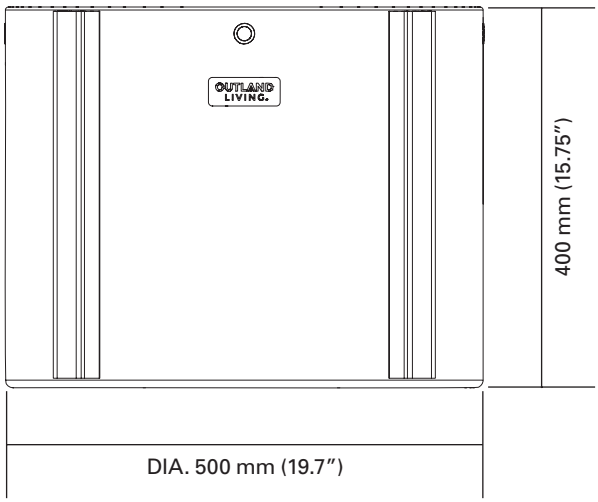

SOIL BUDGET ASSUMPTION

Add your preferred type and volume of potting soil mix. (Soil not included). Plan your soil budget for 75L (20 Gal) of soil mix and/or adjust the volume of soil to suit your need.

SOIL BUDGET
75 Litres (L)
20 US Gallon
2.67 cubic foot (ft^3)
.1 cubic yard (yd^3)
.075 cubic meter (m^3)

TRAINING AND TYING YOUR CROP

You may use string, or twine, to lift and guide your plants, as they grow.

TIP: Use OUTLAND brand hook- and- loop fasteners as a convenient way to tie your stems, leaves and fruit to the garden frame. A starter roll is included with your garden. Use scissors to cut strips to length. Order more supplies from outlandliving.com

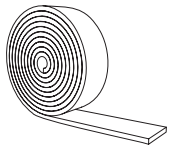

If you have a super green thumb and you've got a bumper crop of indeterminate tomatoes that needs more height you can order a 533 mm (21") two stage height extension accessory kit for your tomato garden from outlandliving.com.

Some people may want to place a wood or bamboo pole, or metal stake, in the middle of the tomato garden to tie the crop to. This is optional and preferential.

USES FOR THE OUTLAND PATIO TOMATO GARDEN

Determinate Tomatoes

Generally, the 'determinate' tomato plant, or 'bush' tomato plant, will only grow to a maximum height of about 4ft. They have a short growing season, with one harvest. One example is 'Cherry' tomatoes. Check other varieties with your local nursery.

Indeterminate tomatoes

The indeterminate tomato plant keeps on growing and producing all summer long. As a 'vining' tomato they can grow up to 20ft long! If you let them. These tomato varieties are usually the larger type like 'Beefsteak' tomatoes. Check other varieties with your local nursery. Visit outlandliving.com to purchase a 533 mm (21") 2-stage height accessory extension for your tomato garden.

OK, so what other types of fruit and vegetables could you grow in this garden if you wanted to? How about:

- Indeterminate Tomatoes
- Determinate Tomatoes
- Cucumbers
- Squash
- Melons
- Peas
- Beans

Order more tomato gardens from outlandliving.com

SECTION 3: SET UP INSPECTION SEQUENCE

The tomato garden should be inspected before use and at least annually. More frequent cleaning and/or adjustments may be required as necessary.

Prior to each use:

Ensure the tomato garden is placed on a level and firm surface able to hold the fully loaded weight of the frame and harvest. The actual weight will vary, depending on the type of soil used, how moist the soil is and how much crop weight is present. A reasonable forecast is approximately 100 - 136 kg (220 - 300 lbs).

- Ensure no parts are missing and all fasteners are firmly tightened.

SECTION 4: MAINTENANCE

Your Outland Patio Tomato Garden is meant for indoor or outdoor use and requires periodic maintenance to keep it in good condition.

Do not over-water. Too much water can drown your plants or promote root and stem rot. Consult your local plant nursery for specific information about your garden's needs.

The felt grow bag material is breathable, which is healthy for your garden root structure. If the soil becomes oversaturated with water, the felt bag may leak brown water. This is normal. We recommend placing a drip tray, or mat, under the base

To control rainwater exposure, we recommend locating the tomato garden under eaves, or awnings. If there is a chance that the garden may become over saturated with water, or rainwater, we recommend placing a drip tray, or mat, under the base.

Should any part of this appliance become soiled or dirty, wipe down with a damp wet cloth.

⚠ IMPORTANT:

Do not use petroleum based, flammable or corrosive cleaning products on or near this unit.
This appliance is NOT a toy.

⚠ WARNING:

Do not climb on the Patio Tomato Garden or use it as a ladder or serious injury, property damage and/or death may occur.

⚠ WARNING:

Do not drag or push the Patio Tomato Garden with a fully loaded planter bag! At worst, the frame could fail, or fall, causing serious injury, or death. At minimum, it could damage your floors.

SECTION 5: STORAGE

Your Patio Tomato Garden has been designed to conveniently store away when not in use.

We recommend storing your Patio Tomato Garden under cover during winter, or when not in use.

Follow these instructions to get ready for storage:

- Remove the top ring, middle rings, and vertical support tubes. Set aside.
- Remove the Planter Bag from frame.
- Store conveniently. See you next season.

OUTLAND LIVING

Owner & Safety Manual



Do not return this product to the store.

If you need help or parts, call the OUTLAND Hotline: **1-888-514-1663**

Get help for:

Missing/damaged parts • Assembly • Troubleshooting

• Warranty Assistance • Product Information

1 YEAR LIMITED WARRANTY

Customers in Canada and USA

All components are warranted by the manufacturer for a period of 1 year after date of purchase by the original owner against defects in materials and workmanship under normal use. This warranty does NOT cover normal wear and weathering, assembly and/or maintenance OR use in a commercial application. At FMI Brands' sole discretion, products under warranty will be repaired and/or replaced at no charge to the customer. Any returns sent back to FMI Brands must be sent via prepaid freight and in the original retail packaging.

Please register your OUTLAND Living product for proof of purchase and warranty at

https://outlandliving.com/register-products/

For more warranty information and details please contact FMI Brands Inc. at info@outlandliving.com

FOR REPLACEMENT PARTS AND ACCESSORIES PLEASE VISIT WWW.OUTLANDLIVING.COM

This Owner's Manual is available as a free download from **www.outlandliving.com**.

Should you have any questions or comments regarding this product, please do not hesitate to contact FMI Brands Inc. at (888) 514-1663 or E-Mail to info@outlandliving.com