PART NUMBER 791

OUTLAND LIVING™ FIRE TABLE

Fire Table Glass Lid and Mounting Bracket Kit

OUTDOOR LIVING PERFECTED™

COMPATIBLE WITH OUTLAND LIVING FIRE TABLE MODELS:			
TICK	**SERIES NAME**	**MODEL NUMBERS**	**SERIES NUMBERS**
☐	OUTLAND FIRE TABLE	FMPPC2E, FMPPC2E-1, FMPPC2E-403	400, 401, 403

Dimension (WxL): 12.75" x 28.75" (325mm x 730mm)

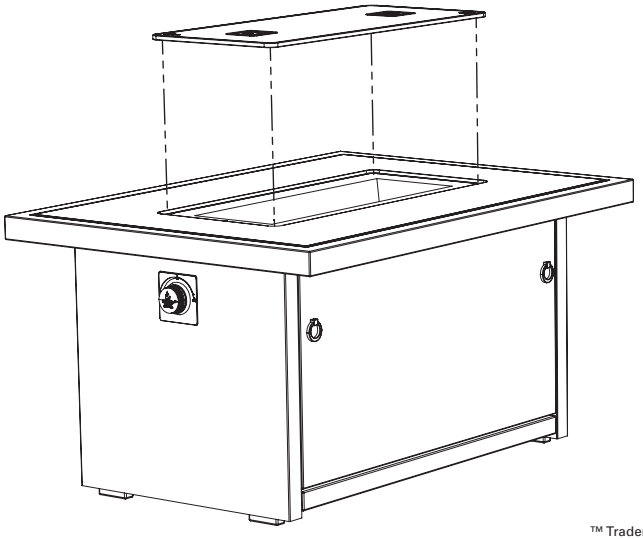

™ Trademark of FMI Brands Inc.

D.791.000.V6

FMI BRANDS INC.
107 – 19052 26 Avenue | Surrey, B.C. Canada V3Z 3V7
Toll Free 1-888-514-1663 | Fax 1-888-797-9931

SUPPLIED PARTS & HARDWARE LIST:

PART NUMBER	DESCRIPTION	QUANTITY	PART
1	Front Mounting Bracket - Part 1	1	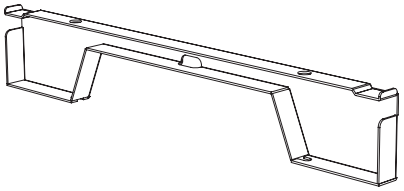
2	Rear Mounting Bracket - Part 2	1	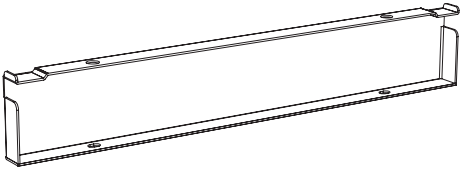
3	M6 screw	5	
4	Glass Lid	1	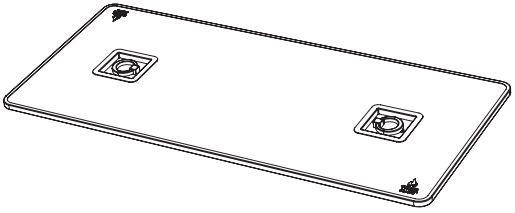

ASSEMBLY INSTRUCTIONS

⚠ WARNING:

Make sure the fire table is off and has cooled down for at least 30 minutes before performing this installation. Never attempt this installation with the table in operation, or while it is still hot.

STEP 1

Remove glass rocks.

⚠ WARNING:

Use gloves when removing glass rocks. Glass rocks may have sharp edges and glass dust may leave slivers.

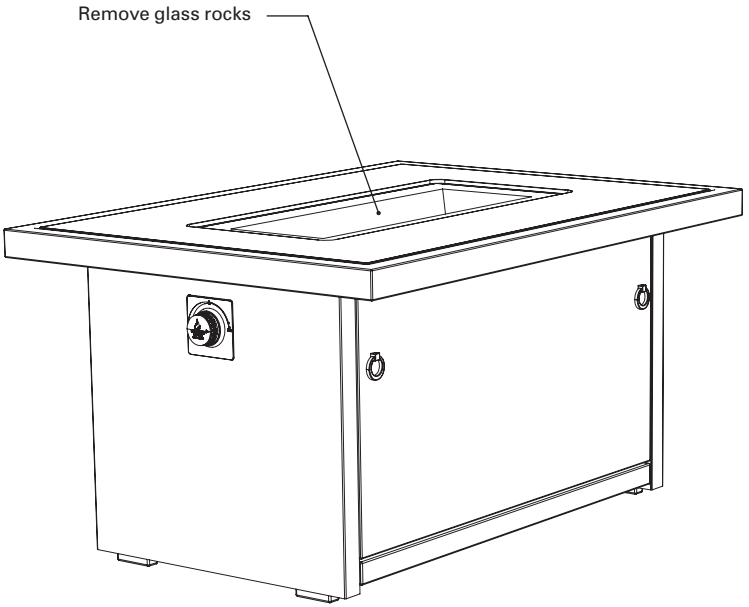

ASSEMBLY INSTRUCTIONS (continued)

STEP 2

Remove both side panels.

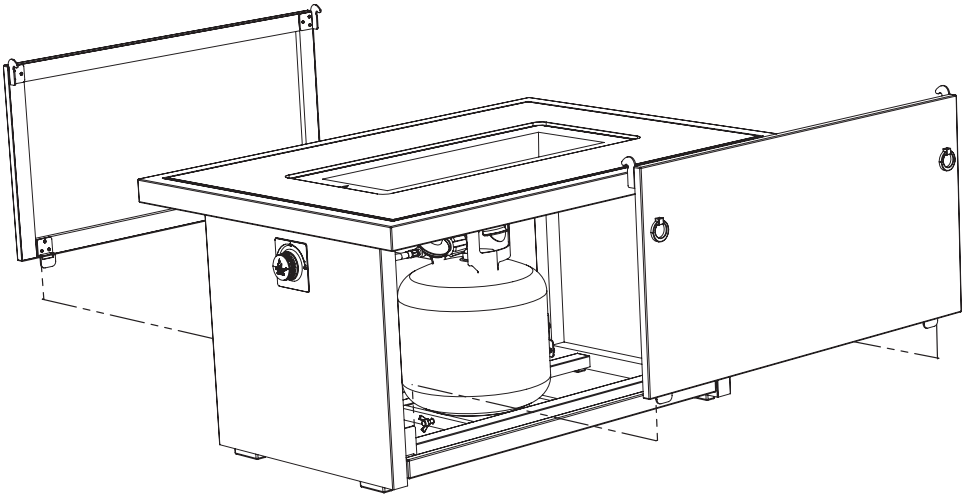

STEP 3

a. Close valve on propane cylinder. Disconnect and remove the propane cylinder from Fire Table.

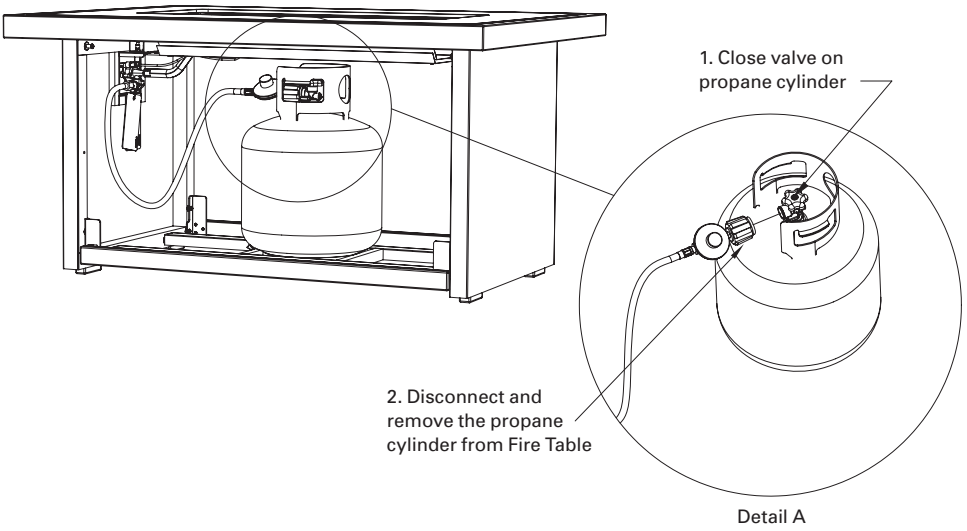

STEP 3 (continued)

b. Remove propane cylinder support base.

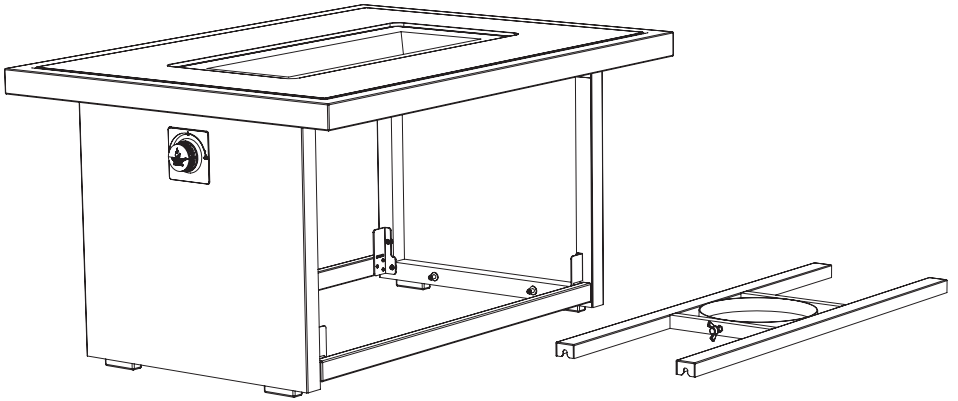

STEP 4

Remove glass top.

> ⚠ **WARNING:**
>
> Do not put glass top down on tile, concrete or other hard surface as the tempered glass may chip, or explode! Set glass down on a flat protective surface such as a blanket, cardboard, oversize towel, etc.

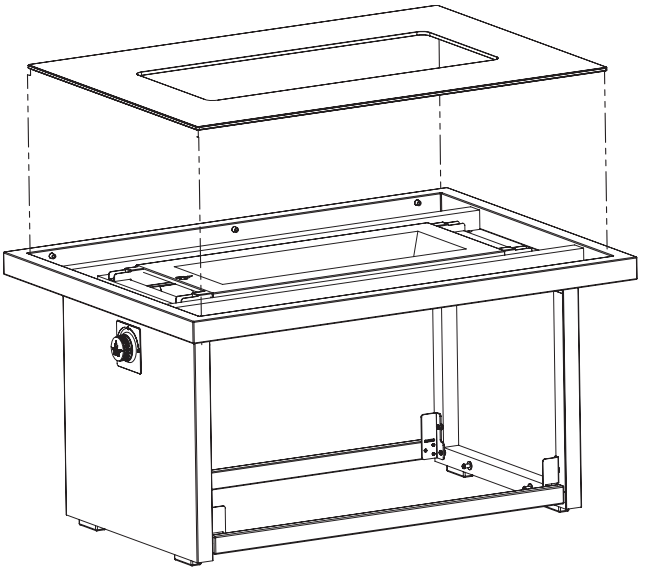

ASSEMBLY INSTRUCTIONS (continued)

STEP 5

Turn Fire Table over and gently place upside down (top down) on flat protective work surface so not to damage wicker. We recommend this to be a two person job.



HEAVY OBJECT.
TWO PERSON LIFT REQUIRED.

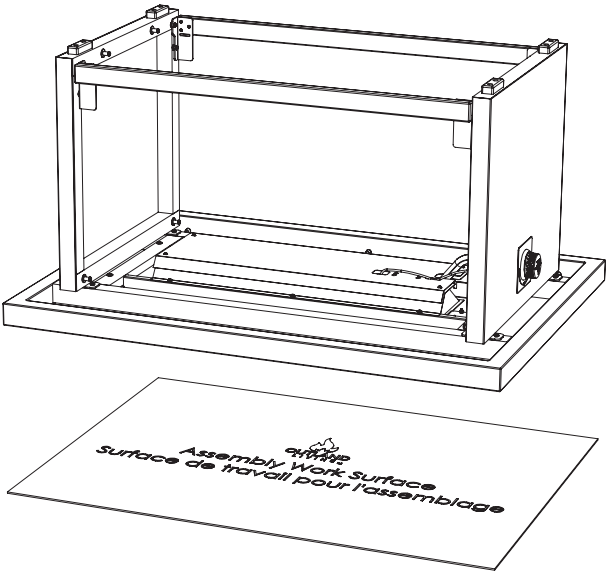

STEP 6

Locate and remove the two (2) screws at the front of heat shield. See the drawing detail for visual instruction.

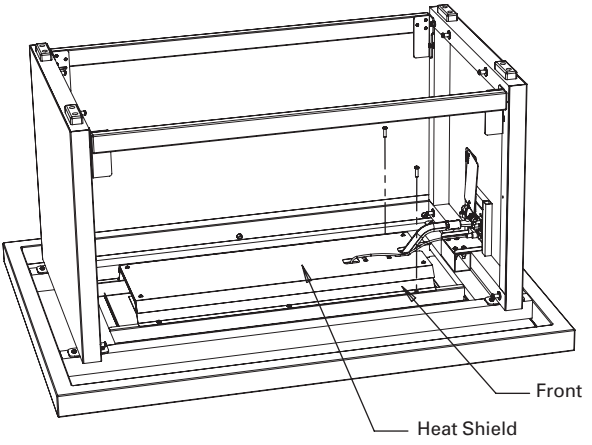

STEP 7

Install the front mounting bracket (Part 1), in the same location, using the two supplied screws. Note the direction of the bracket in the diagram - Detail B.

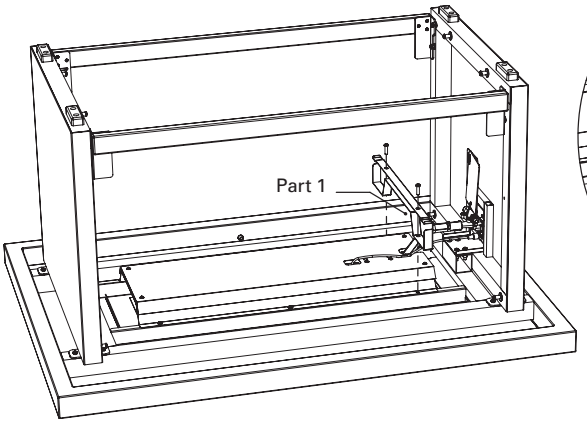

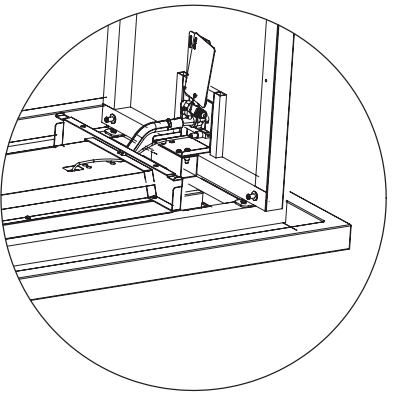

Detail B

STEP 8

Install the rear mounting bracket (Part 2) using the two supplied screws. Note the direction of the bracket in the diagram - Detail C.

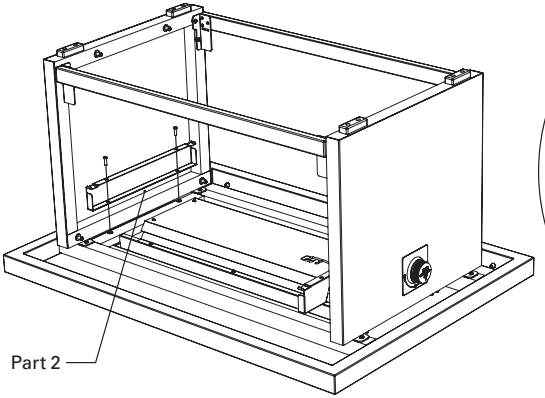

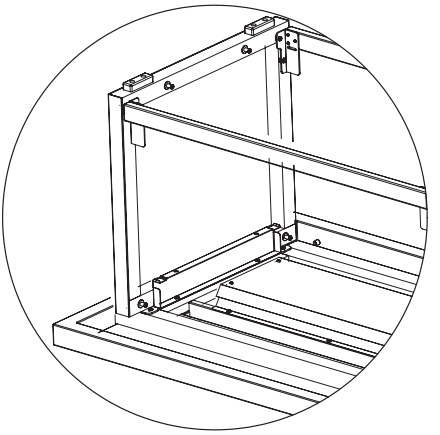

Detail C

Double check and confirm the direction of both brackets in the diagrams.
Done. Your glass lid brackets are now installed.

ASSEMBLY INSTRUCTIONS (continued)

STEP 9

Reverse Set Up:

a. Turn Fire Table right side up. (CAUTION! Two person lift required.)

b. Replace Glass Top.

c. Install propane cylinder support base.

d. Install propane cylinder and perform a leak test as per your manual instructions.

e. After the leak test confirm the ignition works.

f. Replace Side Panels

g. Replace glass rocks in burner tray.

h. Deploy glass lid on Fire Table, or store it under the Fire Table.

DEPLOYMENT

Place Glass Lid on top of OUTLAND Fire Table.

Note: It may be necessary to adjust the position of glass rocks to have the Glass Lid sit flush on the fire table.

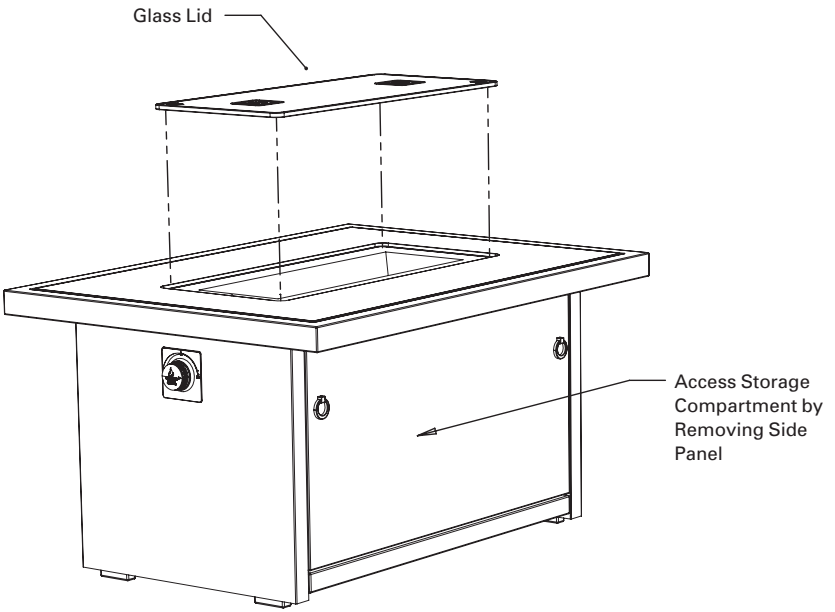

STORAGE

To store your glass lid while the Fire Table is in use:

1. Remove the side panel to access the compartment.
2. Locate the Glass Lid storage brackets below the heat shield.
3. Slide the Glass Lid in far enough so it seats in the retaining features. Done.

REMOVAL

To remove the glass lid:

1. Lift front edge slightly to clear the small retaining feature and pull Glass Lid out.

⚠ CAUTION:

Always remove the Glass Lid before attempting to remove the propane cylinder. Failure to do so may result in damaging, or breaking your Glass Lid.

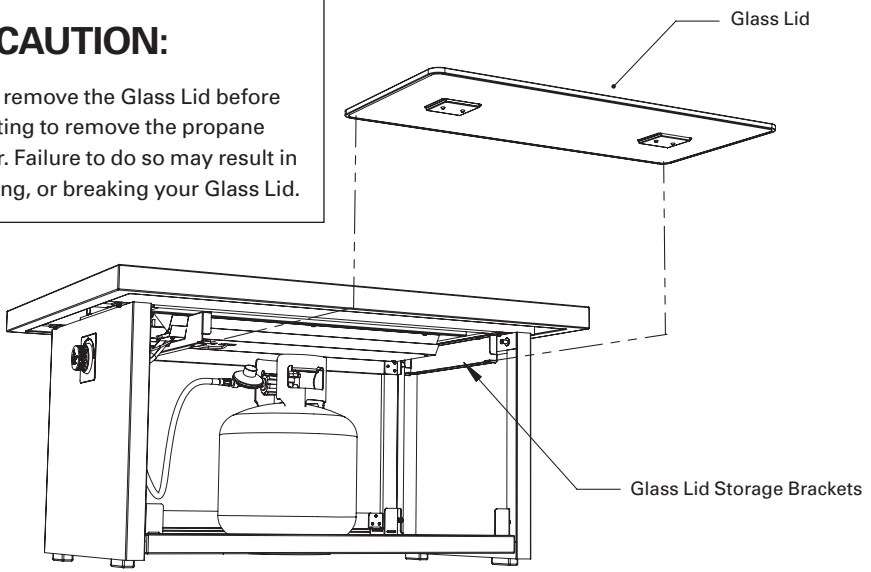

⚠ CAUTION:

Do not drop lid during handling.

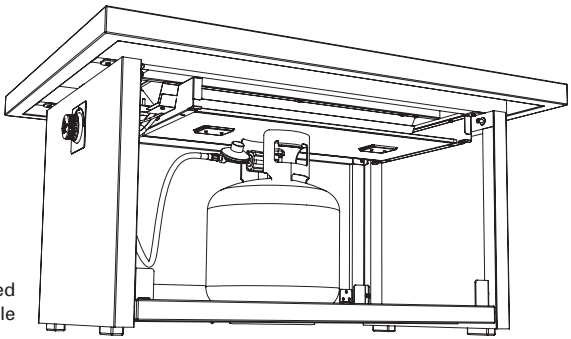

Glass Lid Shown Stowed Under Table

Glass Lid Assembly & Installation Instructions

⚠ DANGER:

Only place glass lid on top of Fire Table when the Fire Table is not in use. See Warnings section below for further detail.

⚠ WARNING:

Glass rocks may have sharp edges and glass dust may leave slivers. Always use gloves, or a tool utensil, to adjust glass rocks.

⚠ WARNING:

This is NOT a toy.

DANGER: Remove the Glass Lid PRIOR to lighting the Fire Table.

Do not place the Glass Lid, or have ANY cover, on the fire table while the fire table is in operation!

The fire table is a decorative gas appliance only. NEVER cook food on the fire table. Do not use the Glass Lid, or any other type of accessory, as a means to cook or keep food warm on the fire table.

Wait at least 30 minutes after turning off the fire table to allow it to cool down before placing Glass Lid, or ANY other cover, over the fire table.

Please ensure that all adults and children which use or are near a unit in use are aware of the hazard of high-surface temperatures present on the unit during use and should use caution and stay away to avoid burns or clothing ignition.

Children should be supervised at all times when using this unit without exception.



WARNING! HOT SURFACE!



GLASS. FRAGILE!



HANDLE WITH CARE

MAINTENANCE

Simply use warm soap water to wipe down your Glass Lid to keep it clean.

Do not use abrasive cleaners.

Fire Table accessories, replacement rocks and parts can be purchased at: **www.outlandliving.com** or by calling 888-514-1663.

The owner's manual is available as a free download from **www.outlandliving.com**. Replacement part orders can be sent by mail to the address on the cover of this booklet, or faxed to **(888) 797-9931**.

Should you have any questions or comments regarding this appliance, please do not hesitate to contact FMI Brands Inc. at **(888) 514-1663** or E-Mail to **info@outlandliving.com**.

FOR REPLACEMENT PARTS AND ACCESSORIES PLEASE VISIT
WWW.OUTLANDLIVING.COM

PART NUMBER 791

OUTLAND LIVING™

Fire Table Glass Lid

OUTLAND LIVING™

FIRE TABLE

FMI brands

FMI BRANDS INC.
107 – 19052 26 Avenue | Surrey, B.C. Canada V3Z 3V7
Toll Free 1-888-514-1663 | Fax 1-888-797-9931

D.791.000.V6