NGCK-AT #510 • AUTO IGNITION + THERMOCOUPLE • INPUT RATING: 50,000 Btu/h

OUTLAND LIVING®

FIRE TABLE
PROPANE TO NATURAL GAS APPLIANCE CONVERSION KIT

OUTDOOR LIVING PERFECTED®

APPLIANCE MODELS ACCEPTABLE TO BE USED WITH THIS KIT
NGCK-AT 510 (AUTO IGNITION + THERMOCOUPLE MODELS)

TICK	SERIES NAME	MODEL NUMBERS	SERIES NUMBERS
☐	OUTLAND FIRE TABLE	FMPPC2E-420	420

⚠ WARNING:

This conversion kit shall be installed by a qualified service agency in accordance with the manufacturer's Instructions and all applicable codes and requirements of the Authority Having Jurisdiction. If the information in these instructions is not followed exactly, a fire, explosion or production of carbon monoxide may result causing property damage, personal injury or loss of life. The qualified service agency is responsible for the proper installation of this kit. The installation is not proper and complete until the operation of the converted appliance is checked as specified in the manufacturer's instructions supplied with the kit.

FMI BRANDS INC.
101 – 3570 194 Street, Surrey, BC, Canada V3Z 1A5 | Email: info@outlandliving.com
USA, Canada Toll Free: 1-888-514-1663 | Tel: (+1) 778-294-0988
Hours of Operation: 8:30AM - 4:00PM (Pacific Time) | Customer Service in English only

® Outland Living and the Outland Flame are registered trademarks of FMI Brands Inc.

CONTENTS

1. Natural Gas Conversion Kit Manual

2. Natural Gas Valve (marked with Yellow Cap)

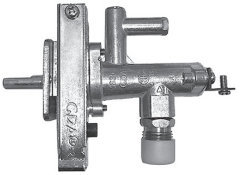

3. Heat Shrink Tubing (70mm)



4. Low Pressure Natural Gas Hose with Quick Disconnect Inlet Fitting and 5/8"-18UNF Outlet Connector; MAX. WP 1/2 PSI; 3/8" diameter, 12ft length (marked with Yellow Cap)



5. Quick Disconnect for Gas Hose with 3/8"-18 NPT Inlet Connector; MAX. WP 1/2 PSI (marked with Yellow Cap)



6. Marking and Warning Label (Side/Tag 1): Conversion Statement Label



7. Marking and Warning Label (Side/Tag 2): Conversion Identification Label

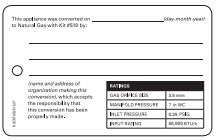

8. Marking and Warning Label - Hang Strap

OUTLAND PROPANE TO NATURAL GAS APPLIANCE CONVERSION KIT MANUAL

OUTLAND PART NUMBER: 510

Tested by CSA International

ANS Z21.97-2017/CSA 2.41-2017 Outdoor Decorative Gas Appliances

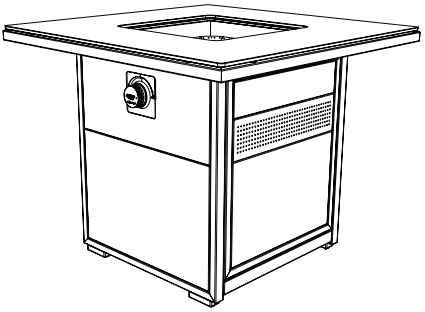

NATURAL GAS CONVERSION KIT RATINGS	
GAS ORIFICE SIZE* *Injector size marked clearly on the gas valve orifice.	3.5 mm
MANIFOLD PRESSURE	7 in WC
INLET PRESSURE	0.25 PSIG
INPUT RATING	50,000 Btu/h

NOTE: This assembly instruction manual is for OUTLAND Fire Table model **FMPPC2E-420** only.

NATURAL GAS CONVERSION KIT – CONVERSION INSTRUCTIONS

⚠ WARNING:

Your natural gas conversion kit comes with a quick-disconnect (part 5) which should be installed by a professional certified natural gas fitter. Once the quick-disconnect is properly installed, proceed to the next step.

REQUIRED TOOLS (Not Included):

- Philips Screwdriver #2 (medium)
- Adjustable Wrench
- Utility Knife
- Lighter Wand
- Soap Water Spray Bottle

⚠ CAUTION:

The gas supply shall be shut off prior to disconnecting the electrical power, before proceeding with the conversion.

STEP 1

a. Ensure the fire table gas control knob is in the OFF position.

b. Remove side panel.

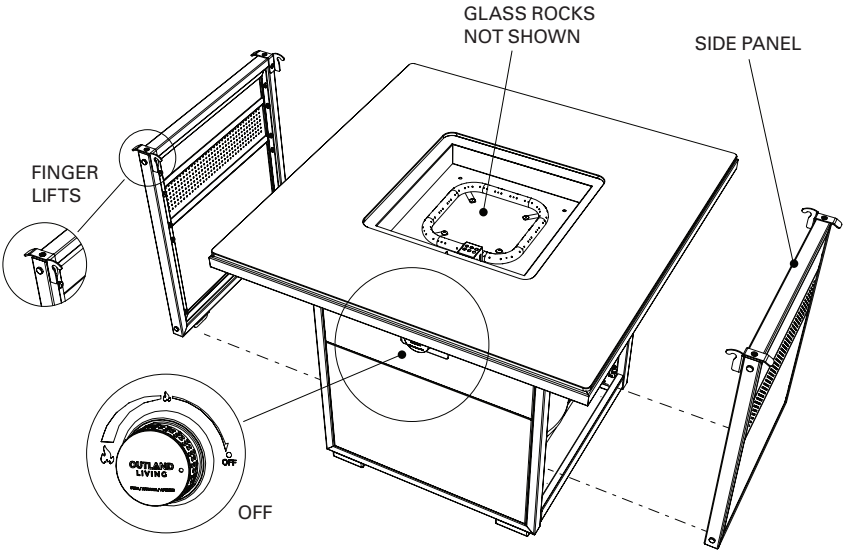

STEP 2

a. Close the valve on the LP (propane) cylinder.

b. Disconnect and remove the LP cylinder from the fire table.

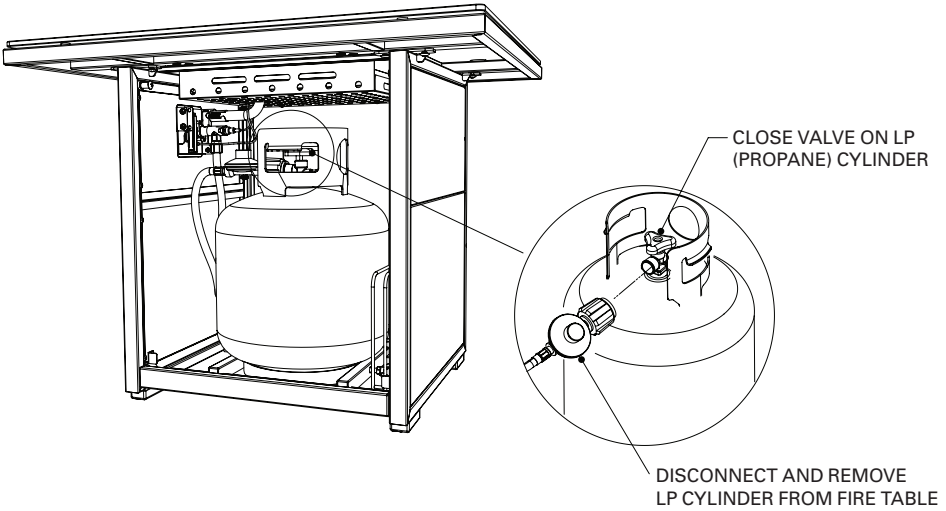

STEP 3

a. Disconnect the igniter cable. Slide protective cap back to expose the cable connection. Grasp the cable at the base and pull firmly.

b. Disconnect the thermocouple cable. Grasp the cable at the base and pull firmly.

c. Disconnect the thermocouple ground wire. Remove the screw to release the wire.

d. Locate the black OUTLAND heat shrink tubing on the gas hose coupling and ****carefully**** remove it using a utility knife.

e. Remove the propane hose. Uncouple it from the gas appliance valve assembly using a wrench (not provided).

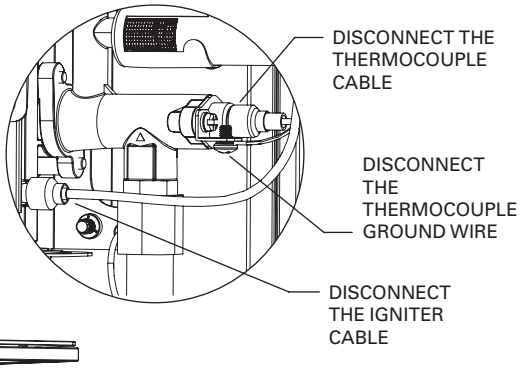

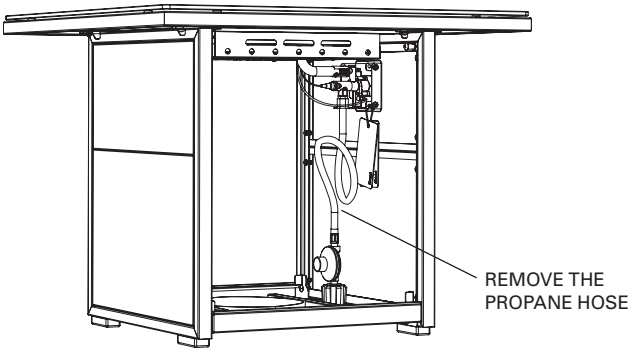

STEP 4

Remove the (4x) screws holding the gas valve mounting bracket in place. Remove the gas valve mounting bracket assembly.

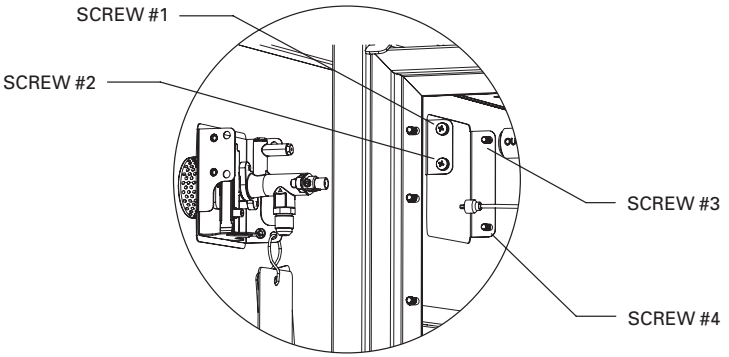

STEP 5

Disassemble the propane gas valve.

Remove the gas control knob by gripping firmly and pulling straight out. Remove the two screws located next to the exposed valve stem. This will release the base ring, faceplate, and the propane gas valve, which you can set aside. Label and save this propane valve for converting back to propane if required.

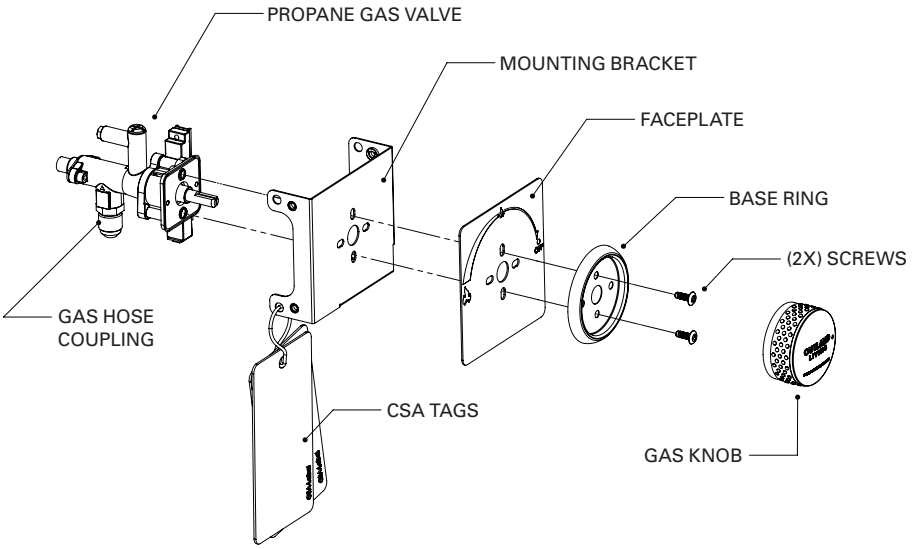

STEP 6

Assemble the natural gas valve (part 2).

a. Take the new NATURAL GAS valve (marked with Yellow Cap) and insert the stem through the mounting bracket, faceplate, and gas knob base ring ensuring the coupling is facing down.

b. Align the openings of the gas valve, mounting bracket, faceplate, and gas knob base ring and insert the two screws.

c. Attach the gas knob by aligning the flat side keyway to the flat side of the gas valve stem and firmly press-fitting.

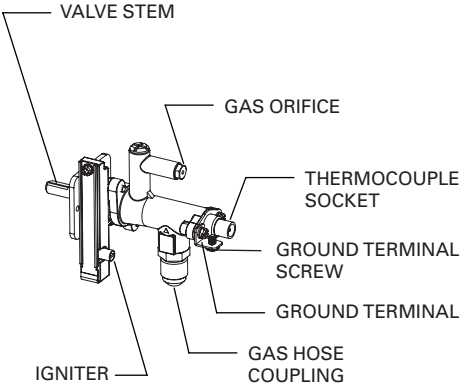

STEP 6 (continued)

Assemble the natural gas valve (part 2).

Note: *Ensure the arrow on the knob aligns with the OFF indicator on the valve cover when the valve is set in the closed position. To check, push and turn the knob clockwise until it stops. The arrow on the knob should be aligned with the OFF indicator on the valve cover at this point.*

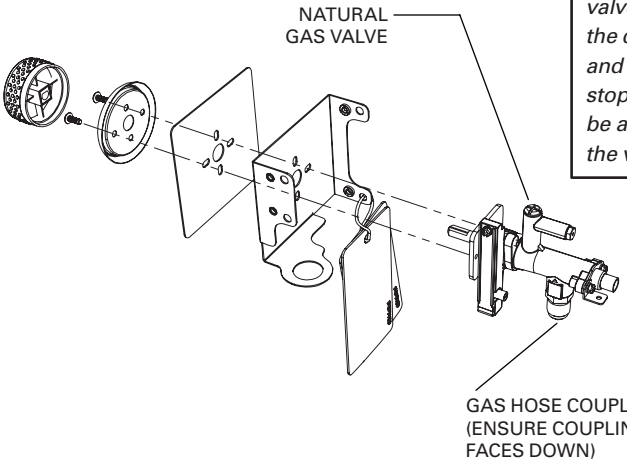

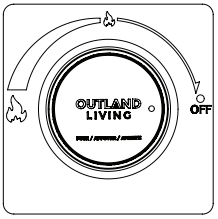

OFF

STEP 7

Slide the heat shrink tubing (part 3) over the burner venturi tube.

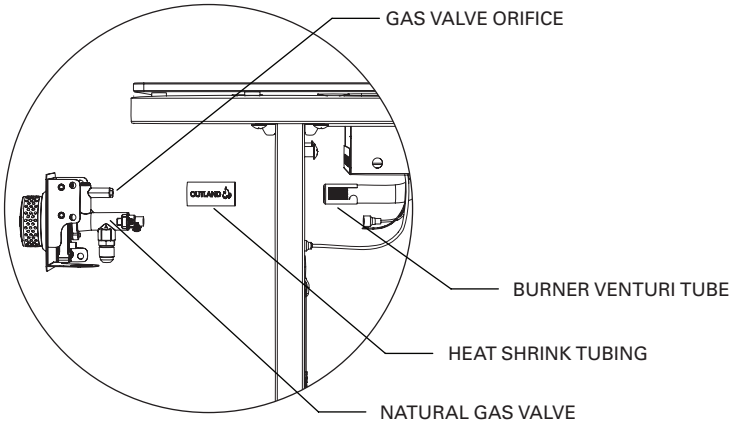

STEP 8

Mount the new natural gas bracket assembly.

Use the same 4x screws which held the propane gas valve assembly.

Important: Ensure the gas valve orifice is aligned to sit inside the burner venturi tube.

STEP 9

Apply the heat shrink tubing (part 3).

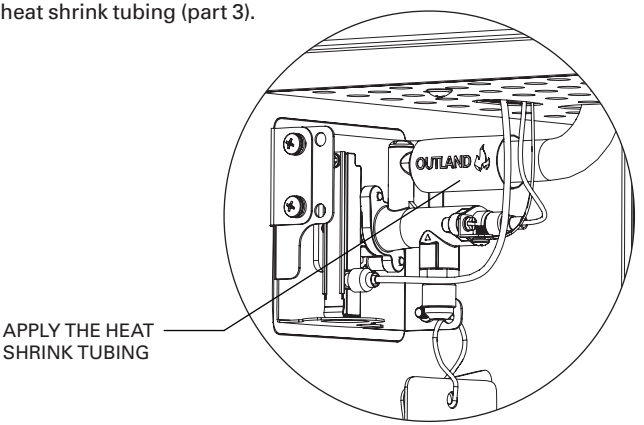

Position the heat shrink tubing so that it generously overlaps the connection where the gas valve orifice enters the burner venturi tube and extends past the air inlet holes in the burner tube.
***** For the best looking decorative flame quality it is important to ensure all the air gaps and air inlet holes are completely covered.*****



Use a lighter wand, or lit match, to apply flame heat close to and directly underneath and around the heat shrink tubing. Don't burn a single spot too long. Have a steady hand and use a slow back and forth motion with the flame. Ensure the heat shrink tubing cinches snugly over the entire circumference and no visible gaps in the ends remain. The heat shrink tubing must set firmly around the parts, forming a good seal, so no air gets in.

TIP: Once you have positioned the heat shrink tubing in place, you do not need to hold on to it during the heat application. The flame will naturally shrink and contract the heat shrink tubing, conforming to the parts underneath and sealing off the air holes.

Oh Darn it!
If, for some reason, after applying the heat shrink tubing, there are visible gaps or exposed air holes around the venturi connection area, we suggest you use common high heat electrical tape to close those gaps.

STEP 10

Attach the natural gas hose (part 4).

If the natural gas hose is not preassembled to the natural gas valve, remove the yellow cap and attach the natural gas hose to the gas valve coupling. Use a wrench to firmly tighten.

⚠ WARNING:

Pay attention not to cross thread the coupling during tightening. Do not over tighten. (Max torque: 33.9 N/M)

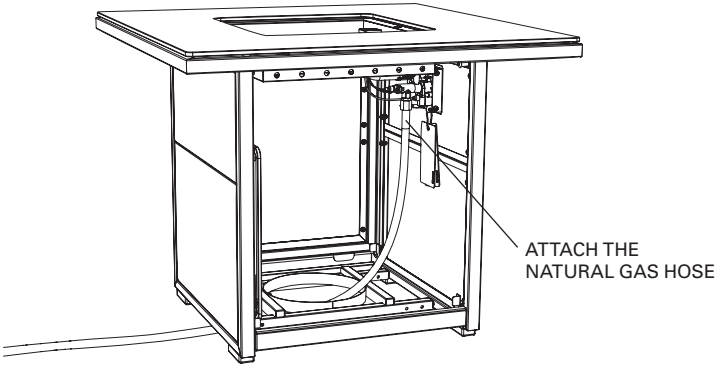

STEP 11

a. Connect the igniter cable to the gas valve.

b. Connect the round thermocouple cable to the thermocouple socket.

c. Attach the thermocouple ground wire connection to the gas valve ground terminal. Use the screw provided on the gas valve. Ensure the connection is firmly set under the screw.

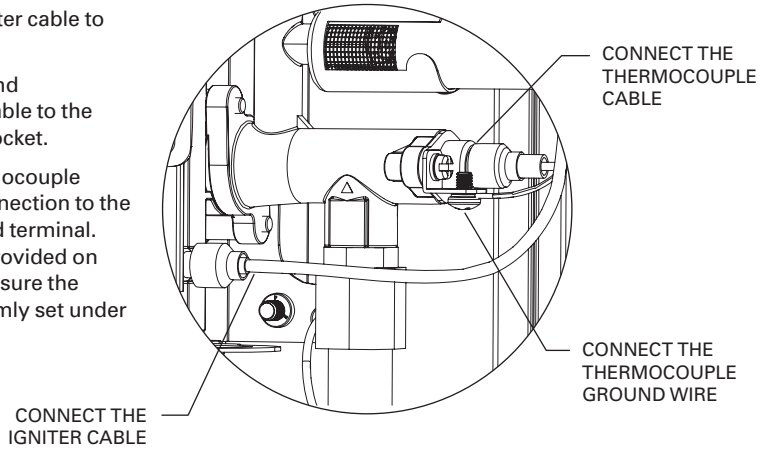

STEP 12

Test the Igniter to verify the correct installation and ensure proper spark. Locate the igniter and the thermocouple inside the burner tray (under protective shield). Ensure igniter cover is not covered by glass rocks. This helps air circulate.

Turn the gas knob until it clicks. A small spark ignition should be visible at the tip of the igniter. If the spark is not working clean dust from igniter tip and thermocouple post. Try again. If still not working you have not installed the igniter cable correctly. Reattach the igniter cable. Retest. Repeat process until you verify the spark works.

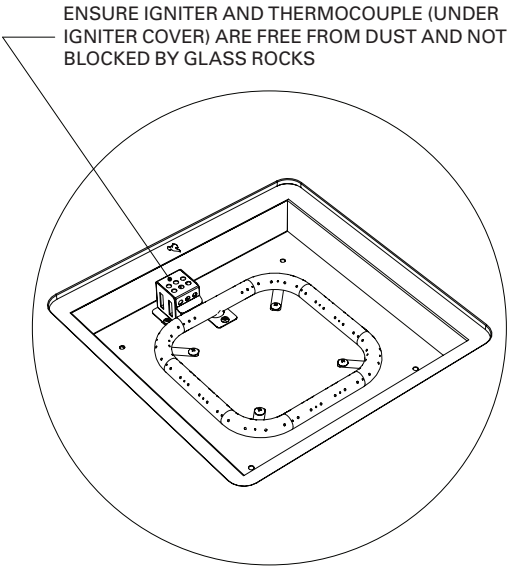

STEP 13

Install the supplied Quick-Disconnect (part 5). The quick-disconnect should be installed by a professional certified natural gas fitter. Once the quick-disconnect is properly installed, proceed to the next step.

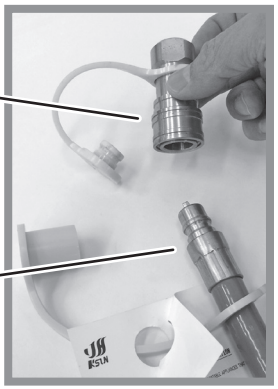

STEP 14

Confirm that the control knob on the fire table is in the OFF position.

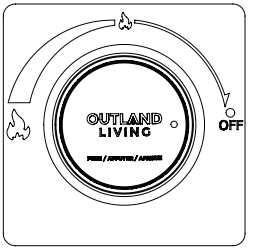

OFF

STEP 15

Confirm that the valve on your natural gas box gas supply is closed OFF.

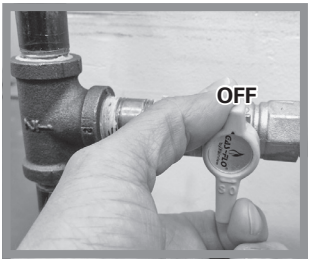

STEP 16

Attach the gas hose to your installed quick-disconnect natural gas source (house line).

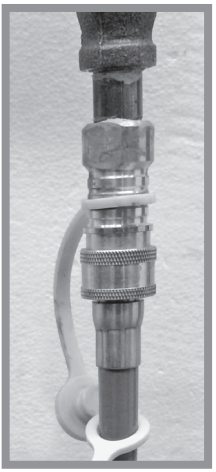

STEP 17

Turn on the gas flow from your source valve.

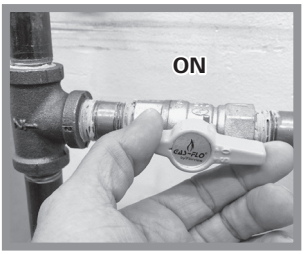

STEP 18

LEAK TEST:

Mix a solution of liquid soap and water in a spray bottle and perform a leak test on all fittings prior to use.

Spray the solution on all critical hose junctions and inspect for bubbles forming around any of the connections.

a. Quick-disconnect coupling connection at gas supply.
b. Gas hose coupling connection at fire table gas valve.

If growing bubbles appear it indicates that there is a gas leak. If a leak is detected immediately shut off the gas at the source. Retighten all connections and try again. If the leak persists do not attempt repairs. Call a professional certified gas fitter for assistance. Call OUTLAND for replacement parts.



QUICK-DISCONNECT COUPLING CONNECTION AT GAS SUPPLY



GAS HOSE COUPLING CONNECTION AT FIRE TABLE GAS VALVE

STEP 19

ONCE YOU HAVE CONFIRMED THERE ARE NO GAS LEAKS (see 'Leak Test' section above), VERIFY THE RELATIONSHIP OF IGNITER TO BURNER, PRIOR TO COMPLETING CONVERSION:

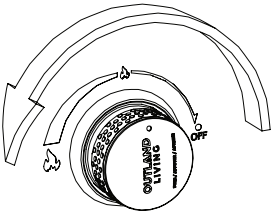

PUSH THE KNOB IN AND QUICKLY TURN TO THE 12:00 POSITION. HOLD FOR 10 SECONDS. RELEASE.

a. Reference the appliance Owner's Manual for ignition sequence.

b. Test the ignition to verify the correct installation: Push the knob in and quickly turn to the 12:00 position. Do not release the gas knob. The ignitor will spark and ignite the gas.

   ****IMPORTANT: You must hold the knob in for 10 seconds to heat up the thermocouple.****
   If the thermocouple is not given time to heat up, the thermocouple will shut off the gas supply and the flame will go out. After 10 seconds, once the thermocouple is heated, release the knob and the fire table should stay lit.



c. Verify the flame. Upon igniting the appliance, visually verify that the burner is indeed burning as demonstrated in the image here. The presence of flames will confirm that the burner is burning. To test the adjustment of the gas input rate (flame height and intensity), turn the gas knob left or right. Adjust rocks with poker to reveal flame.
   Refer to your Owner's Manual for further details.

STEP 20

If after lighting attempts there are no flames present, as demonstrated in the image here, the appliance is likely not burning. If this is the case, IMMEDIATELY turn the gas knob to the 'OFF' position, if it is not already, and repeat the ignition procedure.



Repeat the push-in and turn to high flame motion 2-3 times consecutively until the burner ignites. Remember to keep holding in the gas knob for at least 10 seconds once you see a visible ignition. **If the thermocouple is not given time to heat up, or the ground wire connection is loose, the thermocouple will shut off the gas supply and the flame will go out.**

*For more information about the thermocouple please see section "**What is a Thermocouple?**".*

STEP 20 (continued)

The appliance should light within the first three tries. Never let the gas knob flow open for more than 5 seconds without lighting. If the gas does not ignite within 5 seconds turn off the valve, wait 5 minutes for the gas to dissipate. Check gas supply is open. Check connections. If your appliance has an electric igniter clean and clear igniter of any debris and dust. Ensure igniter cover is not covered by glass rocks (see photo). This helps air circulate. Repeat ignition procedure.

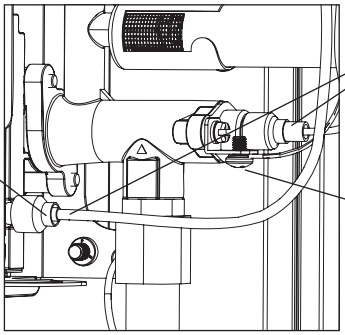

FIRE TABLE WON'T LIGHT? IGNITION PROBLEM?

If your fire table still fails to ignite, turn the knob to the 'OFF' position. Reference the appliance Owner's Manual for ignition troubleshooting, and/or call Customer Service at 1-888-514-1663.

What is a Thermocouple?

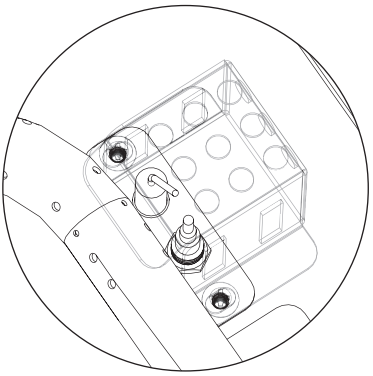

A thermocouple is a temperature sensitive safety feature mounted underneath the igniter cover and connected to the gas valve. The thermocouple is designed to shut off the gas supply to prevent un-burnt gas from free-flowing through the burner if the table top flames go out unexpectedly.

TIPS:

- During ignition, the thermocouple needs to heat up for at least 10 seconds for the fire table to work properly.
- The thermocouple requires a ground wire connection to the gas valve to complete the electrical circuit. If the ground connection is loose, the gas will not flow, or will intermittently shut off.
- Ensure that the round thermocouple cable is firmly plugged into the gas valve socket. The thermocouple will automatically shut off the gas if the cable is not connected properly.

STEP 21

AFFIX MARKING AND WARNING LABEL AFTER CONVERSION, TESTING AND VERIFICATION SEQUENCES ABOVE ARE COMPLETE AND PRIOR TO FIRST USE. The marking and warning label has two sides, containing specific TAG 1 and TAG 2 content, and requires specific action as instructed below to be in strict compliance with CSA guidelines.

ATTENTION: Check first that the appliance is not hot before handling and affixing tag.

INSTRUCTION:

a. **TAG 1:** IN STRICT COMPLIANCE WITH CSA GUIDELINES THE RESPONSIBLE PARTY SHALL MARK THE TICK BOX NEXT TO APPLICABLE MODEL.

b. **TAG 2:** IN STRICT COMPLIANCE WITH CSA GUIDELINES THE RESPONSIBLE PARTY SHALL MARK THE DATE OF CONVERSION AND THEIR IDENTITY WITH PERMANENT MARKING.

MARKING & WARNING LABELS (English and French):

TAG 1, SIDE 1 • ÉTIQUETTE 1 / CÔTÉ 1

THIS PRODUCT HAS BEEN CONVERTED FROM PROPANE TO NATURAL GAS. INSTRUCTION (TO BE FOLLOWED IN STRICT COMPLIANCE WITH CSA GUIDELINES): THE RESPONSIBLE PARTY SHALL MARK THE TICK BOX NEXT TO APPLICABLE MODEL, THE DATE OF CONVERSION, IDENTITY AND AFFIX LABEL IN CLOSEST PROXIMITY TO EXISTING PRODUCT RATING PLATE, IN A CONSPICUOUS LOCATION, ON THE APPLIANCE.
OUTLAND NATURAL GAS CONVERSION KIT • NGCK-AT PART # 510

APPLIANCE MODELS ACCEPTABLE TO BE USED WITH THIS KIT NGCK-AT (AUTO IGNITION + THERMOCOUPLE MODELS)			
TICK	SERIES NAME	MODEL #	SERIES #
☐	OUTLAND FIRE TABLE	FMPPC2E-420	420

OUTLAND NATURAL GAS CONVERSION KIT
Distributed by: FMI BRANDS INC
101 – 3570 194 Street, Surrey, BC
Canada V3Z 1A5 • 1.888.514.1663

NGCK-TAG1-510_V1

TAG 2, SIDE 1 • ÉTIQUETTE 2 / CÔTÉ 1

This appliance was converted on _____ *(day-month-year)*
to Natural Gas with Kit #510 by:

_____

_____

_____

(name and address of organization making this conversion), which accepts the responsibility that this conversion has been properly made.

RATINGS	
GAS ORIFICE SIZE	3.5 mm
MANIFOLD PRESSURE	7 in WC
INLET PRESSURE	0.25 PSIG
INPUT RATING	50,000 BTU/h

NGCK-TAG2-510_V1

2.5 in x 4 in (63.5 mm x 101.6 mm)

CE PRODUIT A ÉTÉ CONVERTI DU PROPANE AU GAZ NATUREL.

DIRECTIVES (À SUIVRE POUR ÊTRE EN PARFAITE CONFORMITÉ AVEC LES DIRECTIVES DE LA CSA) : LA PERSONNE RESPONSABLE DOIT COCHER LA CASE À CÔTÉ DU MODÈLE CONCERNÉ, INDIQUER LA DATE DE CONVERSION AINSI QUE SON IDENTITÉ ET POSER L'ÉTIQUETTE LE PLUS PRÈS POSSIBLE DE LA PLAQUE SIGNALÉTIQUE EXISTANTE DU PRODUIT, À UN ENDROIT BIEN VISIBLE, SUR L'APPAREIL.
ENSEMBLE DE CONVERSION AU GAZ NATUREL OUTLAND - NGCK-AT N° RÉF. 510

MODÈLES D'APPAREILS POUVANT ÊTRE UTILISÉS AVEC CET ENSEMBLE NGCK-AT (MODÈLES À ALLUMAGE AUTOMATIQUE + THERMOCOUPLE)			
COCHER	NOM DE SÉRIE	NUMÉROS DE MODÈLE	NUMÉROS DE SÉRIE
☐	TABLE DE FEU OUTLAND	FMPPC2E-420	420

ENSEMBLE DE CONVERSION AU GAZ NATUREL OUTLAND
Distribué par : FMI BRANDS INC
101 – 3570 Rue 194, Surrey (C.-B.)
Canada V3Z 1A5 • 1.888.514.1663

TAG 1, SIDE 2 • ÉTIQUETTE 1 / CÔTÉ 2

Cet appareil a été converti le _____ *(jour-mois-année)*
au gaz naturel avec l'ensemble n° 510 par

_____

_____

_____

(nom et adresse de l'organisme faisant cette conversion), qui assume la responsabilité d'avoir fait correctement cette conversion.

CARACTÉRISTIQUES NOMINALES	
TAILLE D'ORIFICE D'ARRIVÉE DE GAZ	3,5 mm
PRESSION D'ADMISSION	7 po CE
PRESSION D'ENTRÉE	0,25 lb/po² [manométrique]
DÉBIT CALORIFIQUE	50 000 BTU/h

TAG 2, SIDE 2 • ÉTIQUETTE 2 / CÔTÉ 2

STEP 21 (continued)

IN STRICT COMPLIANCE WITH CSA GUIDELINES, THE RESPONSIBLE PARTY SHALL AFFIX THE MARKING & WARNING LABEL IN CLOSEST PROXIMITY TO EXISTING PRODUCT RATING PLATE, IN A CONSPICUOUS LOCATION, ON THE APPLIANCE BEING CONVERTED:

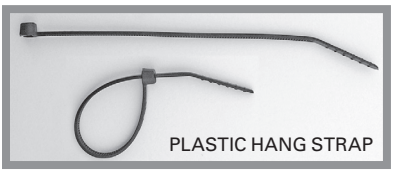

After Steps A and B above are complete, affix the label on the appliance, using the supplied hang strap, in the location as shown on the applicable model appliance picture below.

MODEL	HANG TAG LOCATION
FMPPC2E-420	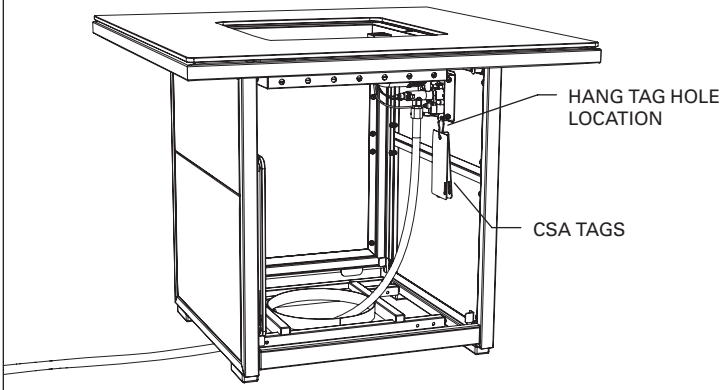

STEP 22

Your Outland Fire Table is now converted to Natural Gas.
Follow normal igniting procedures as per your Owner's Manual.

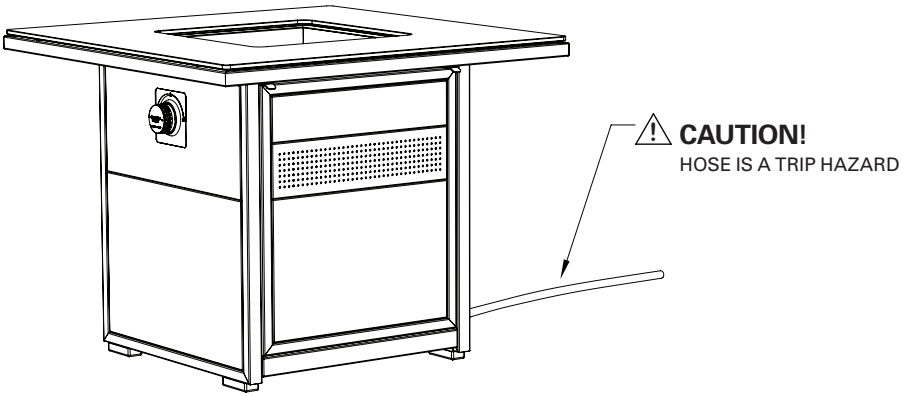

OUTLAND LIVING | Natural Gas Conversion Kit

⚠ WARNING:

This is NOT a toy.

CAUTION! Hose is a trip hazard!

The fire table is a decorative gas appliance only. NEVER cook food on the fire table.

Wait at least 30 minutes after turning off the fire table to allow it to cool down before putting ANY cover over the fire table.

Please ensure that all adults and children which use or are near a unit in use are aware of the hazard of high-surface temperatures present on the unit during use and should use caution and stay away to avoid burns or clothing ignition.

Children should be supervised at all times when using this unit without exception.



WARNING! HOT SURFACE!



GLASS. FRAGILE!

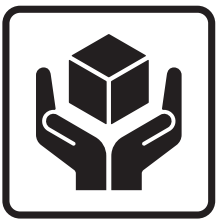

HANDLE WITH CARE

Fire Table accessories, replacement rocks and parts can be purchased at: **www.outlandliving.com** or by calling **1-888-514-1663**.

The Owner's Manual is available as a free download from **www.outlandliving.com**. Replacement part orders can be sent by mail to the address on the cover of this booklet.

Should you have any questions or comments regarding this appliance, please do not hesitate to contact FMI Brands Inc. at **1-(888) 514-1663** or e-mail to **info@outlandliving.com**.

FOR REPLACEMENT PARTS AND ACCESSORIES PLEASE VISIT
WWW.OUTLANDLIVING.COM