OUTLAND LIVING™

FIRE TABLE

Owner's Manual



Wicker colour may be different than shown.

LP Cylinder not included.

IDA DESIGN AWARDS SILVER WINNER 2016

Model number FMPPC2E-403

© 2017 FMI Brands Inc.
Patent US D848,591

D.403.000.V4

FMI BRANDS INC.
107 – 19052 26 Avenue | Surrey, B.C. Canada V3Z 3V7 | Toll Free 1-888-514-1663 | Fax 1-888-797-9931

Outland Living is a registered trademark of FMI Brands Inc. The OUTLAND Flame mark is a registered trademark of FMI Brands Inc.

Owner & Safety Manual

OUTLAND LIVING™ FIRE TABLE

Model number FMPPC2E-403 - Tested by CSA International
ANS Z21.97-2017/CSA 2.41-2017 Outdoor Decorative Gas Appliances

⚠ DANGER:

If you smell gas:

1 Shut off gas to the appliance.
2 Extinguish any open flame.
3 If odour continues, leave the area immediately.
4 After leaving the area, call your gas supplier or fire department.

Failure to follow these instructions could result in fire or explosion, which could cause property damage, personal injury, or death.

⚠ WARNING:

Do not store or use gasoline or other flammable vapors and liquids in the vicinity of this or any other appliance.

An LP-cylinder not connected for use shall not be stored in the vicinity of this or any other appliance.

⚠ WARNING: For outdoor use only.

Installation and service must be performed by a qualified installer, service agency, or the gas supplier.

⚠ DANGER



CARBON MONOXIDE HAZARD

This appliance can produce carbon monoxide which has no odour.

Using it in an enclosed space can kill you.

Never use this appliance in an enclosed space such as a camper, tent, car, or home.



WARNING! HOT SURFACE!



GLASS. FRAGILE!



HANDLE WITH CARE



HEAVY OBJECT.
TWO PERSON LIFT REQUIRED.

DESIGN CERTIFIED®

CERTIFIED®

C SA US

⚠ WARNING:

Improper installation, adjustment, alteration, service or maintenance can cause injury or property damage. Read the installation, operating and maintenance instructions thoroughly before installing or servicing this equipment.

⚠ WARNING:

If the information in this manual is not followed exactly, a fire or explosion may result causing property damage, personal injury or loss of life.

INSTALLER: Leave this manual with the appliance.
CONSUMER: Retain this manual for future reference.

LP SAFETY:

a. Do not store a spare LP-gas cylinder under or near this appliance.
b. Never fill the cylinder beyond 80 percent full.
c. If the information in "(a)" and "(b)" is not followed exactly, a fire causing death or serious injury may occur.

Do not use this appliance under overhead combustible surfaces.

MINIMUM CLEARANCES:

- **Bottom:** Non-Combustible Surface
- **Top:** 80 inches
- **Sides:** 36 inches
- For Installation on (or over) non-combustible floors only

Input: 50,000 Btu/h (14.65 kW) and manifold pressure: 11 in wc (2.74 kPa)
Min. gas supply for input adj. 11 in wc (2.74 kPa)
Max. gas supply: 11 in wc (2.74 kPa)
Injector Size* 2.16 mm
* Injector size marked clearly on the gas valve orifice.
Type of Gas: Propane (LP)

This appliance shall be used only outdoors in a well-ventilated space and shall not be used in a building, garage or any other enclosed area.

The gas supply must be turned off at the LP-gas supply cylinder when this appliance is not in use.

Indoor storage of this appliance is permissible only if the cylinder is disconnected and removed from the appliance.

Cylinders must be stored outdoors in a well-ventilated area out of the reach of children.

Disconnected cylinders must have threaded valve plugs tightly installed and must not be stored in a building, garage or any other enclosed area.

The gas pressure regulator provided with this appliance must be used, and must be the same model as supplied with the unit.

The cylinder supply system must be arranged for vapor withdrawal.

Cylinders used with this unit must have a collar to protect the cylinder valve.

An approved LP-Cylinder stabilizer, such as the stabilizer ring included, must be used when the appliance is in use.

Replacement parts and a list of such parts are available from FMI Brands Inc. through the contact information provided on the last page of this Manual.

⚠ WARNING:

Please ensure that all adults and children which use or are near a unit in use are aware of the hazard of high-surface temperatures present on the unit during use and should use caution and stay away to avoid burns or clothing ignition.

Carefully supervise young children in the area of this appliance. Clothing or other flammable materials should not be hung from the appliance or placed on or near the appliance. Any guard or other protective device removed for servicing the appliance must be replaced prior to operating the appliance.

Installation and repair should be done by a qualified service person. The appliance should be inspected before use and at least annually by a qualified service person. More frequent cleaning may be required as necessary. It is imperative that control compartment, burners and circulating air passageways of the appliance be kept clean.

LP CYLINDER:

All LP cylinders to be used with this appliance must be:

a. Constructed and marked in accordance with the specifications for LP-gas cylinders Standard, *CAN/CSA B339, Cylinders, Spheres and Tubes for the Transportation of Dangerous Goods.*

b. Provided with a listed overfilling prevention device.

c. Provided with a cylinder connection device compatible with the connection for outdoor cooking appliances.

d. Only a 20 lb. (9 kg) LP gas cylinder is to be used for this appliance, approximately 18" (46 cm) high & 12" (30 cm) diameter.

e. The use of an approved LP gas cylinder stabilizer, such as the one included, must be used when using this appliance in order to prevent the LP gas cylinder from tipping over.

ENCLOSURES FOR SELF-CONTAINED LP GAS SYSTEMS:

An enclosure for an LP-gas cylinder shall be ventilated by openings at both the upper and lower levels of the enclosure. This shall be accompanied by one of the following:

a. One side of the enclosure shall be completely open; or

b. For an enclosure having four sides, a top, and a bottom:

At least two ventilation openings (see Part IV, Definitions) shall be provided in the sidewalls of the enclosure, located within 5 in (217 mm) of the top of the enclosure, equally sized, spaced at a minimum of 90 degrees (1.57 rad), and unobstructed. The opening(s) shall have a total free area of not less than 1 in^2 per lb (14.2 cm^2 per kg) of stored fuel capacity.

Ventilation opening(s) shall be provided at floor level of the enclosure and shall have total free area of not less than 1/2 in^2 per lb (7.1 cm^2 per kg) of stored fuel capacity. If ventilation openings at floor level area are in the side wall, there shall be at least two openings. The bottom of the openings shall be 1 in (25.4 mm) or less from the floor level and the upper edge no more than 5 in (127 mm) above the floor level. The openings shall be equally sized, spaced at a minimum of 90 degrees (1.57 rad), and unobstructed.

Every opening shall have minimum dimensions so as to permit the entrance of a 1/8 in (3.2 mm) diameter rod. Ventilation openings in sidewalls shall not communicate directly with other enclosures of the appliance.

CONNECTION:

1. Be sure the cylinder valve and appliance valves are "off".
2. Place full LP gas cylinder on tank stabilizer ring. Secure the base of the LP gas cylinder by hand tightening the wing-nut collar.
3. Center the nipple in the cylinder valve and hold in place.
4. Using the other hand, turn the hand wheel clockwise until there is a positive stop. Do not use tools.
5. **Hand tighten only. When making the connection, hold the regulator in a straight line with the cylinder valve, so as not to cross thread the connection.**
6. Leak test the connection.

LEAK TEST:

1. DO NOT USE OR PERMIT SOURCES OF IGNITION IN THE AREA WHILE DOING THE LEAK TEST.
   THIS INCLUDES SMOKING.
2. Leak testing should be done once per year or whenever the LP gas cylinder or any other gas system part is taken apart, serviced or replaced, whichever is more frequent.
3. Ensure all gas system coupling joints are tight and properly attached.
4. Prepare a leak testing solution of half liquid detergent and half water.
5. Apply the solution to the LP gas delivery system at points as shown in illustration indicated on page 4.
6. The leak(s) must be stopped by tightening the loose joints, if possible, or by replacing the faulty parts(s) with the part(s) recommended by the appliance manufacturer.

Should you have any questions or comments regarding this appliance, please do not hesitate to contact FMI Brands Inc. at (888) 514-1663 or E-Mail to info@outlandliving.com

THE APPLIANCE IS NOT TO BE USED UNTIL ANY LEAK IS CORRECTED.

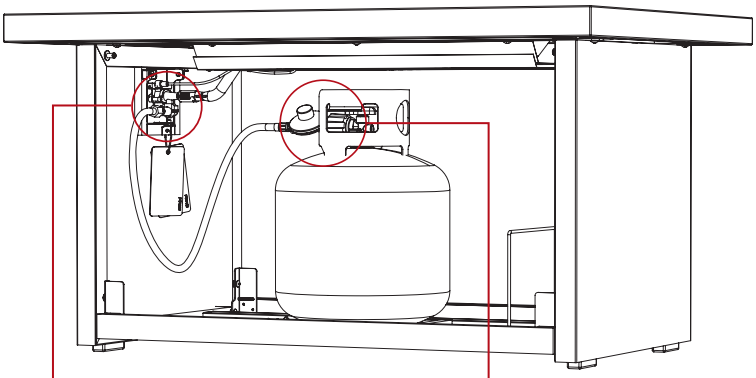

LEAK TEST: Apply the solution to the LP gas delivery system at points:
1. Fire Table Valve Coupling
2. Gas Hose Regulator
3. Cylinder Valve Coupling

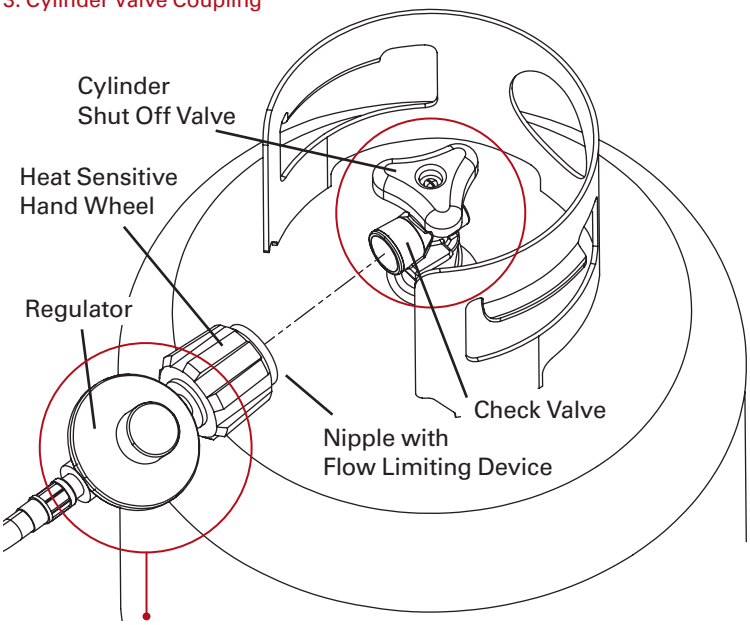

LEAK TEST: Apply the solution to the LP gas delivery system at points. Fire Table valve coupling; gas hose regulator & cylinder coupling.

⚠ WARNING:

If the information in this manual is not followed exactly, a fire or explosion may result causing property damage, personal injury or loss of life. Installation and service must be performed by a qualified installer, service agency or the gas supplier.

A gas appliance repairman or LP gas dealer should be called if attempts to stop the leak(s) are unsuccessful and, in such case, the LP gas supply must be shut off at the cylinder valve or the cylinder must be removed from the appliance until the leak(s) is corrected.

Inspect hose prior to each use of the unit. The hose assembly must be replaced prior to the appliance being put into operation if there is evidence of excessive abrasion or wear, or if the hose is damaged. Contact FMI Brands Inc. should you require a replacement hose.

Inspect burner prior to each use. Burner must be replaced prior to the appliance being put into operation if there is evidence of damage. Replacement burners are available from FMI Brands Inc.

Should any part of this appliance (including the burner) become soiled or dirty, wipe lightly with a damp cloth. Do not use flammable or corrosive cleaning products on or near this unit.

Ensure that gas hose is placed in an area where it is unlikely to be tripped over (such as pathways or trails) or subject to other accidental damage.

Keep the appliance area clear and free from combustible materials, gasoline and other flammable vapors and liquids.

Solid fuels shall not be burned in this appliance.

Installation must conform with local codes or, in the absence of local codes, with either the *National Fuel Gas Code, ANSI Z223.1/ NFPA 54, Natural Gas and Propane Installation Code, CSA B149.1 or Propane Storage and Handling Code, B149.2, or the Standard for Recreational Vehicles, ANSI A 119.2/NFPA 1192, and CSA Z240 RV Series, Recreational Vehicle Code,* as applicable.

Supplied parts & hardware list:

PART #	DESCRIPTION	QUANTITY	PICTURE
1	Assembly Work Surface (Top Foam Packing Insert)	1	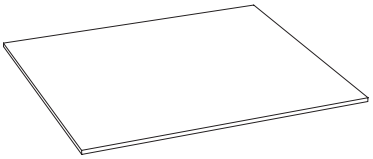
2	Table Top Frame with Tempered Glass	1	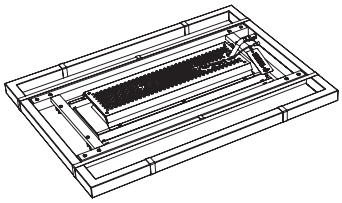
3	End Panel with Gas Valve, Gas Hose and Regulator Mounting Bracket Assembly	1	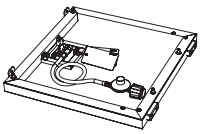
4	End Panel	1	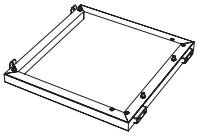
5	Cross Bar	2	
6	Propane Cylinder H-Frame Support	1	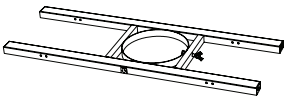
7	Side Panel	2	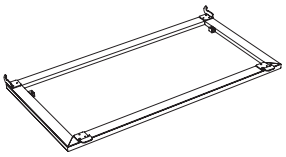
8	M6 screw (+ 1 extra)	16	
9	Compartment Divider	1	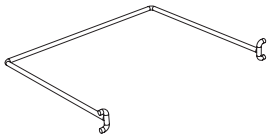
10	(1 Bag) Glass Fire Rocks	1	

Required Tools (Not Supplied):

Cross (Philips) Screwdriver (PH3)

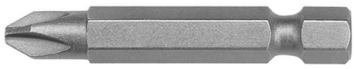

Scissors

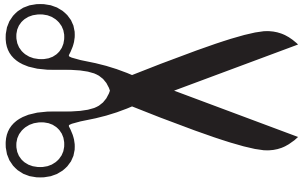

SECTION 1: ASSEMBLY

ATTENTION: For customers who have ordered the Glass Lid accessory:

If you are waiting for your Glass Lid accessory to arrive, we recommend that you hold off on assembling your new Outland Firetable.

The Glass Lid accessory comes with mounting brackets that are installed to the underside of the Outland Firetable for Glass Lid storage. Installing the Glass Lid mounting brackets to your Outland Firetable takes a bit more time and effort when your Outland Firetable is fully assembled.

We understand that you may be excited to use your Outland Firetable for the first time! If you prefer not to wait for your Glass Lid accessory to arrive, feel free to begin the assembly of your Outland Firetable.

WARNING:

DO NOT CUT STRAPS WITH TABLE TOP STANDING UP.

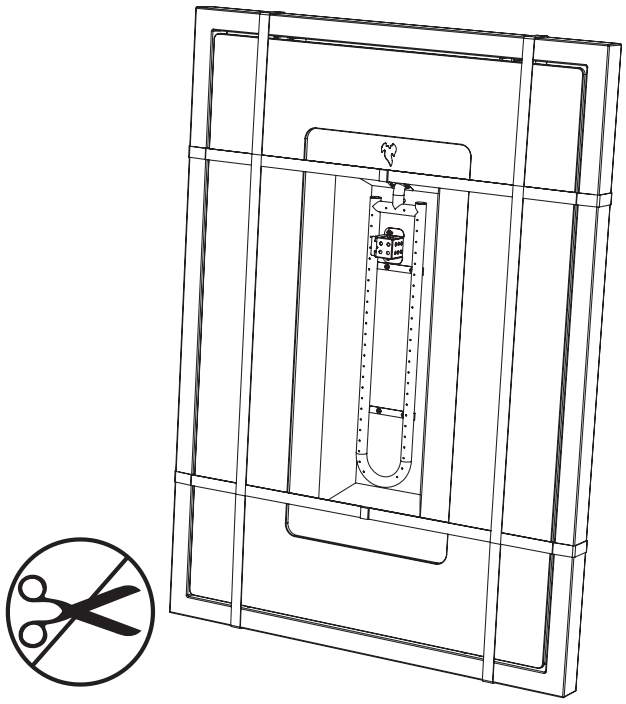

STEP 1

*** Resist the urge to cut straps until STEP 6 ***

Lay the table top frame with tempered glass on a flat non-marking surface. Use cardboard or foam provided in packing box as a work surface.

EXTREME CAUTION! The fire table top tempered safety glass may explode if contact is made with uneven ground, especially ceramic tile! Always place a flat cardboard, foam or blanket work surface underneath when assembling the fire table, especially on ceramic tile.

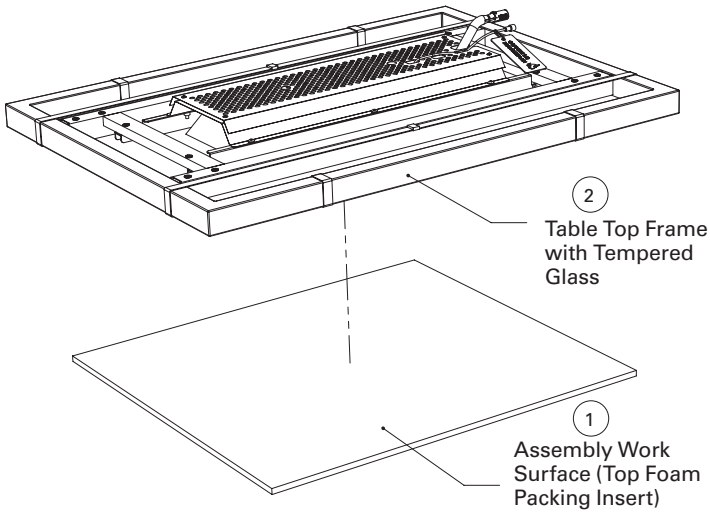

SECTION 1: ASSEMBLY (continued)

STEP 2A

Loosely install the End panel with gas valve, gas hose and regulator mounting bracket assembly to the table top with 4 screws, but do not tighten.

IMPORTANT: Align gas valve orifice inside burner tube.

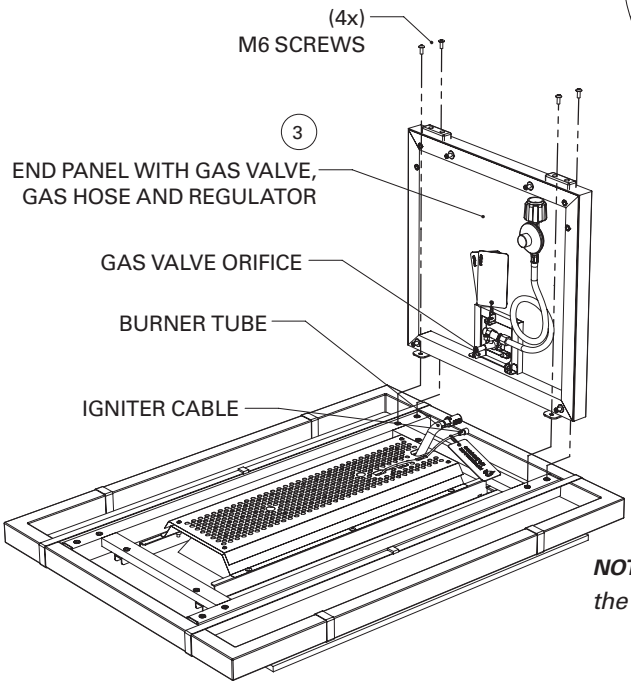

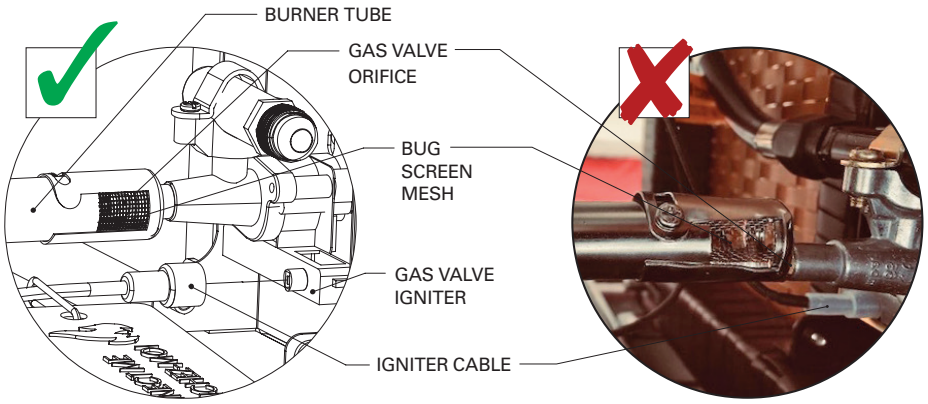

⚠ ATTENTION:

The brass gas valve orifice should be inside the burner tube and visible through the bug screen mesh. If your orifice and burner tube does not line up like in the image above, please call customer service at (888) 514-1663 or E-Mail to info@outlandliving.com.

NOTE: *To simplify the assembly drawings the gas hose with regulator is not shown.*

STEP 2B

IMPORTANT: Connect the igniter cable to the gas valve igniter.

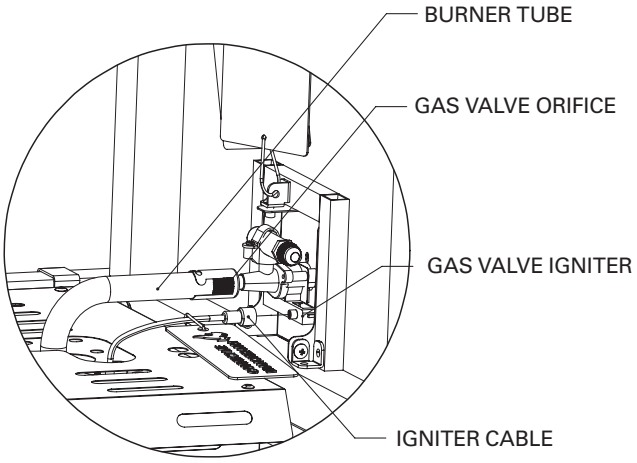

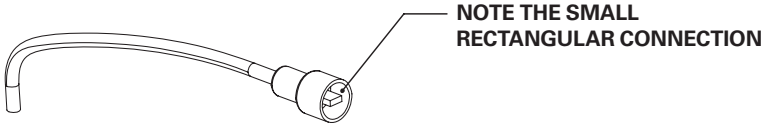

SECTION 1: ASSEMBLY (continued)

STEP 3

Mount End Panel ***loosely***, but do not tighten.

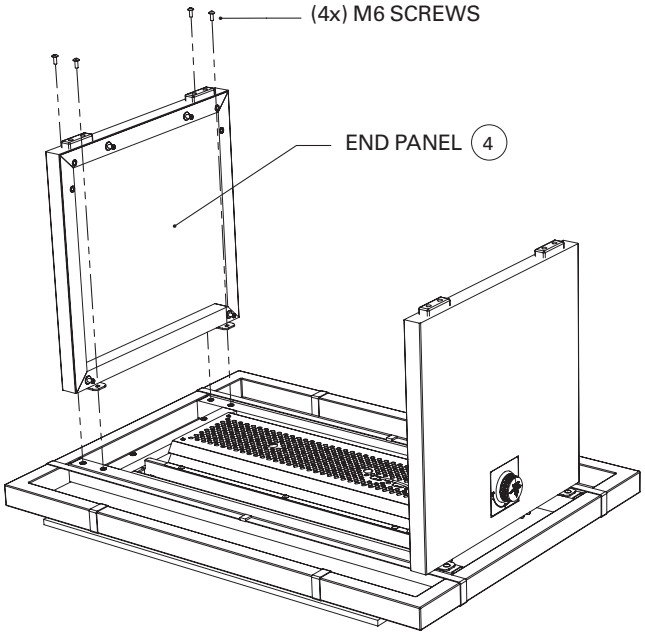

STEP 4A

Locate the (4x) press-fit studs on the End Panels.

Mount the Propane Cylinder H-Frame Support onto the press-fit studs of the End Panels.

Fit the holes in the ends of the H-Frame Support over the studs of one End Panel. Then, fit the holes over the studs of the other End Panel. You may need to lightly pull the second End Panel back a bit to fit the holes over the studs.

IMPORTANT: Note the labels with Arrows on the H-Frame Support. The Arrows should point up to the sky during the installation.

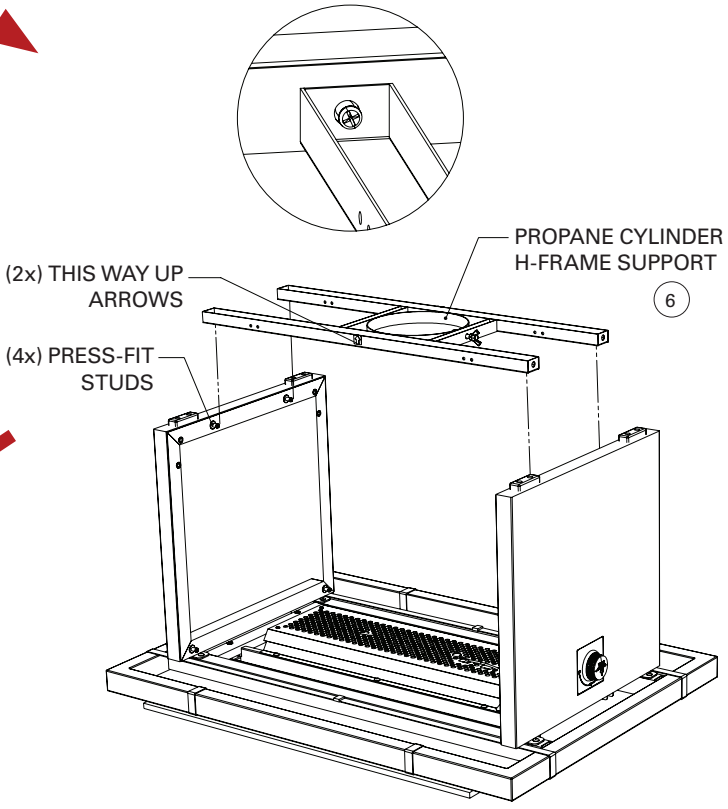

STEP 4B

Mount (2x) Cross Bars.

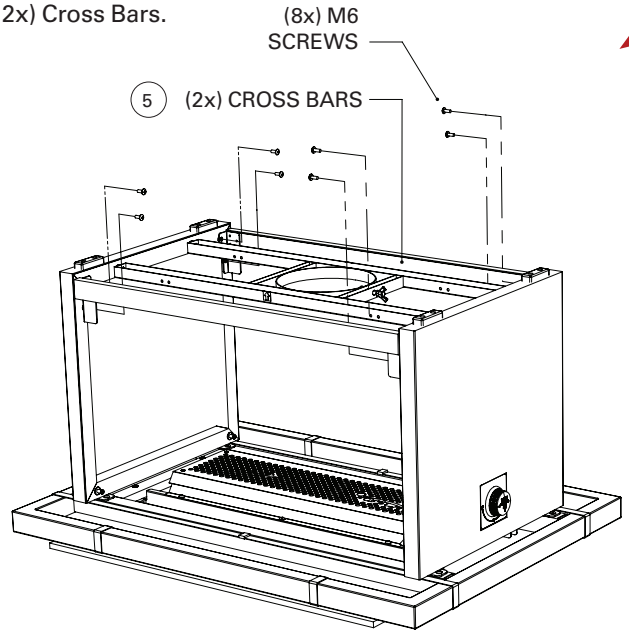

STEP 4C

Once the (2x) Cross Bars are firmly installed, firmly tighten the (8x) End Panel screws.

SECTION 1: ASSEMBLY (continued)

⚠ ATTENTION:

At this point, if you have purchased the Glass Lid accessory, you should install your glass lid mounting brackets now, before Step 5. Refer to your glass lid instruction manual for installation instructions. Hey, don't worry if you don't have your glass lid yet, there is still time to order one! Contact information is at the back of the manual. For now, proceed with your current installation and you can install the necessary parts later. It's a bit more time and effort down the line, but it'll be worth the investment!

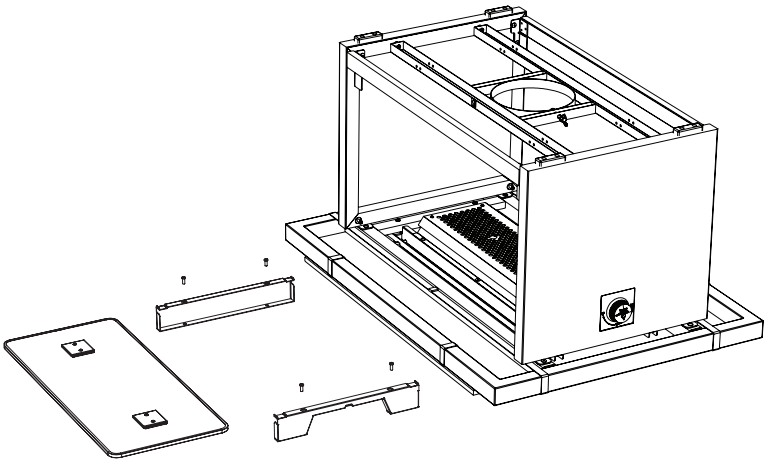

STEP 5

Turn fire table upright. Carefully remove the (2x) This Way Up Arrow stickers from the Propane Cylinder H-Frame Support.



HEAVY OBJECT.
TWO PERSON LIFT REQUIRED.

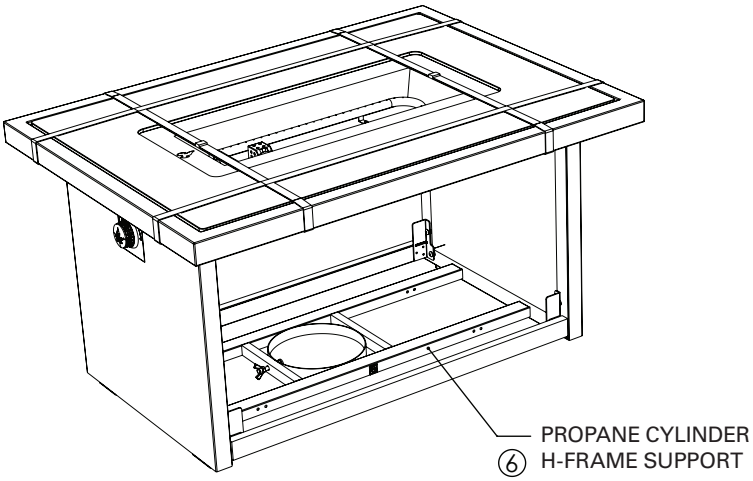

STEP 6

Cut and remove straps.

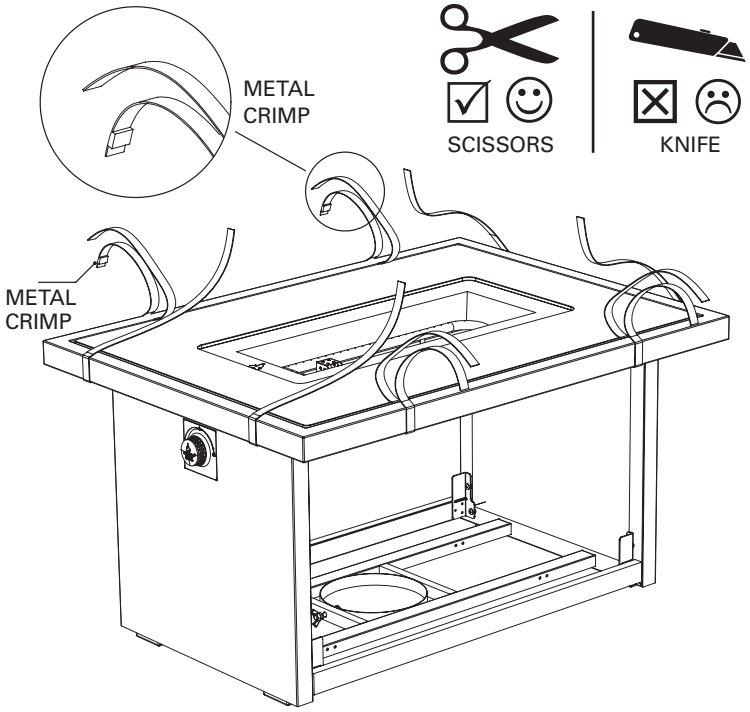

CAUTION! Watch for metal crimps. Avoid damaging the wicker when removing straps.

CAUTION! Watch for metal crimps located UNDER TABLE when removing straps.

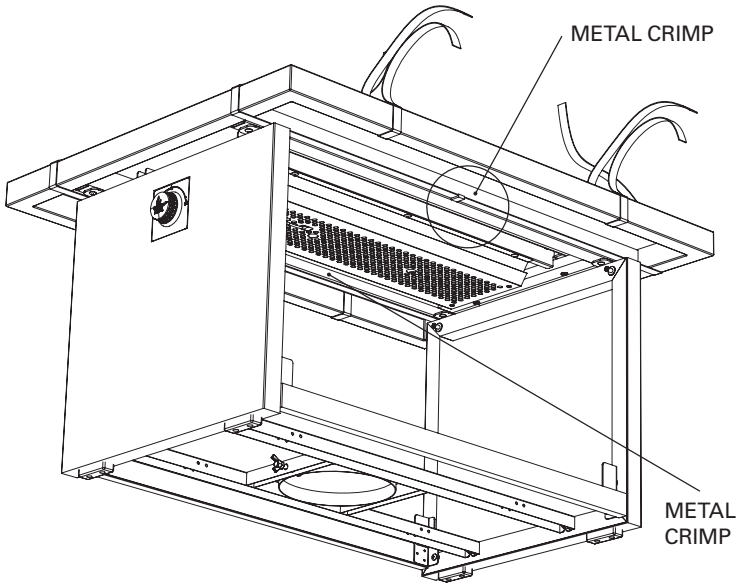

SECTION 1: ASSEMBLY (continued)

STEP 7: PROPANE CYLINDER ASSEMBLY

Place an approved 9kg (20lb) propane cylinder in to cylinder ring (Part 6). Couple the supplied gas regulator to the propane cylinder (see section labeled “Connection”). Perform LEAK TEST on all gas couplings (see section labeled “Leak Test”). Once all connections are verified to be secure, hand tighten the cylinder collar to affix cylinder.

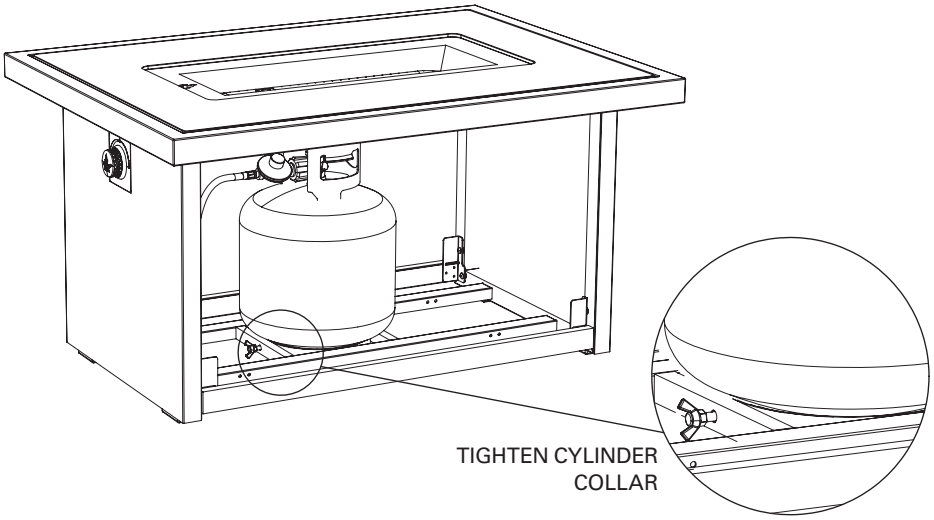

STEP 8: COMPARTMENT DIVIDER ASSEMBLY

Insert the wire Compartment Divider into holes provided in the LP cylinder H-Frame support.

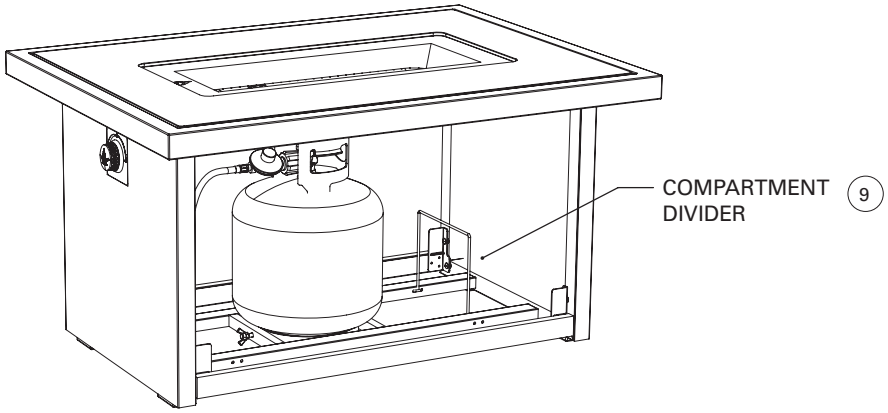

STEP 9: SIDE PANEL ASSEMBLY

Assemble (2x) Side Panels by fitting side panel tabs on cross bars and pushing closed.

To remove, simply use lift-rings and lift panel away.

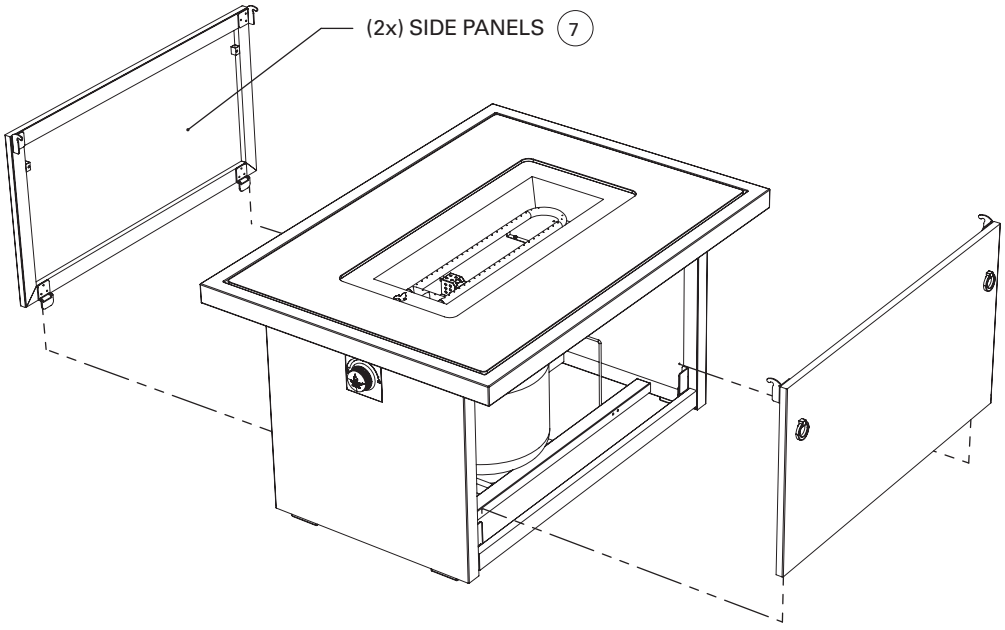

SECTION 1: ASSEMBLY (continued)

STEP 10: GLASS ROCKS ASSEMBLY

Open bag of Glass Rocks and arrange neatly and evenly in the burner tray. Ensure igniter cover is not covered by glass rocks (see photo). This helps air circulate. Take care to keep rocks out of the igniter cover. Keep igniter clean of dust. For best flame results adjust the rocks to expose the burner tube holes.

Our preferred configuration is pictured here.



STEP 11

Your OUTLAND Fire Table is assembled and ready for use.

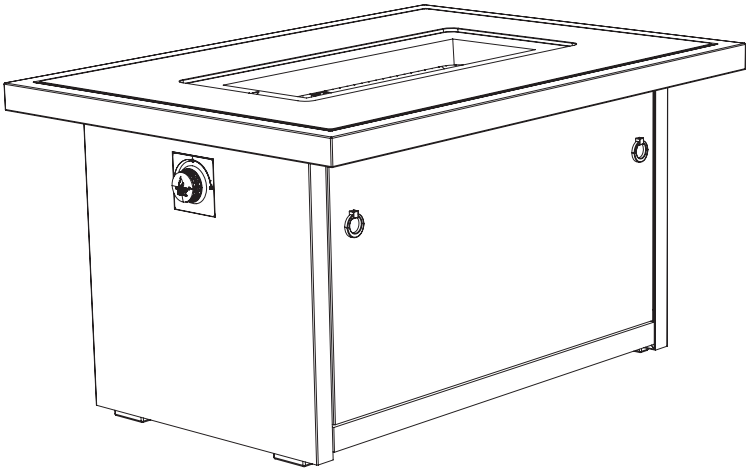

⚠ WARNING:

Never handle glass rocks which have not been allowed to cool from exposure to flame. Never attempt to rearrange rocks while unit is ignited.

NOTE: Rocks are not to exceed 4.5kg or 10lbs.

NOTE: Never use a lid or cover to extinguish the flame on your Fire Table.

⚠ WARNING:

Avoid glass dust. Always wear gloves to handle rocks; caution for glass dust when handling; use a rag to wipe glass dust. Glass dust may result during shipping.

NOTE TO USER:

Before igniting the unit for the first time, follow steps one through 5 in the below Ignition section.

SECTION 2: IGNITION

STEP 1

Ensure that the gas valve knob is in the "OFF" position by pushing and turning clockwise until the dial stops.



STEP 2

Connect the LP gas cylinder. See section labelled 'Connection'.

STEP 3

Ensure the gas hose is not contacting the top of the Fire Table enclosure and the tank is stabilized in the collar with the wing nut.

Caution: Always ensure the gas valve orifice and burner tube venturi is clear of all debris including spider webs.

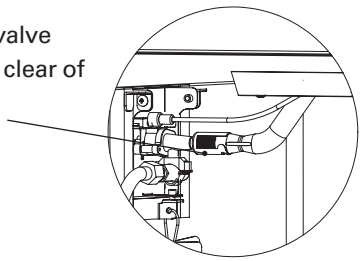

STEP 4

SLOWLY turn cylinder valve to the open position to avoid tripping the excess flow safety device in the gas regulator.
For more information about the excess flow safety device see Section 3 (page 13).

STEP 5

Leak Test all connections. See section labeled "Leak Test".

STEP 6

Your Fire Table is equipped with an auto spark ignition (piezo ignition). Push the knob in and quickly turn to the high flame mark. The ignitor will spark and ignite the gas. If ignition does not occur, turn the knob to the "off" position. Repeat the push-in and turn to high flame motion 2-3 times consecutively until the burner ignites. If your Fire Table still fails to ignite, turn the knob to the "off" position and wait 5 minutes before attempting the ignition sequence again.

WARNING: Ensure that no parts of your body, clothing, or any other combustible material are above the burner before, during and after ignition. Ensure the cover is stored safely away from the Fire Table when the Fire Table is in use.

STEP 7

Once the unit is burning normally set the dial to desired flame height.



⚠ WARNING:
Never leave the Fire Table unattended while in operation.

STEP 8 PERIODIC INSPECTION OF BURNER FLAMES



Upon igniting the appliance, visually verify that the burner is indeed burning as demonstrated in the image to the left. The presence of flames will confirm that the burner is burning. Periodically check that the burner flame is present during operation by visually inspecting the burner to ensure the presence of flames.



If there are no flames present, as demonstrated in the image to the left, the appliance is likely not burning. If this is the case, IMMEDIATELY turn the valve to the "off" position if it is not already and repeat the ignition procedure as outlined in Section 2.

SECTION 2: IGNITION (continued)

FIRE TABLE WON'T LIGHT? IGNITION PROBLEM?

IGNITION TROUBLESHOOTING

STEP 1

Wait 5 minutes for any gas to dissipate. Locate the igniter cable under table. Ensure the igniter cable is firmly attached to the gas valve. Follow the ignition sequence again. If still no results after three tries move to step 2 below.

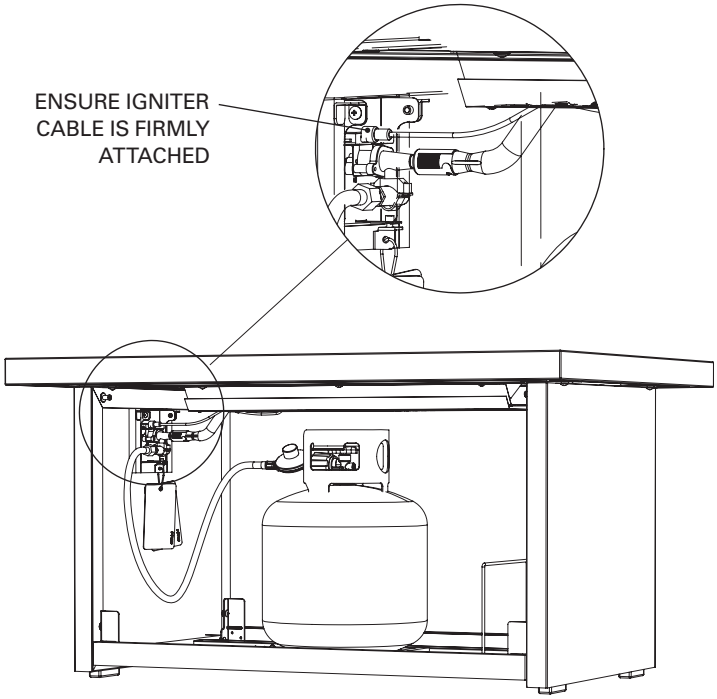

⚠ CAUTION:

Watch for glass dust.

STEP 2

Turn the gas cylinder valve to the 'Closed' position. Wait 5 minutes for any gas to dissipate. Ensure igniter cover is not covered by glass rocks. This helps air circulate. Inspect the ignition electrode (under igniter cover) to ensure it is free from dust and not blocked by glass rocks or other debris. Use a dry clean cloth or tissue to very lightly wipe clean igniter tip.

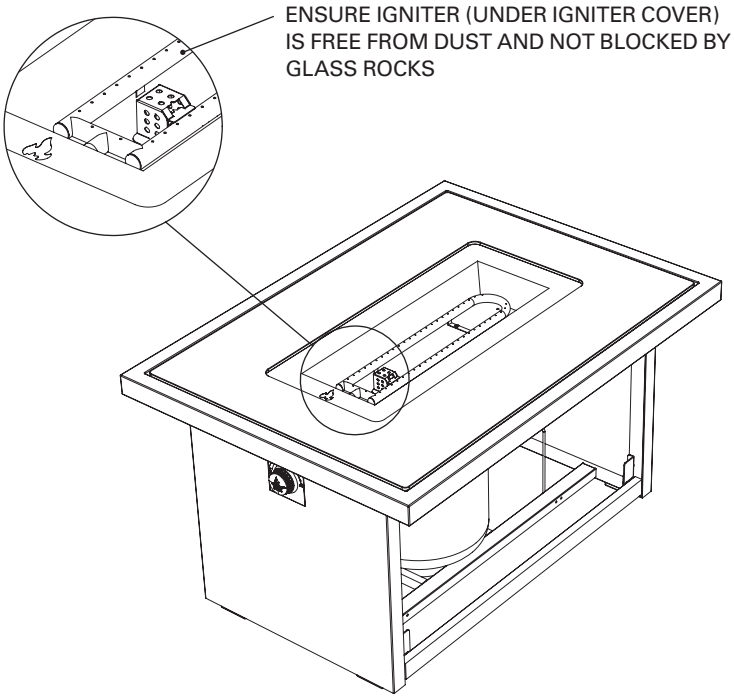

WARNING HAZARD: USE A TOOL OR WEAR GLOVES TO MOVE GLASS ROCKS. AVOID BLOWING GLASS DUST IN THE AIR.

After waiting for 5 minutes, visually inspect the spark by rotating the knob to high without turning the gas back on at the cylinder. Ensure the spark gap is 3-5mm (1/8"-3-16") from the burner port and has a clear path. Once you ensure the igniter is operating properly repeat the ignition sequence in section 2.

SECTION 3: GOT A LOW FLAME?

STEP 1

Check propane level. If less than half full replace the cylinder. Repeat the ignition sequence in section 2.

STEP 2

If the propane cylinder is full and your Fire Table experiences low flame, or flame height does not appear to be normally adjusted by the gas knob, it is likely that the excess flow safety device has been tripped in the hose regulator.

CORRECTIVE ACTION

a. Close propane cylinder valve.

b. Open and then close Fire Table gas knob valve to release pressure.

c. Disconnect and reconnect the propane cylinder valve connection.

d. Slowly open propane cylinder valve.

e. Perform Leak Test and follow Ignition sequence.

WHAT IS AN EXCESS FLOW SAFETY VALVE? (EFV)

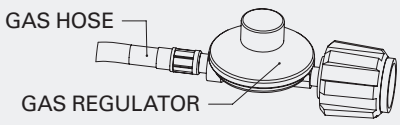

The EFV is a safety mechanism contained within every propane gas regulator. The purpose of the EFV is to restrict the gas supply if too much gas is flowing too quickly through the gas hose. For example this could happen if the gas hose was severed. It is normal that your Fire Table EFV trips if you open the propane tank valve too quickly or if you leave the Fire Table gas knob open before lighting, or both.

SECTION 4: EXTINGUISHING THE APPLIANCE

STEP 1

Access the Fire Table interior. Turn the gas cylinder valve to the 'Closed' position.

STEP 2

Turn the gas knob on the Fire Table to the 'OFF' position by pushing and turning the knob clockwise.

STEP 3

Allow unit to cool for at least five (5) minutes before relighting.

SECTION 5: FIRE TABLE MAINTENANCE

Your Outland Fire Table requires periodic maintenance to keep it in good running order. Follow the steps below to ensure your appliance will provide you with the best possible performance:

1. Keep your Fire Table out of the rain and store it in a dry place. Fire Table accessories such as covers can be purchased at www.outlandliving.com or by calling 888-514-1663.
2. This device has been engineered to provide the maximum amount of heat and comfort. If you experience any signs of your propane cylinder 'freezing off' or start to experience lower flames than usual, please simply turn the burner control setting to low for 5–10 minutes, or replace the cylinder with a full one.
3. Ensure that you clean the top of your Outland Fire Table after every use to keep it looking GREAT. Simply use warm soap water to wipe down your Fire Table to keep it clean. Do not use abrasive cleaners. Especially, DO NOT USE PETROLEUM BASED SOLVENTS TO CLEAN YOUR FIRE TABLE AS THIS WILL DESTROY YOUR WICKER RESIN TABLE MATERIAL.
4. Remove any debris and leaves which may have accumulated in your Fire Table burner tray before igniting.

OUTLAND LIVING™ FIRE TABLE

Owner & Safety Manual

⚠ ATTENTION:

It is normal for your burner tray to tarnish during regular operation. The surface tarnish on the stainless steel appears as a rusty-dark brown and gold-yellow color (it is not rust!). The tarnish is caused by the heat of the flame and can be removed by using standard stainless-steel cleaning products (we recommend a product called "Barkeeper's Friend"). Use a non-abrasive pad to wipe in the direction of the grain of the stainless-steel (do not wipe in a circular motion, or against the grain, or scratches may appear). With a little 'elbow grease', the surface tarnish can be removed.

⚠ WARNING NOTES:

- Expected burn time: the anticipated burn time for your Outland Fire Table using a full 20 lb (9kg) propane cylinder is between 8 and 12 hours depending on where the flame height is set.
- This is NOT a toy.
- The fire table will become extremely hot during operation! - DO NOT TOUCH THE BURNER TRAY OR GLASS ROCKS while fire table is in operation!
- Do not place ANY cover on the fire table while the fire table is in operation.
- Do not rest anything on or over the burner tray while the fire table is in operation.
- The fire table is a decorative gas appliance only. NEVER cook food on the fire table. Do not use any type of accessory as a means to cook or keep food warm on the fire table.
- Wait at least 30 minutes after turning off the fire table to allow it to cool down before touching the burner tray, or glass rocks, or putting ANY cover over the fire table.
- Please ensure that all adults and children which use or are near a unit in use are aware of the hazard of high-surface temperatures present on the unit during use and should use caution and stay away to avoid burns or clothing ignition.
- Children should be supervised at all times when using this unit without exception.
- Do not place any objects other than supplied rocks inside the burner component of the Fire Table.
- Do not add wood or any other materials to the fire.
- Your OUTLAND Fire Table is designed to safely combust propane only.
- Do not connect to a remote gas supply. Consult a certified gas technician.
- Do not use this appliance if any part has been under water. Immediately call a qualified service technician to inspect the appliance and to replace any part of the control system and any gas control which has been under water.
- Do not leave this appliance uncovered in the rain.
- Fire Table accessories such as covers, lids, wind breaks, replacement rocks and parts can be purchased at www.outlandliving.com or by calling 888-514-1663.
- Always inspect and clear all valve and gas orifices of any foreign debris including spider webs prior to lighting.
- Never store a spare LP cylinder inside the LP cylinder compartment.
- Never leave the Fire Table unattended while in operation.

1 YEAR LIMITED WARRANTY - Customers in Canada and USA

All components are warranted by the manufacturer for a period of 1 year after date of purchase by the original owner against defects in materials and workmanship under normal use.
This warranty does NOT cover normal wear and weathering, assembly and/or maintenance OR use in a commercial application. At FMI Brands' sole discretion, products under warranty will be repaired and/or replaced at no charge to the customer.
Any returns sent back to FMI Brands must be sent via prepaid freight and in the original retail packaging.
Please register your OUTLAND Living product for proof of purchase and warranty at https://outlandliving.com/register-products/
For more warranty information and details please contact FMI Brands Inc. at info@outlandliving.com

FOR REPLACEMENT PARTS AND ACCESSORIES PLEASE VISIT WWW.OUTLANDLIVING.COM

The owner's manual is available as a free download from **www.outlandliving.com**

Replacement part orders can be sent by mail to the address on the cover of this booklet, or faxed to **(888) 797-9931.** Should you have any questions or comments regarding this appliance, please do not hesitate to contact FMI Brands Inc. at **(888) 514-1663** or E-Mail to **info@outlandliving.com**.