OUTLAND LIVING™ | FERNIE

Owner's Manual

OUTDOOR LIVING PERFECTED™

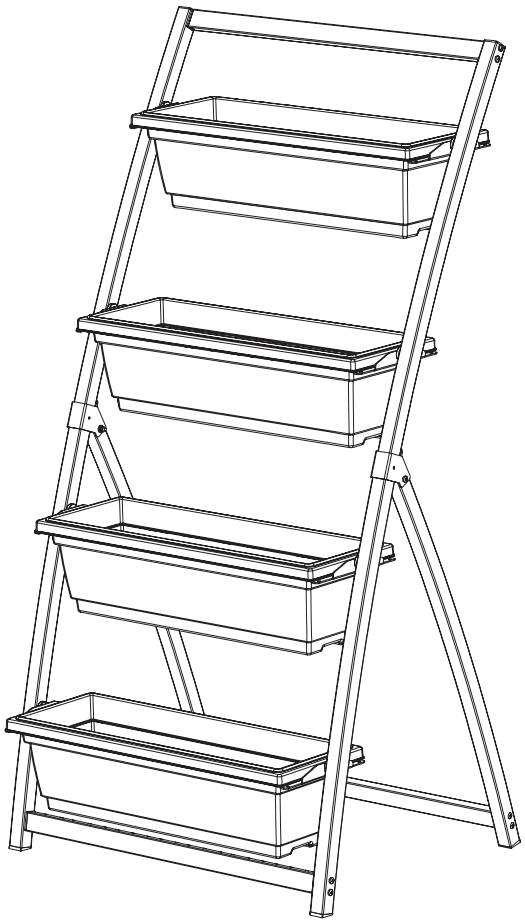

Vertical Garden FERNIE
Model number OLVG-315

FMI BRANDS INC. 107 – 19052 26 Avenue | Surrey, B.C. Canada V3Z 3V7
Toll Free: 1-888-514-1663 | Tel: (+1) 778-294-0988 | Email: info@outlandliving.com

D. OLVG-315.000.V1

Owner & Safety Manual

Model number OLVG-315

⚠ CAUTION:

Watch for sharp edges.
Wear protective gloves if necessary.

⚠ WARNING:

Improper installation, adjustment, alteration, service or maintenance can cause injury or property damage. Read the installation, operating and maintenance instructions thoroughly before installing or servicing this equipment.

NOTE TO INSTALLER:

Leave this guide with the consumer.

NOTE TO CONSUMER:

Please retain this guide for future use.

SUPPLIED PARTS & HARDWARE LIST:

PART #	DESCRIPTION	PICTURE
1	RIGHT TOP FRAME (x1)	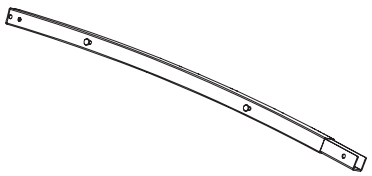
2	RIGHT BOTTOM FRAME (x1)	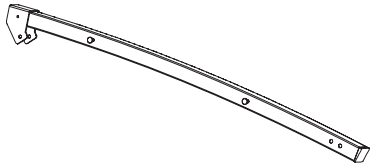
3	LEFT TOP FRAME (x1)	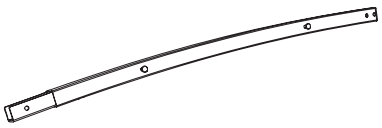
4	LEFT BOTTOM FRAME (x1)	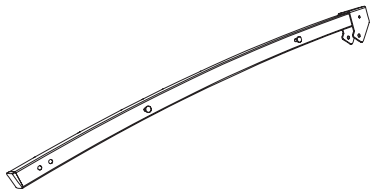

SUPPLIED PARTS & HARDWARE LIST (continued):

PART #	DESCRIPTION	PICTURE
5	CROSS BARS (x3)	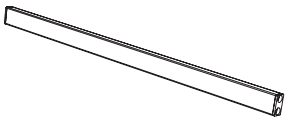
6	REAR LEGS (x2)	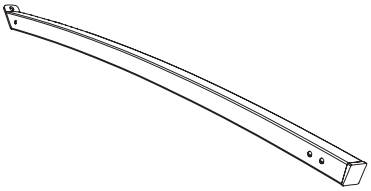
7	BIN HANGER BRACKET (x8)	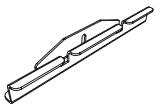
8	M5 x 40mm SCREW (x14)	

PART #	DESCRIPTION	PICTURE
9	M5 x 16mm SCREW (x2)	
10	M5 NUT (x2)	
11	PLASTIC PLANTER BIN (x4)	
12	BLACK PLASTIC SPACER (x8)	

REQUIRED TOOLS:

- Philips (cross) screw driver (PH2)
- 8mm wrench (5/16")

SECTION 1: ASSEMBLY

STEP 1

BOTTOM FRAME:

Place the LEFT BOTTOM FRAME, the RIGHT BOTTOM FRAME and one CROSS BAR on a flat work surface. Ensure that the bin hanger support pegs are facing inwards. Align the Cross Bar with the screw holes and affix tightly with(x4) M5 x 40mm SCREWS.

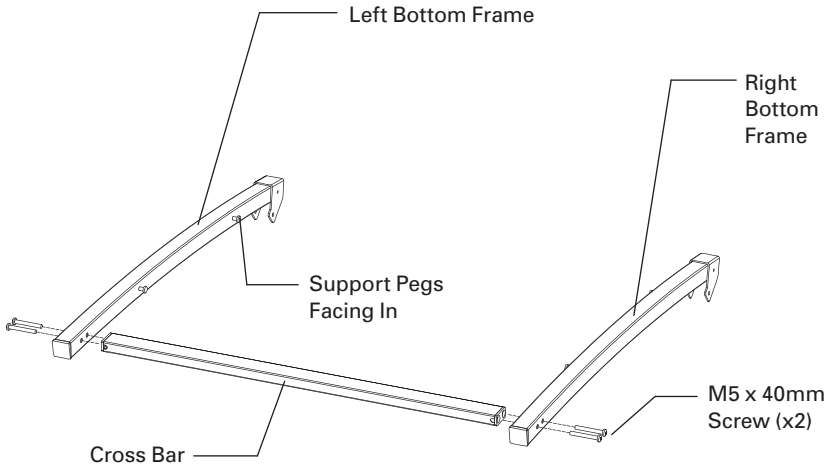

BOTTOM FRAME

STEP 2

TOP FRAME:

Place the LEFT TOP FRAME, the RIGHT TOP FRAME and one CROSS BAR on a flat work surface. Ensure that the bin hanger support pegs are facing inwards. Align the Cross Bar with the screw holes and affix tightly with (x4) M5 x 40mm SCREWS.

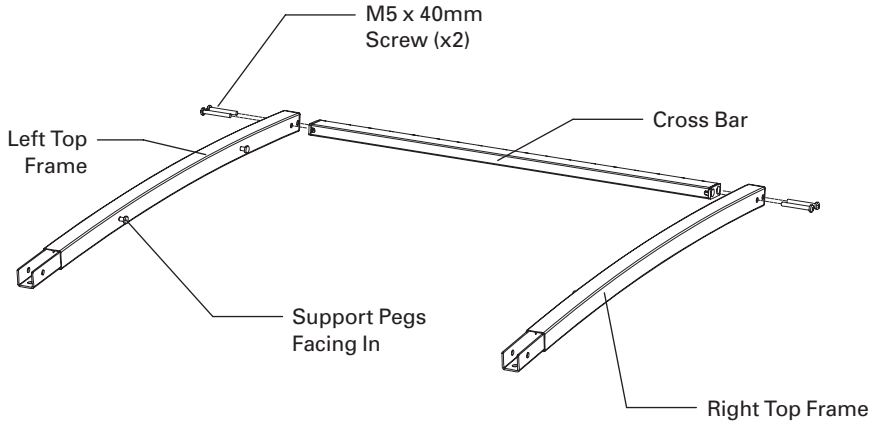

TOP FRAME

STEP 3

REAR LEG FRAME:

Place the REAR LEGS and the last CROSS BAR on a flat work surface. Align the screw holes and tightly screw in (x4) M5 x 40mm SCREWS.

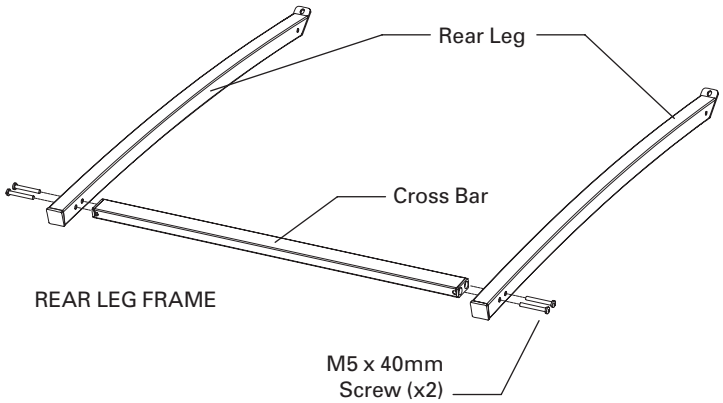

REAR LEG FRAME

SECTION 1: ASSEMBLY (continued)

STEP 4

Stand the BOTTOM FRAME (From STEP 1) and affix the REAR LEG FRAME (from STEP 3) using (x2) M5 x 40mm SCREWS and (x2) M5 LOCK NUTS. The M5 LOCK NUTS go on the inside of the frame. **DO NOT FULLY TIGHTEN** the screws and nuts in this step.

Use 8mm wrench (5/16") for the M5 LOCK NUTS.

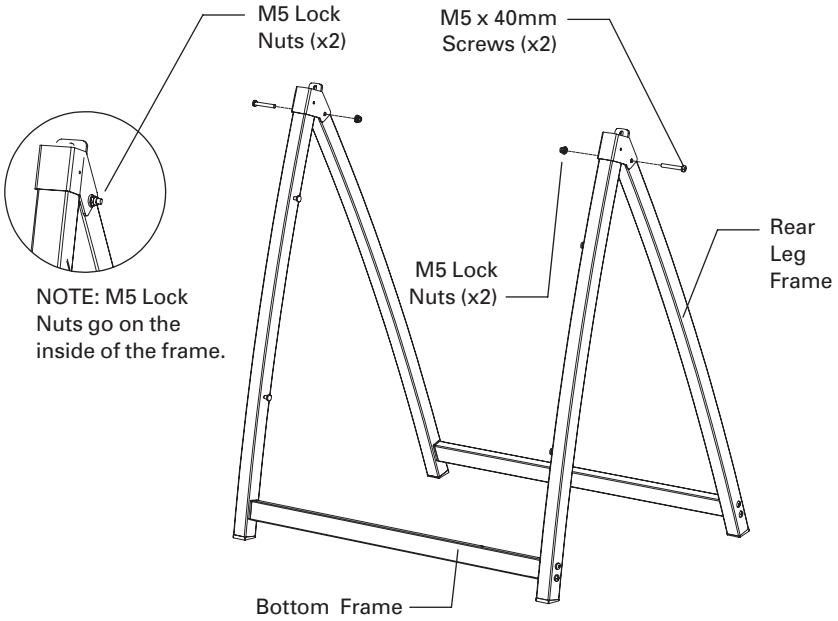

STEP 5

Insert the TOP FRAME (from STEP 2) into the assembly from STEP 4. Affix the REAR LEG FRAME to the TOP FRAME using (x2) M5 x 16mm SCREWS. Then tighten the LOCK NUTS and the M5 x 40mm SCREWS from STEP 4. Go around and check to confirm that all the screws have been tightened before proceeding to STEP 6.

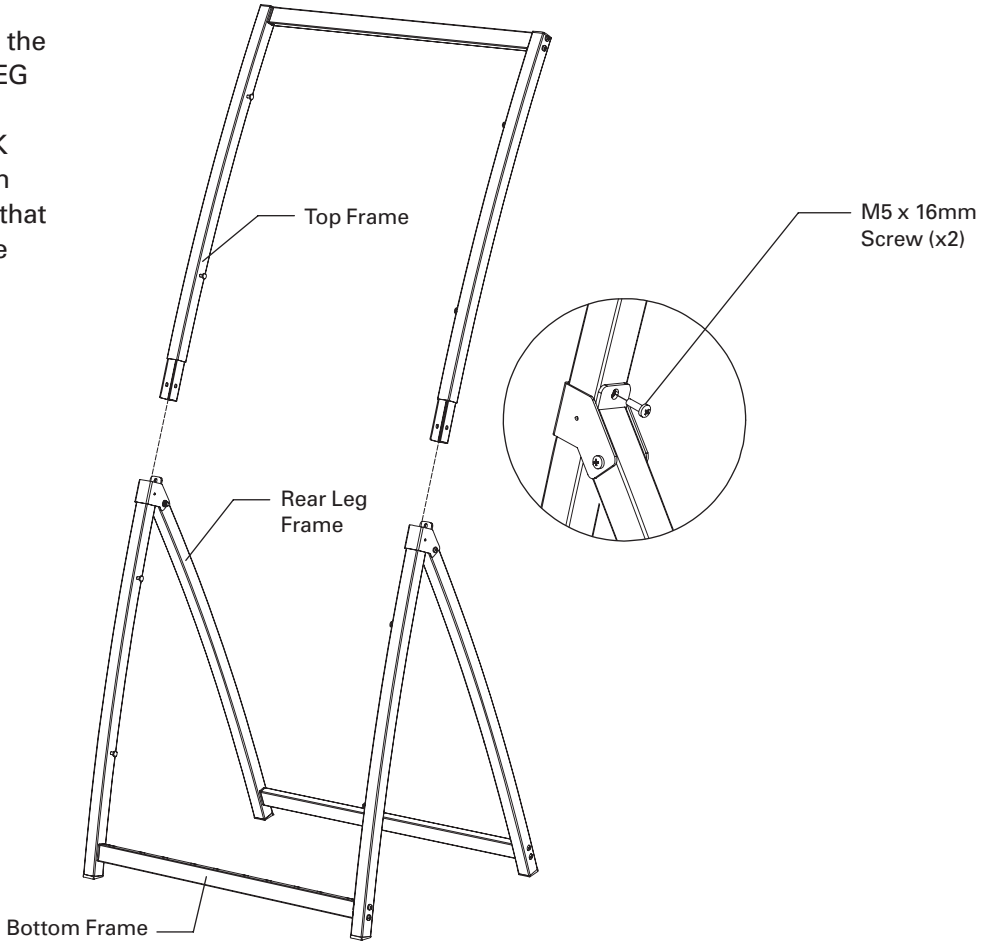

SECTION 1: ASSEMBLY (continued)

STEP 6

Place (x8) BLACK PLASTIC SPACERS on the bin hanger support pegs.

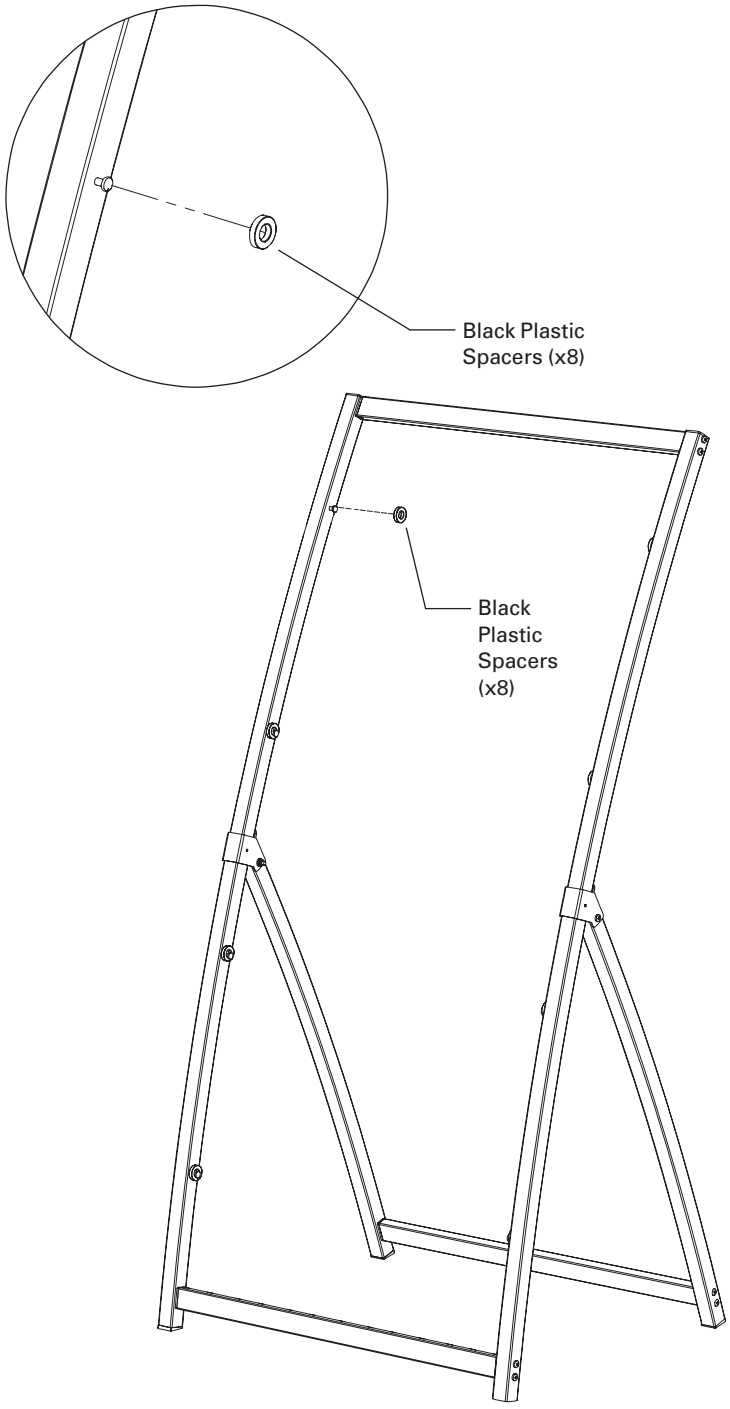

STEP 7

Place (x8) BIN HANGERS onto the bin hanger support pegs.

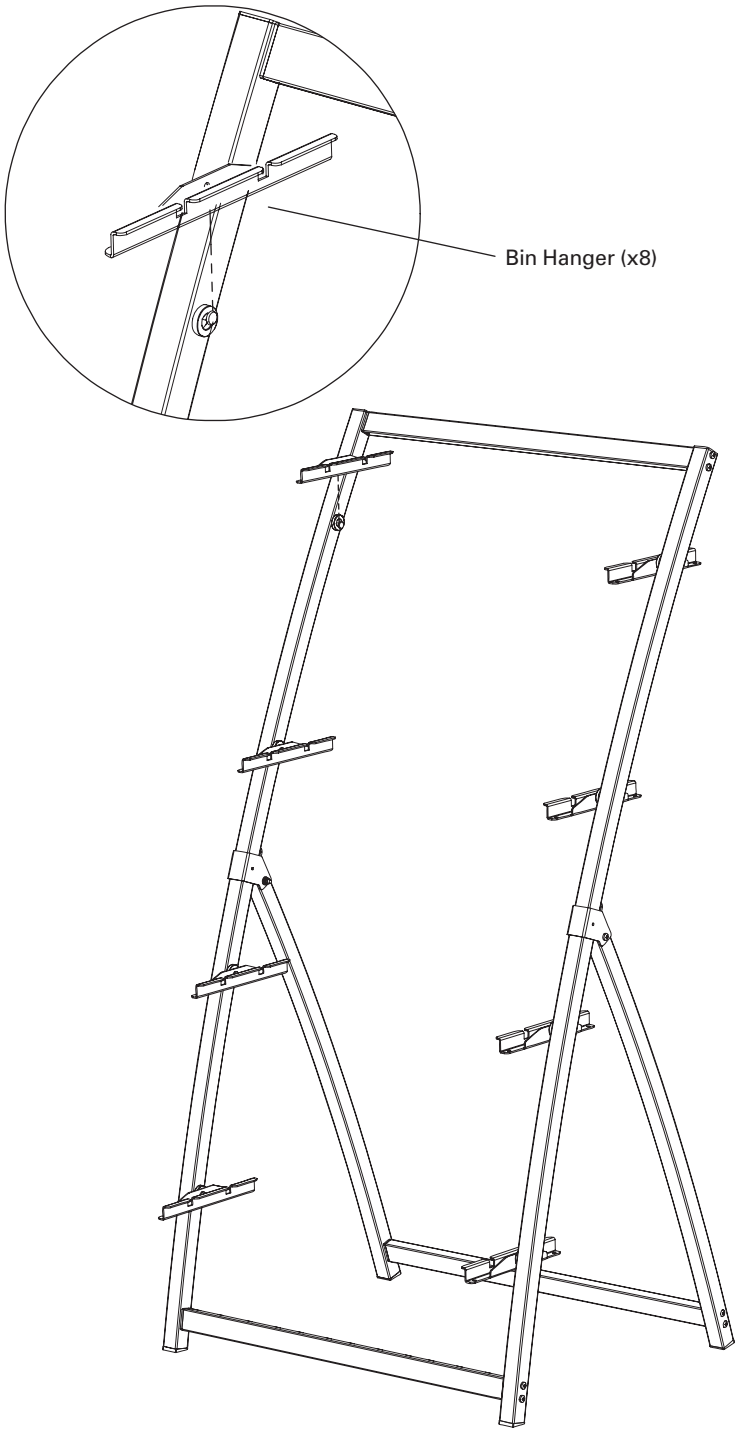

SECTION 1: **ASSEMBLY (continued)**

STEP 8
Place (x8) PLASTIC PLANTER BINS onto the BIN HANGERS.



STEP 9
Assembly is complete. Set the frame in the location where you want to display it, before loading the frame with fully loaded planter bins.

Your OUTLAND Vertical Garden is ready to use indoors or outdoors.

IMPORTANT: Always ensure your Vertical Garden stands straight and level.

IMPORTANT:
Always ensure all fasteners are firmly tightened.

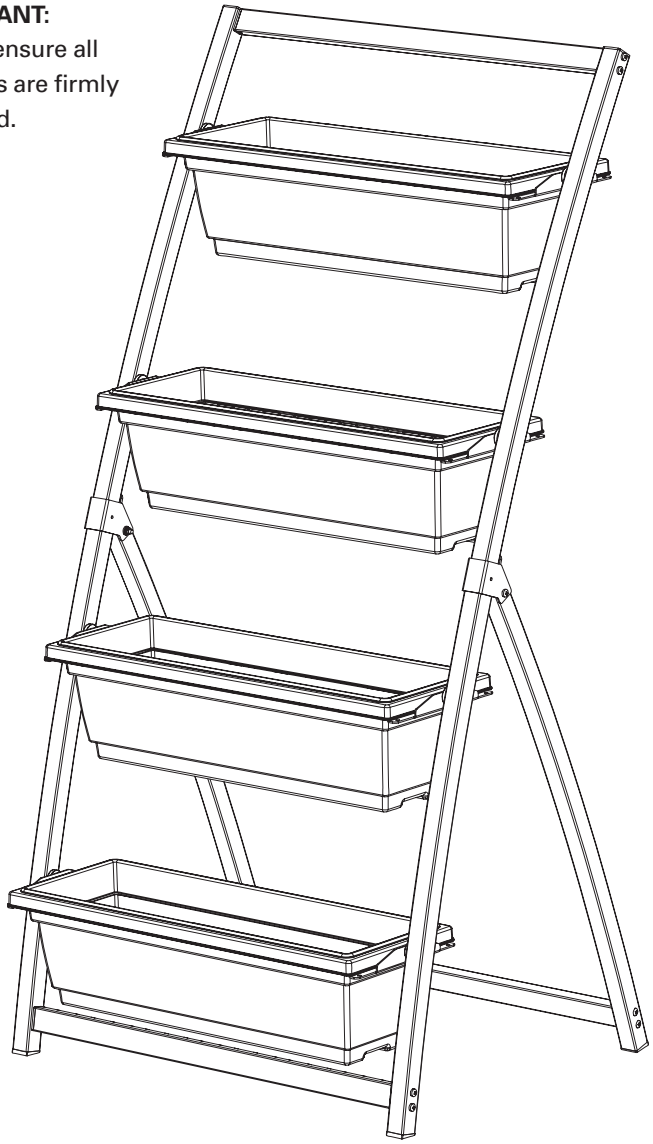

APPROXIMATE DIMENSIONS

The Vertical Garden frame measures approximately:
25″W x 19″D x 50″H (632mmW x 490mmD x 1270mmH).

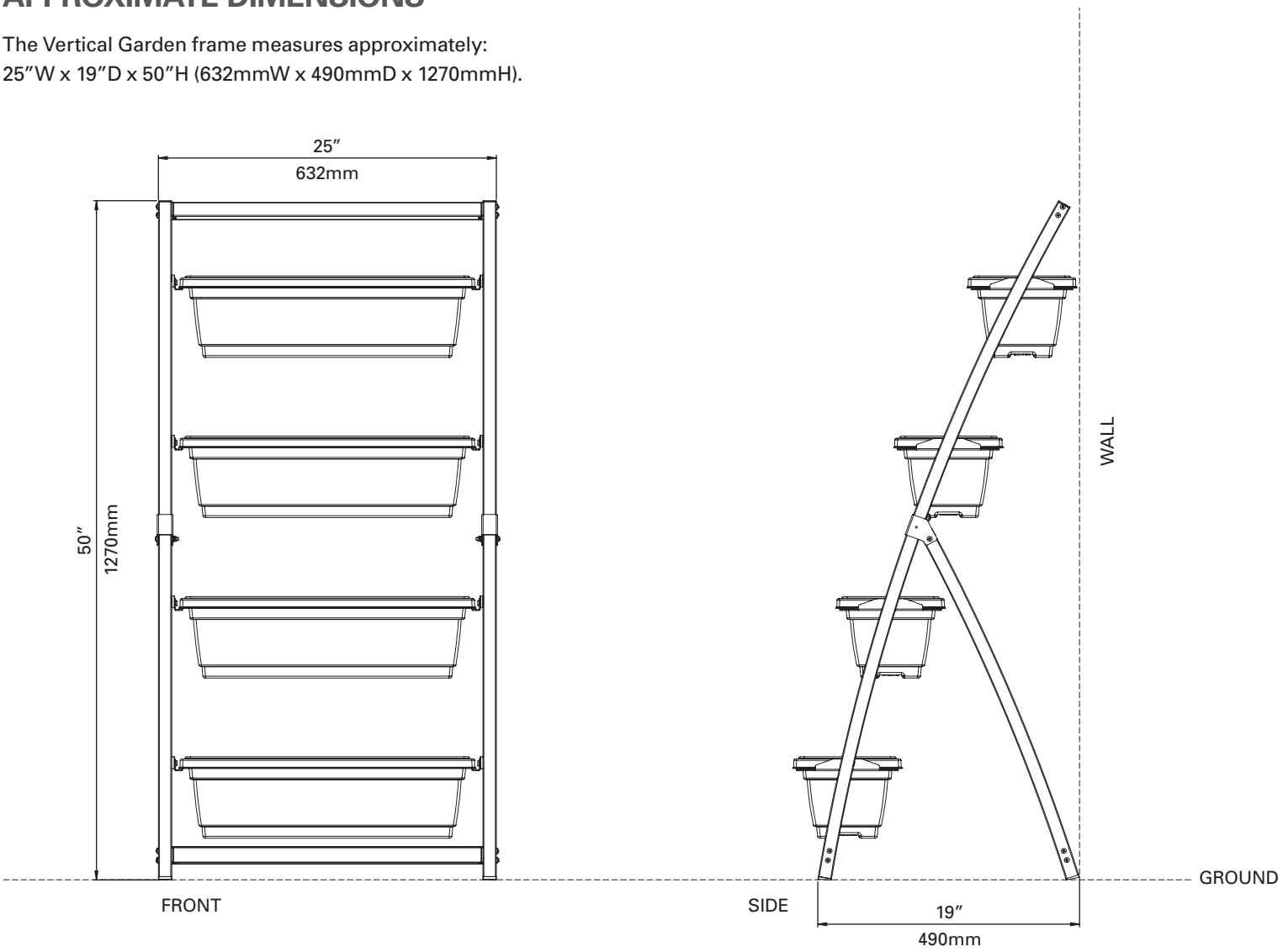

SECTION 2: PLANTER GARDENING

PLASTIC PLANTER BINS

The plastic bins are made from 100% new Polypropylene material (PP) and are food safe (BPA free, phthalate free, lead free, mercury free). The bins have a 3000hr UV stabilizer to protect the plastic from degrading in the outdoors.

DRAINAGE LAYER

Some gardeners recommend placing approximately one inch of drainage filler (pottery, shells, gravel, etc.) at the bottom of the planter bin, before adding the soil. This is optional. The bottom of the planter bins have raised feature denoting the drainage layer line.

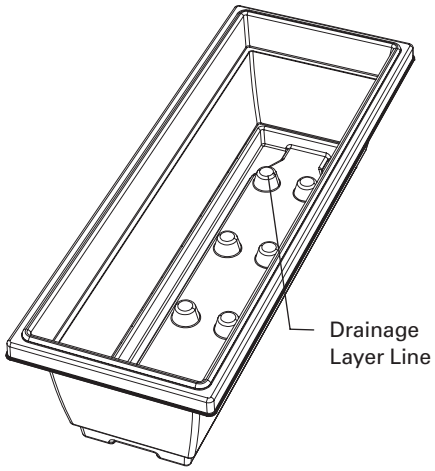

TIP: Why add a drainage layer? Some people do this to help prevent root rot. What this does is create a small water reservoir below the soil line. As the plant roots will prefer to stay in the soil above, they won't sit in accumulated water where they can potentially grow root fungus. The water in the lower drainage reservoir will eventually evaporate up through the soil, keeping the soil moist.

DRAIN HOLES

These bins do not come with drainage holes. Not everyone wants drainage holes in their planters. But, if you want to add drainage holes, we suggest using a 5/16" (8mm) drill bit (drill bit not included).

Attention: Before drilling holes in the bins, consider that pesky water may drip on the ground. TIP: Silicone tubing may be used to direct the flow of water. (Silicone tubing not included.)

1" WATER RESERVOIR

To create a 1" water reservoir:

Option A: Drill a 5/16" (8mm) sized hole approximately 1-1/8 inch up from the bottom of the bin, on the front face of the bin.

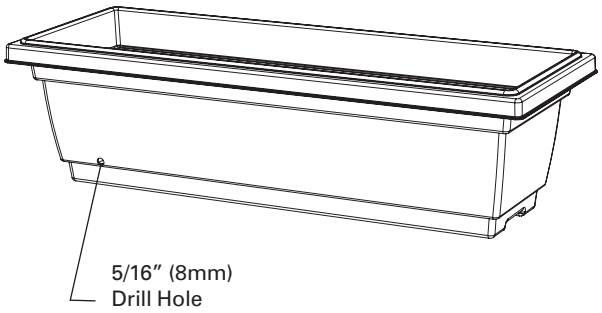

Option B: Drill a 5/16" (8mm) sized hole on the top of one of the raised features located on the bottom of the planter bins.

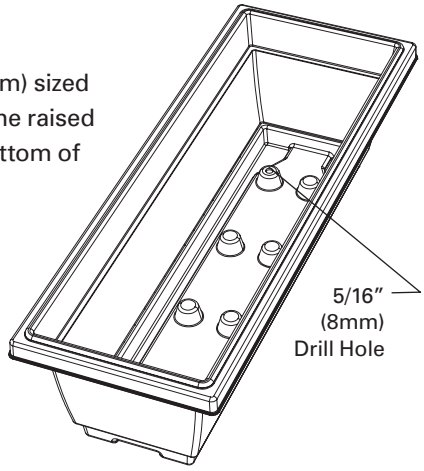

If you require drainage but not a 1" water reservoir, simply drill a 5/16" (8mm) sized hole on the bottom of the planter bins.

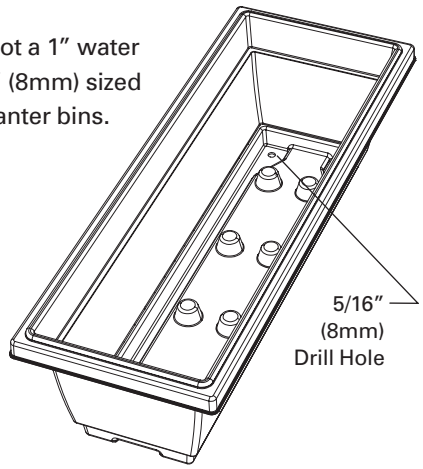

SECTION 2: PLANTER GARDENING (continued)

SOIL BUDGET ASSUMPTION:

The dimensions of the planter bins are approximately 22″L x 8″W x 6″H (555mmL x 205mmW x 150mmH)

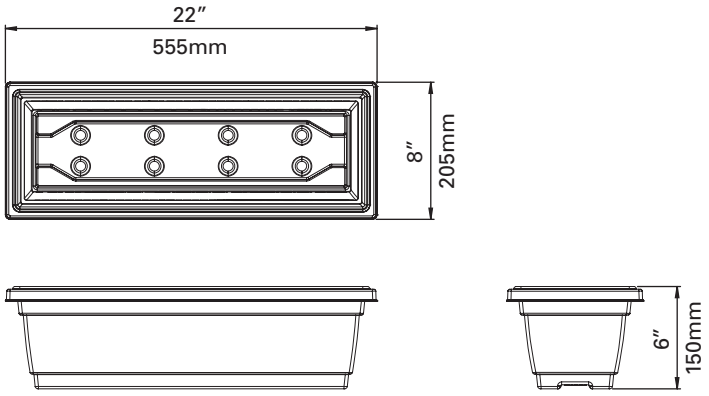

Add your preferred volume of Potting Soil Mix. (Soil not included). Plan your budget for 12L (10.6 Quarts) of soil mix per bin and/or adjust the volume of soil to suit your need.

SOIL BUDGET/1 BIN	SOIL BUDGET/4 BINS
0.4 cubic feet (ft^3)	1.6 cubic feet (ft^3)
0.02 cubic yard (yd^3)	.08 cubic yard (yd^3)
10.6 Imperial Quarts	42.4 Imperial Quarts
12 Litres (L)	48 Litres (L)

WATERING FEATURE

The OUTLAND Living vertical garden planter bins will rotate on the support pegs to make watering your plants easy and convenient.

⚠ CAUTION:

Do not tip the planter so far up that the bins fall out!



FEATURE: ROTATING BINS MAKE WATERING EASY AND CONVENIENT

SECTION 3: SET UP INSPECTION SEQUENCE

The Vertical Garden should be inspected before use and at least annually. More frequent cleaning and/or adjustments may be required as necessary.

Prior to each use:

- Ensure placement is on a level and firm surface able to hold the fully loaded weight of the frame, which is approximately 45-60kg (100-130lb).
- Ensure no parts are missing and all fasteners are firmly tightened.

SECTION 4: MAINTENANCE

Your Outland Vertical Garden is meant for indoor or outdoor use and requires periodic maintenance to keep it in good condition.

- Should any part of this appliance become soiled or dirty, wipe down with a damp wet cloth.

IMPORTANT: Do not use petroleum based, flammable or corrosive cleaning products on or near this unit.

This appliance is NOT a toy.

⚠ WARNING:
Do not climb on the Vertical Garden or use it as a ladder or serious injury, property damage and/or death may occur.

⚠ WARNING:
Do not drag or push the Vertical Garden with fully loaded planter bins! At worst, the frame could fall, causing serious injury, or death. At minimum, it could damage your floors. Always remove the planter bins before moving the frame.

SECTION 5: STORAGE

Your Vertical Garden has been designed to conveniently store away when not in use.

- We recommend to store your Vertical Garden under cover during winter, or when not in use.

Follow these instructions to ready for storage:

- Remove plastic Planter Bins from frame.
- Set aside the bin hanger brackets.
- Remove Rear Legs.
- Store conveniently. See you next season.

IDEAS FOR WHAT TO GROW

THIS LIST OF RECOMMENDED CROPS FOR YOUR VERTICAL GARDEN IS BY NO MEANS COMPLETE, BUT SHOULD HELP PROVIDE SOME IDEAS TO START YOUR GREEN THUMB:

- Lettuce (leaf varieties)
- Spinach
- Radish
- Arugula
- Baby Carrots
- Beets
- Chard
- Onions (Green, Scallion)
- Asian Greens (Tatsoi, Pak Choy, Mizuna, Gai-lon)
- Determinate (bush) tomato plants (small cherry tomatoes, salad varieties)
- Herbs (Basil, Thyme, Tarragon, Rosemary, Oregano, Cilantro, Dill, Savory, Mint, Sage, Chives, Bay, Parsley, Coriander, Sorrel, Lemongrass)

HERE IS A LIST OF ANNUALS FLOWERS WHICH YOU MAY LIKE TO TRY IN YOUR VERTICAL GARDEN:

- Alyssum
- Begonia
- Browallia
- Coleus
- Geraniums
- Impatiens
- Latana
- Lobelia
- Marigolds
- Periwinkle
- Nasturtiums
- Pansies
- Petunias
- Salvia
- Sanvitalia
- Snapdragons
- Thunbergia
- Zinnias

Note that plants grown in containers typically need to be watered more frequently than plants grown in the ground. We recommend to monitor your soil moisture and water regularly.

For best results, consult your local nursery for gardening tips when purchasing your garden materials.

Owner & Safety Manual

STOP:

Do not return this product to the store.

If you need help or parts, call the OUTLAND Hotline: **1-888-514-1663**

Get help for:

Missing/damaged parts • Assembly • Troubleshooting • Warranty Assistance • Product Information

1 YEAR LIMITED WARRANTY

Customers in Canada and USA

All components are warranted by the manufacturer for a period of 1 year after date of purchase by the original owner against defects in materials and workmanship under normal use. This warranty does NOT cover normal wear and weathering, assembly and/or maintenance OR use in a commercial application. At FMI Brands' sole discretion, products under warranty will be repaired and/or replaced at no charge to the customer. Any returns sent back to FMI Brands must be sent via prepaid freight and in the original retail packaging.

Please register your OUTLAND Living product for proof of purchase and warranty at

https://outlandliving.com/register-products/

For more warranty information and details please contact FMI Brands Inc. at info@outlandliving.com

FOR REPLACEMENT PARTS AND ACCESSORIES PLEASE VISIT WWW.OUTLANDLIVING.COM

The owner's manual is available as a free download from **www.outlandliving.com**

Should you have any questions or comments regarding this product, please do not hesitate to contact FMI Brands Inc. at **(888) 514-1663** or E-Mail to **info@outlandliving.com**.