OUTLAND LIVING™ | GREENWOOD

Owner's Manual

OUTDOOR LIVING PERFECTED™

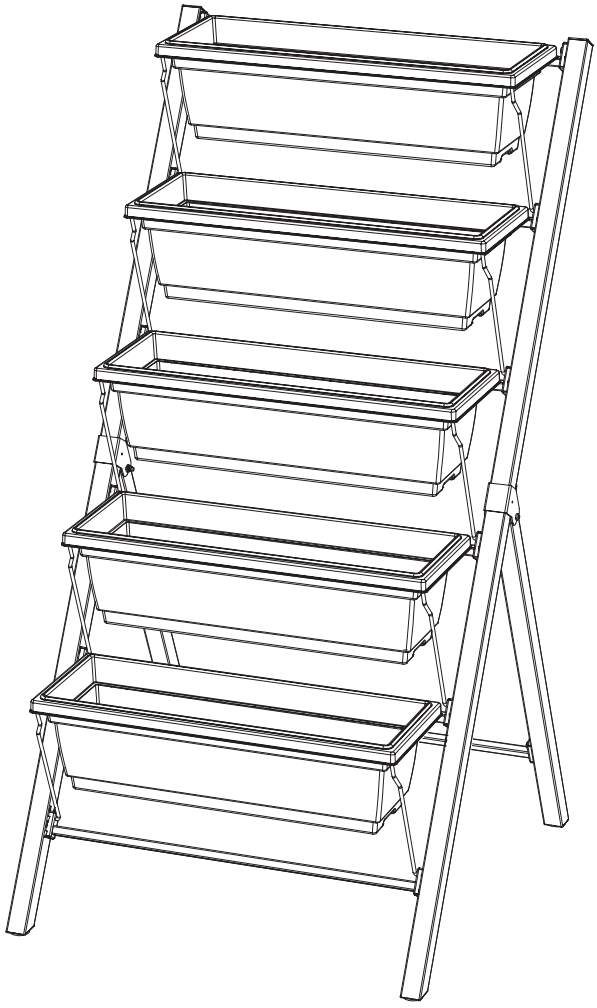

Vertical Garden GREENWOOD

Model number OLVG-320

D. OLVG-320.000.V0

FMI BRANDS INC.
107 – 19052 26 Avenue | Surrey, B.C. Canada V3Z 3V7 | Toll Free 1-888-514-1663 | Fax 1-888-797-9931

Owner & Safety Manual

Model number OLVG-320

⚠ CAUTION:

Watch for sharp edges.
Wear protective gloves if necessary.

⚠ WARNING:

Improper installation, adjustment, alteration, service or maintenance can cause injury or property damage. Read the installation, operating and maintenance instructions thoroughly before installing or servicing this equipment.

NOTE TO INSTALLER:
Leave this guide with the consumer.

NOTE TO CONSUMER:
Please retain this guide for future use.

SUPPLIED PARTS & HARDWARE LIST:

PART #	DESCRIPTION	PICTURE
A	PLANTER BIN (x5)	
B	RIGHT TOP FRAME (x1)	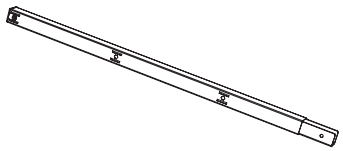
C	RIGHT BOTTOM FRAME (x1)	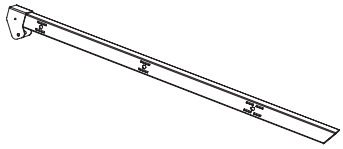
D	LEFT TOP FRAME (x1)	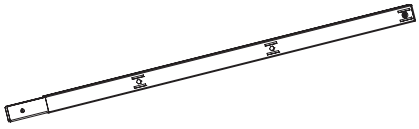

SUPPLIED PARTS & HARDWARE LIST (continued):

PART #	DESCRIPTION	PICTURE
E	LEFT BOTTOM FRAME (x1)	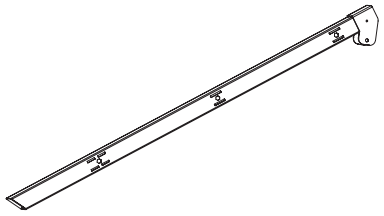
F	RIGHT REAR LEG FRAME (x1)	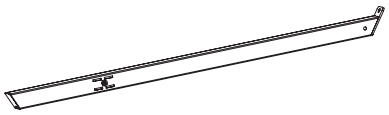
G	LEFT REAR LEG FRAME (x1)	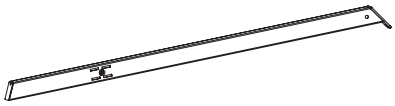
H	STRENGTH CROSS BAR (x2)	 *Wrapped in Orange Paper*
I	BIN HANGER CROSS BAR (x5)	

PART #	DESCRIPTION	PICTURE
J	WIRE BIN SUPPORT (x5)	
K	M5 x 45 mm SCREW (x2)	
L	M5 x 16 mm SCREW (x6)	
M	M5 LOCK NUT (x2)	
N	FOOTPAD (x4)	

SECTION 1: ASSEMBLY

STEP 1

BOTTOM FRAME:

Place (x1) LEFT BOTTOM FRAME, (x1) RIGHT BOTTOM FRAME, (x1) STRENGTH CROSS BAR (wrapped in ORANGE paper) and (x2) BIN HANGER CROSS BARS on a flat work surface. Insert the STRENGTH CROSS BAR into the bottom slot of the LEFT BOTTOM FRAME. Then insert the two BIN HANGER CROSS BARS into the upper two slots of the LEFT BOTTOM FRAME. Align the slots of the RIGHT BOTTOM FRAME with the cross bars and insert.

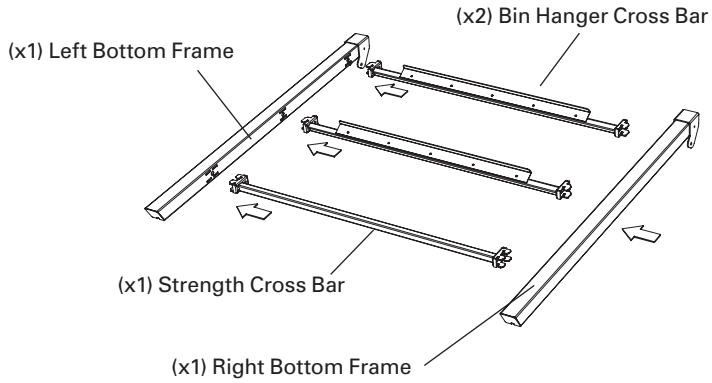

STEP 2

TOP FRAME:

Place (x1) LEFT TOP FRAME, (x1) RIGHT TOP FRAME and (x3) BIN HANGER CROSS BARS on a flat work surface. Insert the three BIN HANGER CROSS BARS into the three slots of the LEFT TOP FRAME. Align the slots of the RIGHT TOP FRAME with the cross bars and insert. Screw in (x2) M5 x 16mm SCREWS into the cross bar on the TOP slot.

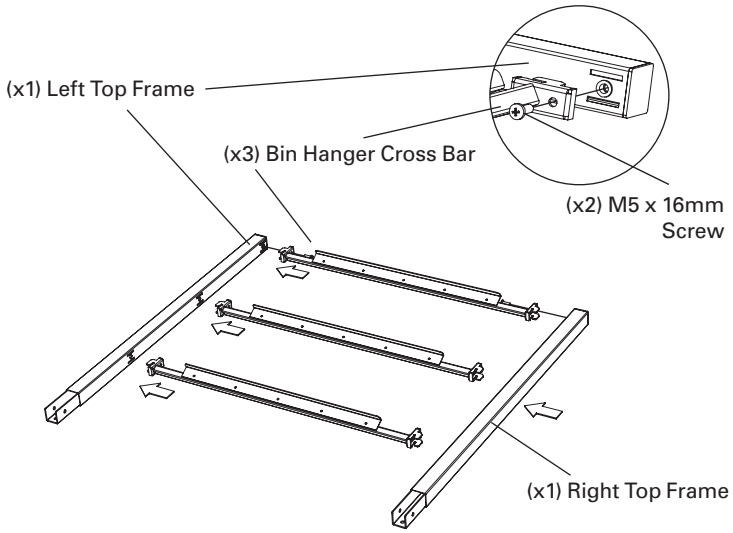

STEP 3

REAR LEG FRAME:

Place (x1) RIGHT REAR LEG FRAME, (x1) LEFT REAR LEG FRAME and (x1) STRENGTH CROSS BAR (wrapped in ORANGE paper) on a flat work surface. Insert the STRENGTH CROSS BAR into the slot on the LEFT REAR LEG FRAME. Align the slot of the RIGHT REAR LEG FRAME with the STRENGTH CROSS BAR and insert. Screw in (x2) M5 x 16mm SCREWS into the STRENGTH CROSS BAR.

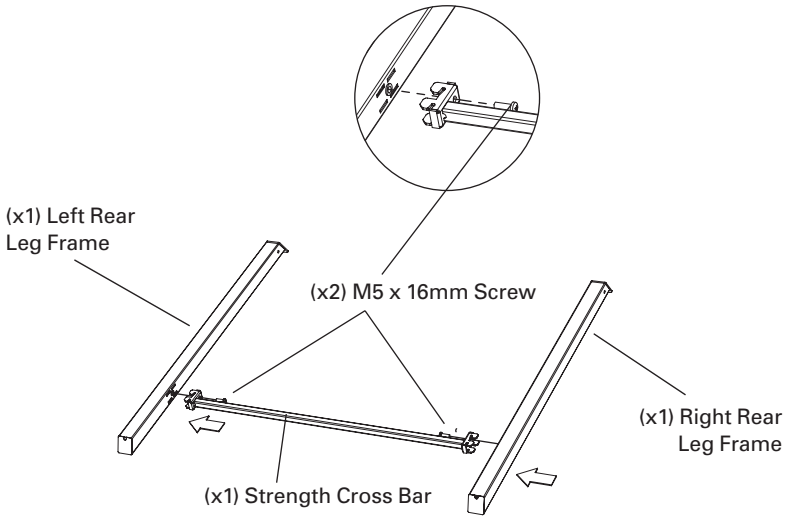

SECTION 1: ASSEMBLY (continued)

STEP 4

Stand the BOTTOM FRAME (From Step 1) and affix the REAR LEG FRAME (from STEP 3) using (x2) M5 x 45 mm SCREWS and (x2) M5 LOCK NUTS. The M5 LOCK NUTS go on the inside of the frame. DO NOT FULLY TIGHTEN the screws and nuts in this step.

Use 8mm wrench (5/16") for the M5 LOCK NUTS.

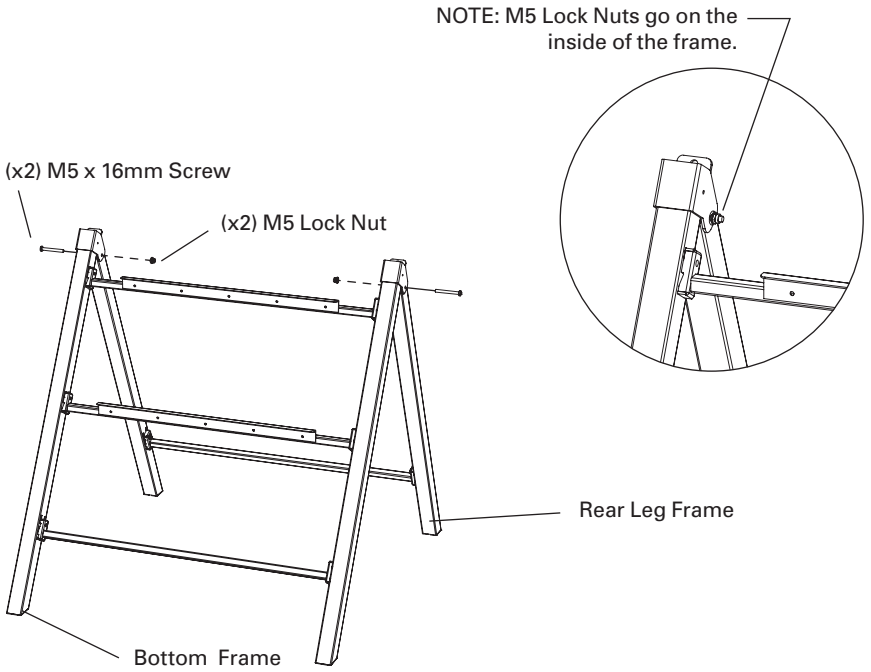

STEP 5

Insert the TOP FRAME (from STEP 2) into the assembly from STEP 4. Affix the REAR LEG FRAME to the TOP FRAME using (x2) M5 x 16 mm SCREWS. Then tighten the M5 LOCK NUTS and the M5 x 45mm SCREWS from STEP 4. Go around and check to confirm that all the screws have been tightened before proceeding to STEP 6.

ATTENTION:

Avoid pinching fingers when inserting TOP FRAME into BOTTOM FRAME ASSEMBLY.

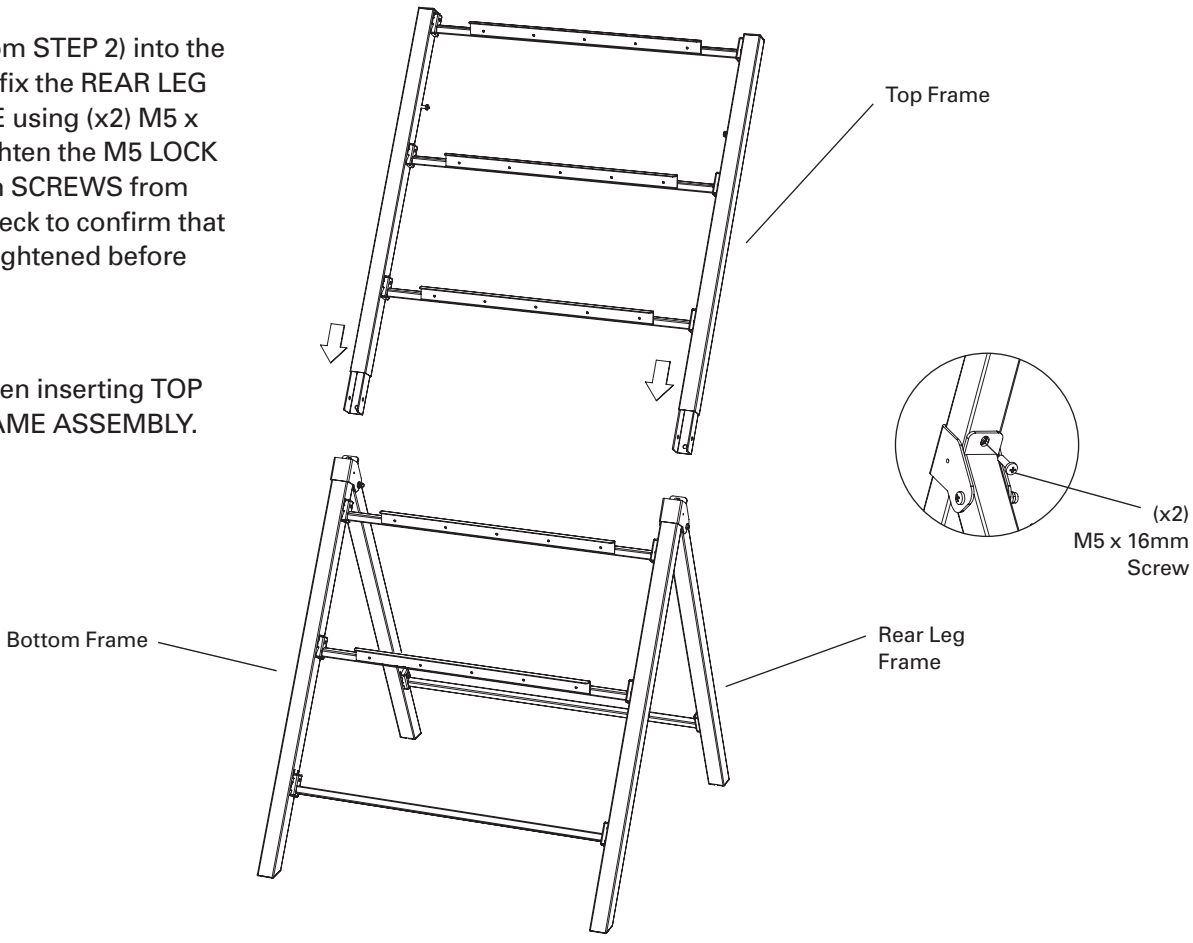

SECTION 1: ASSEMBLY (continued)

STEP 6

Insert (x5) WIRE BIN SUPPORTS into the hole on the cross bars.



STEP 7

Stick on the (x4) FOOTPADS on the feet of the Vertical Garden.

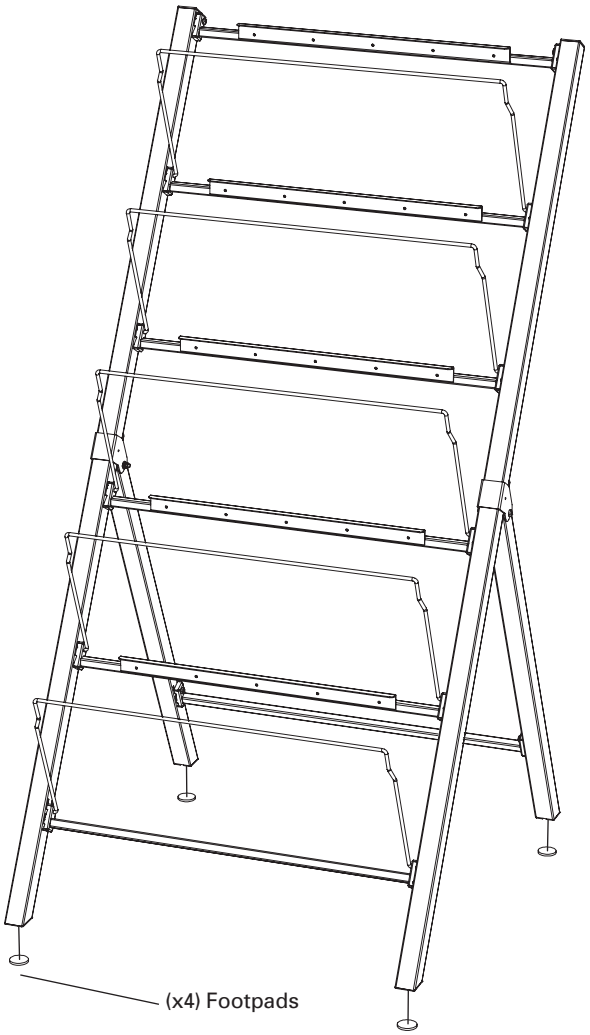

SECTION 1: **ASSEMBLY (continued)**

STEP 8
Place (x5) PLASTIC BINS onto the WIRE BIN SUPPORTS and the BIN HANGER CROSS BARS.

TIP: For ease of assembly, we suggest to start hanging the bins from the bottom up.

ATTENTION: Avoid pinching fingers when placing PLANTER BINS on WIRE BIN SUPPORTS and BIN HANGER CROSS BARS.

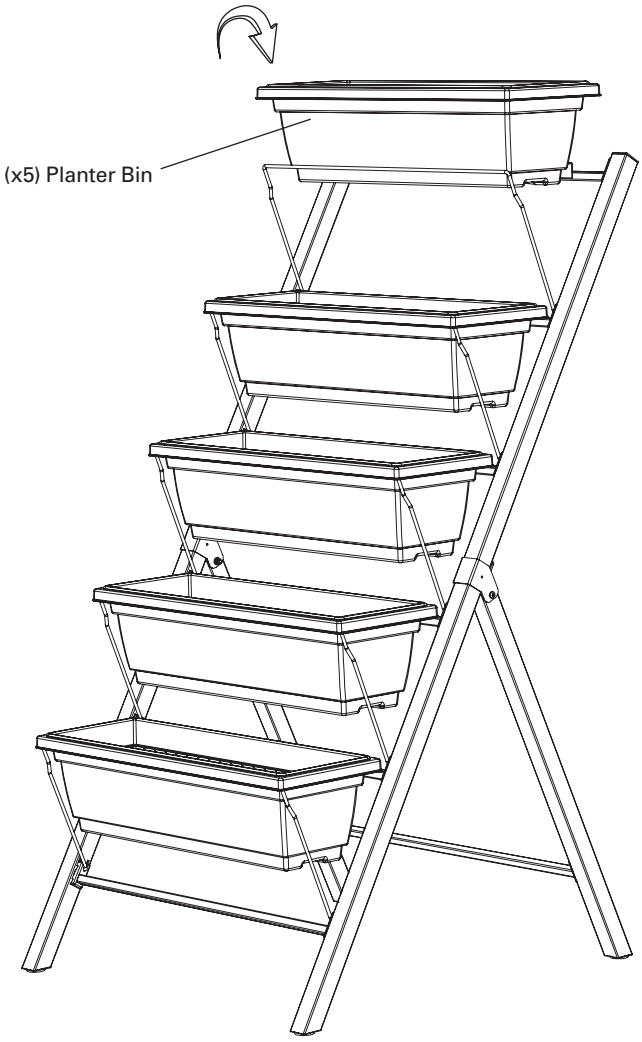

STEP 9
Assembly is complete. Set the frame in the location where you want to display it, before loading the frame with fully loaded planter bins.

WARNING: Do not let children climb or hang on the vertical garden, or injury or death may occur.

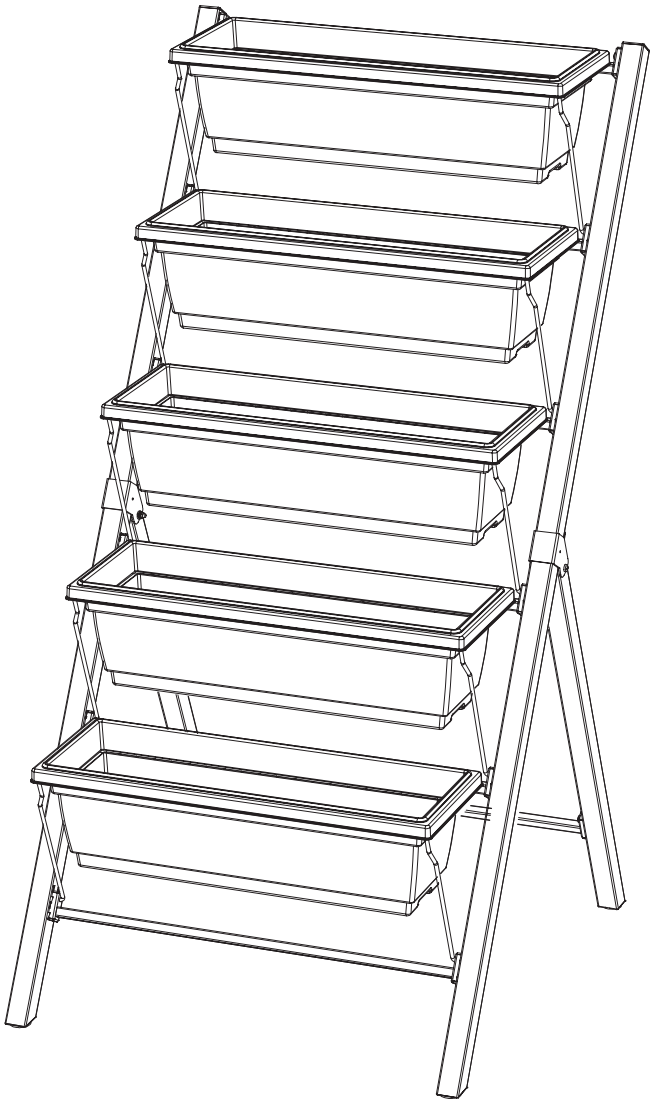

SECTION 1: ASSEMBLY (continued)

SOIL BUDGET ASSUMPTION:

Each planter bin is 555mmL x 205mmW x 150mmH
(22″L x 8″W x 6″H)

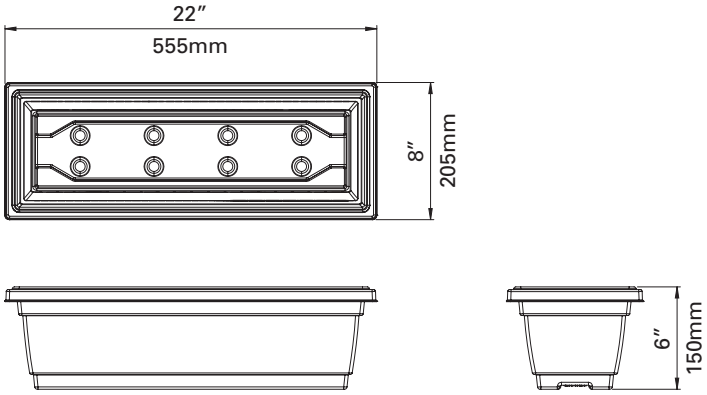

Add your preferred volume of Potting Soil Mix. (Soil not included). Plan your budget for 12L (10.6 Quarts) of soil mix per bin and/or adjust the volume of soil to suit your need.

SOIL BUDGET/1 BIN	SOIL BUDGET/5 BINS
0.4 cubic foot (ft^3)	2 cubic feet (ft^3)
.02 cubic yard (yd^3)	.1 cubic yard (yd^3)
10.6 Imperial Quarts (qt)	53 Imperial Quarts (qt)
12 Litres (L)	60 Litres (L)

SECTION 2: PLANTER GARDENING

PLASTIC PLANTER BINS

The plastic bins are made from 100% new Polypropylene material (PP) and are food safe (BPA free, phthalate free, lead free, mercury free). The bins have a 3000hr UV stabilizer to protect the plastic from degrading in the outdoors.

DRAIN HOLES

These bins do not come with drainage holes. Not everyone wants drainage holes in their planters. But, if you want to add drainage holes, we suggest using a 5/16″ (8mm) drill bit (drill bit not included).

DRAINAGE LAYER

Some gardeners recommend placing approximately one inch of drainage filler (pottery, shells, gravel, etc.) at the bottom of the planter bin, before adding the soil. This is optional. The bottom of the planter bins have raised feature denoting the drainage layer line.

TIP: Why add a drainage layer? Some people do this to help prevent root rot. What this does is create a small water reservoir below the soil line. As the plant roots will prefer to stay in the soil above, they won't sit in accumulated water where they can potentially grow root fungus. The water in the lower drainage reservoir will eventually evaporate up through the soil, keeping the soil moist.

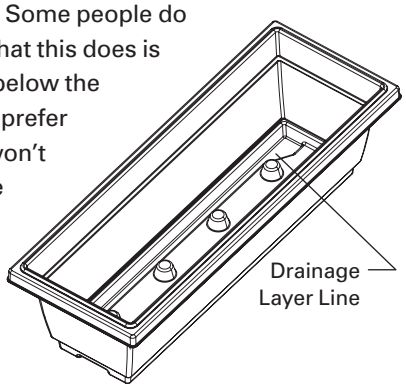

SECTION 2: PLANTER GARDENING (continued)

1" WATER RESERVOIR

To create a 1" water reservoir:

Option A: Drill a 5/16" (8mm) sized hole approximately 1-1/8 inch up from the bottom of the bin, on the front face of the bin.

Option B: Drill a 5/16" (8mm) sized hole on the top of one of the raised features located on the bottom of the planter bins.

If you require drainage but not a 1" water reservoir, simply drill a 5/16" (8mm) sized hole on the bottom of the planter bins.

Attention: Before drilling holes in the bins, consider that pesky water may drip on the ground. TIP: Silicone tubing may be used to direct the flow of water. (Silicone tubing not included.)

IMPORTANT

- Always ensure your Vertical Garden stands straight and level.

IMPORTANT

- Always ensure all fasteners are firmly tightened.

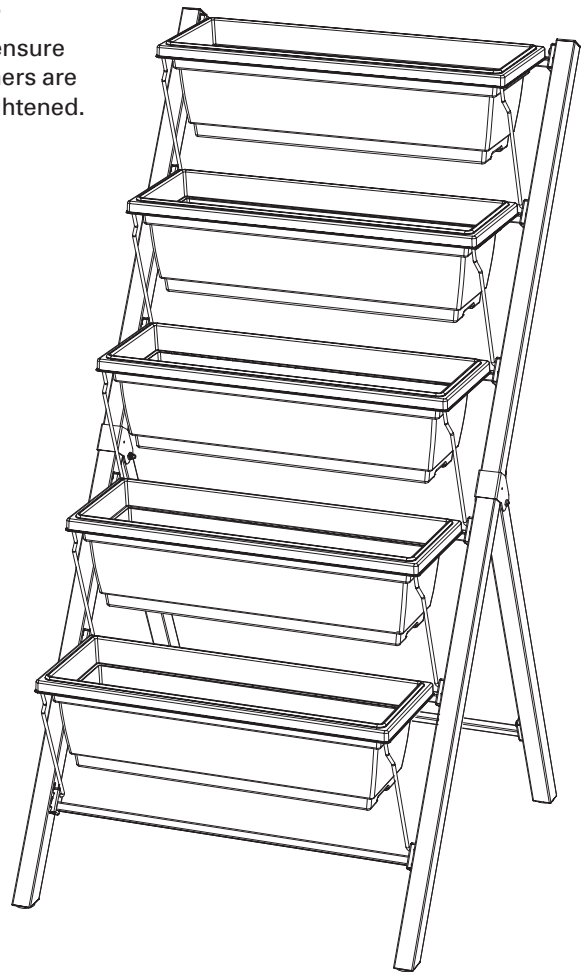

SECTION 3: SET UP INSPECTION SEQUENCE

The Vertical Garden should be inspected before use and at least annually. More frequent cleaning and/or adjustments may be required as necessary.

Prior to each use:

- Ensure placement is on a level and firm surface able to hold the fully loaded weight of the frame, which is approximately 55-70Kg (120-150lb).
- Ensure no parts are missing and all fasteners are firmly tightened.

SECTION 4: MAINTENANCE

Your Outland Vertical Garden is meant for indoor or outdoor use and requires periodic maintenance to keep it in good condition.

- Should any part of this appliance become soiled or dirty, wipe down with a damp wet cloth. Use only water based cleaners.
- Check fasteners and ensure firmly tightened.

IMPORTANT: Do not use petroleum based, flammable or corrosive cleaning products on or near this unit.

This appliance is NOT a toy.

⚠ WARNING:

Do not climb on the Vertical Garden or use it as a ladder or serious injury, property damage and/or death may occur.

SECTION 5: STORAGE

Your Vertical Garden has been designed to conveniently store away when not in use.

- We recommend storing your Vertical Garden under cover during winter, or when not in use.

Follow these instructions to ready for storage:

- Remove plastic Planter Bins from frame.
- Remove Rear Legs.
- Store conveniently. See you next season.

APPROXIMATE DIMENSIONS

The Vertical Garden measures approximately 48″ High and stands in a compact footprint of 25″ Wide x 29″ Deep. (1227mmH x 638mmW x 731mmD)

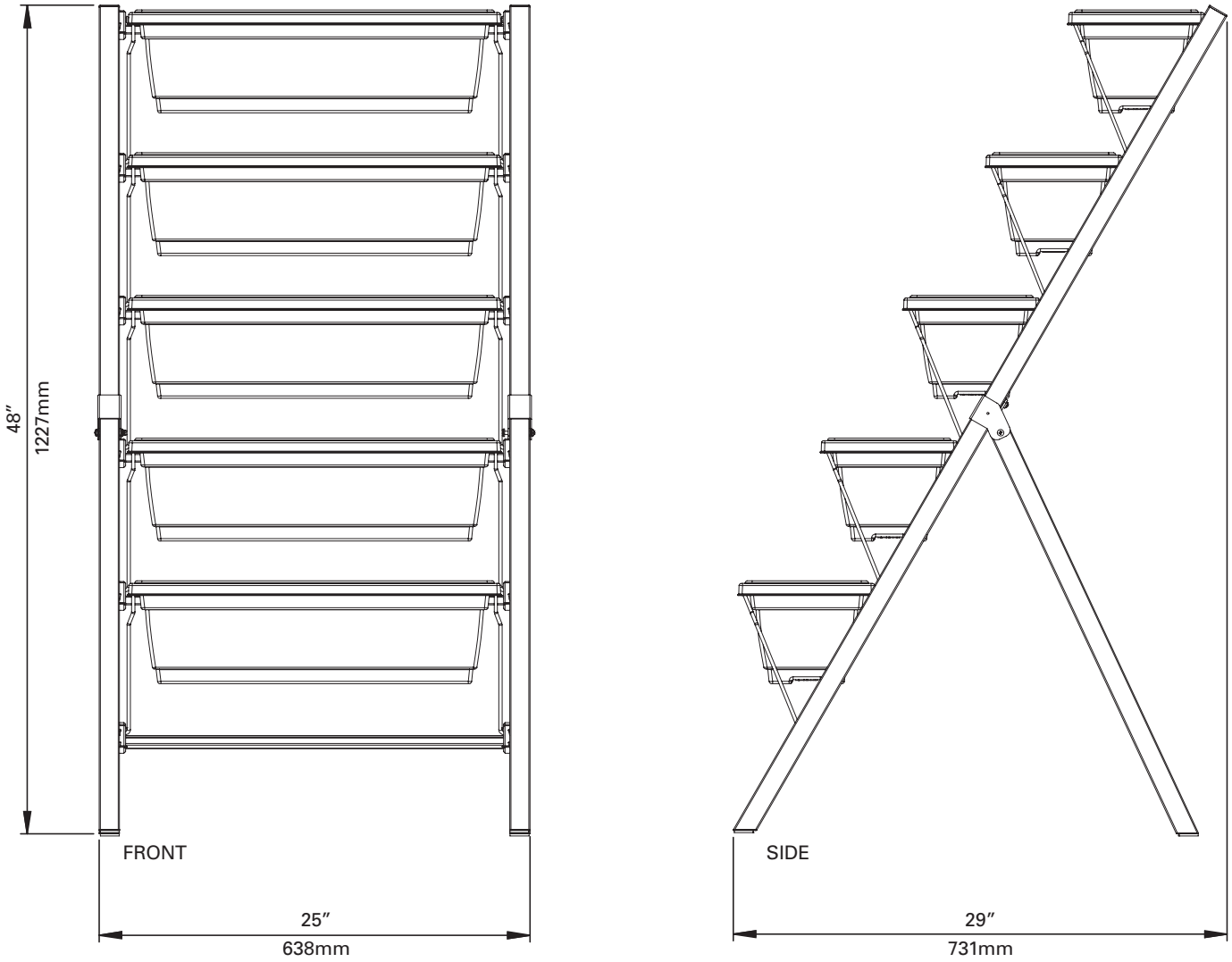

NOTES

1. The Vertical Garden measures approximately 48" High and stands in a compact footprint of 25" Wide x 29" Deep. (1227mmH x 638mmW x 731mmD)

2. The planter bins are 6" (150mm) Deep.

3. This list of recommended crops for your Vertical Garden is by no means complete, but should help provide some ideas to start your green thumb:

   - Lettuce (leaf varieties)
   - Spinach
   - Radish
   - Baby Carrots
   - Beets
   - Onions (Green, Scallion)
   - Asian Greens (Tatsoi, Pak Choy, Mizuna, Gai-lon)
   - Herbs (Basil, Thyme, Tarragon, Rosemary, Oregano, Cilantro, Dill, Savory, Mint, Sage, Chives, Bay, Parsley, Coriander, Sorrel, Lemongrass)

4. Here is a list of Annuals flowers which you may like to try in your Vertical Garden:

   - Alyssum
   - Begonia
   - Browallia
   - Coleus
   - Geraniums
   - Impatiens
   - Latana
   - Lobelia
   - Marigolds
   - Periwinkle
   - Nasturtiums
   - Pansies
   - Petunias
   - Salvia
   - Sanvitalia
   - Snapdragons
   - Thunbergia
   - Zinnias

Note that plants grown in containers typically need to be watered more frequently than plants grown in the ground. We recommend monitoring your soil moisture and water regularly.

For best results, consult your local nursery for gardening tips when purchasing your garden materials.

1 YEAR LIMITED WARRANTY

Customers in Canada and USA

All components are warranted by the manufacturer for a period of 1 year after date of purchase by the original owner against defects in materials and workmanship under normal use. This warranty does NOT cover normal wear and weathering, assembly and/or maintenance OR use in a commercial application. At FMI Brands' sole discretion, products under warranty will be repaired and/or replaced at no charge to the customer. Any returns sent back to FMI Brands must be sent via prepaid freight and in the original retail packaging.

Please register your OUTLAND Living product for proof of purchase and warranty at

https://outlandliving.com/register-products/

For more warranty information and details please contact FMI Brands Inc. at info@outlandliving.com

Owner & Safety Manual



Do not return this product to the store.

If you need help or parts, call the OUTLAND Hotline: **1-888-514-1663**

Get help for:

Missing/damaged parts • Assembly • Troubleshooting

• Warranty Assistance • Product Information

FOR REPLACEMENT PARTS AND ACCESSORIES PLEASE VISIT WWW.OUTLANDLIVING.COM

The owner's manual is available as a free download from **www.outlandliving.com**

Replacement part orders can be sent by mail to the address on the cover of this booklet, or faxed to **(888) 797-9931.** Should you have any questions or comments regarding this product, please do not hesitate to contact FMI Brands Inc. at **(888) 514-1663** or E-Mail to **info@outlandliving.com**.