OUTLAND LIVING™

PORTABLE PROPANE TONGA TORCH

Owner's Manual

OUTDOOR LIVING PERFECTED™

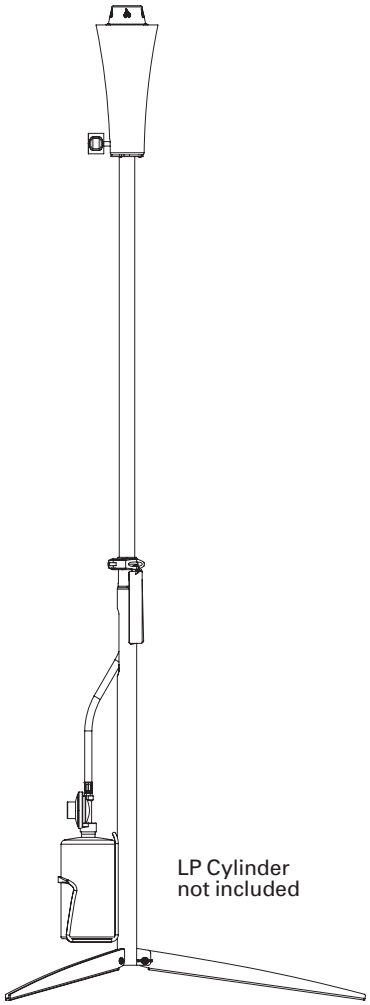

Model number FMTT-103

FMI BRANDS INC. 107 – 19052 26th Avenue | Surrey, B.C. Canada V3Z 3V7
Toll Free: 1-888-514-1663 | Tel: (+1) 778-294-0988 | Email: info@outlandliving.com

D.103.000.V0

OUTLAND LIVING™
PORTABLE PROPANE TONGA TORCH

Owner & Safety Manual

Model number FMTT-103 - Tested by CSA International

⚠ DANGER:

If you smell gas:

1. **Shut off gas to the appliance.**
2. **Extinguish any open flame.**
3. **If odour continues, keep away from the appliance and immediately call your gas supplier or fire department.**



WARNING! HOT SURFACE!

⚠ WARNING:

Do not store or use gasoline or other flammable vapors and liquids in the vicinity of this or any other appliance.

An LP-cylinder not connected for use shall not be stored in the vicinity of this or any other appliance.



HANDLE WITH CARE

⚠ WARNING:

For outdoor use only.

⚠ CAUTION:

For residential and recreational use only.



⚠ DANGER



CARBON MONOXIDE HAZARD

This appliance can produce carbon monoxide which has no odour.

Using it in an enclosed space can kill you.

Never use this appliance in an enclosed space such as a camper, tent, car or home.





CALIFORNIA PROPOSITION 65

⚠ **WARNING:** This product can expose you to chemicals including carbon monoxide (CO), soot and other gas-fuel combustion by-products, which are known to the State of California to cause cancer, birth defects or other reproductive harm. For more information go to Cancer and Reproductive Harm - www.P65Warnings.ca.gov.

⚠ CAUTION:

Watch for sharp edges, especially as noted in the manual. Wear protective gloves if necessary.

⚠ WARNING:

Improper installation, adjustment, alteration, service or maintenance can cause injury or property damage. Read the installation, operating and maintenance instructions thoroughly before installing or servicing this equipment.

⚠ WARNING:

If the information in this manual is not followed exactly, a fire or explosion may result causing property damage, personal injury or loss of life. Installation and service must be performed by a qualified installer, service agency or the gas supplier.

GAS SAFETY:

Max. Input: 7,000 BTU/h
Max Gas Supply Pressure: 250 PSI

MINIMUM CLEARANCES:

- **Bottom:** Non-Combustible Surface
- **Top:** 2.03m (80 inches)
- **Sides:** 0.914m (36 inches)

For Installation on (or over) non-combustible floors only.
This appliance shall be used only outdoors in a well-ventilated space and shall not be used in a building, garage or any other enclosed area.

⚠ WARNING:

a. Do not store a spare gas cylinder under or near this appliance.
b. Never fill the cylinder beyond 80 percent full.
c. If the information in "(a)" and "(b)" is not followed exactly, a fire causing death or serious injury may occur.

⚠ DANGER:

- Do not use this appliance under overhead combustible surfaces.
- For Installation on (or over) a level, stable, non-combustible surface only.
- This appliance is not for use in or on recreational vehicles and/or boats.

⚠ DANGER:

NEVER USE TONGA TORCH UNDER TREES, ROOFING, TARPS, CANOPIES OR UNDER ANY OVERHANGING STRUCTURE OR MATERIAL.

Never use this appliance as a heater.

Disconnect the gas cylinder when the appliance is not in use.

Indoor storage of this appliance is permissible only if the cylinder is disconnected and removed from the appliance.

Cylinders must be stored outdoors in a well-ventilated area out of the reach of children.

Disconnected cylinders must have threaded valve plugs tightly installed and must not be stored in a building, garage or any other enclosed area.

The gas pressure regulator provided with this appliance must be used, and must be the same model as supplied with the unit.

Replacement parts and a list of such parts are available from FMI Brands Inc. through the contact information provided on the last page of this Manual.

⚠ WARNING:

Please ensure that all adults and children which use or are near a unit in use are aware of the hazard of high-surface temperatures present on the unit during use and should use caution and stay away to avoid burns or clothing ignition.

Carefully supervise young children in the area of this appliance. Clothing or other flammable materials should not be hung from the appliance or placed on or near the appliance. Any guard or other protective device removed for servicing the appliance must be replaced prior to operating the appliance.

Installation and repair should be done by a qualified service person. The appliance should be inspected before use and at least annually by a qualified service person. More frequent cleaning may be required as necessary. It is imperative that control compartment, burners and circulating air passageways of the appliance be kept clean.

Owner & Safety Manual

OUTLAND LIVING™
PORTABLE PROPANE TONGA TORCH

SUPPLIED PARTS & HARDWARE LIST:

1. Tonga Torch Top with factory assembled low pressure gas hose and regulator
2. Tonga Torch Base
3. 1lb Propane Cylinder Holder
4. M5 Screws(2x)

ASSEMBLY

Required Tools (Not Supplied):

- Cross (Philips) Screw Driver

Mount the 1 lb LP cylinder holder to the base tube using two M5 screws.

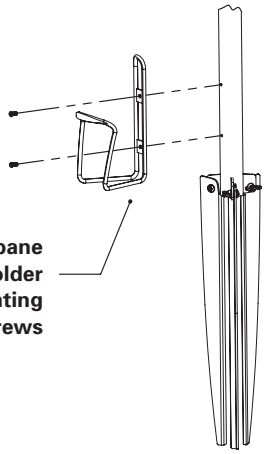

LP CYLINDER (not included):

All LP cylinders to be used with this appliance must be:

a. Only a 16 oz. / 453 g (1 lb.) LP (propane) gas cylinder is to be used with this appliance, approximately 8" (20 cm) high & 3.9" (10 cm) diameter, with CGA600 style gas regulator connection (1"-20UNF).

b. Only cylinders marked with "propane" shall be used.

c. Constructed and marked in accordance with the specifications for LP-gas cylinders of the U.S. Department of Transportation (DOT) or for Canada, Standard, CAN/CSA B339, Cylinders, Spheres and Tubes for the Transportation of Dangerous Goods.

d. Provided with a listed overfilling prevention device.

e. Provided with a cylinder connection device compatible with the connection for the appliance.

f. Always keep LP cylinders in upright position during use, transit or storage.

g. The use of an approved LP gas cylinder stabilizer, such as the one included, must be used when using this appliance in order to prevent the LP gas cylinder from tipping over.

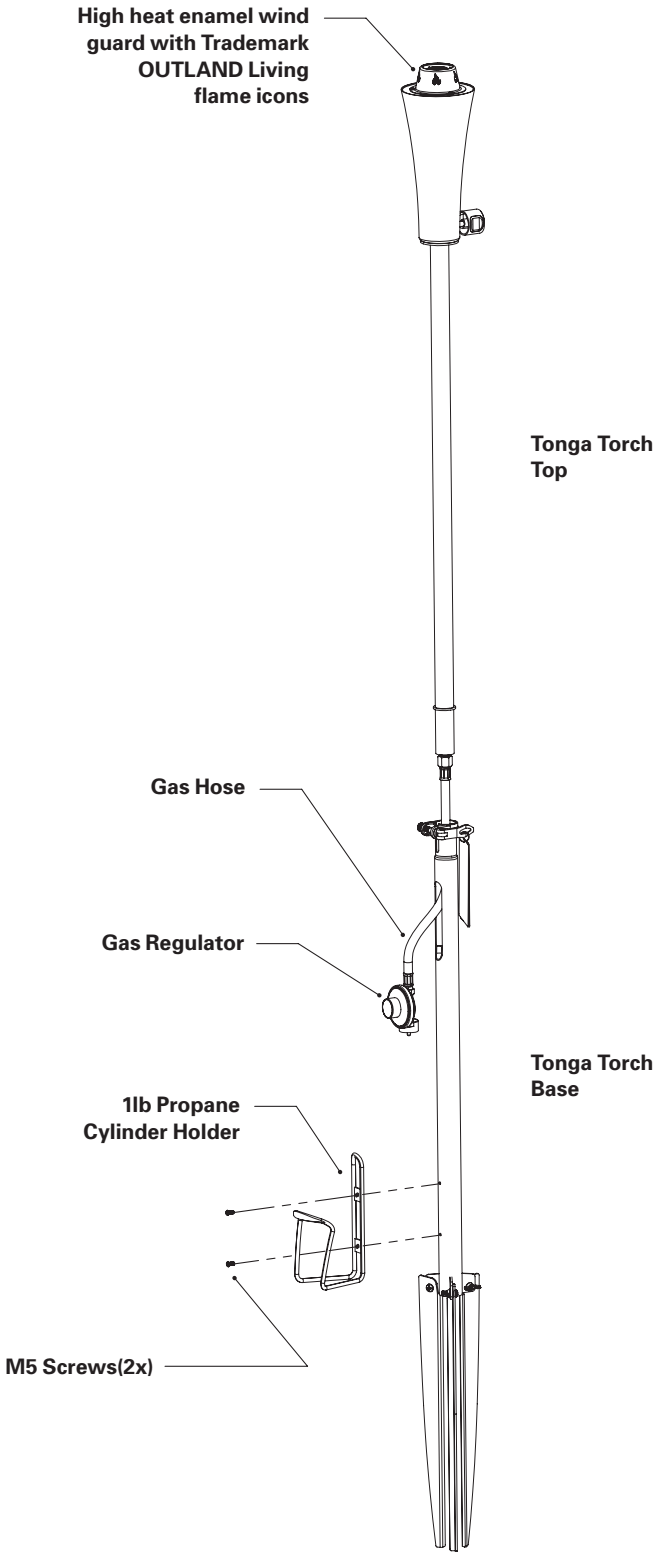

SECTION 1: SET UP

STEP 1
Insert Tonga Torch top into base tube.

STEP 2
Deploy legs. Stand the Tonga Torch straight. Tighten the wing nuts.

STEP 3
Unwind any twists or kinks in the gas hose. Ensure the hose is straight.

STEP 4
Lock down the tube collar clamp

Note: unwinding clamp counter clockwise will loosen clamp force; winding clamp clockwise tightens clamp force.

Important adjustment points:

a. Legs: Tighten the wing nuts. Always ensure the torch stands straight and the leg joints are firmly set.

b. Tube Collar Clamp: Always ensure the tube collar clamp is tightly locked in position.

⚠ IMPORTANT:

- Always ensure the Tonga Torch stands straight and vertical.
- The Tonga Torch is meant to be deployed on level ground. In the event of uneven ground adjust the fixed angle of the legs.
- It is recommended to use large flat rocks to level the appliance if the ground is very uneven.

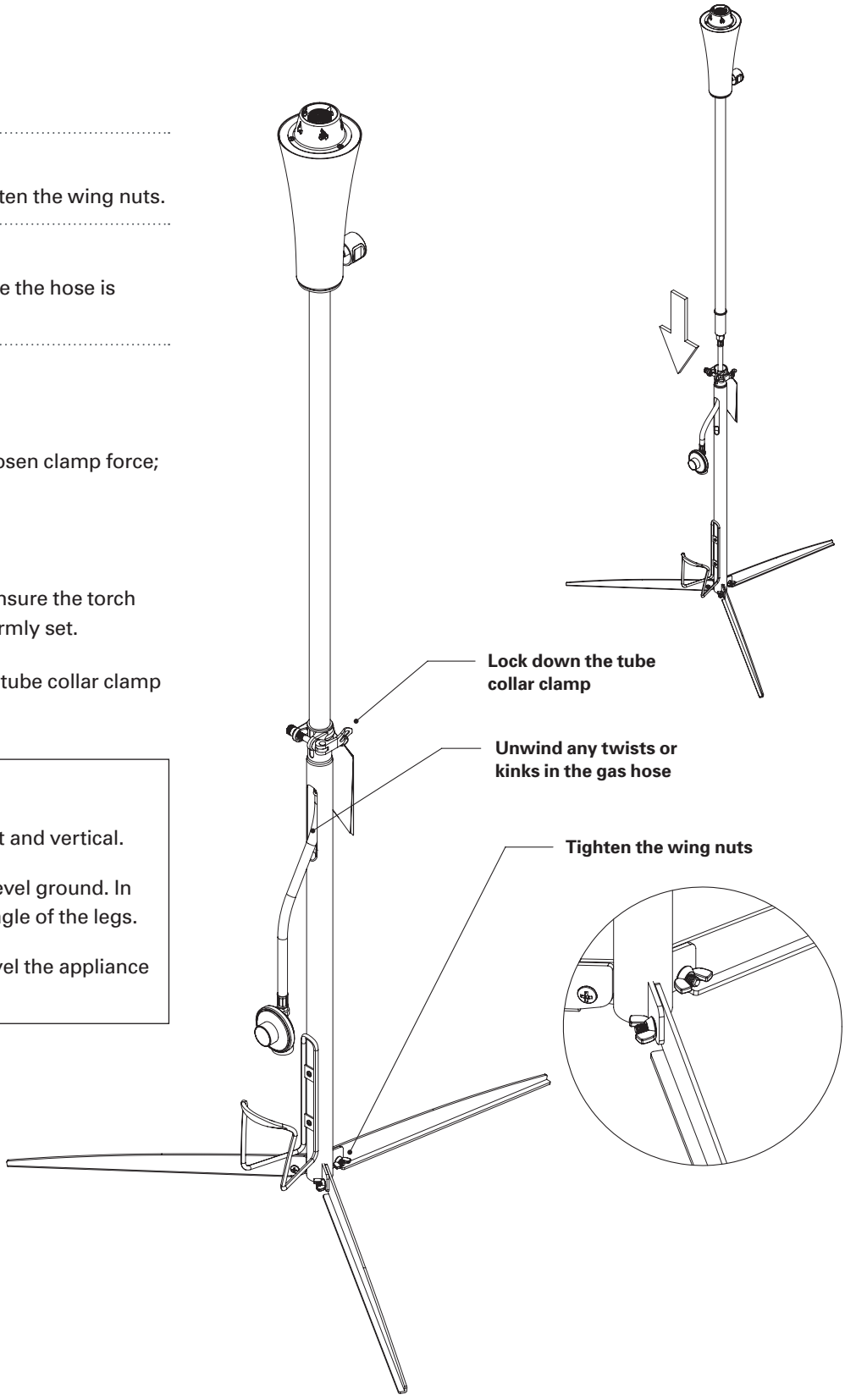

SECTION 2: APPLIANCE INSPECTION & TEST SEQUENCE

Each time the appliance is put to use, and prior to ignition, conduct the following appliance inspection and test sequence:

- Ensure all joints are firmly fastened and the appliance is standing straight.
- Inspect the hose prior to each use. The hose assembly must be replaced prior to the appliance being put into operation if there is evidence of excessive abrasion or wear, or if the hose is damaged. Contact FMI Brands Inc. should you require a replacement hose.
- Inspect the mid-point gas connection (sealed gas fitting) prior to each use. Check the fitting is firm and the seal is not broken or damaged. WARNING: Removal of the sealed gas fitting and/or seal is not permitted for safe operation and may affect warranty or claims.
- Inspect the burner prior to each use. Ensure all holes are clear and there are no leaves, pine needles, spider webs or other debris in burner area. Burner must be replaced prior to the appliance being put into operation if there is evidence of damage. Replacement parts such as burners are available from FMI Brands Inc.
- Ensure the proper gas connections are made. See section labelled “Connection”.
- Leak Test all connections. See section labelled “Leak Test”.
- Ensure that the LP gas cylinder and gas hose is placed in an area where it is unlikely to be tripped over (such as pathways or trails) or subject to other accidental damage.

SECTION 3: CONNECTION

⚠ CAUTION:

The 1lb LP cylinder does not have a shut off valve. As soon as the LP cylinder is connected to the gas regulator the gas will flow. Ensure the appliance gas valve is ‘OFF’ before connecting the LP cylinder!

1. Ensure the Tonga Torch gas valve is “off”.

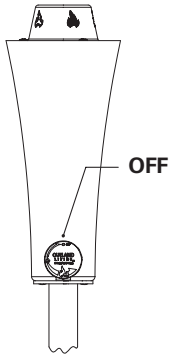

2. Connect the 1lb LP (Propane) cylinder.
   a) Engage threaded coupling connection to gas regulator.
   b) Turn LP cylinder clock-wise to connect.
   c) Do not use tools. **Hand tighten only**.

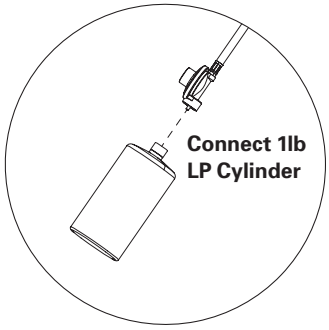

⚠ CAUTION:

When making the connection, hold the regulator in a straight line with the cylinder valve, so as not to cross thread the connection.

3. Unwind any twists or kinks in the gas hose. Ensure the hose is straight.
4. Slide the 1lb LP gas cylinder into cylinder holder.

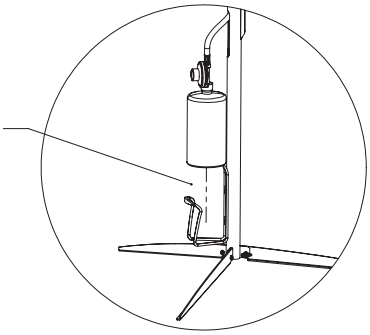

SECTION 4: LEAK TEST

⚠ WARNING:

DO NOT USE OR PERMIT SOURCES OF IGNITION IN THE AREA WHILE DOING THE LEAK TEST.
THIS INCLUDES SMOKING.

IMPORTANT: Leak testing should be done once per year or whenever the LP gas cylinder or any other gas system part is taken apart, serviced or replaced, whichever is more frequent.

1. Be sure the appliance valve is "off".
2. Ensure all gas system coupling joints are tight and properly attached.
3. Prepare a leak testing solution of half liquid detergent and half water.
4. Apply the solution to the LP gas delivery system at points as shown in illustration:

   • LP Cylinder Valve Coupling
   • Gas Hose Regulator
   • Mid-point gas connection (Sealed gas fitting)

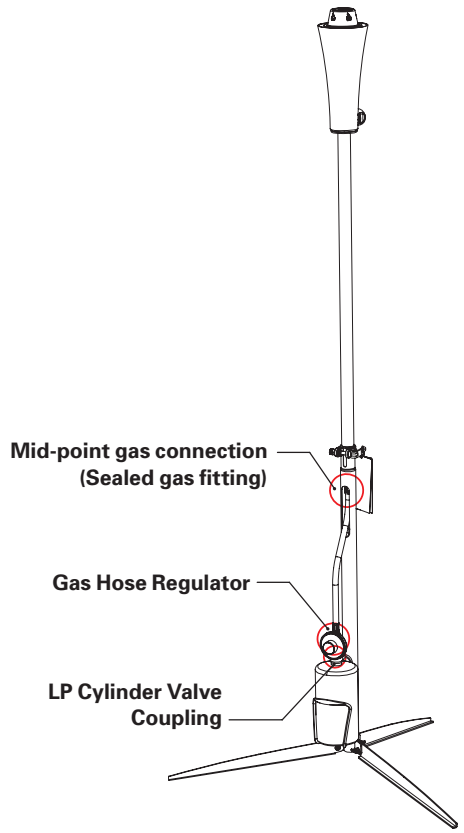

a) If parts of the fitting begin to produce bubbles, spray liquid, or if you smell liquid propane gas, immediately close the valve on the tank. Wait 5 minutes for any gas to dissipate. After waiting for 5 minutes, the leak(s) must be stopped by tightening the loose joints, if possible, or by replacing the faulty parts(s) with the part(s) recommended by the appliance manufacturer.

b) If no adverse reaction is observed and the connections all seem fine then move to the ignition sequence.

THE APPLIANCE IS NOT TO BE USED UNTIL ANY LEAK IS CORRECTED.

A gas appliance repairman or LP gas dealer should be called if attempts to stop the leak(s) are unsuccessful and, in such case, the LP gas supply must be shut off at the cylinder valve or the cylinder must be removed from the appliance until the leak(s) is corrected.

IMPORTANT: Call OUTLAND for quick delivery of replacement parts. **DO NOT RETURN THE APPLIANCE TO THE RETAILER.**

Installation and service must be performed by a qualified installer, service agency or the gas supplier.

STOP:

Do not return this product to the store.

If you need help or parts, call the Outland Hotline:
1-888-514-1663

Get help for:
Missing/damaged parts • Assembly • Troubleshooting
Warranty Assistance • Product Information

⚠ WARNING:

If the information in this manual is not followed exactly, a fire or explosion may result causing property damage, personal injury or loss of life.

NOTE TO INSTALLER:
Leave this guide with the consumer.

NOTE TO CONSUMER:
Please retain this guide for future use.

SECTION 5: IGNITION

STEP 1

Ensure that the appliance valve dial is in the "OFF" position by pushing and turning clockwise until the dial stops.

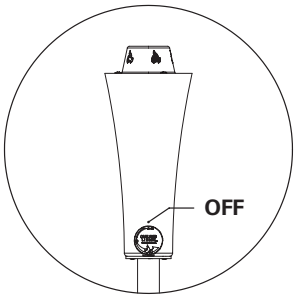

STEP 2

Securely attach regulator (large end of hose) to your propane cylinder. See section labeled "Connection".

STEP 3

Leak Test all connections. See section labelled "Leak Test".

STEP 4

Using a lighter or match, ignite lighter and hold flame slightly above the burner, then open the valve on the appliance slowly by turning (counter-clockwise) until the unit ignites.

STEP 5

Once the unit is burning normally set the dial to desired flame height.

TIP: You may find it convenient to place your foot on one of the legs to help stabilize the appliance during the ignition sequence.



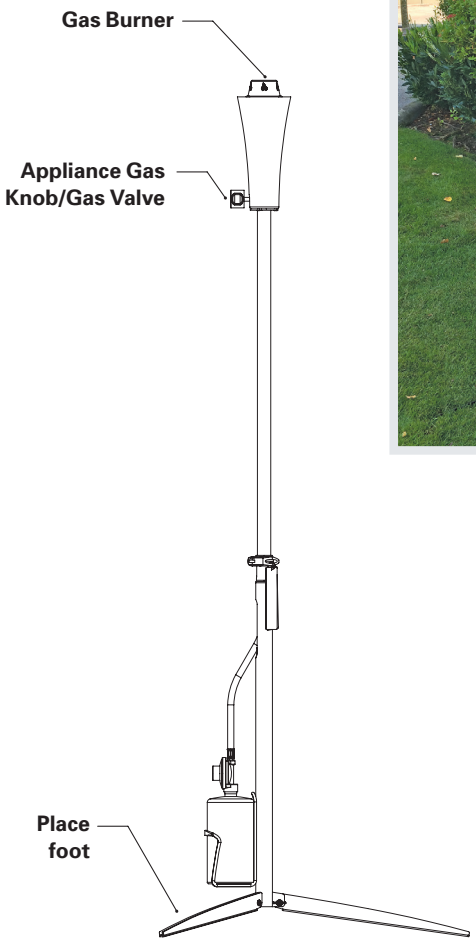

⚠ DANGER:

Keep hair tied back and keep head and face away from Tonga Torch during ignition!

⚠ WARNING:

Ensure that no parts of your body, clothing, or any other combustible material are above the burner before, during and after ignition.

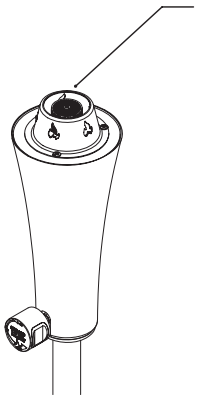

⚠ CAUTION:

Always ensure the burner area, burner screen and burner orifices are clear of all debris including spider webs.

STEP 6

GOT A LOW FLAME? OR FLAME HEIGHT DOES NOT APPEAR TO BE NORMALLY ADJUSTED BY THE GAS KNOB?

CORRECTIVE ACTION:

1. Confirm your propane tank is NOT empty ☺, then;
2. Close appliance gas knob valve "OFF".
3. Disconnect and reconnect the propane cylinder connection.
4. Perform Leak Test and follow Ignition sequence.

The whole story…

A low flame can be caused by an empty propane tank or if the Excess Flow Safety Valve (the EFV) has been tripped.

WHAT IS AN EXCESS FLOW VALVE? (EFV)

The EFV is a safety mechanism contained within the gas regulator. The purpose of the EFV is to restrict the gas supply if too much gas is flowing too quickly through the gas hose. For example this could happen if the gas hose was severed. It is normal that your EFV trips if you open the gas valve too quickly or if you leave the gas knob open before lighting, or both.

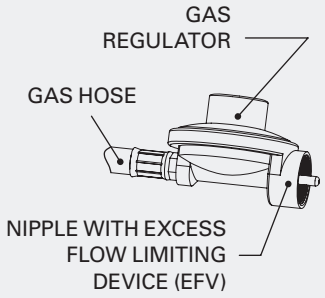

HOW TO PREVENT LOW FLAME OR EFV TRIPS

Always check that your Outland appliance gas valve/gas knob is closed before connecting the 1lb bottle of propane.

PLEASE DO NOT RETURN TO STORE – IT'S NOT BROKEN

Questions? Outland support team: **1.888.514.1663**

SECTION 6: PERIODIC INSPECTION OF BURNER FLAMES

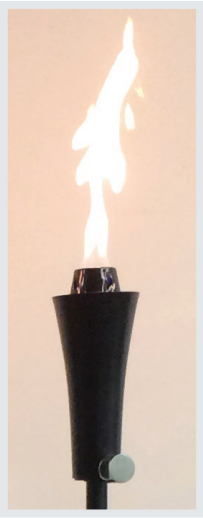

Upon igniting the appliance, visually verify that the burner is indeed burning as demonstrated in the image to the left. The presence of flames will confirm that the burner is burning.

Periodically check that the burner flame is present during operation by visually inspecting the burner to ensure the presence of flames.



If there are no flames present, as demonstrated in the image to the left, the appliance is likely not burning. If this is the case, IMMEDIATELY turn the valve to the "off" position if it is not already. Allow unit to cool for at least five (5) minutes before relighting. Repeat the ignition procedure (See section labelled "IGNITION").

SECTION 7: EXTINGUISHING THE APPLIANCE

STEP 1

1. Turn gas valve on appliance to "OFF" position.
2. Wait for flame to visibly extinguish.
3. Disconnect the cylinder when not in use.

STEP 2

Allow unit to cool for at least five (5) minutes before relighting.

⚠ WARNING NOTES:

- The portable propane Tonga Torch appliance is NOT a toy.
- Expected burn time: Your torch has a maximum power rating of 7,000 BTU / hr. You can expect a 3 - 3.5 hour burn time for your OUTLAND Tonga propane torch, assuming you start with a full 16 oz. / 453 g (1 lb.) LP propane cylinder (25,000 BTU capacity) and that you use it with the gas valve fully open. Using the torch with a lower flame intensity will increase the burning time.
- When using this unit, children should be supervised at all times, without exception.
- Do not place any objects inside the burner component.
- Do not add wood or any other materials to the fire. It is designed to safely combust propane only.
- Solid fuels shall not be burned in this appliance.
- Keep the appliance area clear and free from combustible materials, gasoline and other flammable vapors and liquids.
- Do not connect to a remote gas supply.
- Do not use this appliance if any part has been under water. Immediately call a qualified service technician to inspect the appliance and to replace any part of the control system and any gas control which has been under water.
- Always inspect and clear all valve and gas orifices of any foreign debris including spider webs prior to lighting.

IMPORTANT: Only use the base provided.

- Appliance accessories and parts can be purchased at www.outlandliving.com or by calling 888-514-1663.
- Replacement parts:
  - FMTT-103 Low pressure gas hose and regulator

SECTION 8: APPLIANCE MAINTENANCE

Your Outland appliance requires periodic maintenance to keep it in good running order. Follow the steps below to ensure your appliance will provide you with the best possible performance:

1 Keep your appliance out of the rain and store it in a dry place.

2 If you experience any signs of your propane cylinder 'freezing off' or start to experience lower flames than usual, please simply turn the burner control setting to low for 5–10 minutes, or replace the cylinder with a full one.

3 Ensure that you clean the top of your Outland appliance after every use to keep it looking GREAT. Simply use warm soap water to wipe down your appliance to keep it clean. Do not use abrasive cleaners.

4. Should any part of this appliance (including the burner) become soiled or dirty, wipe lightly with a damp cloth. Do not use flammable or corrosive cleaning products on or near this unit.

5 Periodically clean the burner orifice holes out with a small pin.
   a. Remove top screw
   b. Remove Burner Screen
   c. Locate burner
   d. Clean burner and burner screen orifice holes with small pin or paperclip.

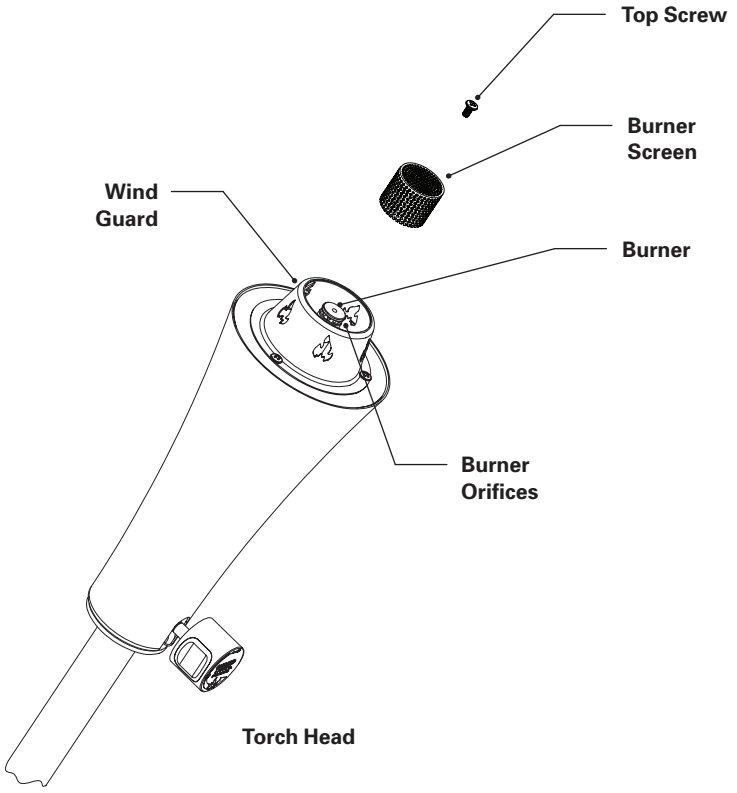

SECTION 9: APPLIANCE DIMENSIONS (Approximate)

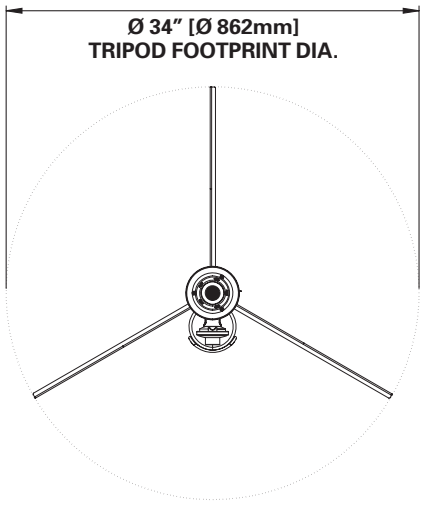

TOP

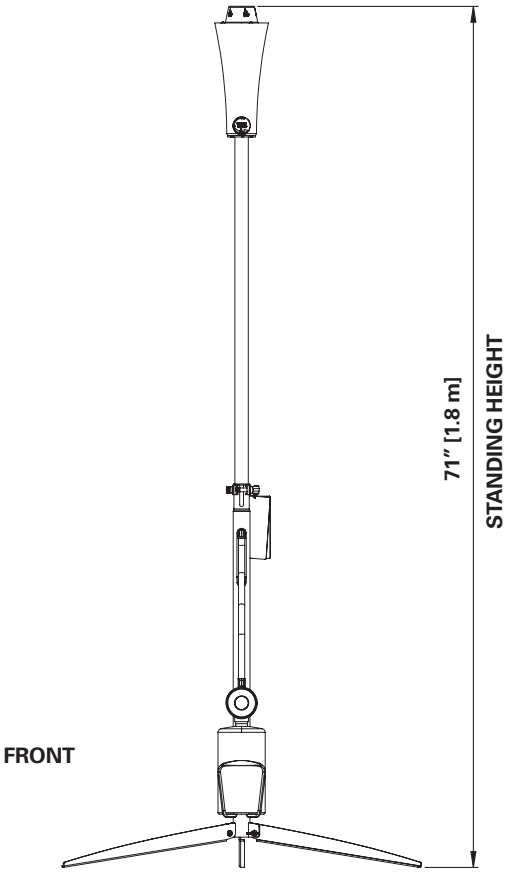

FRONT

OUTLAND LIVING™
PORTABLE PROPANE TONGA TORCH

Owner & Safety Manual

1 YEAR LIMITED WARRANTY

Customers in Canada and USA

All components are warranted by the manufacturer for a period of 1 year after date of purchase by the original owner against defects in materials and workmanship under normal use. This warranty does NOT cover normal wear and weathering, assembly and/or maintenance OR use in a commercial application. At FMI Brands' sole discretion, products under warranty will be repaired and/or replaced at no charge to the customer. Any returns sent back to FMI Brands must be sent via prepaid freight and in the original retail packaging.

Please register your OUTLAND Living product for proof of purchase and warranty at

http://outlandliving.com/register-products/

For more warranty information and details please contact FMI Brands Inc. at info@outlandliving.com

STOP:

Do not return this product to the store.

If you need help or parts, call the Outland Hotline: **1-888-514-1663**

Get help for:

Missing/damaged parts • Assembly • Troubleshooting • Warranty Assistance • Product Information

FOR REPLACEMENT PARTS AND ACCESSORIES PLEASE VISIT WWW.OUTLANDLIVING.COM

The owner's manual is available as a free download from **www.outlandliving.com**

Should you have any questions or comments regarding this appliance, please do not hesitate to contact FMI Brands Inc. at **(888) 514-1663** or E-Mail to **info@outlandliving.com**.

OUTLAND LIVING | the OUTLAND flame | Outdoor Living Perfected | are registered trademarks of FMI Brands Inc.