ORANGE



O Turntable User Manual

1.1 Your user manual

Please be sure to carefully read this manual before using this product. This ensures that you are getting the most out of your product.

1.2 Important information

Service

With the unit disconnected from the mains, clean only with a microfibre cloth (lightly damp if necessary). Do not remove any coverings; there are no user serviceable parts inside. If the unit performs erratically or emits smoke or odour, disconnect from the power supply and take it to a qualified service technician.

Warranty

Every product we make is designed and assembled in the UK to the highest possible standard. This warranty covers confirmed manufacturing defects. This warranty does not cover wear and tear, or parts that are considered consumable. Any unauthorised modifications or failure to follow the Orange recommended guidelines in the product manual may invalidate the warranty. Due to local laws, warranties may vary by country in which units are sold. Please contact your Orange retailer or distributor for warranty details. Your statutory rights are not affected. Please do not dispose of the product packaging. The original packaging must be used if returning a product to your dealer or distributor for inspection or repair.

Please visit the homepage of **www.orangeesentials.co.uk** for further warranty details.

Safety Instructions

Do not use this unit near liquids or expose to moisture. Do not use near sources of heat such as radiators, vents, stoves, or candles. Ensure adequate ventilation around the product, at least 10cm in all directions, and avoid placing the unit on soft surfaces such as long carpet and fabric. Do not open the product enclosure or force objects into openings in the unit. Place the unit on a fixed level surface where it will not fall or tip. The unit should only be used in moderate climates between 5°C (41°F) and 35°C (95°F). Keep packaging material and small pieces out of reach of children. Unplug the power supply if the unit is unused for extended periods of time.

1.3 Compliance information

This symbol indicates that the electronic equipment bearing it should not be disposed of as general household waste at the end of its life. The equipment should be disposed of at a collection point for waste electrical and electronic equipment in accordance with national legislation and Directive 2012/19/EU. For more information about how to dispose of your waste electronic equipment, please contact your local authority or retailer where you purchased the product. In the UK, please return your product to the retailer.



1.4 CE Mark

This symbol indicates that this product complies with the relevant European Directives.

CE

1.5 UKCA Mark

This symbol indicates that this product complies with the UK conformity safety requirements.

UK CA

2. Setting up your Orange O Turntable

1. Carefully unpack the turntable, always keeping it upright.
2. Check the belt is fitted around the drive pulley **(A)** and sub-platter **(B)**.
3. Remove the packing card **(C)** from beneath the sub-platter **(B)** and fi t the platter **(1)** and mat.
4. Push the balance weight **(4)** fully onto the rear of the tonearm **(3)** until it reaches the stop point as shown **(D)**.
5. Connect the phono output to an appropriate line level input.
6. Connect the power supply to the rear of the turntable.
7. Carefully remove the stylus guard from the cartridge **(2)**.
8. Turn on the O Turntable via the on/off switch located on the underside of the plinth **(5)**.
9. Change the speed by moving the drive belt from the $33^{1/3}$ and 45 steps of the pulley **(A)**.
10. The O tonearm **(3)** is pre-set for bias adjustment, no other set-up is required.

3. Built-in phono stage

The built-in phono stage is a high specification pre-amplifier. It is designed to amplify the signal from a moving magnet cartridge to a suitable level for all line level inputs of an appropriate system or audio amplifier. This allows simple connection to a wide variety of products using either the standard twin phono to phono lead **(supplied)** or phono to 3.5mm plug **(not supplied)**.

Note: A 3.5mm to phono lead must only be plugged into an appropriate input.

DO NOT CONNECT TO A HEADPHONE OUTPUT SOCKET (as found on a mobile device or similar), as this could damage both the device and player.

4. Output connections

Connect the output sockets of the built-in phono stage to a suitable ‘Line Level’ input on your amplifier using the appropriate phono leads.

IMPORTANT: Many amplifiers have a built-in phono stage. Never connect the O Turntable to an integrated phono stage. These are usually marked ‘Phono’ or ‘Disk’ input.

IMPORTANT: Please turn down the volume on the amplifier before switching the unit on or off.

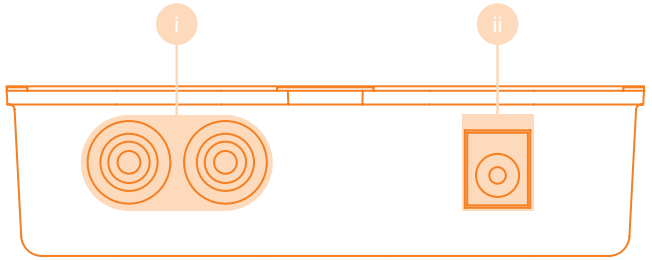

i. Output connections
ii. Power connection

Note: Some amplifiers and all in one systems offer adjustable gain settings. If this option is available, we recommend that the connection used for the turntable is set to the lowest gain setting to avoid any unnecessary background noise.

Note: When switching the O Turntable on or off, a noise may be heard through the speakers. This is the phono stage powering up momentarily after the turntable. This is perfectly normal.

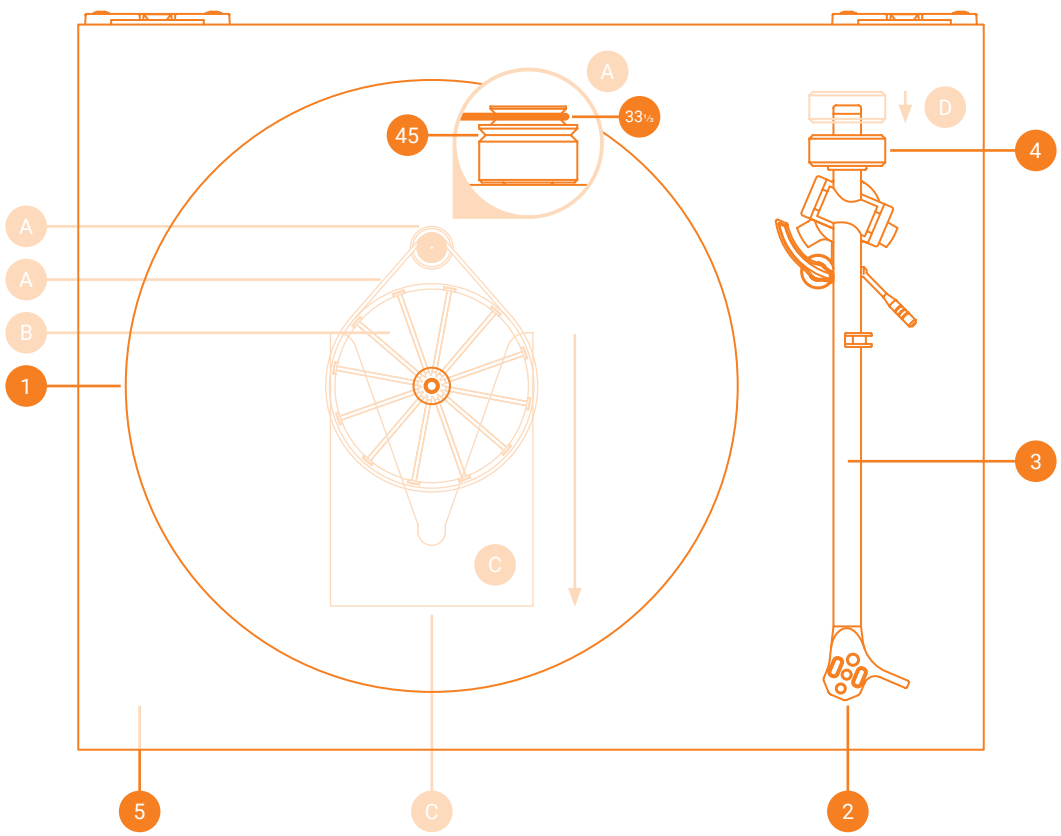
A
45
33⅓
A
A
B
1
C
D
4
3
5
C
2

5. Output connections

As with any turntable, take care when positioning. Always place it on a firm level surface. Never place the turntable on the same surface as desktop or bookshelf loudspeakers as the energy created by the loudspeakers can distort the music and affect performance. To optimise performance, the turntable should be mounted on a hi-fi rack.

6. Power connection

Plug in the Orange O Turntable 350mA power supply into the wall socket. Set-up is now complete. Simply switch on, sit back and enjoy!

WARNING: Only use the supplied mains adaptors with this product.

7.1 O Turntable specifications

Maximum output level (3.54cm/s RMS 45°CBS STR100 band 6a and 7a)	370-410mV
Output impedance	1kΩ
Frequency response (pre-amplifier only)	14Hz (-3dB Point) to 100kHz (-0.6dB Point)
RIAA accuracy (pre-amplifier only)	(100Hz to 20kHz) ±0.4dB typically better than ±0.25dB
Pre-amplifier gain	40dB
Pre-amplifier input loading	47kΩ in parallel with 220pF
Signal to noise ratio	-75dB A-weighted ref maximum output
Power requirements	50Hz 24V AC 0.142mA 3.4W / 60Hz 24V AC 0.129mA 3.1W

7.2 Mains specifications

UK	
Input	230V AC 50Hz 0.07 A
Output	24V AC 350mA AC

EU	
Input	230V AC 50Hz
Output	24V AC 350mA AC

USA	
Input	115V AC 60Hz
Output	24V AC 350mA AC

ORANGE®

OMEC Consumer Products Ltd., Unit 2 Abbeymead Industrial Estate, Brooker Road, Waltham Abbey EN9 1HU

Orange O Turntable User Manual I Version 1