MERACH

MODEL: MR-P16

USER MANUAL

MERACH SMITH MACHINE

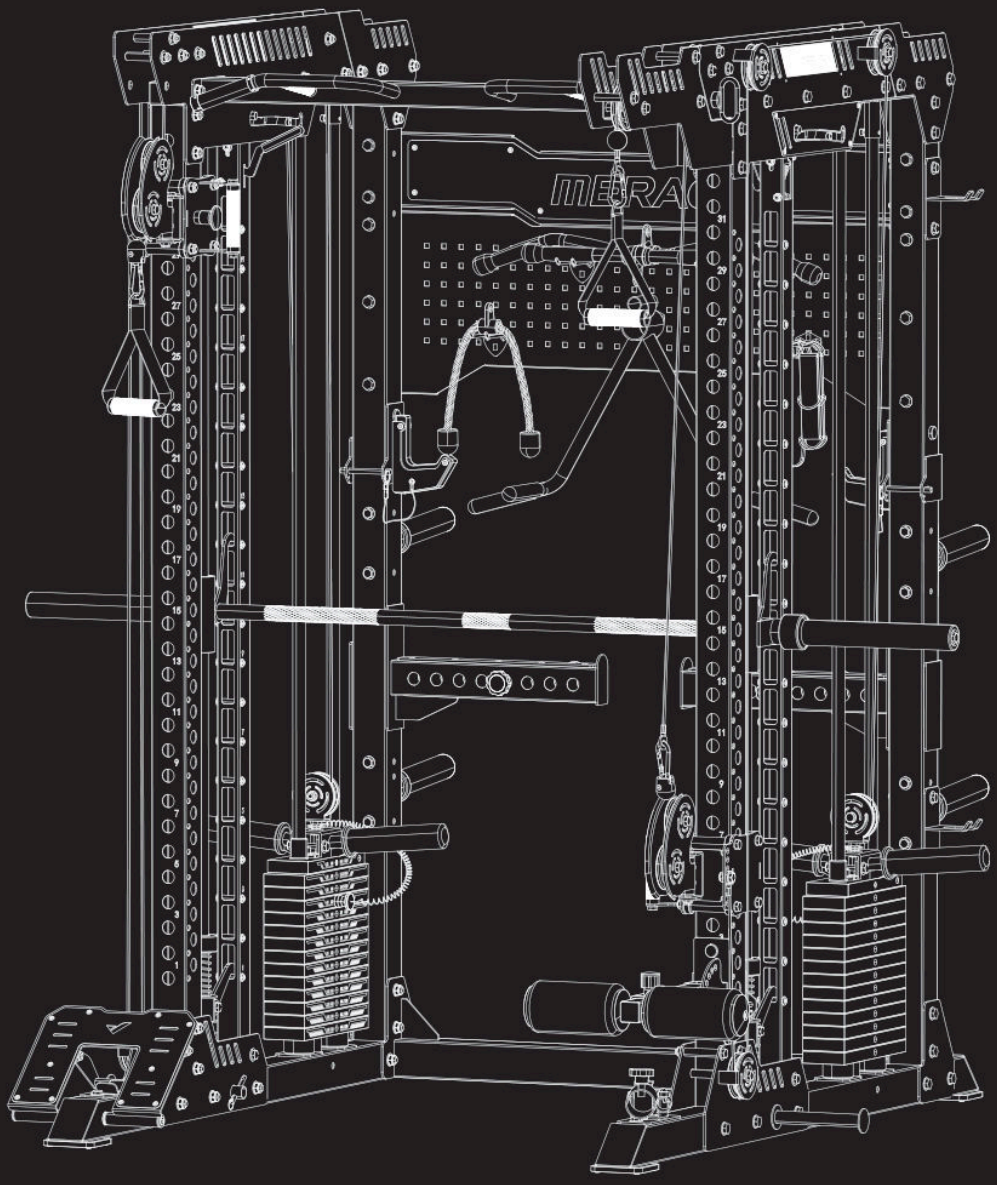

Questions or Concerns?

IMPORTANT!

Please read all details before use, and keep this user manual for future reference.

PLEASE FEEL FREE TO CONTACT US: ***support@merach.com***

Phone: +1 (833) 529-6620 Mon-Fri 8am-5pm (PST) US/CA

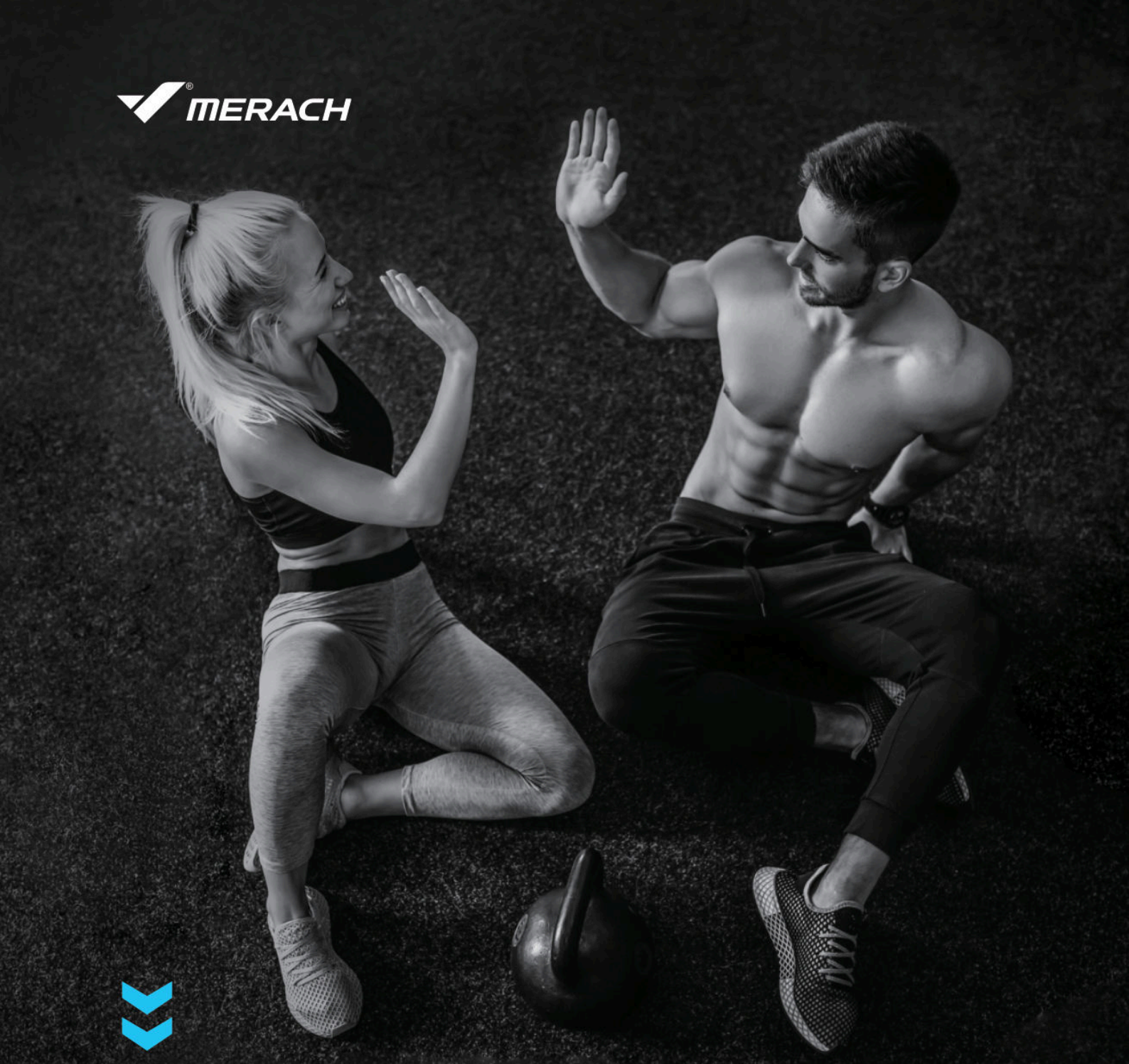

WHO WE ARE

Our customers aren't just important; their health, fitness, and pure enjoyment for life is at the core of everything we do at MERACH. From innovative fitness research and cutting-edge product development, to our exceptional purchasing & after-sales service, we are our customers' life-long partner in crafting a better fitness future.

Through quality fat-burning & muscle-building fitness equipment such as our quality rowing machines and exercise bikes, plus our innovative MERACH APP, and digital courses, we give the opportunity and support to all to pursue their health and fitness goals and discover a new way of healthy living.

Welcome to MERACH

THANK YOU FOR YOUR PURCHASE!

(We hope you love your new product as much as we do.)



Explore

Explore Fitness Articles
merachfit.com/blogs/courses



Enjoy

Enjoy weekly, featured courses
made exclusively by our in-house fitness instructor



Train

Unlock unlimited guided classes and never train alone again with **MERACH**.

WARRANTY REGISTRATION

Please register your warranty to keep yourself protected !



Email your item model to
register@merach.com

If you purchased the product from an authorized distributor, please contact them directly to register for the warranty.

SELF-SERVICE CUSTOMER SUPPORT FAQ

1. The outer package was broken, which makes me worried that the product may be damaged.

Please contact us via the after-sales email in time.

2. This was the first time I bought your product, is there a user manual?

A detailed user manual is included in the package and you can also watch the installation video by scanning the QR code on the manual.

3. I just received the parcel today, but it doesn't come with accessories.

You'll get twice the price refund of the accessories if the missing accessories don't affect your user experience. Or you can contact us via the after-sales email service.

4. Where can I get your latest product information and related promotions?

Search our products on Official Website or visit our ***Facebook, Twitter, TikTok, Instagram@merachfit***, and also you can send us the product list you're interested in and ask if there is any discount.

Contact us by ***support@merach.com***

CONTENTS

Safety Instructions 01
Product Information 02
Package List 03
Parts List for the Steps 08
Parts Tool List 12
Installation Guide 14
Adjustment Instructions 47
Accessory storage instructions 49
Warm-up 50
Warranty Information 51



Please read the entire manual carefully before installing and using the machine, and save it for further use.

SAFETY INSTRUCTIONS

Please keep this manual in a safe place for future reference.

- Before using this product, please always read this manual carefully.
- Children, the elderly, or individuals with physical disabilities should use the product under the supervision of a guardian and in accordance with a doctor's advice.
- Use with caution if you have old injuries to the waist, elbows, shoulders, or other joints and muscles.
- Do not expose the equipment to damp places, which may cause equipment malfunction.
- Please confirm that all parts are not loose, detached, damaged, or cracked before each use. If there is any damage, do not use it.
- Check the surrounding environment before use, and it is recommended that the unobstructed space be 4x4m.
- Please avoid ground cracks, slippery ground and uneven areas when using.
- The Company shall not be responsible for personal injury or property damage caused by improper use of the product.
- This equipment is a non-competitive equipment, limited to fitness exercise, beyond the scope of use will cause physical injury.
- Before the use, you should do a warm-up exercise, please take exercise with your own condition, strengthen the exercise load step by step, if you have any discomfort, please stop practicing.
- The equipment can only be used for the intended purpose described by the manufacturer, do not modify the equipment or use accessories not recommended by the manufacturer.
- The height of the adjustable stop should not be lower than 710mm during squat exercises.
- Maximum load capacity: 2000lbs/907kg.
- Maximum user weight not exceeding 330lbs/150kg.
- The Smith bar is rated for a maximum dynamic load of 400lbs/180kg.
- DO NOT exceed the stated maximum training load or maximum user weight.
- WARNING: CHOKING HAZARD—Small parts. Not for children under 3 yrs.

SPECIFICATION

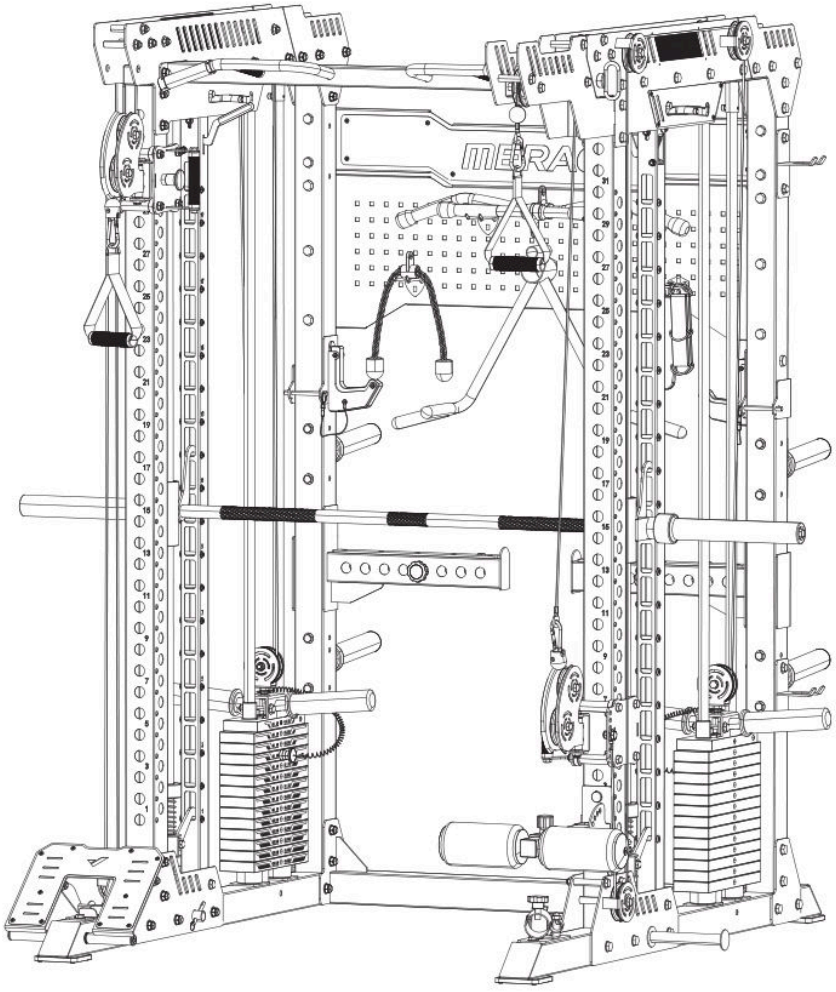

Name:	MERACH SMITH MACHINE
Model:	MR-P16
Material:	Alloy Steel
Product Dimensions:	78.7*69.4*85.1inch/2000*1763*2161mm
N.W.:	811.3lbs/368kg
Max Load:	2000lbs/907kg

PACKING LIST

Please check your package against the package list below or the contents list. If any parts are missing, please contact us.

Note: Installation requires multiple people. Use tall helpers, or use a sturdy ladder, step stool, or other stable platform as needed.

BOX 1			
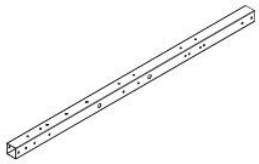 #E Rear pillar tube 2PCS	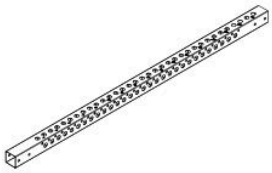 #Q Front pillar tube 2PCS	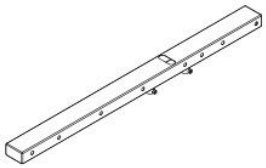 #S Ridgepole 2PCS	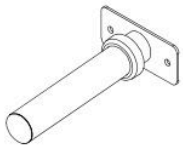 #AF Dumbbell Plate Storage Tube 4PCS

BOX 2			
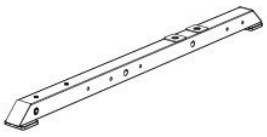 #B Left Bottom Tube 1PC	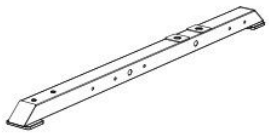 #C Right Bottom Tube 1PC	 #I Left Neutral Pillar Tube 1PC	 #J Right Neutral Pillar Tube 1PC
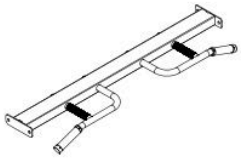 #Z Pull-up bar 1PC			

BOX 3			
 #K Olympic Barbell 1PC	 #L O-bar Lifting Sliding Sleeve 2PCS	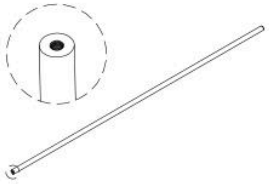 #M Guide Pillar 2PCS	 #T Guide Rod 4PCS
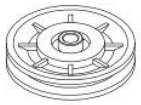 #AB Pulley 10PCS	 #AZ Double-ended Rope 1PC	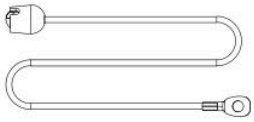 #AM Long Steel Wire Rope 2PCS	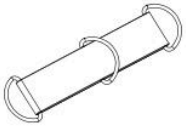 #BC Handle Extension Strap 2PCS
 #BD Ankle Cuff 2PCS			

BOX 4			
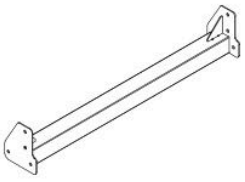 #A Bottom Connecting Pipe 1PC	 #D Connecting Pipe Fixing Plate 2PCS (bundled at #A ends)	 #N Olympic Barbell Collar 2PCS	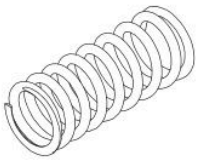 #O Compression Spring 2PCS
 #P Cushion pad 6PCS	 #Y Middle pillar bushing 4PCS	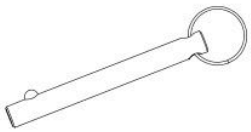 #AV Pin with ring 2PCS	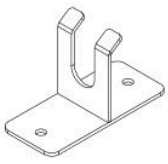 #AC Barbell holder 2PCS

BOX 4			
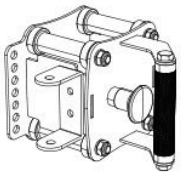 #AG Pulley Adjustment Assembly 2PCS	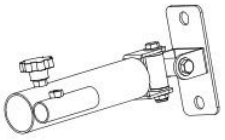 #AL Rotary Tube Assembly 1PC	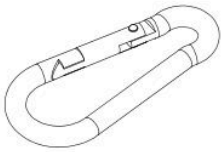 #AN Gourd hook 4PCS	 #AO Strap Pull Handle 2PCS
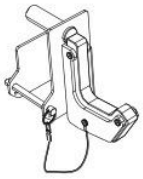 #AP Left hook assembly 1PC	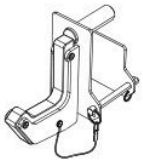 #AQ Right hook assembly 1PC	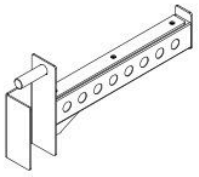 #AR Left horizontal branch pipe 1PC	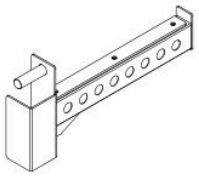 #AS Right horizontal branch pipe 1PC
 #AT Handle tube 2PCS	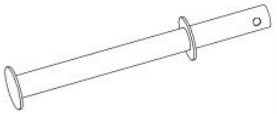 #AU Elastic Band Fixing Tube 2PCS		

BOX 5			
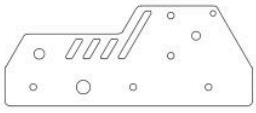 #H Connecting piece ② 2PCS	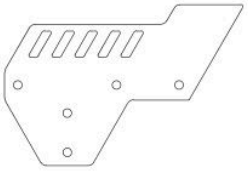 #R Connecting piece ⑤ 4PCS	 #V Left connecting piece ③ 1PC	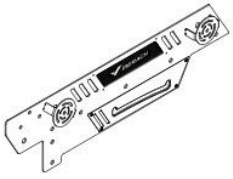 #W Right connecting piece ③ 1PC
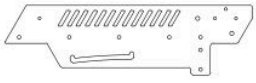 #X Connecting piece ④ 2PCS	 #AD Logo plate 1PC	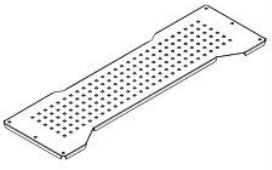 #AE Perforated board 1PC	

BOX 6			
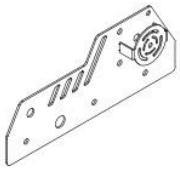 #F Left connecting piece ① 1PC	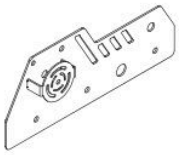 #G Right connecting piece ① 1PC	 #U Pulley Fixed U-Set 2PCS	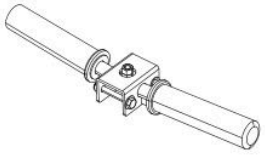 #AH Load-bearing Pipe Assembly 2PCS
 #AI 72 Tube Sleeve Set 2PCS	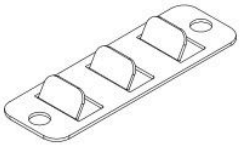 #AJ Pedal Adjustment Plate 1PC	 #AK Left Foot pedal 1PC	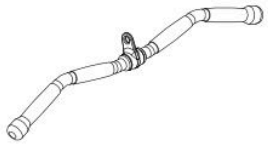 #AW High Pull Bar 1PC
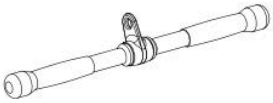 #AX Low Pull Bar 1PC	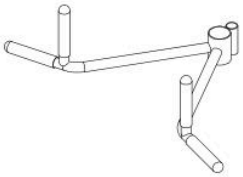 #AY Landmine V-Handle 1PC	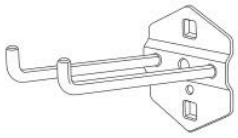 #BE Pegboard Hook 8PCS	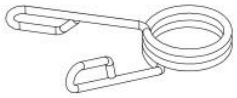 #BF Φ50 Butterfly Clip 6PCS
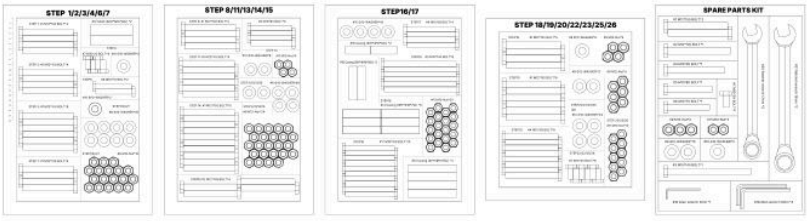 #Screw package (Includes spare parts kit)			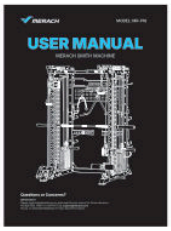 #User Manual

BOX 7			
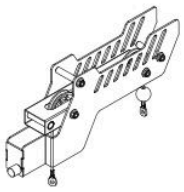 #BG High Pull-down Tube Assembly 1PC	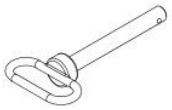 #BH Latch Pin 1PC	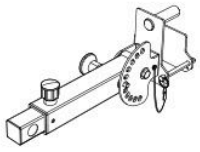 #BI Leg Press Pipe Assembly 1PC	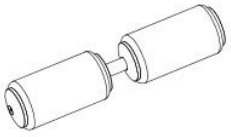 #BJ Foam Pipe Assembly 1PC
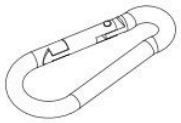 #AN Gourd hook 1PC			

BOX 8	BOX 9	BOX 10
 #BK Weight Stack 9PCS	 #BK Weight Stack 9PCS	 #BK Weight Stack 8PCS

BOX 11			
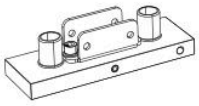 #BL First Counter Weight Stack 2PCS	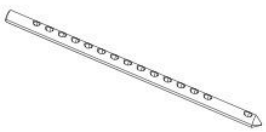 #BM Weight Selector Rod 2PCS	 #BN Dowel Pin 2PCS	 #BO Captive Pin 2PCS
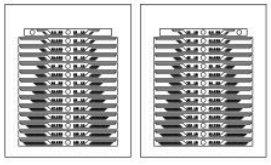 #BP Weight Stack Sticker 2PCS			

PARTS LIST FOR THE STEPS

Please install the exercise mat before installing the Smith machine.
After installing the exercise mat and confirming that all parts are complete, you can prepare the necessary parts for each step in advance according to this list.

STEP 1

in box 4 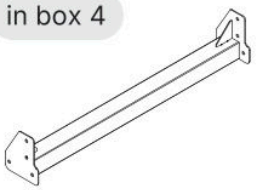 #A Bottom Connecting Pipe 1PC	in box 2 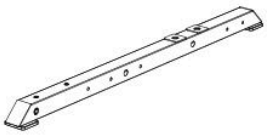 #B Left Bottom Tube 1PC	in box 2 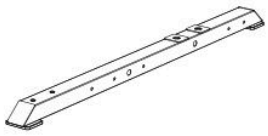 #C Right Bottom Tube 1PC	in box 4 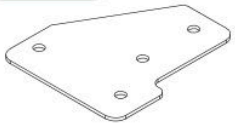 #D Connecting Pipe Fixing Plate 2PCS (bundled at #A ends)

STEP 2

in box 1 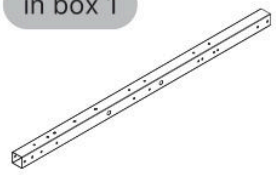

#E Rear pillar tube 2PCS

STEP 3

in box 6 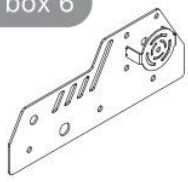 #F Left connecting piece ① 1PC	in box 6 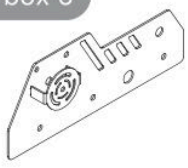 #G Right connecting piece ① 1PC	in box 5 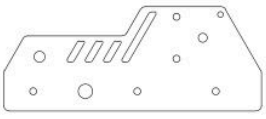 #H Connecting piece ② 2PCS

STEP 4

in box 2 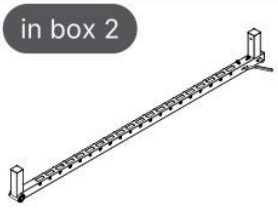 #I Left Neutral Pillar Tube 1PC	in box 2 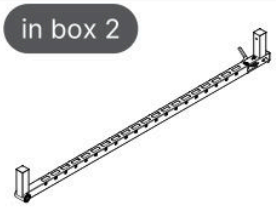 #J Right Neutral Pillar Tube 1PC

STEP 5

in box 3 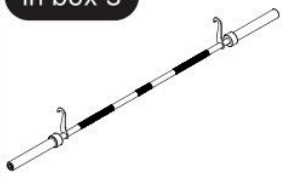 #K Olympic Barbell 1PC	in box 3  #L O-bar Lifting Sliding Sleeve 2PCS

STEP 5

in box 3 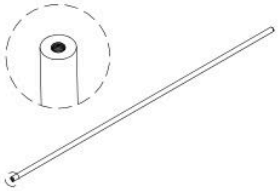 #M Guide Pillar 2PCS	in box 4  #N Olympic Barbell Collar 2PCS	in box 4  #O Compression Spring 2PCS	in box 4  #P Cushion pad 2PCS

STEP 7

in box 1



#Q Front pillar tube 2PCS

STEP 8

in box 4

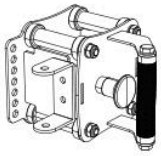

#AG Pulley Adjustment Assembly 2PCS

in box 5

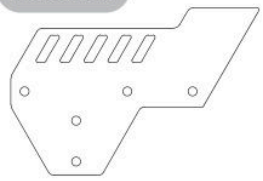

#R Connecting piece ⑤ 4PCS

STEP 9

in box 3



#T Guide Rod 4PCS

STEP 9

in box 4



#P Cushion Pad 4PCS

in box 8/9/10

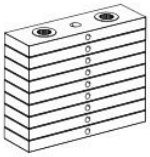

#BK Weight Stack 26PCS

STEP 10

in box 1

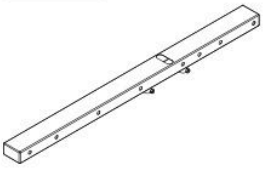

#S Ridgepole 2PCS

in box 11

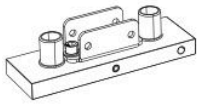

#BL First Counter Weight Stack 2PCS

STEP 10

in box 11



#BN Dowel Pin 2PCS

in box 11



#BM Weight Selector Rod 2PCS

STEP 12

in box 11

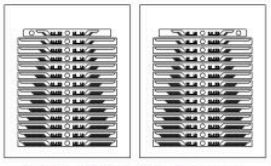

#BP Weight Stack Sticker 2PCS

STEP 13

in box 6



#U Pulley Fixed U-Set 2PCS

in box 6

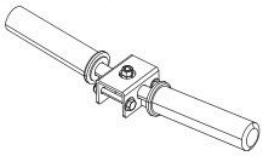

#AH Load-bearing Pipe Assembly 2PCS

in box 11



#BO Captive Pin 2PCS

STEP 14

in box 5

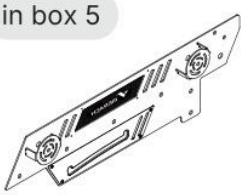

#V Left connecting piece ③ 1PC

in box 5

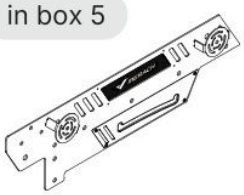

#W Rightconnecting piece ③ 1PC

in box 5

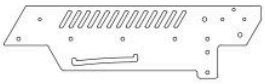

#X Connecting piece ④ 2PCS

in box 4

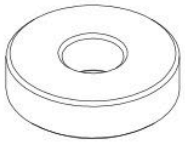

#Y Middle pillar bushing 4PCS

STEP 15

in box 2

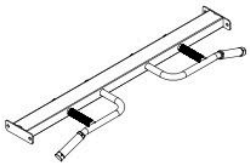

#Z Pull-up bar 1PC

STEP 16

in box 3



#AB Pulley 10PCS

STEP 17

in box 4

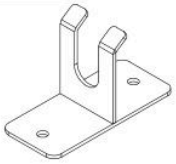

#AC Barbell holder 2PCS

STEP 18

in box 5



#AD Logo plate 1PC

STEP 19

in box 5

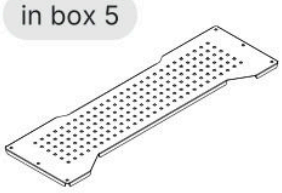

#AE Perforated board 1PC

STEP 20

in box 1

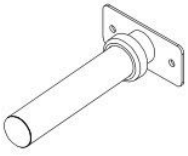

#AF Dumbbell Plate Storage Tube 4PCS

STEP 21

in box 6



#AI 72 Tube Sleeve Set 2PCS

STEP 22

in box 3

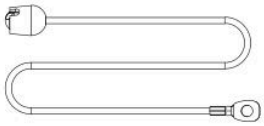

#AM Long Steel Wire Rope 2PCS

STEP 24

in box 4

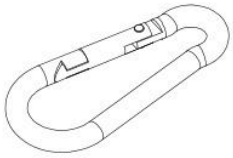

#AN Gourd hook 4PCS

in box 4

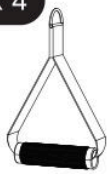

#AO Strap Pull Handle 2PCS

STEP 25

in box 6

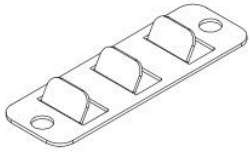

#AJ Pedal Adjustment Plate 1PC

in box 6



#AK Left Foot pedal 1PC

STEP 26
in box 4 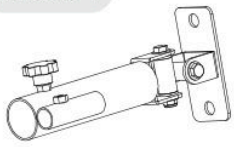 #AL Rotary Tube Assembly 1PC

STEP 27		
in box 4  #AP Left hook assembly 1PC	in box 4  #AQ Right hook assembly 1PC	in box 4 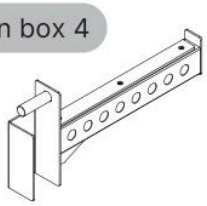 #AR Left horizontal branch pipe 1PC

STEP 27
in box 4 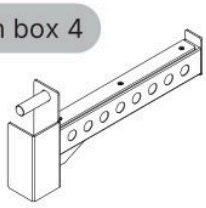 #AS Right horizontal branch pipe 1PC

STEP 28
in box 4  #AT Handle tube 2PCS

STEP 29	
in box 4 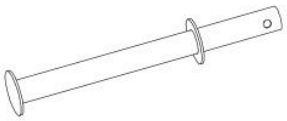 #AU Elastic Band Fixing Tube 2PCS	in box 4 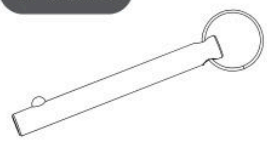 #AV Pin with ring 2PCS

STEP 30			
in box 6 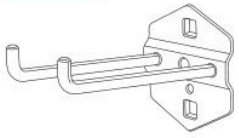 #BE Pegboard Hook 8PCS	in box 6 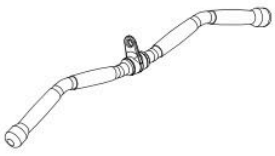 #AW High Pull Bar 1PC	in box 6 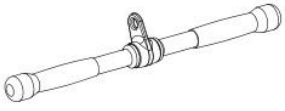 #AX Low Pull Bar 1PC	in box 6 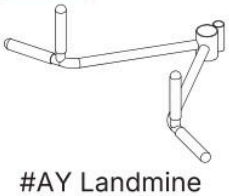 #AY Landmine V-Handle 1PC

STEP 30		
in box 3  #AZ Double-ended Rope 1PC	in box 3 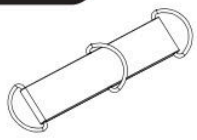 #BC Handle Extension Strap 2PCS	in box 3  #BD Ankle Cuff 2PCS

If you purchased the High Pull-down Tube Assembly (BG) and Leg Press Pipe Assembly (BI), please refer to the instruction manual in box 7 after completing the installation of boxes 1-6. If not, please ignore this note.

PARTS TOOL LIST

Check if all parts and accessories are in the package.

 #1 Hexagon Bolt M12*100 48PCS	 #2 Hexagon Bolt M12*105 4PCS	 #3 Hexagon Bolt M10*140 6PCS	 #4 Hexagon Bolt M10*95 12PCS
 #5 Hexagon Bolt M10*80 4PCS	 #6 Hexagon Bolt M10*70 2PCS	 #7 Hexagon Bolt M10*20 10PCS	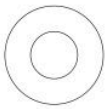 #8 Flat Gasket Φ12 104PCS
 #9 Lock Nut M12 52PCS	 #10 Flat Gasket Φ10 78PCS	 #11 Lock Nut M10 34PCS	 #12 Middle Column Rotating Shaft 2PCS
 #13 Casing Φ11*Φ16*95 4PCS	 #14 Casing Φ11*Φ16*75 6PCS	 #15 Casing Φ11*Φ16*66 2PCS	 #16 Casing Φ11*Φ16*50 2PCS
 #17 Hexagon Bolt M10*100 10PCS	 #18 Allen wrench 3mm 1PC	 #19 Allen wrench 6mm 2PCS	 #20 Ratchet Wrench 17mm 2PCS
 #21 Ratchet Wrench 19mm 2PCS	**Note:** The tools #18 through #21 are in the spare parts kit.		

Spare parts kit

If any part is missing or damaged in the main parts bag, please find the corresponding replacement with the matching part number and specification from the spare parts kit.

 #1 Hexagon Bolt M12*100 2PCS	 #2 Hexagon Bolt M12*105 1PC	 #3 Hexagon Bolt M10*140 1PC	 #4 Hexagon Bolt M10*95 1PC
 #5 Hexagon Bolt M10*80 1PC	 #6 Hexagon Bolt M10*70 1PC	 #7 Hexagon Bolt M10*20 1PC	 #8 Flat Gasket Φ12 10PCS
 #9 Lock Nut M12 3PCS	 #10 Flat Gasket Φ10 3PCS	 #11 Lock Nut M10 2PCS	

INSTALLATION GUIDE

Tips Scan the QR code to download the app and watch the assembly video.

Finding Your Product Assembly Video

To locate the assembly video for your MERACH product, please follow these steps within the MERACH App:

1. **Open the App** and go to the "**Profile**" page, then tap the **Settings icon** (⚙) in the top right corner.
2. In the Settings menu, scroll to find "**Assembly Guides**" under the **Support & Services** section.
3. Browse the list to find your specific product model (e.g., Q1S Rower, R7 Trainer, etc.).
4. Tap on your product name to view the step-by-step assembly video or guide.

NOTE: Ensure your app is updated to the latest version for full access to all guides.

- If you have purchased the exercise mat, please install it first, then install the Smith machine.
- When tightening the screws before Step 24 with ratchet wrenches, do not fully tighten them. Fully tighten all screws after Step 24.

Step 1: Install the bottom structure

Align the Left Bottom Tube (B) and Right Bottom Tube (C) with the two ends of the Bottom Connecting Pipe (A) respectively, and place the Connecting Pipe Fixing Plate (D) on the left and right sides. After aligning the holes, insert 2PCS Hexagon Bolt (1) and 2PCS Flat Gasket (8) from each side. Then place 4PCS Flat Gasket (8) and screw in the Lock Nut (9). Tighten the screws with 2PCS 19mm Ratchet Wrench (21), but do not lock them completely.

Note: The difference between the left and right bottom tubes: the front side screw hole spacing on the left leg tube is larger, and there are through holes on the side.

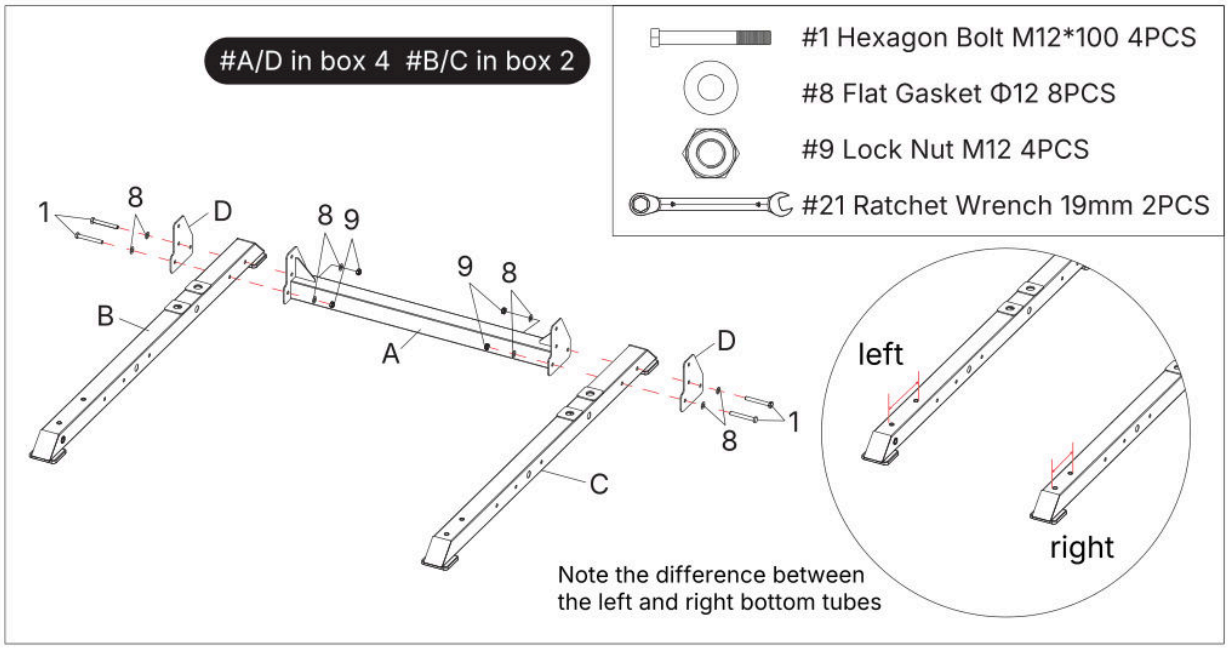

Step 2: Install the Rear Pillar Tube

Install 2PCS Rear Pillar Tube (E) onto the bottom structure. After aligning the holes, insert 2PCS Hexagon Bolt (1) and 2PCS Flat Gasket (8) into each side respectively. Then place 1PC Flat Gasket (8) on each side and screw in Lock Nut (9). Tighten the screws with 2PCS 19mm Ratchet Wrench (21), but do not lock them completely. Note the orientation of Rear Pillar Tube (E): the top has more holes, and there is no distinction between left and right.

Note: If the base frame assembly needs to be installed against a wall, it should be more than 40cm away from the wall to allow sufficient space for installing other accessories and moving parts.

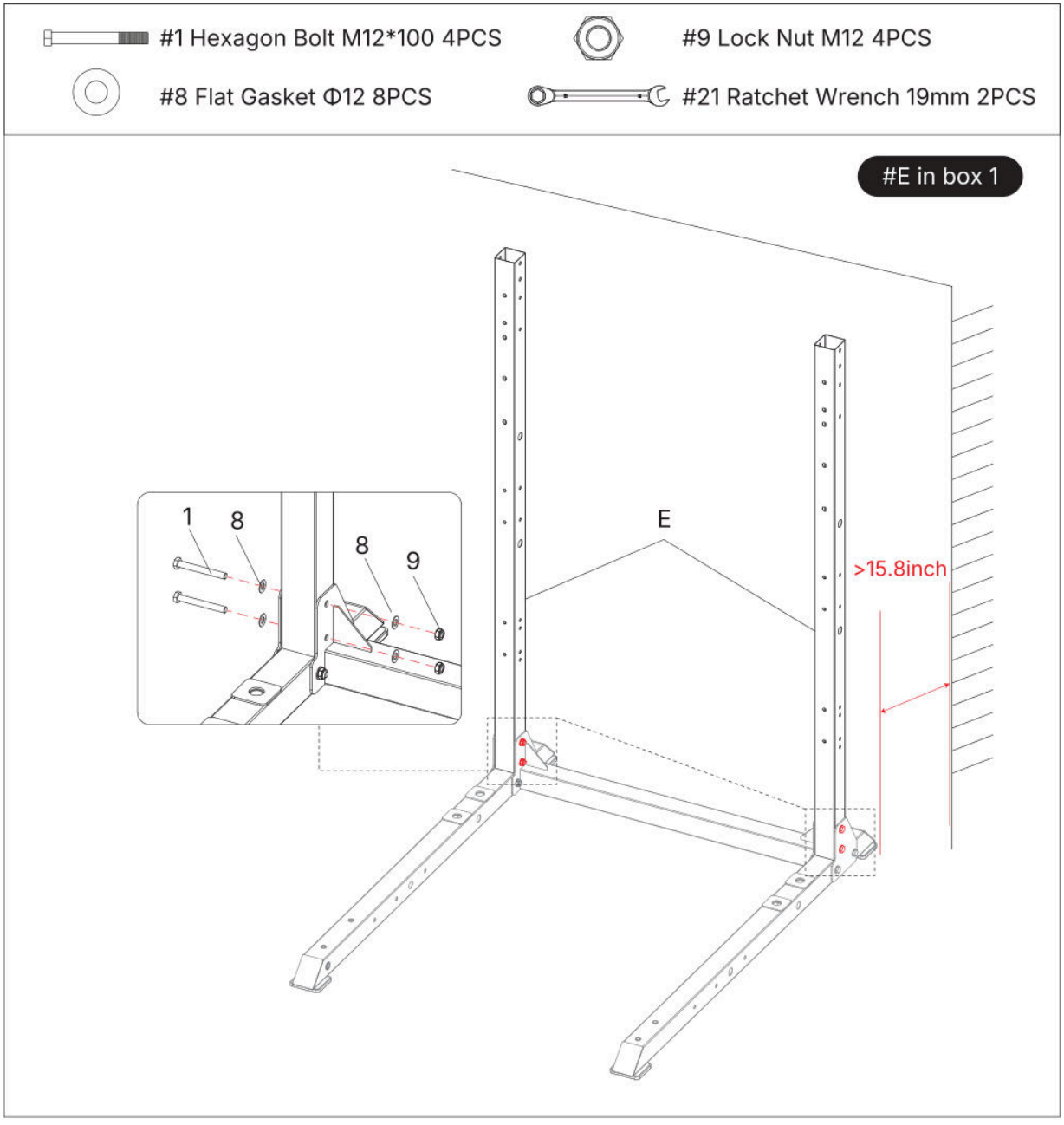

Step 3: Install the Connecting piece

Align the Connecting piece (F&G&H) as shown in the figure, aligning the holes. Insert 3PCS Hexagon Bolt (1) with 3PCS Flat Gasket (8) on each side. After insertion, place 1PC Flat Gasket (8) on each side and screw in Lock Nut (9). Tighten the screws with 2PCS 19mm Ratchet Wrench (21), but do not lock them completely.

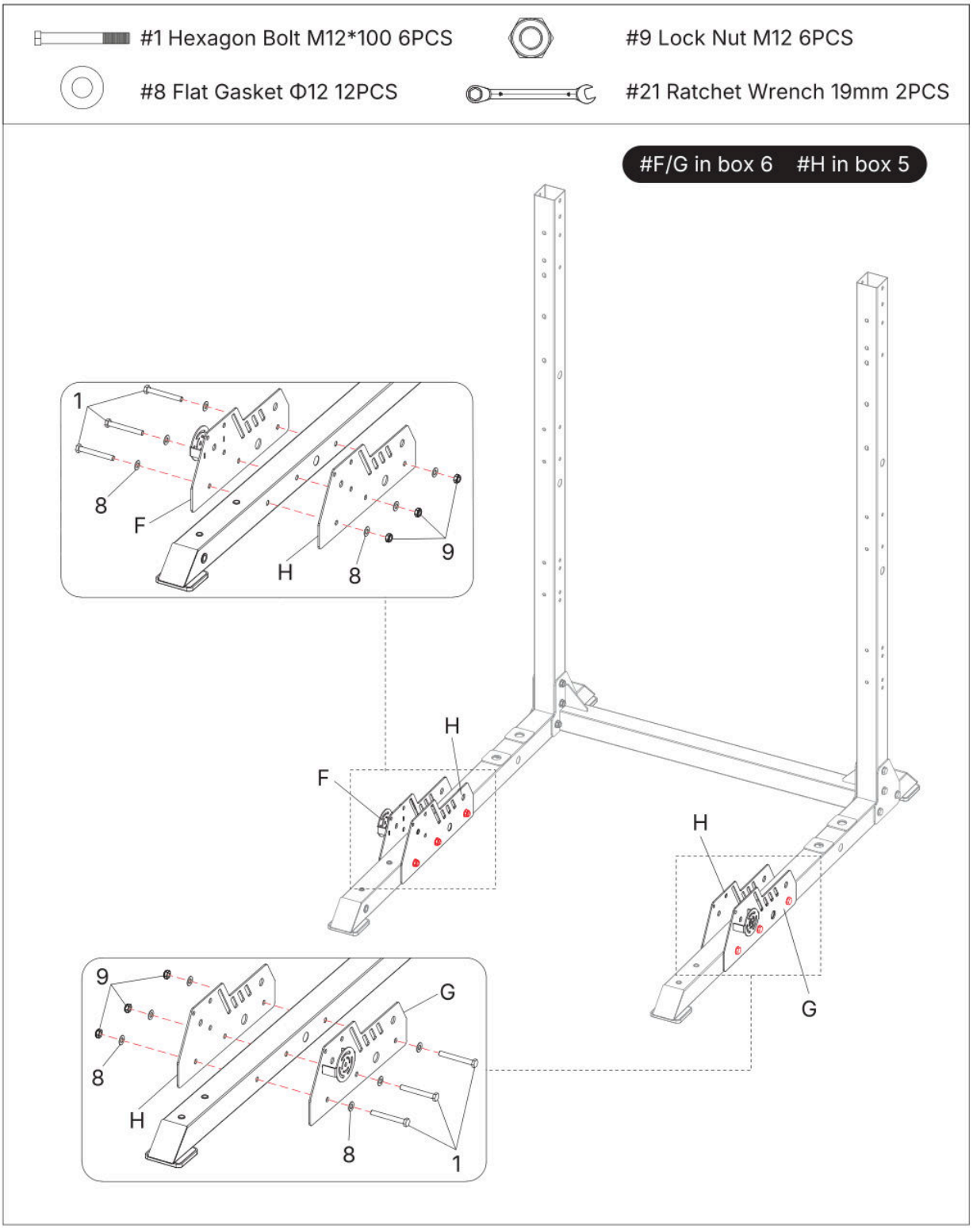

Step 4: Install the Neutral Pillar Tube

Install the Left neutral pillar tube (I) and Right neutral pillar tube (J) into the Connecting piece on the left and right sides respectively. Insert the Middle column rotating shaft (12) into the holes. Place one Flat gasket (10) on each Hexagon bolt (7), and screw them in from both ends. Tighten the screws with 2PCS 17mm Ratchet Wrench (20), but do not lock them completely.

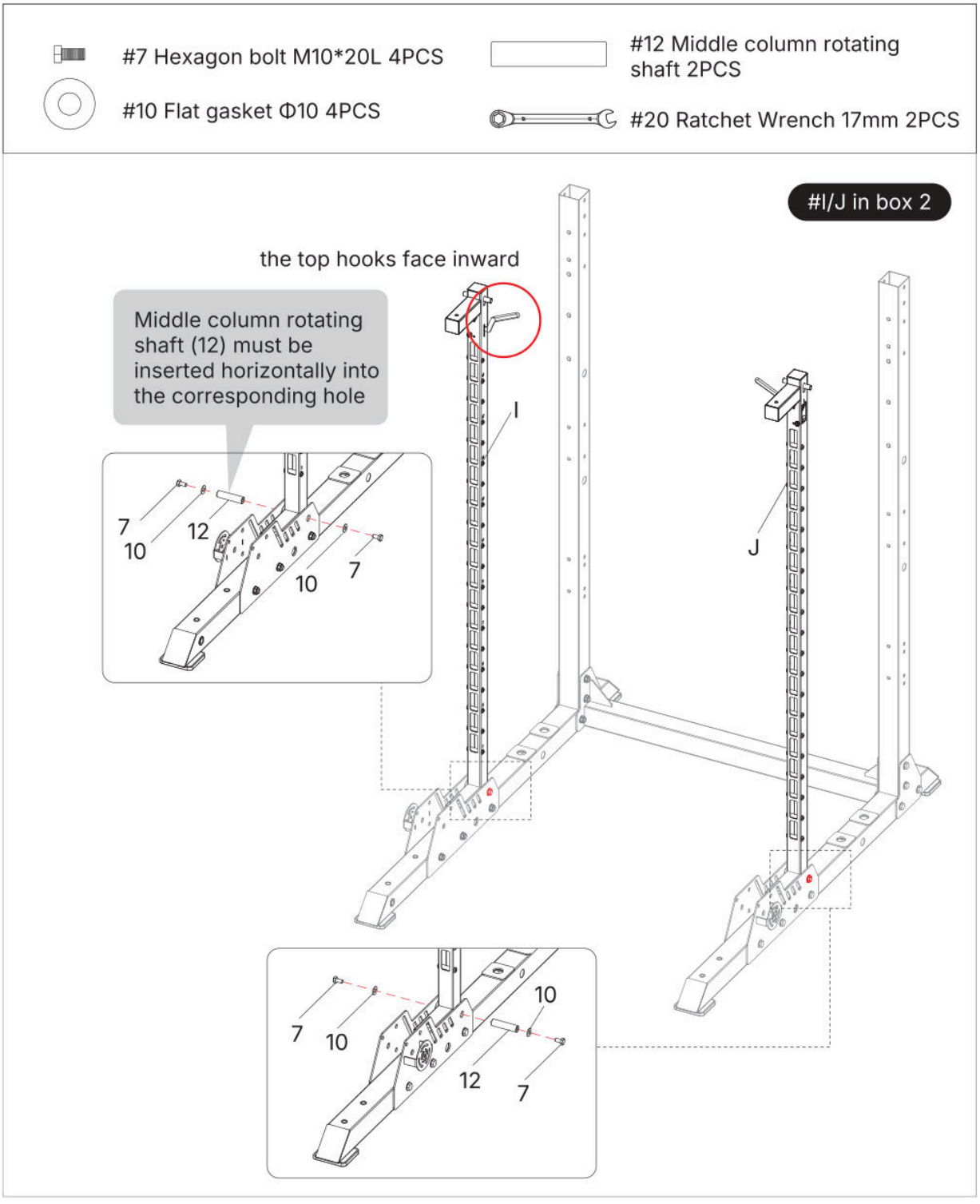

Step 5: Assemble the Guide pillar and Olympic barbell

1. Unscrew the screw at both ends of the Olympic barbell (K), remove the sleeves, install the O-bar lifting sliding sleeve (L) onto both ends of the Olympic barbell (K), and screw the sleeves back on.

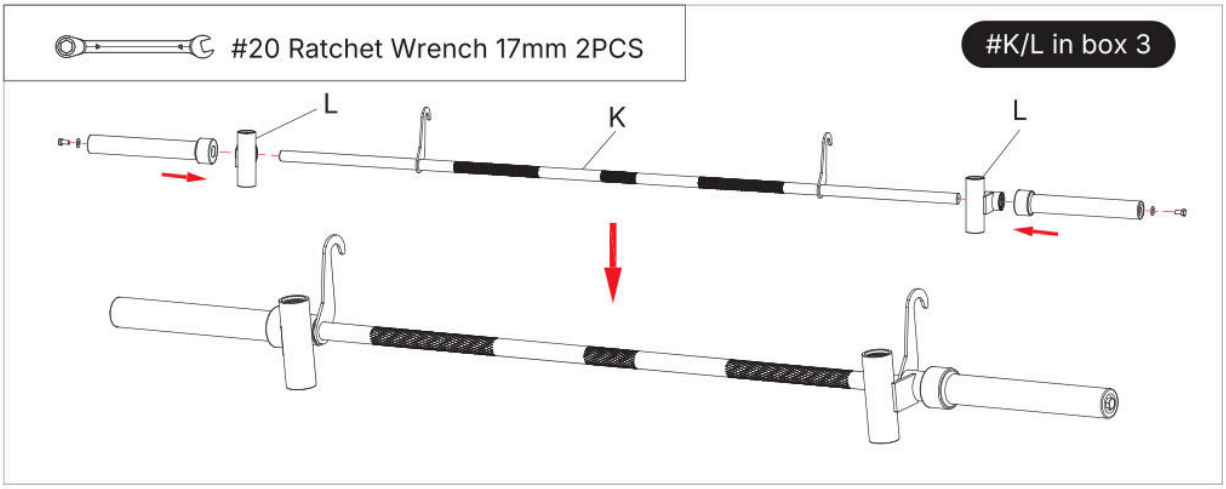

2. Insert the Guide pillar (M) into the O-bar lifting sliding sleeve (L), then from the bottom, slide the Cushion pad (P), Compression spring (O), and Olympic barbell collar (N) onto the Guide pillar (M) in sequence.

Note: The top end has screw holes.

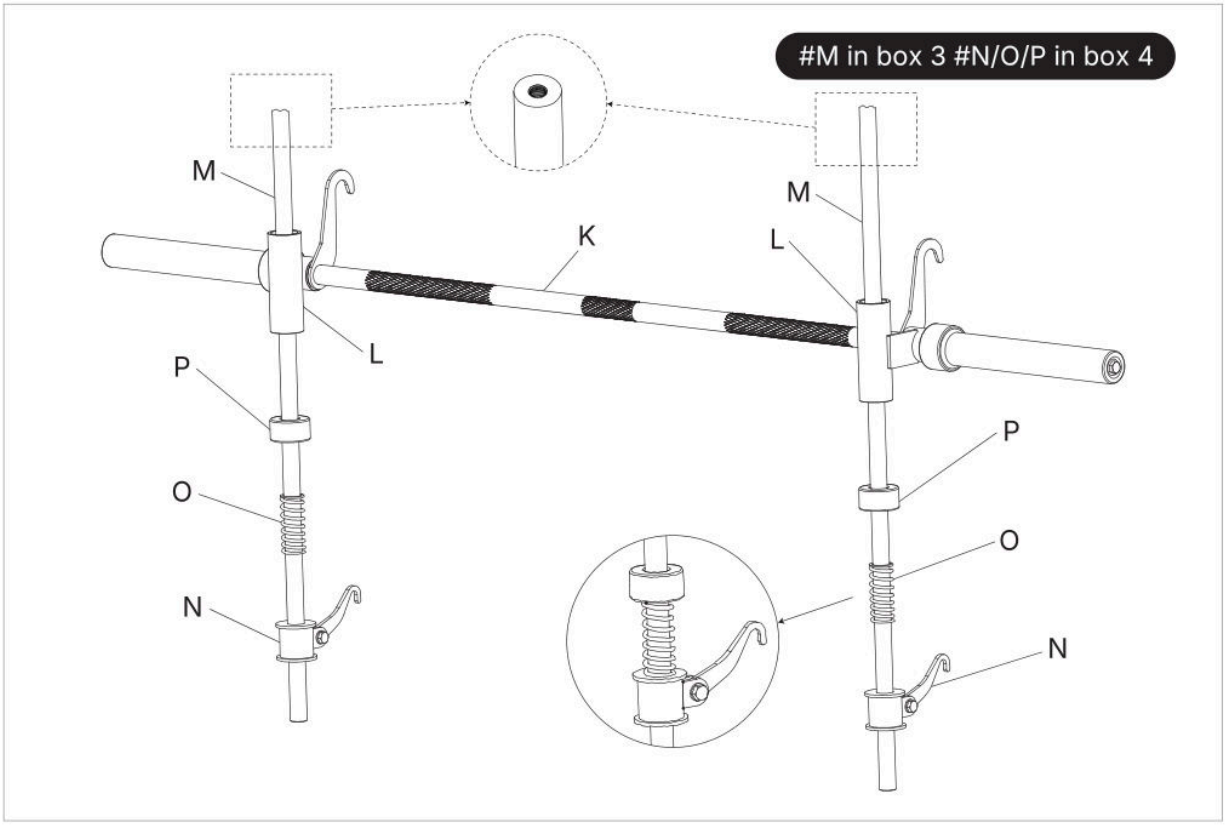

Step 6: Install the Guide pillar

Insert the Guide pillar (M) into the bottom hole, hang the hook into the appropriate hole, align the top holes, then insert the Hexagon bolt (6) and Flat gasket (10) from the top, and tighten with 1PC 17mm Ratchet Wrench (20).

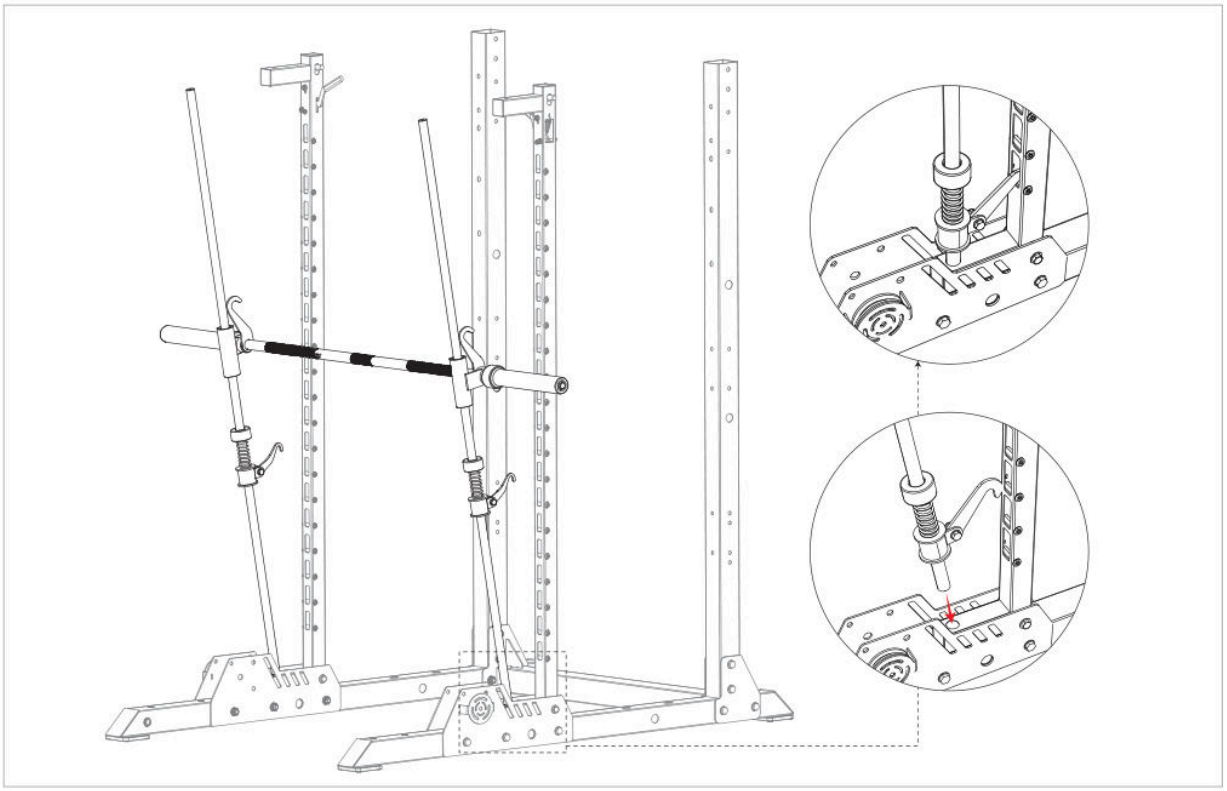

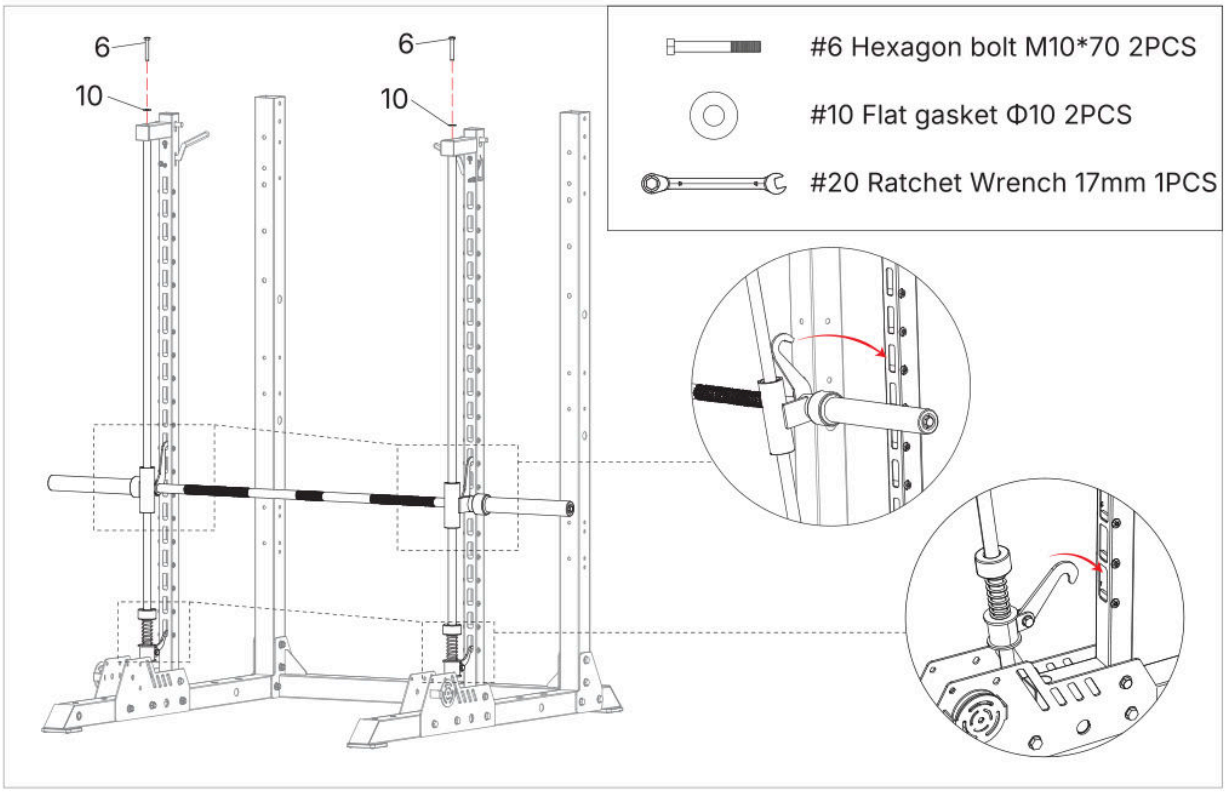

Step 7: Install the Front pillar tube

Install 1PC Front pillar tube (Q) into the Connecting piece, insert 2PCS Hexagon Bolts (1) with Flat Gasket (8), then place Flat Gasket (8) and screw on Lock Nut (9). Tighten the screws with 2PCS 19mm Ratchet Wrench (21), but do not lock them completely. Repeat the same operation for the other side.

Note the orientation of the Front pillar tube (Q): the numbers increase from bottom to top.

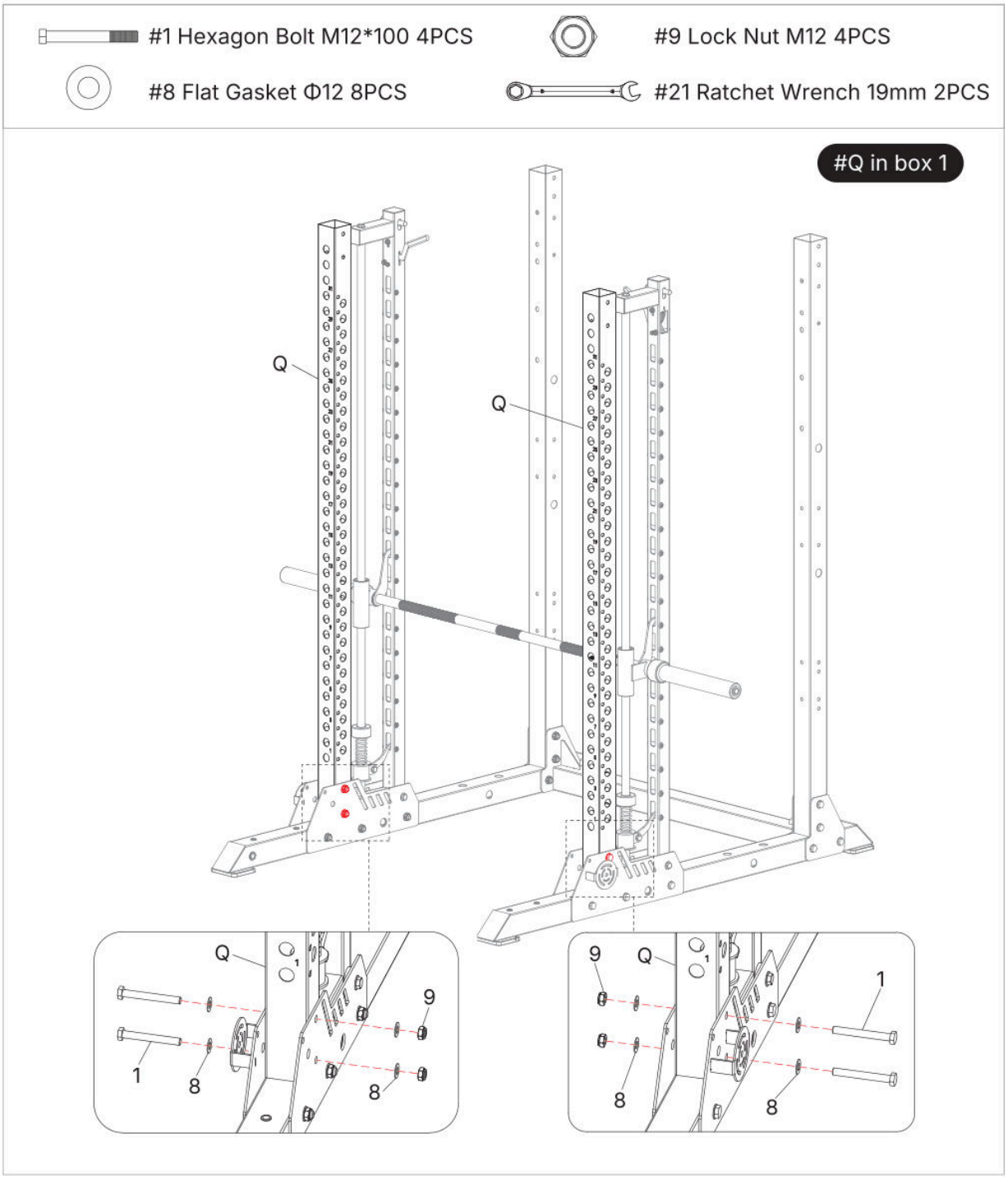

Step 8: Install the Connecting piece and Pulley Adjustment Assembly

1. Slide the Pulley Adjustment Assembly (AG) onto the top end of the Front pillar tube (Q). Pull the handle outward by hand to adjust the hole position.
2. Slide 2PCS Connecting piece (R) onto the top end of the Rear pillar tube (E). Secure with 2PCS Hexagon Bolt (1) with Flat Gasket (8) each, then place Flat Gasket (8) and screw in Lock Nut (9). Repeat the same operation for the other side. Tighten the screws with 2PCS 19mm Ratchet Wrench (21), but do not lock them completely.

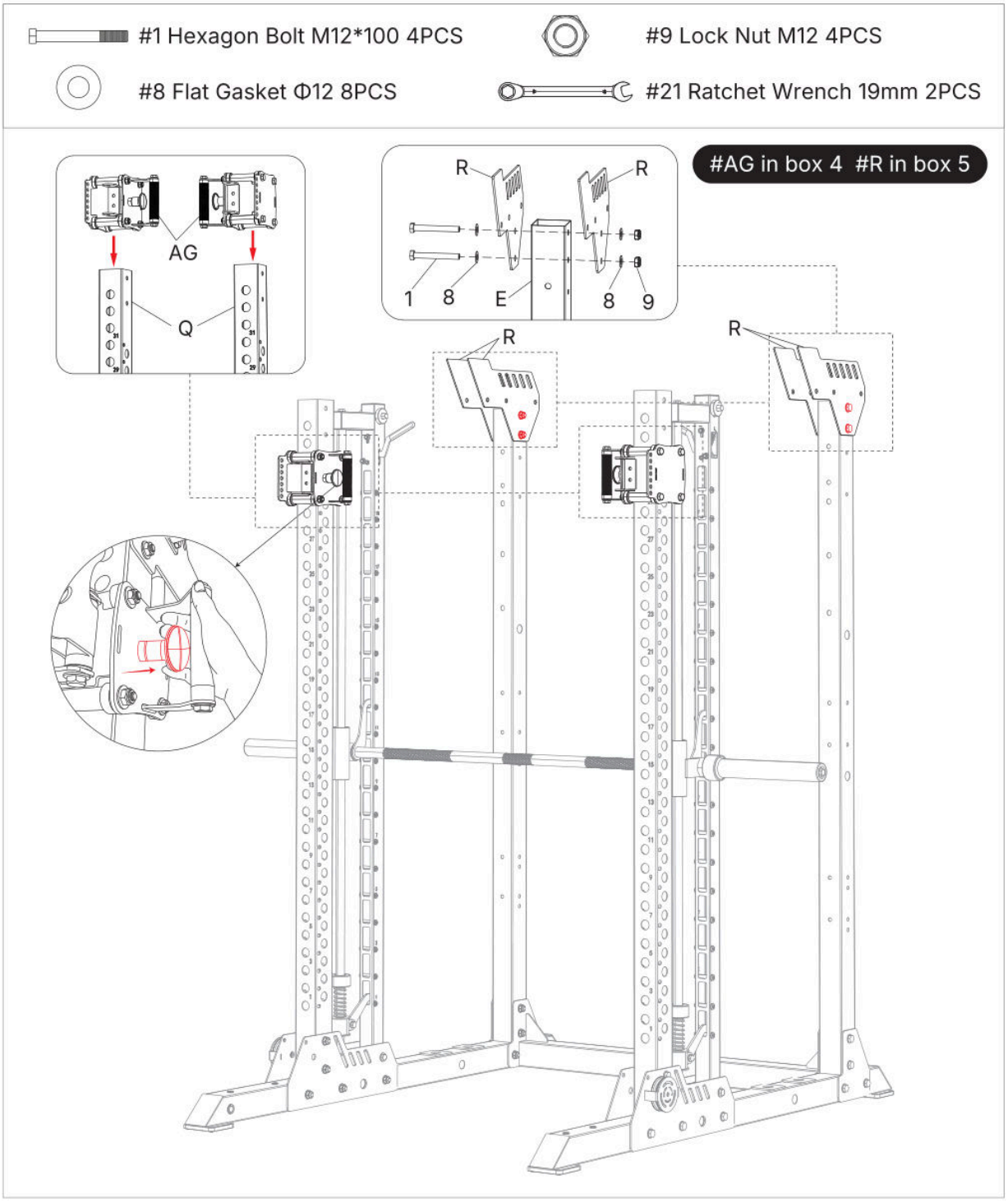

STEP 9: Install the Guide Rod and Weight Stack

1. Thread the Cushion Pads (P) onto the bottom of the Guide Rod (T), and insert them into the bottom holes of the Left & Right Bottom Tubes (B&C).

Note: The top of the Guide Rod (T) has a screw hole.

2. Take out the Weight Stack (BK) and install it onto the Guide Rod (T) sequentially from the top. Each side has 13PCS Weight Stack (BK).

Note: Weight Stack (BK) must be installed by at least two people working together. Do not drop them from heights to avoid injury or damage to equipment.

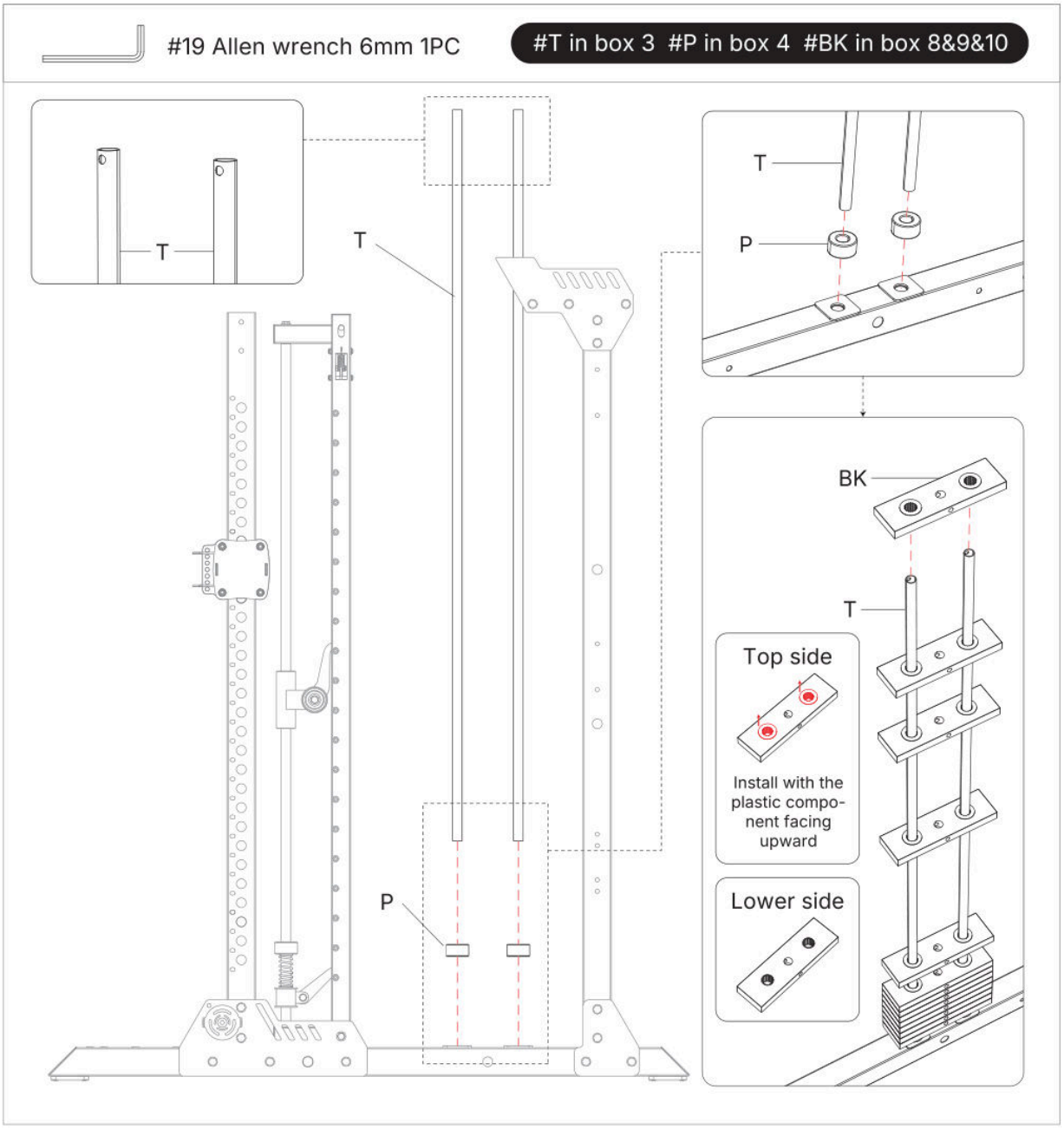

STEP 10: Install the First Counter Weight Stack

1. Insert Weight Selector Rod (BM) into the First Counter Weight Stack (BL), and insert Dowel Pin (BN) to secure it. Then place the assembled Weight Stack (BL) onto the Guide Rod (T) from the top, with Weight Selector Rod (BM) inserted into the center hole of the weight plate.

2. Insert the Ridge pole (S) from the top, remove the pre-installed screws using Allen Wrench (19), lift the Guide Rod (T) upward to align the holes, and re-tighten the screws by Allen Wrench (19).

Note: For convenient sticker application, the holes on the First Counter Weight Stack (BL) on both the left and right sides should be installed on the same side, either both at the rear or both at the front.

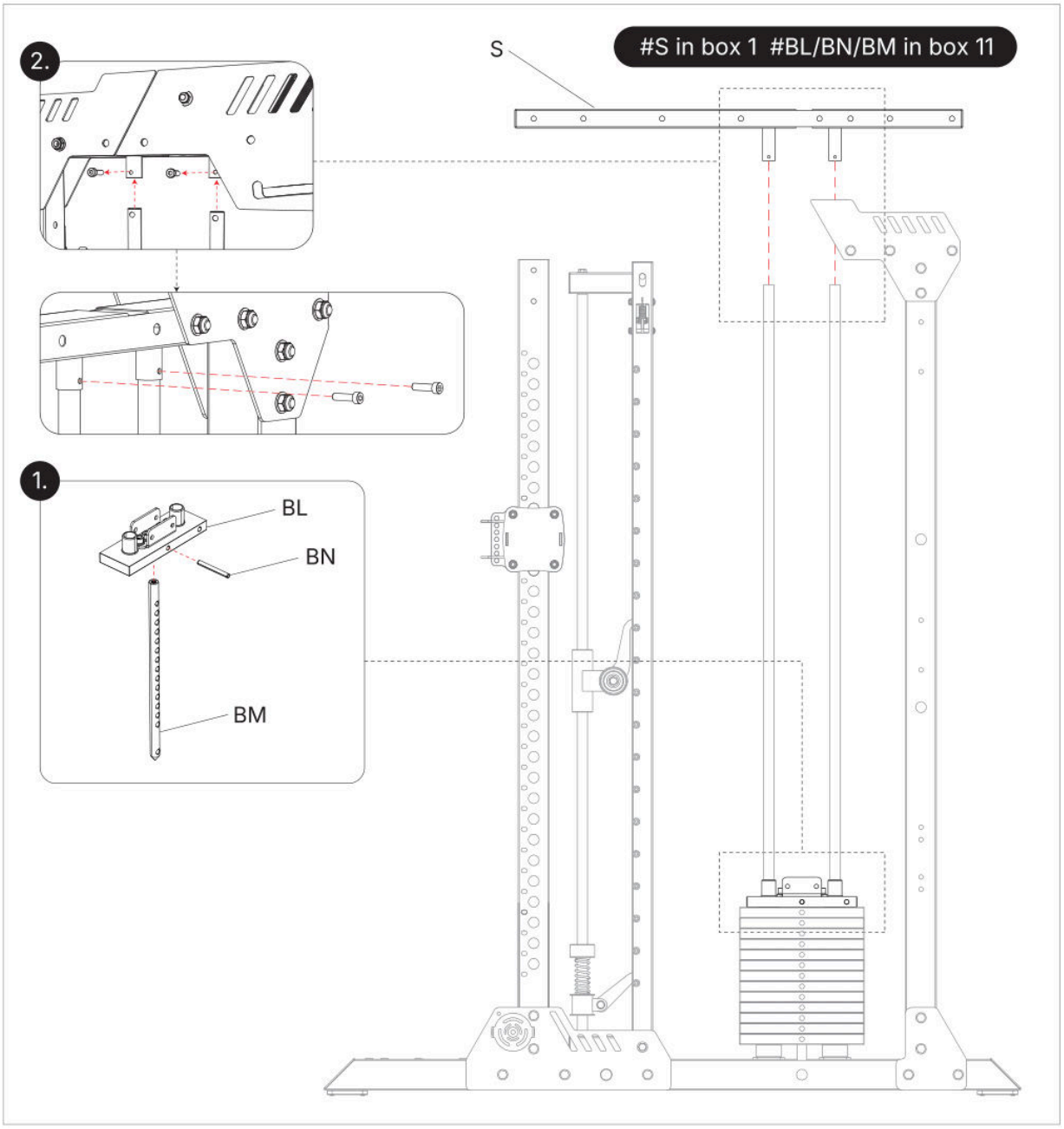

STEP 11: Install the Ridge pole

On one side, insert 3PCS Hexagon Bolt (1) with Flat Gasket (8), then screw on Flat Gasket (8) and Lock Nut (9). Repeat the same operation on the other side. Tighten the screws with 2PCS 19mm Ratchet Wrench (21), but do not lock them completely.

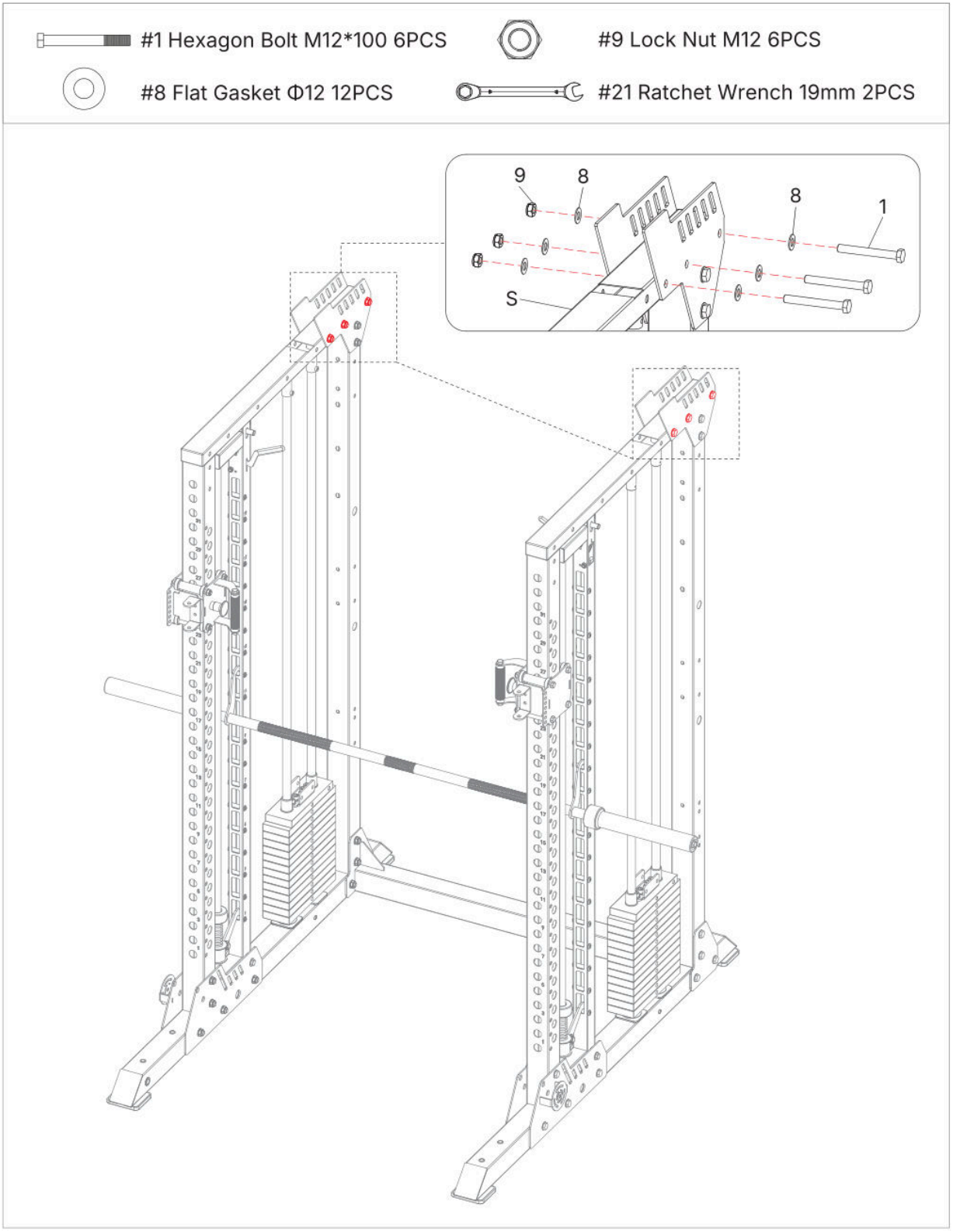

STEP 12: Apply the weight sticker

Apply the Weight Stack Sticker (BP) onto the Weight Stack (BK&BL), with the poundage increasing from top to bottom. The stickers (BP) can be placed on the inner side or the outer side of the machine according to personal preference. Use the hole at the top of the sticker for positioning.

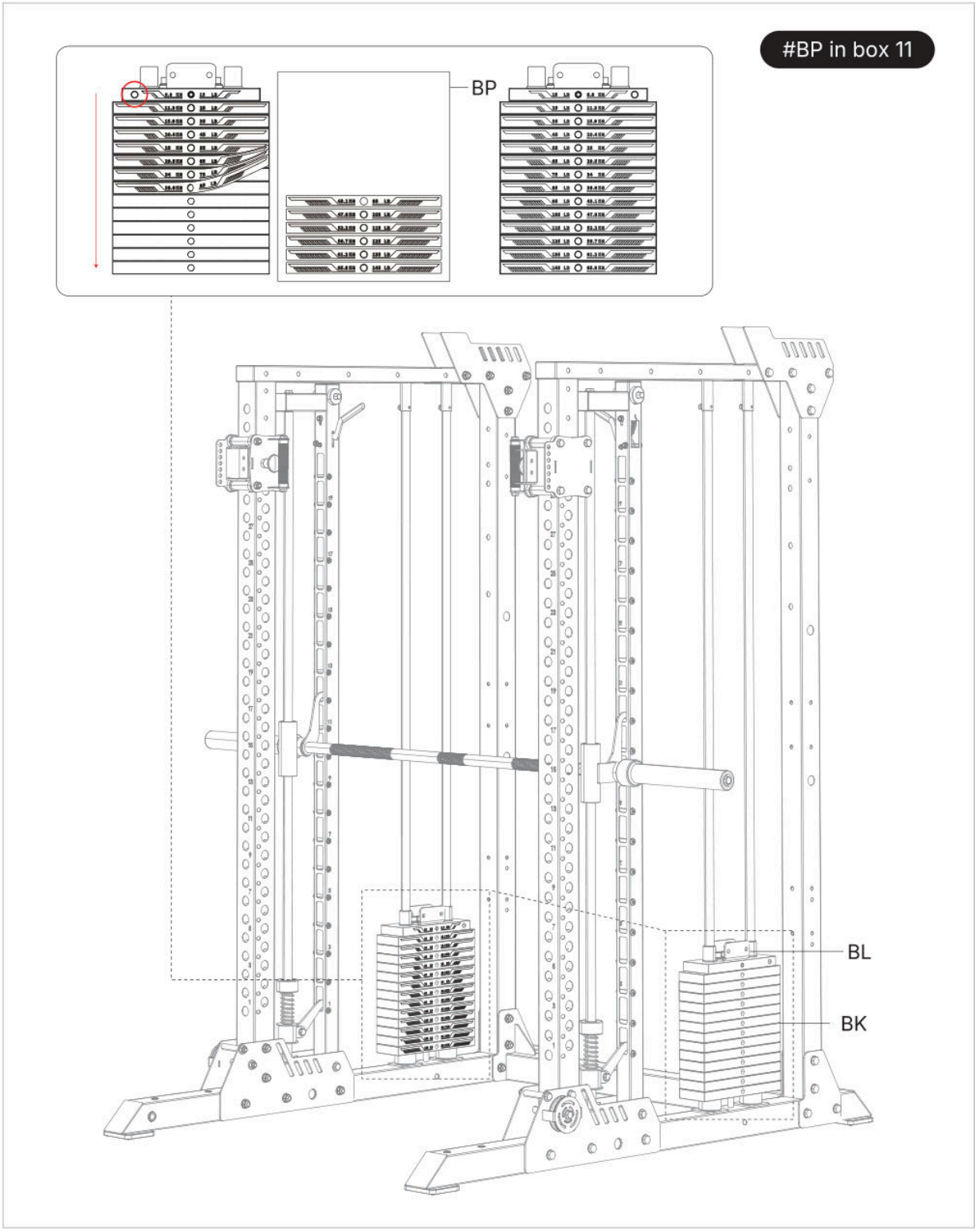

Step 13: Install the Load-bearing Pipe Assembly

1. Install Load-bearing Pipe Assembly (AH) on top of the Weight Stack (BL). Insert 2PCS Hexagon Bolt (5) with Flat Gasket (10) from one side, then screw on Flat Gasket (10) and Lock Nut (11) from the other side, and tighten using 2PCS 17mm Ratchet Wrench (20). Repeat the same operation on the other side.
2. Slip the Captive Pin (BO) over the Pulley Fixed U-Set (U), and screw it on from the top of the Load-bearing Pipe Assembly (AH).

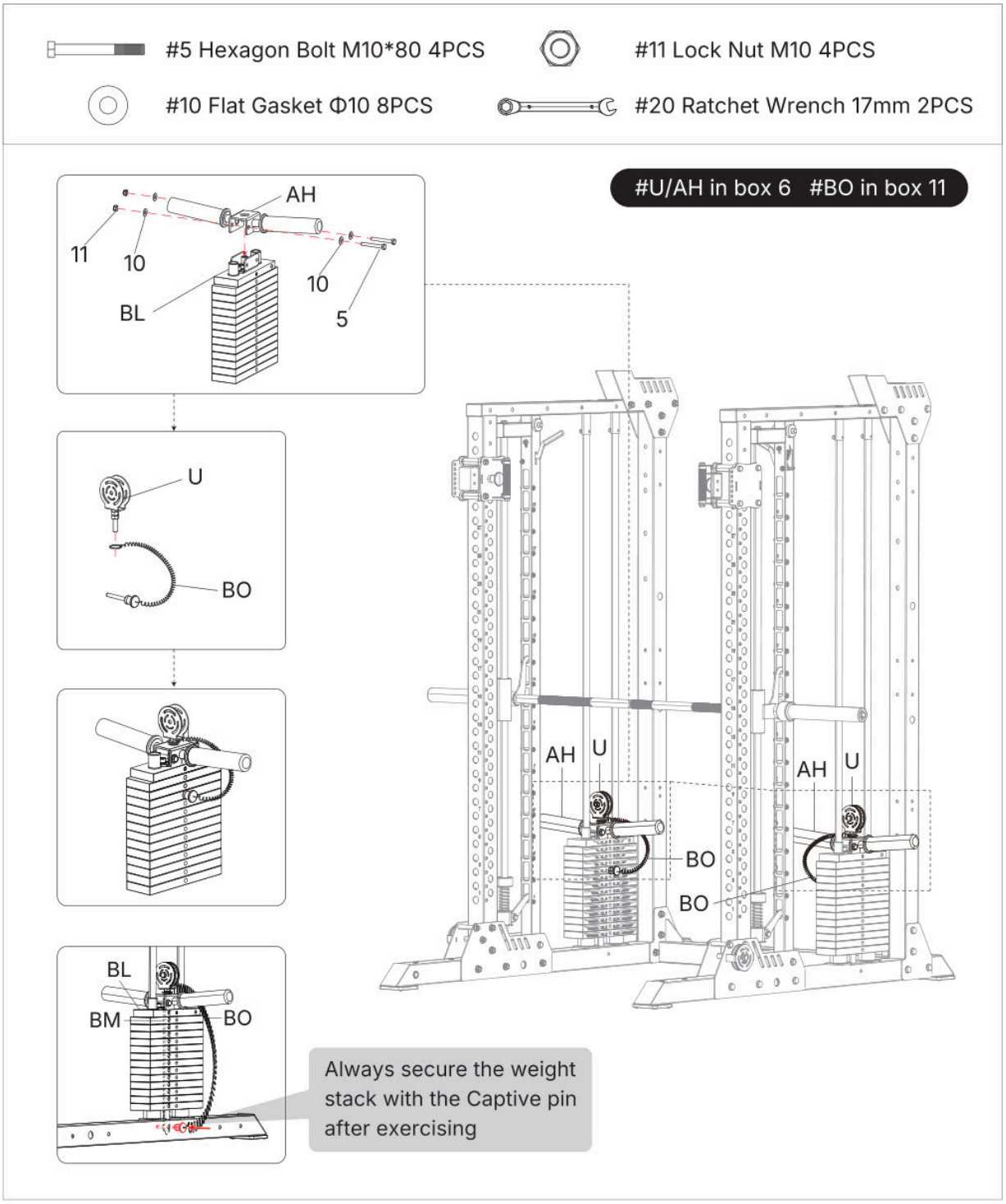

Step 14: Install the Connecting piece

1. Install the Connecting piece on left side first. Slide 2PCS Middle pillar bushing (Y) onto the two bolts on top of the Left neutral pillar tube (I).
2. Install the Left connecting piece (V) and Connecting piece (X) in the direction shown in the figure. Insert 5PCS Hexagon Bolt (1) with Flat Gasket (8) into the corresponding holes, then screw on Flat Gasket (8) and Lock Nut (9). Tighten the screws with 2PCS 19mm Ratchet Wrench (21), but do not lock them completely.
3. The same operation is performed on the other side.

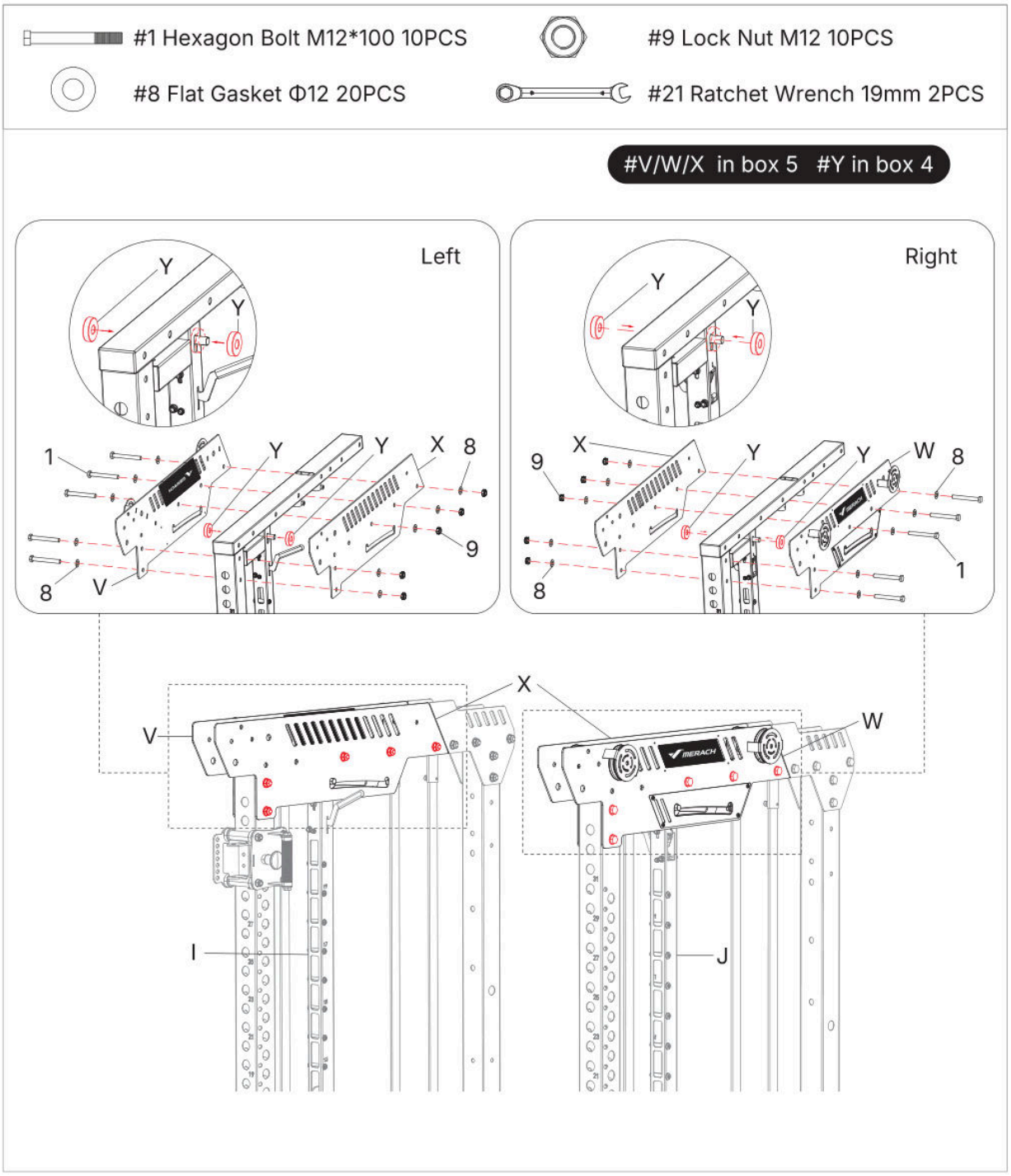

Step 15: Install the Pull-up bar

Align the Pull-up bar (Z) with the holes of the Connecting piece (X). Insert 2PCS Hexagon Bolt (2) with Flat Gasket (8) from one side, then screw on Flat Gasket (8) and Lock Nut (9). Tighten the screws with 2PCS 19mm Ratchet Wrench (21), but do not lock them completely. Repeat the same operation on the other end.

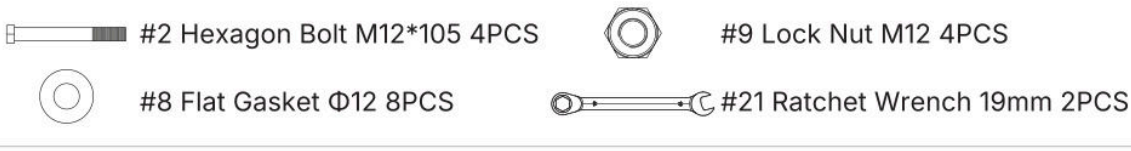

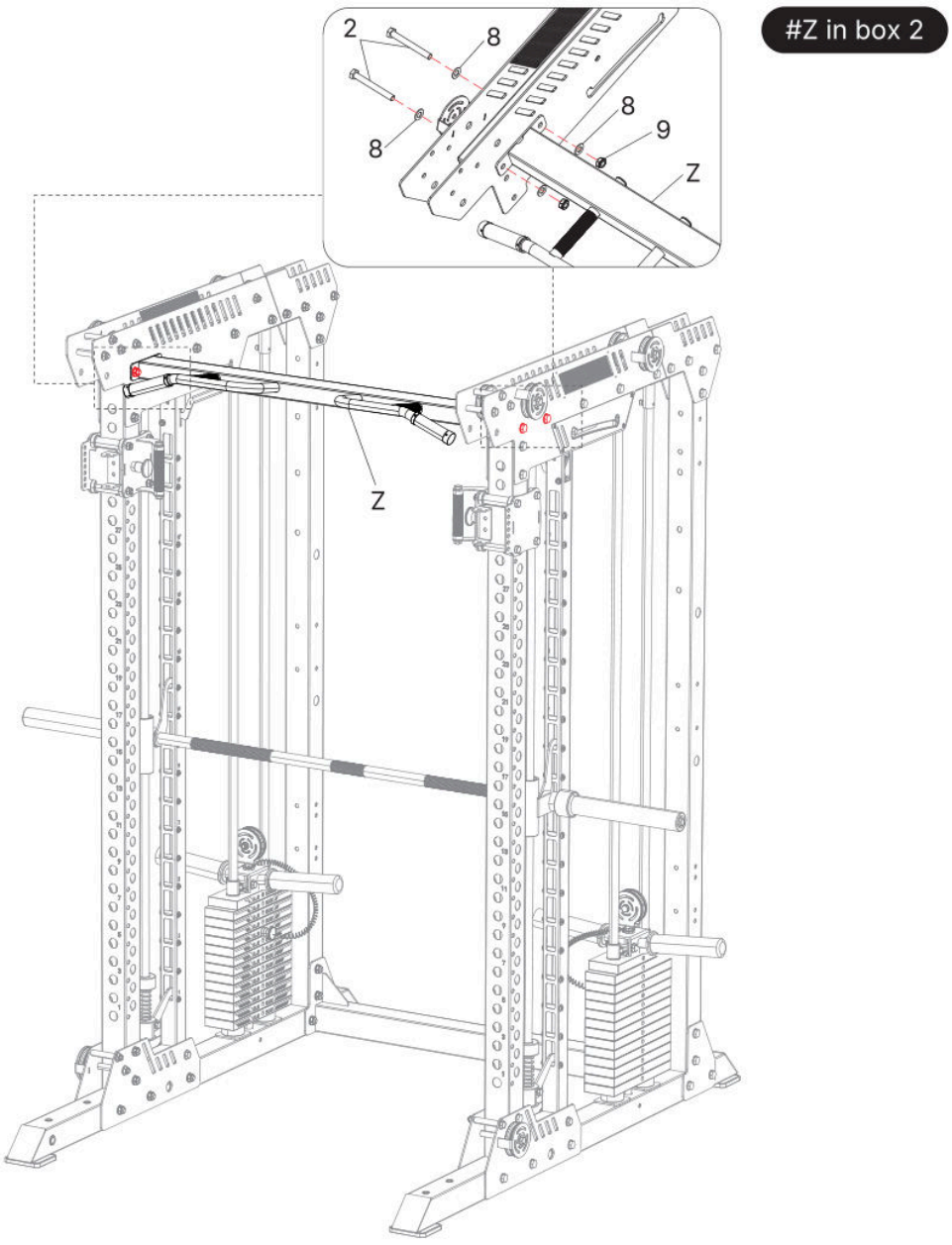

Step 16: Install the Pulley

1.1 Install left side of the top pulley

a. First install the left side. Insert 1PC Hexagon Bolt (17) with Flat Gasket (10) through hole ①, and pass it through the Casing (16) and Pulley (AB), and hand-tighten the Flat Gasket (10) and Lock Nut (11) from the other side by hand.

Place the Pulley (AB) in the left slot, insert 1PC Hexagon Bolt (3) with a Flat Gasket (10) through hole ② and pass it through the Casing (15) and Pulley (AB). Hand-tighten the Flat Gasket (10) and Lock Nut (11) from the other side by hand.

b. Place the pulley (AB) in the left slot, insert 1PC Hexagon Bolt (3) with Flat Gasket (10) through hole ③, and pass it through the Casing (13), hand-tighten Flat Gasket (10) and Lock Nut (11) from the other side by hand.

c. Insert 1PC Hexagon Bolt (17) with Flat Gasket (10) through hole ④⑤, through the Casing (14), hand-tighten the Flat Gasket (10) and Lock Nut (11) from the other side.

d. Insert 1PC Hexagon Bolt (17) with Flat Gasket (10) through hole ⑥ from the inside of the frame, hand-tighten the Flat Gasket (10) and Lock Nut (11) from other side.

e. Tighten the screws with 2PCS 17mm Ratchet Wrench (20), but do not lock them completely.

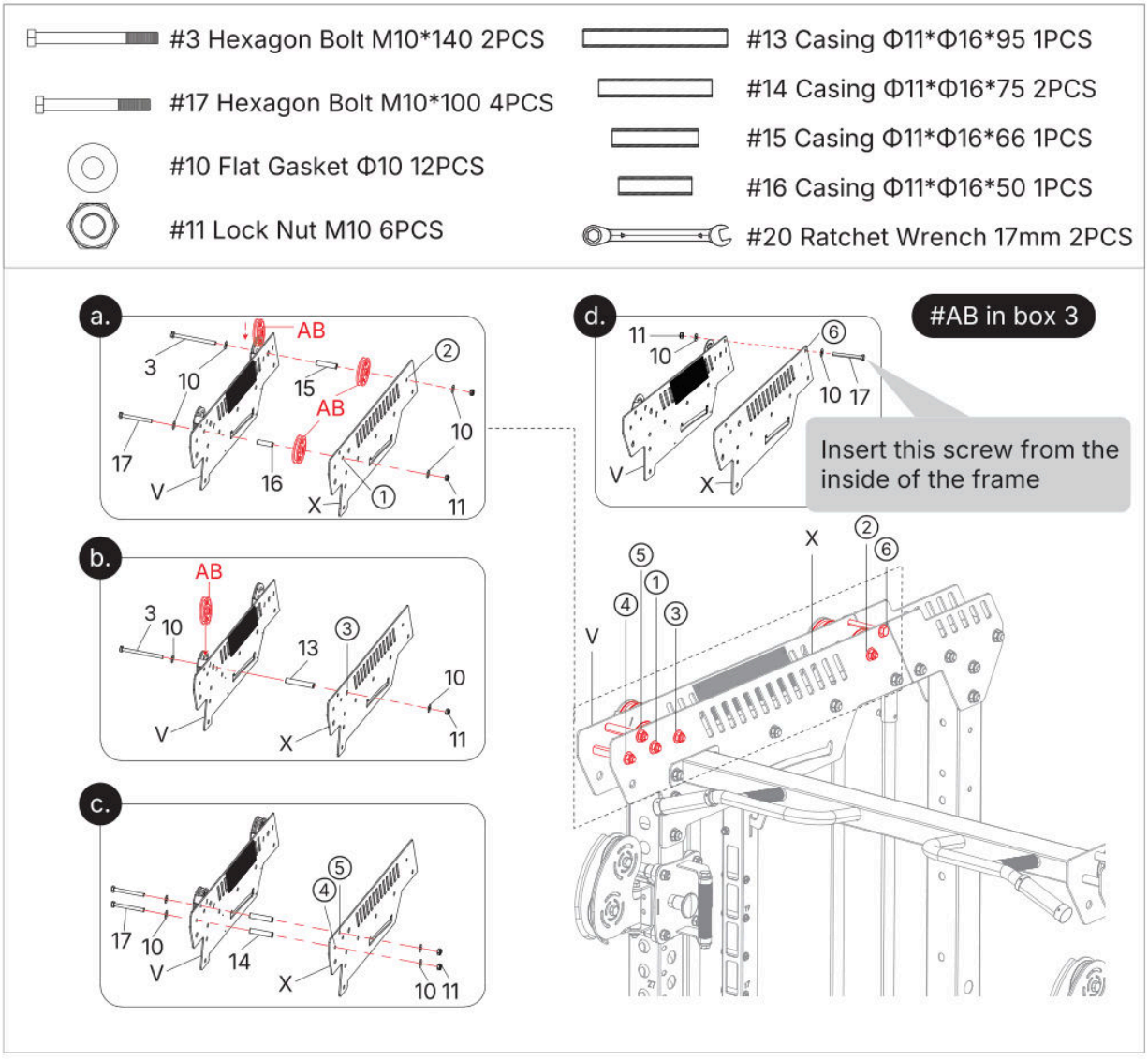

1.2 Install right side of the top pulley

#3 Hexagon Bolt M10*140 2PCS
#17 Hexagon Bolt M10*100 4PCS
#10 Flat Gasket Φ10 12PCS
#11 Lock Nut M10 6PCS
#13 Casing Φ11*Φ16*95 1PCS
#14 Casing Φ11*Φ16*75 2PCS
#15 Casing Φ11*Φ16*66 1PCS
#16 Casing Φ11*Φ16*50 1PCS
#20 Ratchet Wrench 17mm 2PCS

#AB in box 3

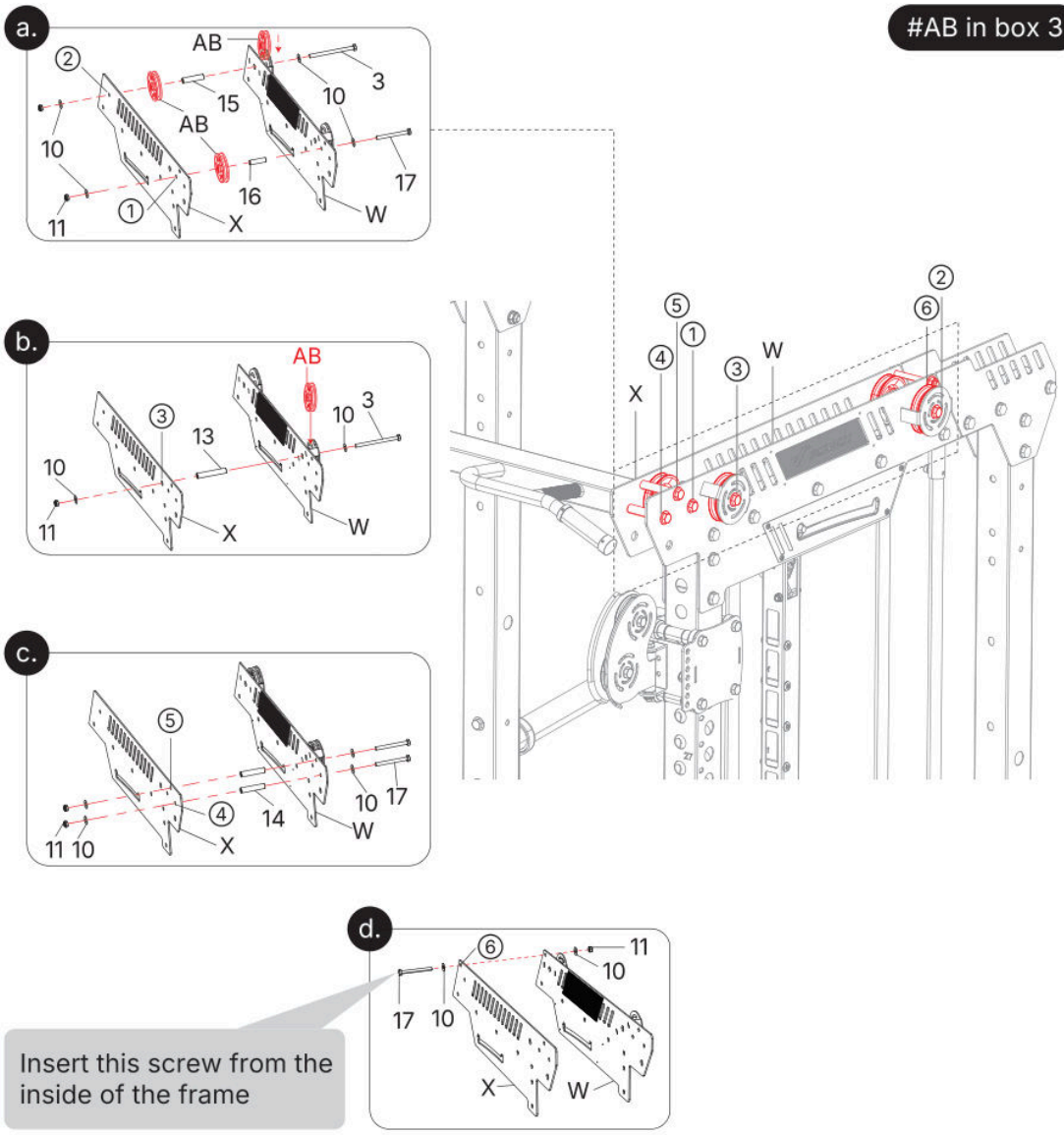

2.1 Install left side of the bottom pulley

a. Install the left side. Place the Pulley (AB) in the left slot, insert 1PC Hexagon Bolt (3) with Flat Gasket (10), and pass it through the Casing (13), screw on the Flat Gasket (10) and lock the Nut (11) from the other side.
b. Insert 1PC Hexagon Bolt (17) with Flat Gasket (10) through the top hole, and pass it through the Casing (14). Screw on the Flat Gasket (10) and Lock Nut (11) from the other side.
c. Repeat the same operation for the right side, tighten the screws with 2PCS 17mm Ratchet Wrench (20), but do not lock them completely.

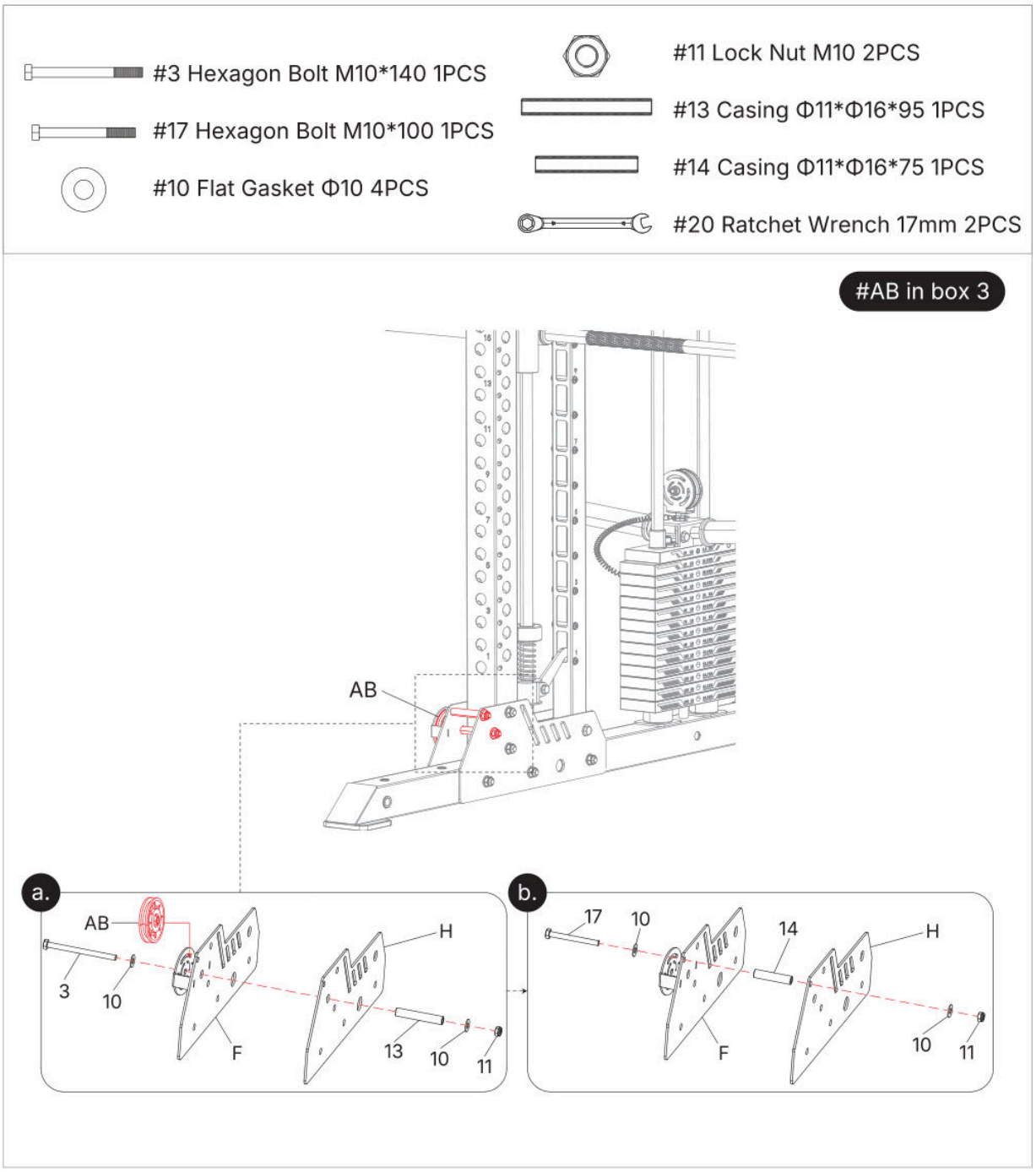

2.2 Install right side of the bottom pulley

#3 Hexagon Bolt M10*140 1PCS

#17 Hexagon Bolt M10*100 1PCS

#10 Flat Gasket Φ10 4PCS

#11 Lock Nut M10 2PCS

#13 Casing Φ11*Φ16*95 1PCS

#14 Casing Φ11*Φ16*75 1PCS

#20 Ratchet Wrench 17mm 2PCS

#AB in box 3

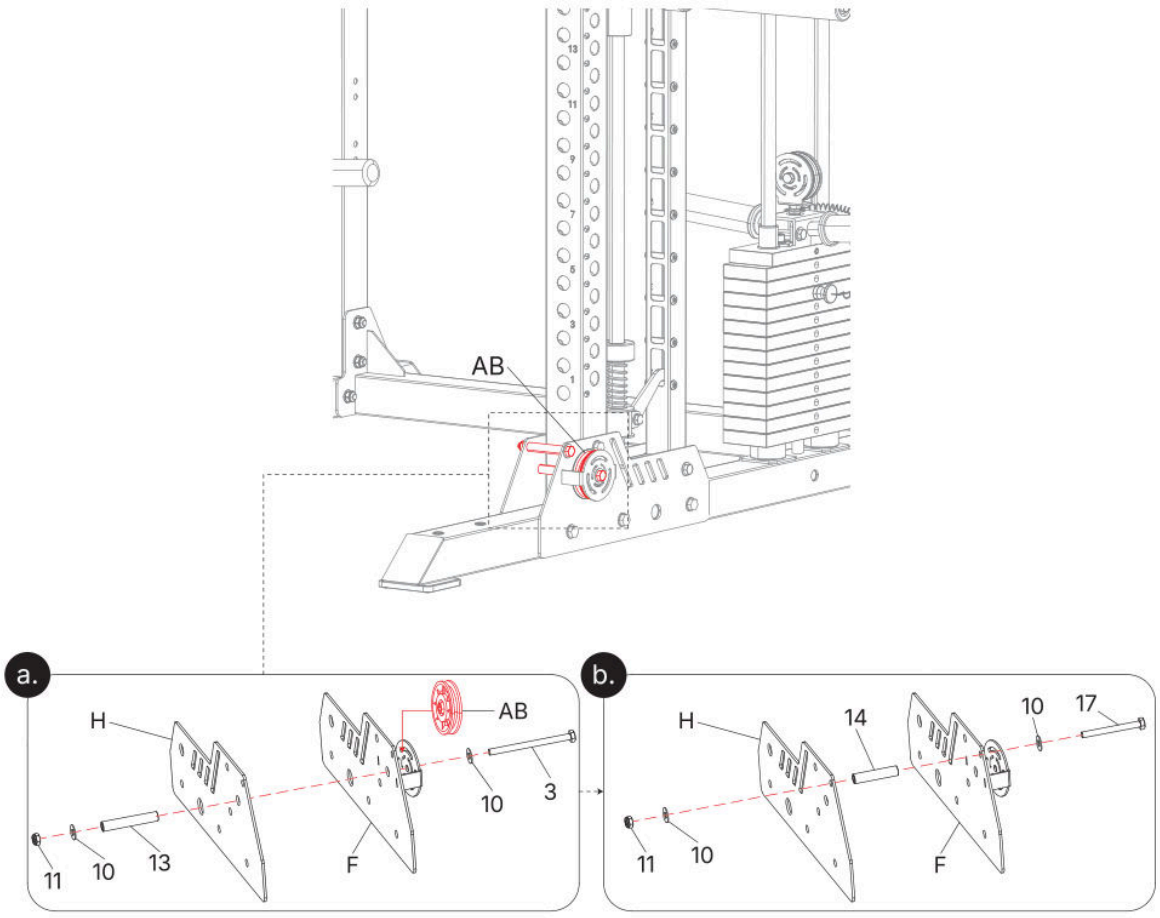

Step 17: Install the Barbell holder

Align the Barbell holder (AC) with the holes as shown in the figure. Insert Hexagon Bolt (4) with Flat Gasket (10), then from the other side screw on Flat Gasket (10) and Lock Nut (11). Tighten the screws with 2PCS 17mm Ratchet Wrench(20).
Note: The holes on the left and right Rear pillar tubes (E) are aligned, you can choose the installation direction based on your usage habits.

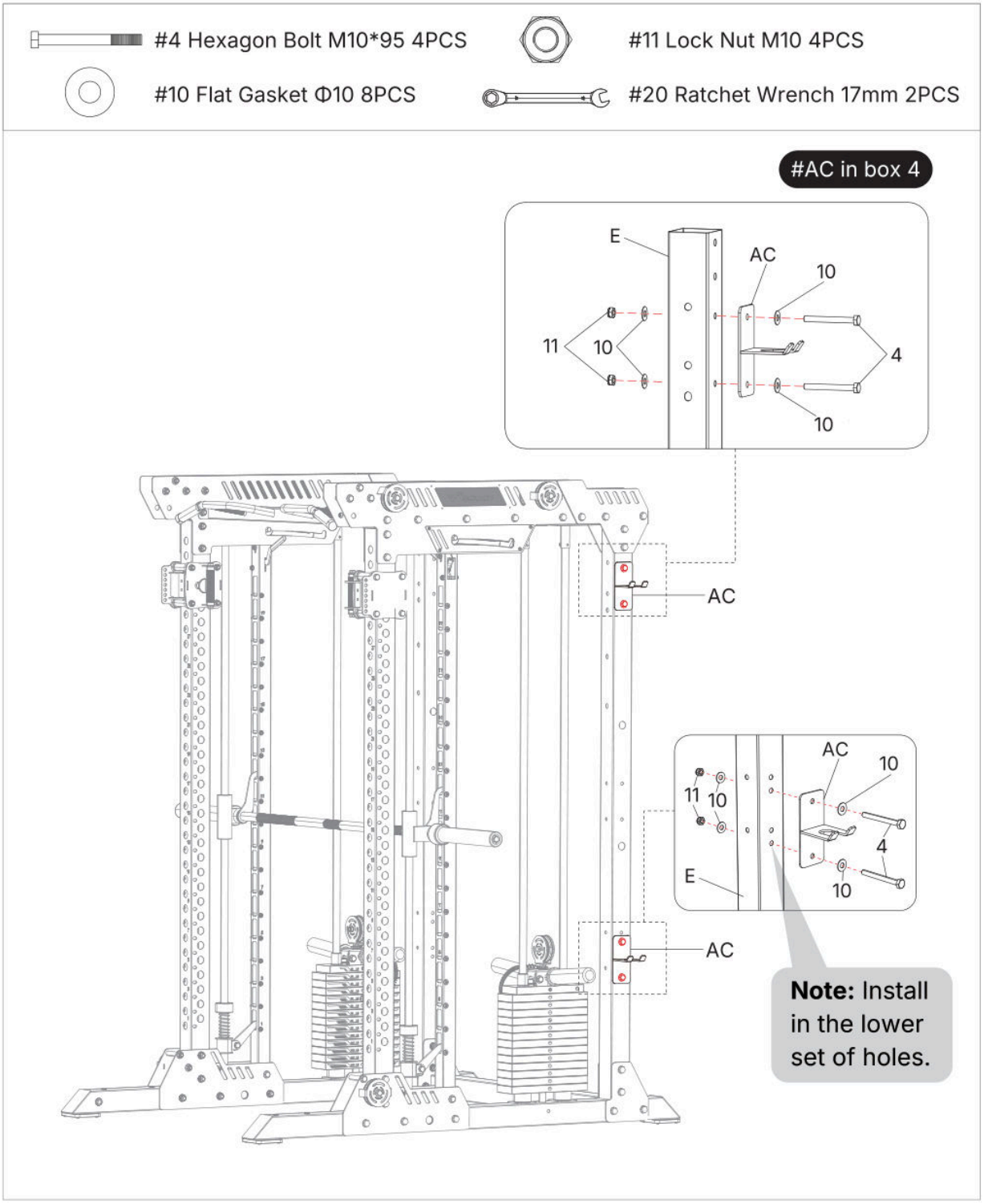

Step 18: Install the logo plate

Install the logo plate (AD) on the rear side of the Rear Pillar Tube (E). Align the two holes at the top, insert 4PCS Hexagon Bolt (1) with Flat Gasket (8), then from the other side screw on Flat Gasket (8) and Lock Nut (9). Tighten them with 2PCS 19mm Ratchet Wrench (21).

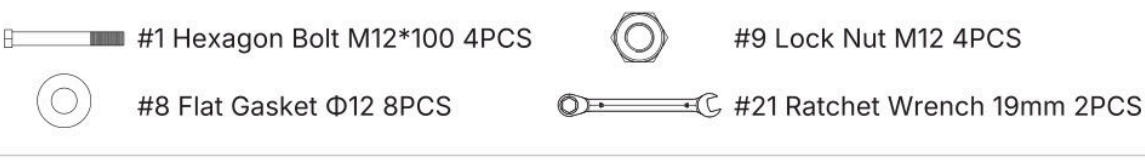

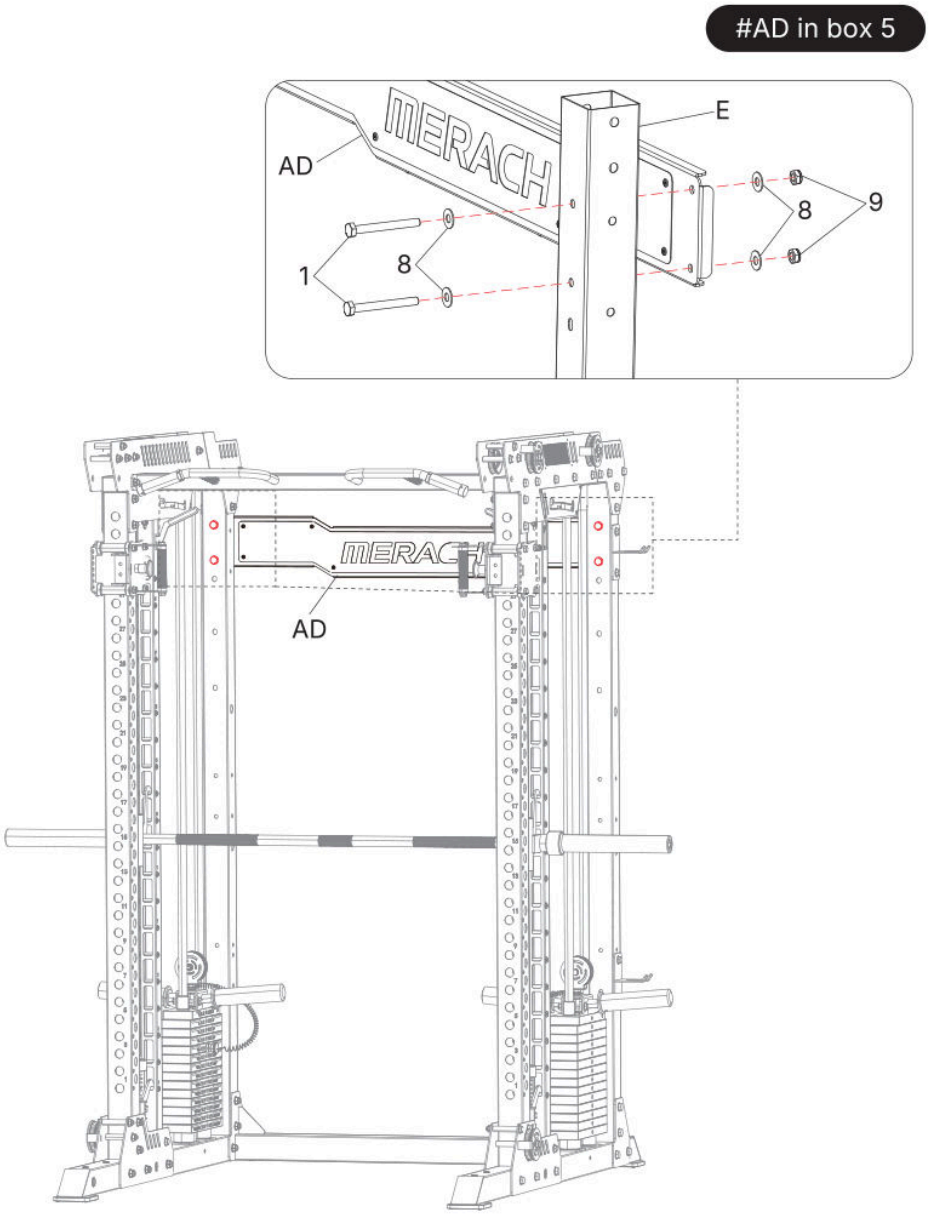

Step 19: Install the Perforated board

1. Remove the pre-installed screws from Perforated board (AE) using Allen wrench (18).
2. Place the Perforated board (AE) directly below the logo plate (AD), close to the rear side of the Rear pillar tube (E), align the holes, insert 6PCS Hexagon Bolt (1) with Flat Gasket (8), then from the other side screw on Flat Gasket (8) and Lock Nut (9). Tighten them with 2PCS 19mm Ratchet Wrench (21).
3. Reinstall the removed screws with Allen wrench (18) to secure the Perforated board (AE) and logo plate (AD) together.

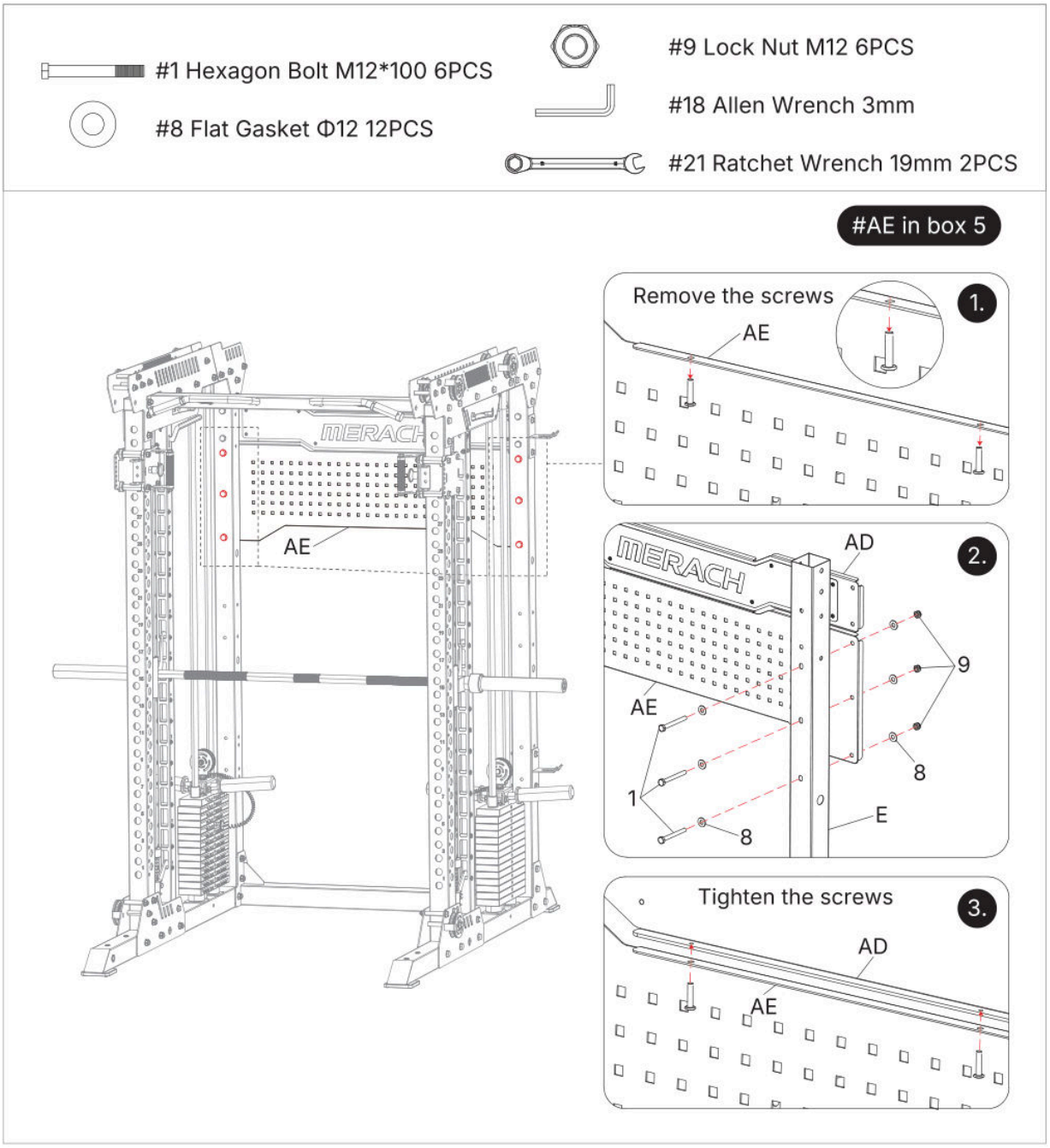

Step 20: Install the Dumbbell Plate Storage Tube

Install 4pcs Dumbbell Plate Storage Tube (AF) on the rear side of the Rear pillar tube (E). Insert Hexagon Bolt (4) with Flat Gasket (10) from one side, then screw on Flat Gasket (10) and Lock Nut (11) from the other side, and tighten using 2PCS 17mm Ratchet Wrench (20) from both sides.

Note: The orientation of Dumbbell Plate Storage Tube (AF) is diagonally upward.

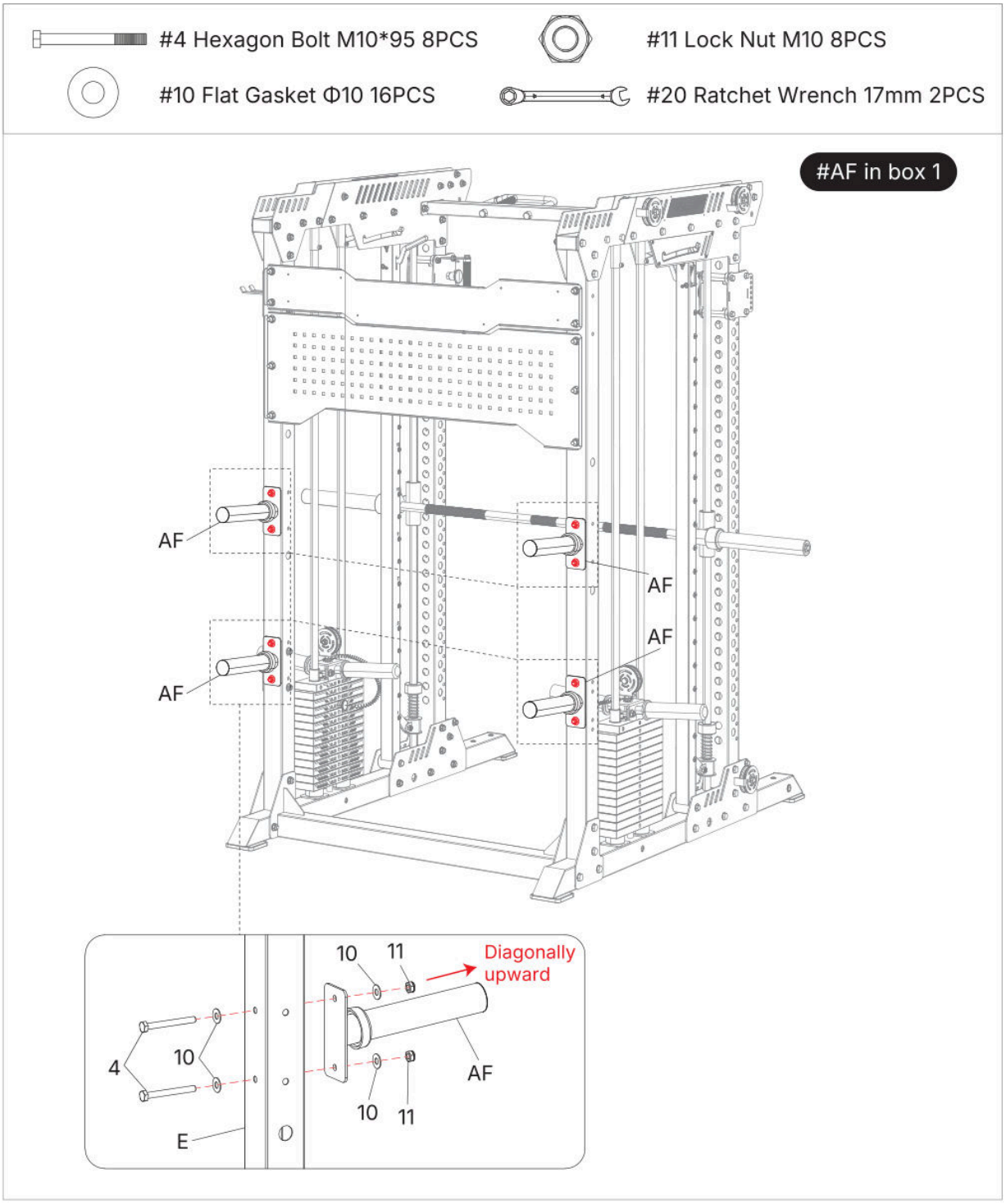

Step 21: Install the 72 Tube sleeve Set

Remove the pre-installed screws with 2PCS 17mm Ratchet Wrench (20) from the 72 Tube sleeve Set (AI). Install the 72 Tubesleeve Set (AI) onto the Pulley Adjustment Assembly (AG). Screw in the removed Hexagon Bolt and Flat Gasket, then screw in Flat Gasket and Lock Nut from the other end, and tighten with 2PCS 17mm Ratchet Wrench (20).

Note: Tighten the screws until there is no gap, do not fully tighten them to allow adjustment of the pulley direction.

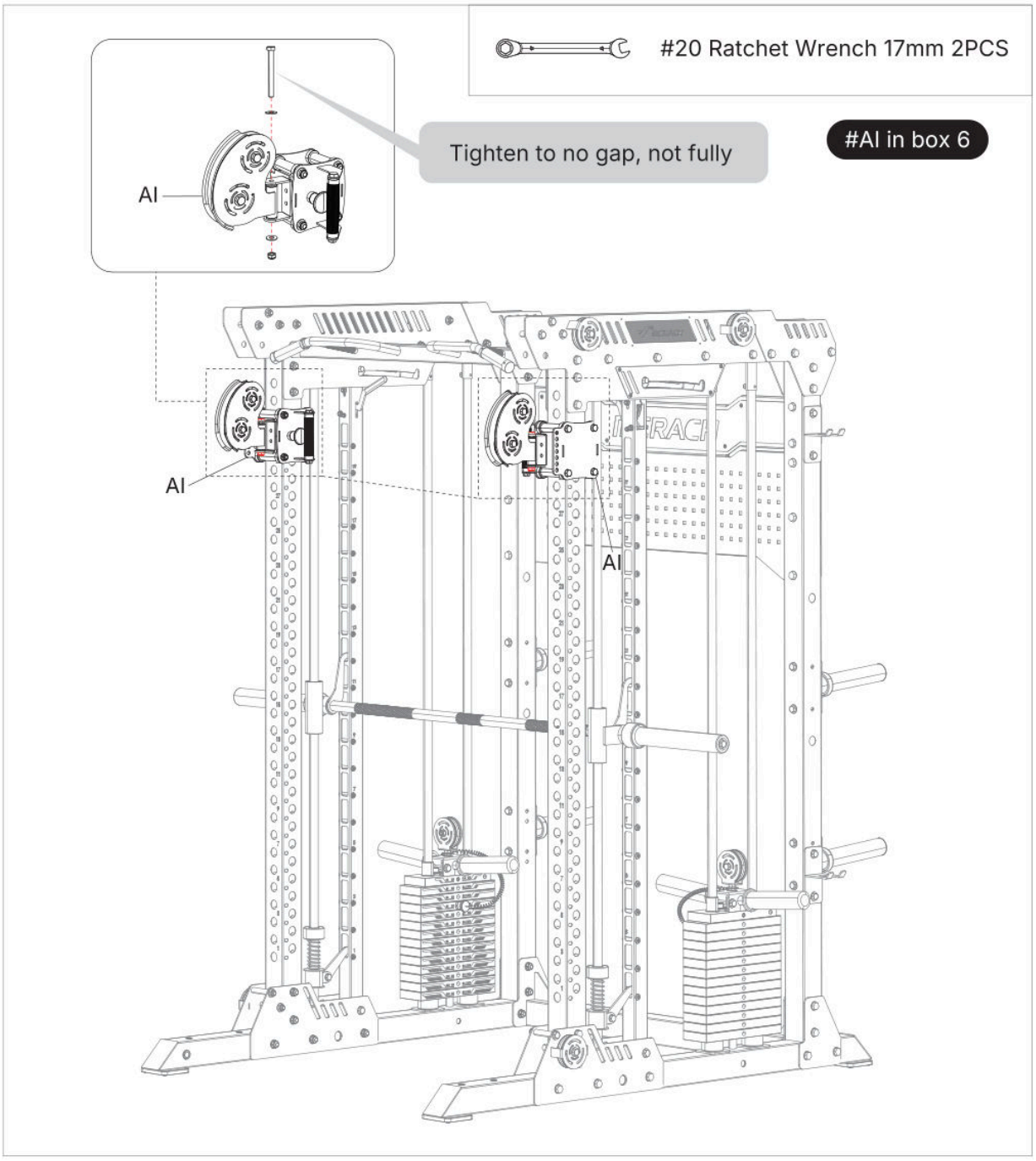

Step 22: Install the Long steel wire rope on the Left

1. To prevent the rope from over-tensioning during installation, raise and secure the first counter weight stack (BL) to reduce its travel distance.
2. Align the looped end of the rope with the hole of the Pulley Adjustment Assembly (AG). Insert 1PC Hexagon Bolt (7) with Flat Gasket (10), then screw on Flat Gasket (10) and Lock Nut (11) from the other end, and tighten with 2PCS 17mm Ratchet Wrench (20).
3. Remove the rope end from one end of the rope. Use a 3mm Allen wrench (18) to unscrew the screw, then remove the black cover and the iron core.
4. Take the end and route it around the pulleys as shown in the figure. If the rope cannot pass through, slightly loosen the screw at the pulley.
5. Thread the rope end out through the pulley of the 72 Tube sleeve Set (AI), and reinstall the cover removed.

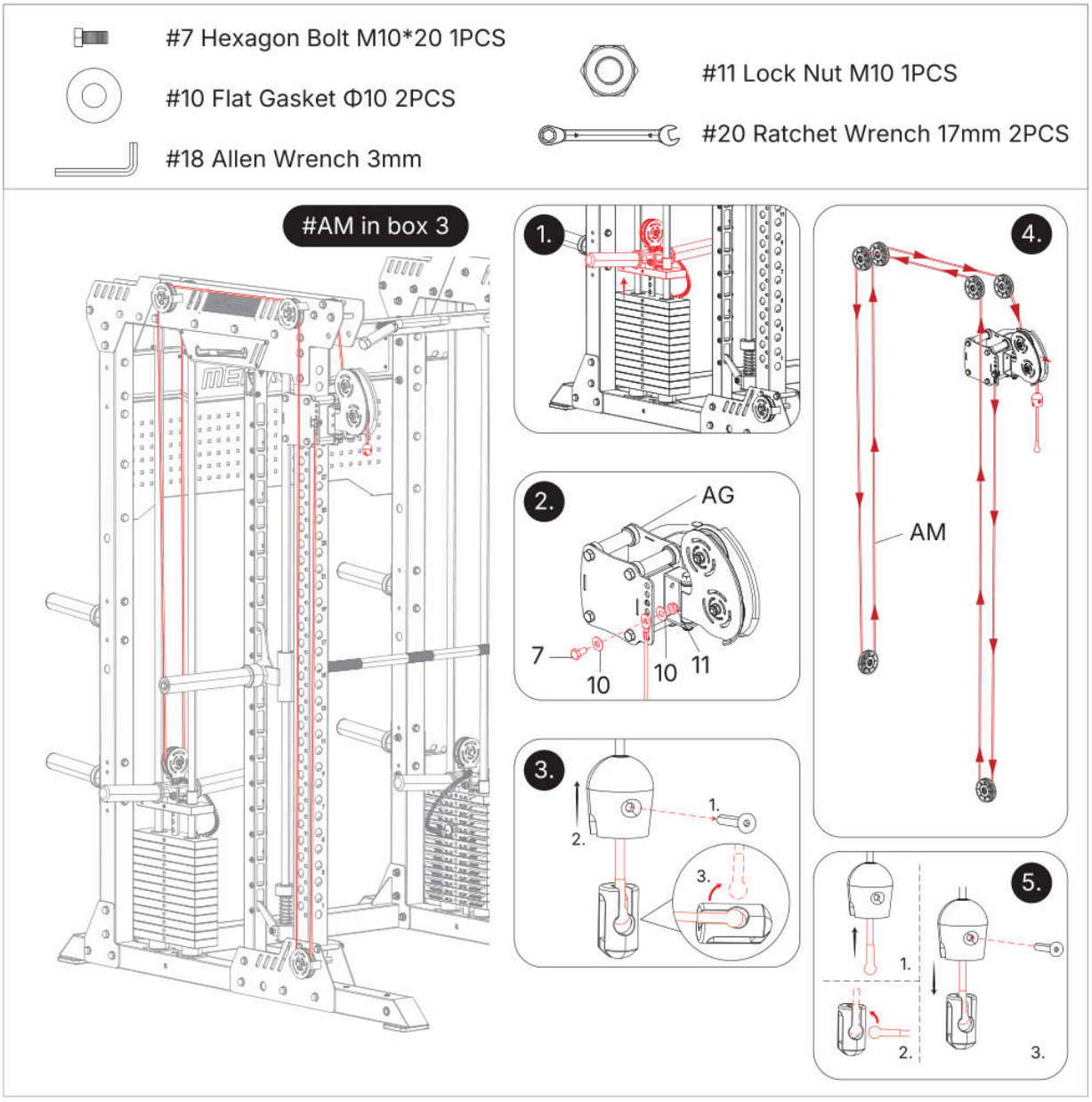

Step 23: Install the Long steel wire rope on the right

The right side is the same as the previous step. Pay attention to the routing direction.

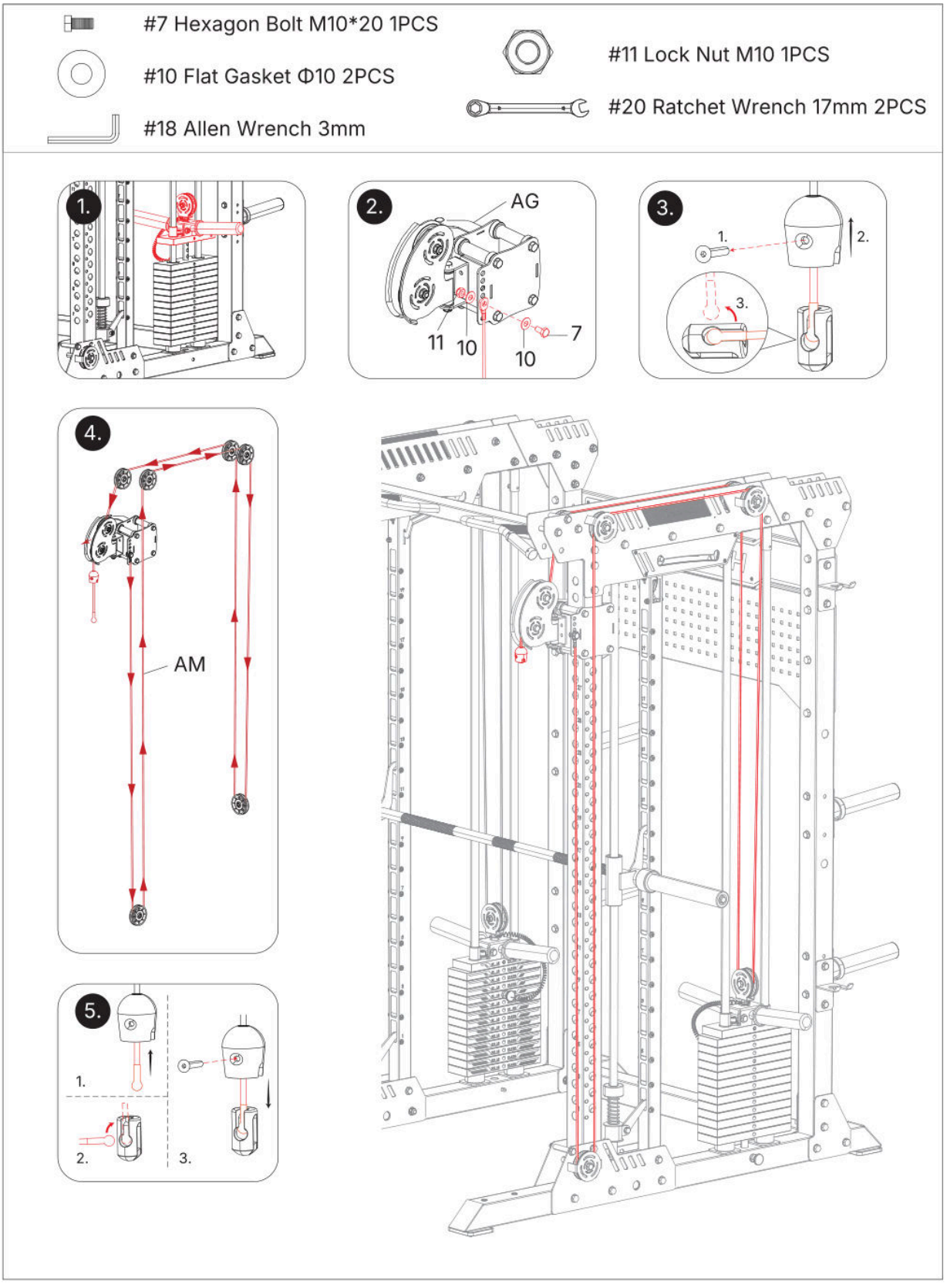

Step 24: Install the Strap pull handle

Attach the Gourd hook (AN) to the end of the assembled Long steel wire rope (AM), then connect the Strap pull handle (AO) to the hook (AN). You can replace any accessory according to your workout needs.

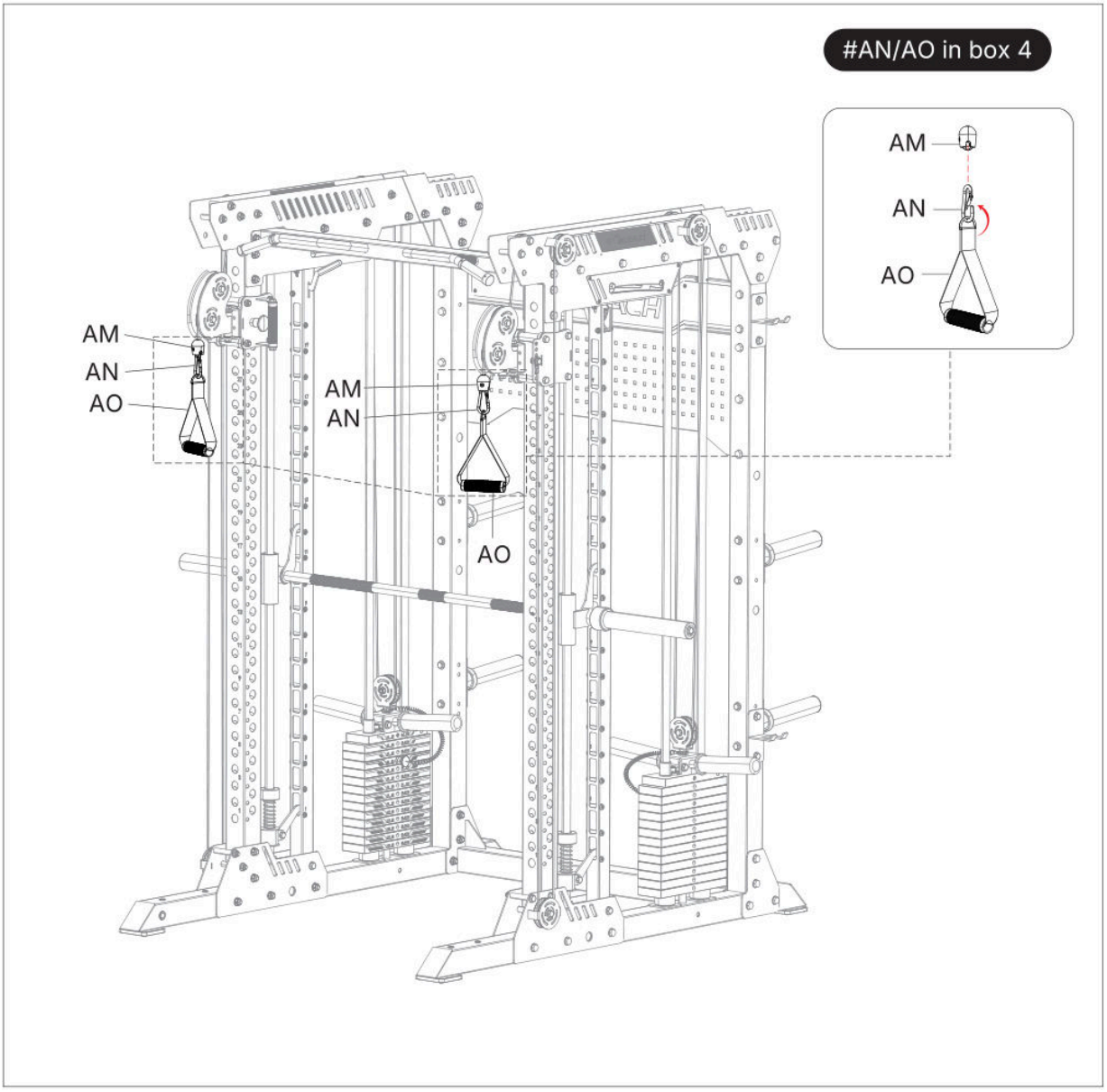

Note:

- Use the 17&19mm Ratchet Wrench to tighten all screws completely including those not fully tightened in previous steps.
- To ensure no screws are missed, tighten all screws in sequence from top to bottom and front to back. After tightening, double-check to confirm none have been overlooked.

Step 25: Install the Left Foot pedal

1. Install the Pedal Adjustment Plate (AJ) onto the Left bottom tube (B). Screw in 2PCS Hexagon Bolt (7) with Flat Gasket (10) and tighten with 1PC 17mm Ratchet Wrench (20).
2. First, remove the pre-installed screw and shaft from the Left Foot pedal (AK). Then install the pedal onto the Left bottom tube (B), insert the shaft, and tighten the screw with the 6mm Allen Wrench (19).

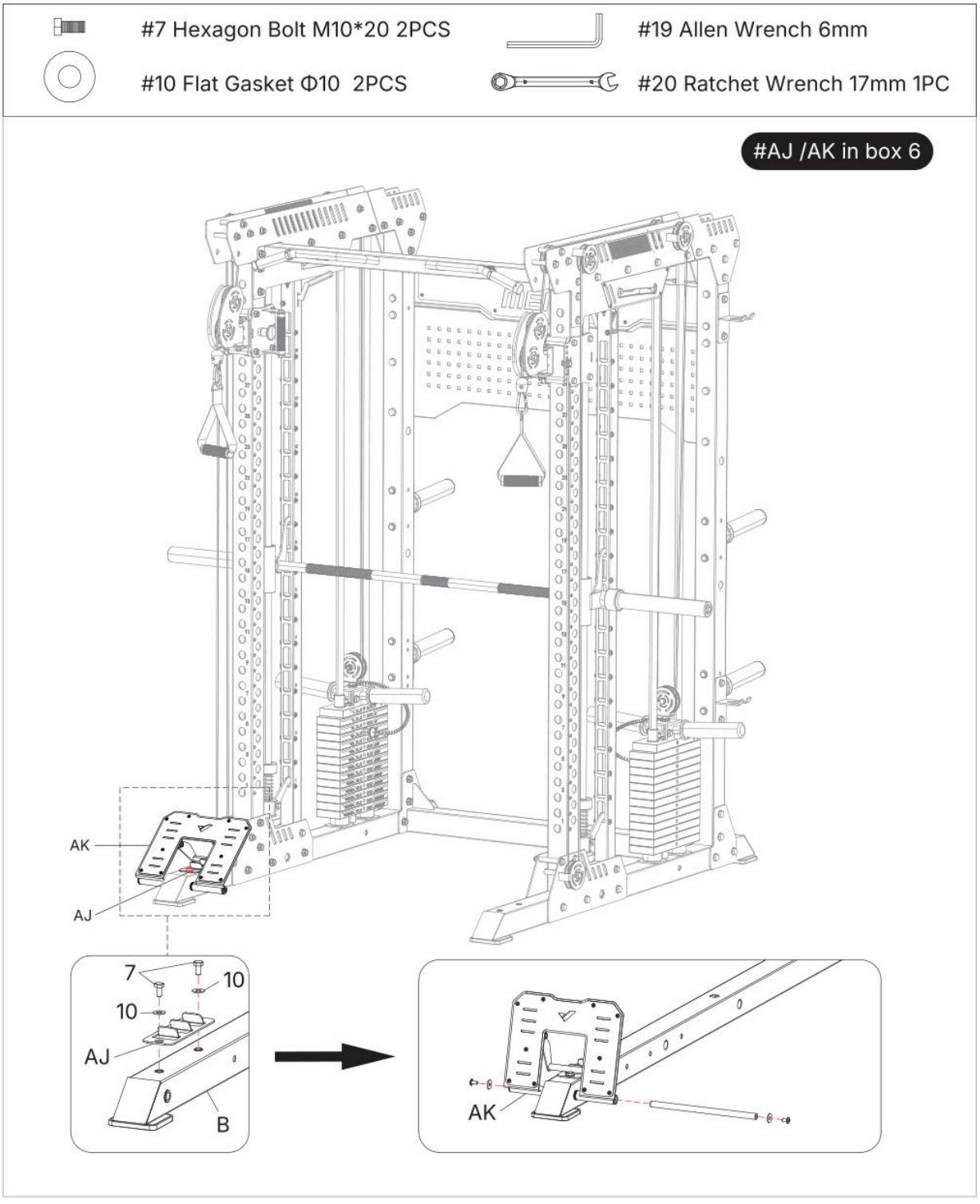

Step 26: Install the Rotary Tube Assembly

Install the Rotary Tube Assembly (AL) onto the Right bottom tube (C). Screw in 2PCS Hexagon Bolt (7) with Flat Gasket (10) and tighten with 1PC 17mm Ratchet Wrench (20).

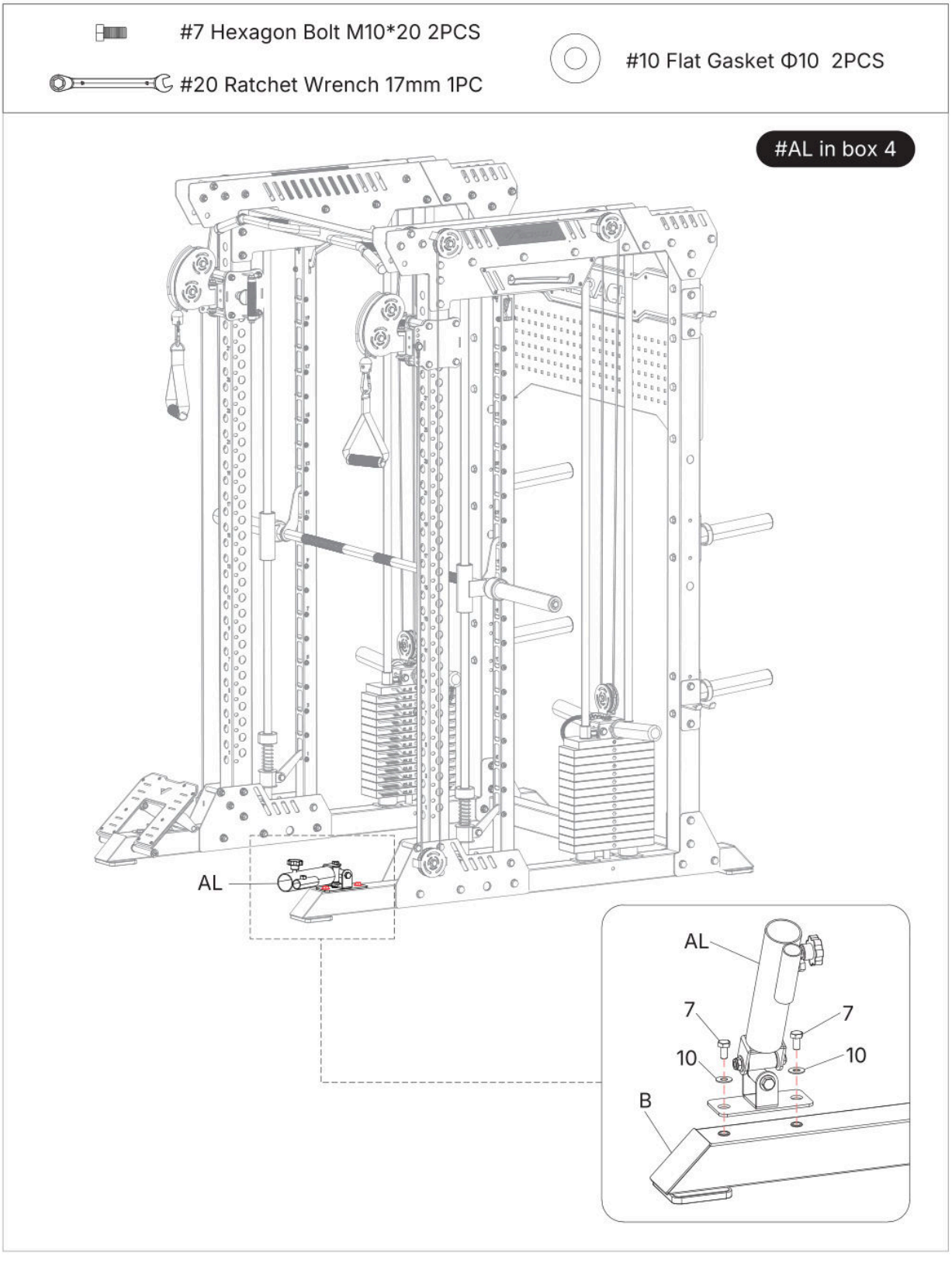

Step 27: Install the Hook Assembly and Horizontal Branch Pipe

Install the hook assembly (AP&AQ) and Horizontal Branch Pipe (AR&AS) onto the Front Pillar Tube (Q) as shown in the figure.

Note: At this time, the horizontal branch pipe (AR&AS) functions as safety arm.

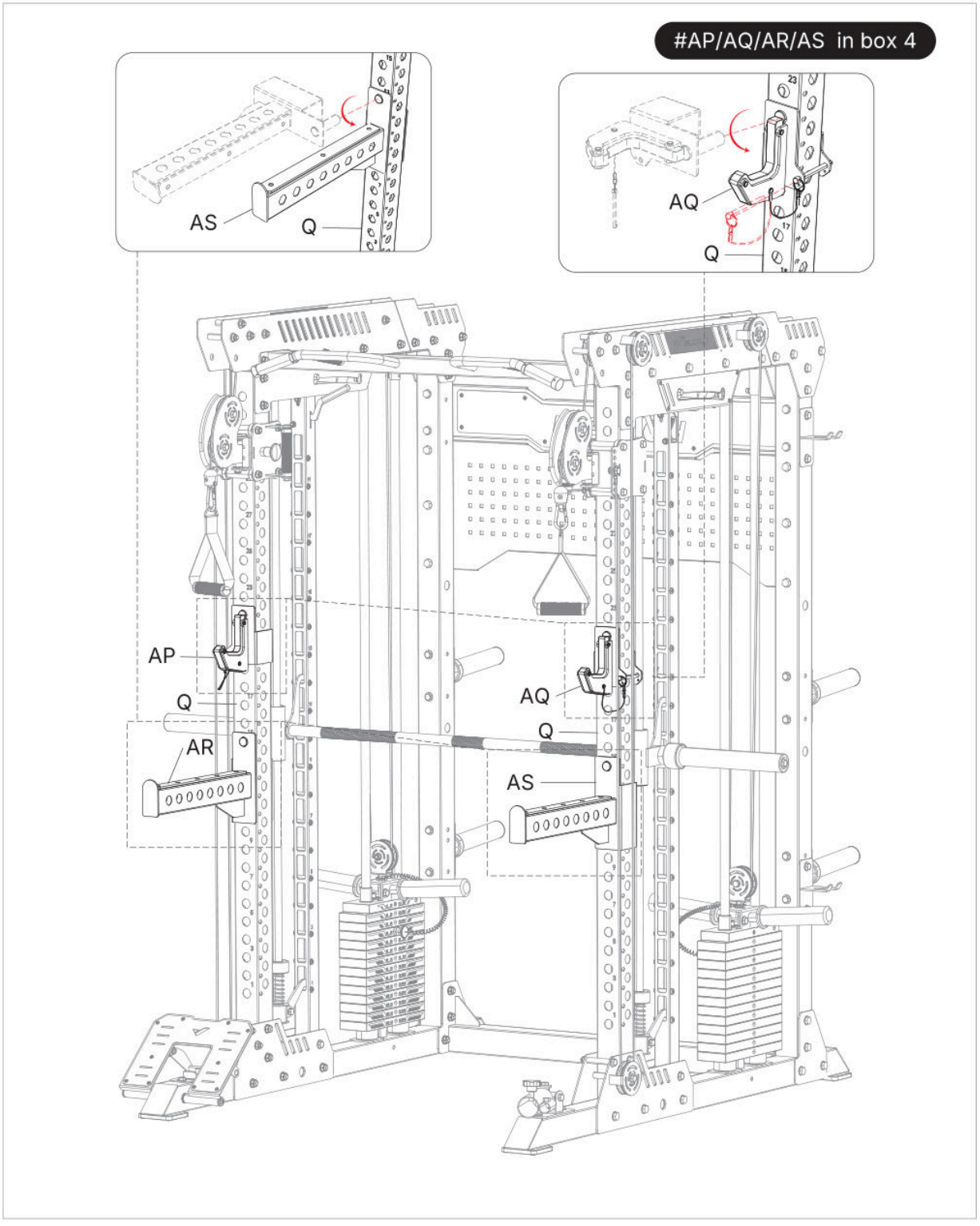

Step 28: Install the Handle tube

1. If you want to use the neutral grip handle, you can install the horizontal branch pipe (AR&AS) on the inside.
2. Unscrew the pre-installed Knob from the Handle tube (AT), and install the Handle tube (AT) into the appropriate hole on the horizontal branch pipe (AR&AS).

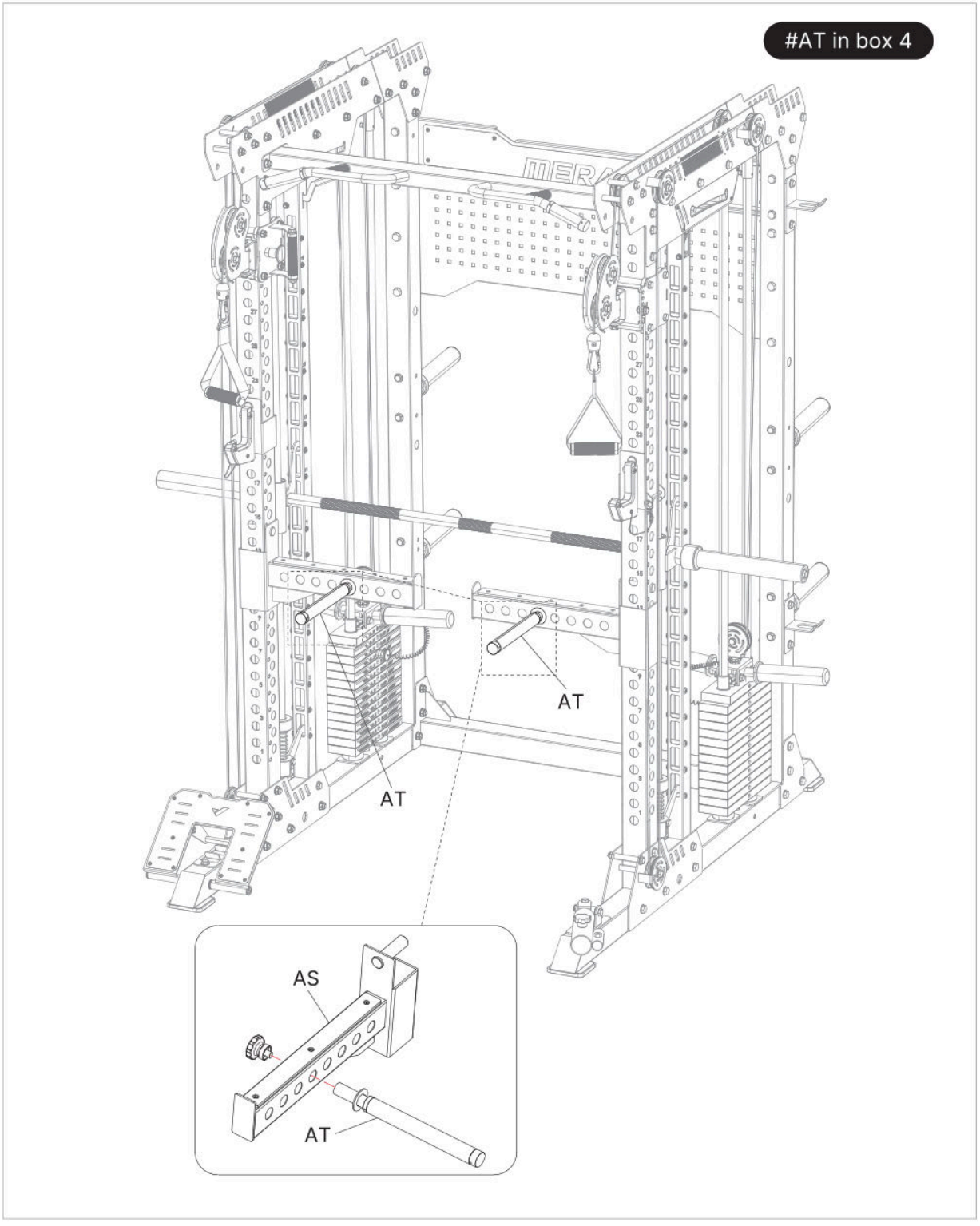

Step 29: Install the Elastic Band Fixing Tube

Install the Elastic Band Fixing Tube (AU) into the hole on the outside of the bottom tube (B&C), and insert the Pin with ring (AV) from the inside to secure.

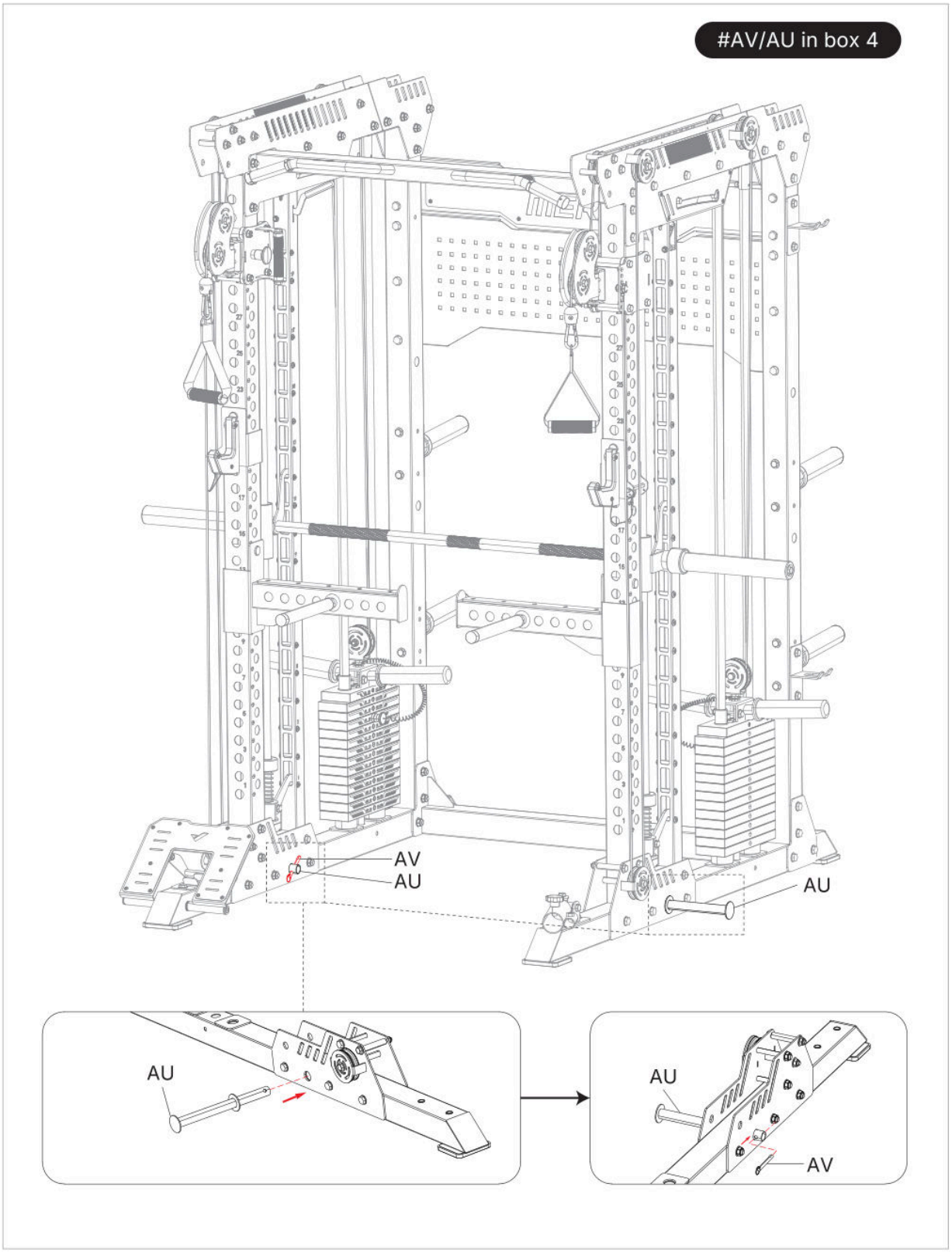

Step 30: Accessory Storage

Hang the Pegboard Hook (BE) on the Perforated board (AE), and hang any light-weight accessories that are not temporarily needed on the Pegboard Hook (BE).

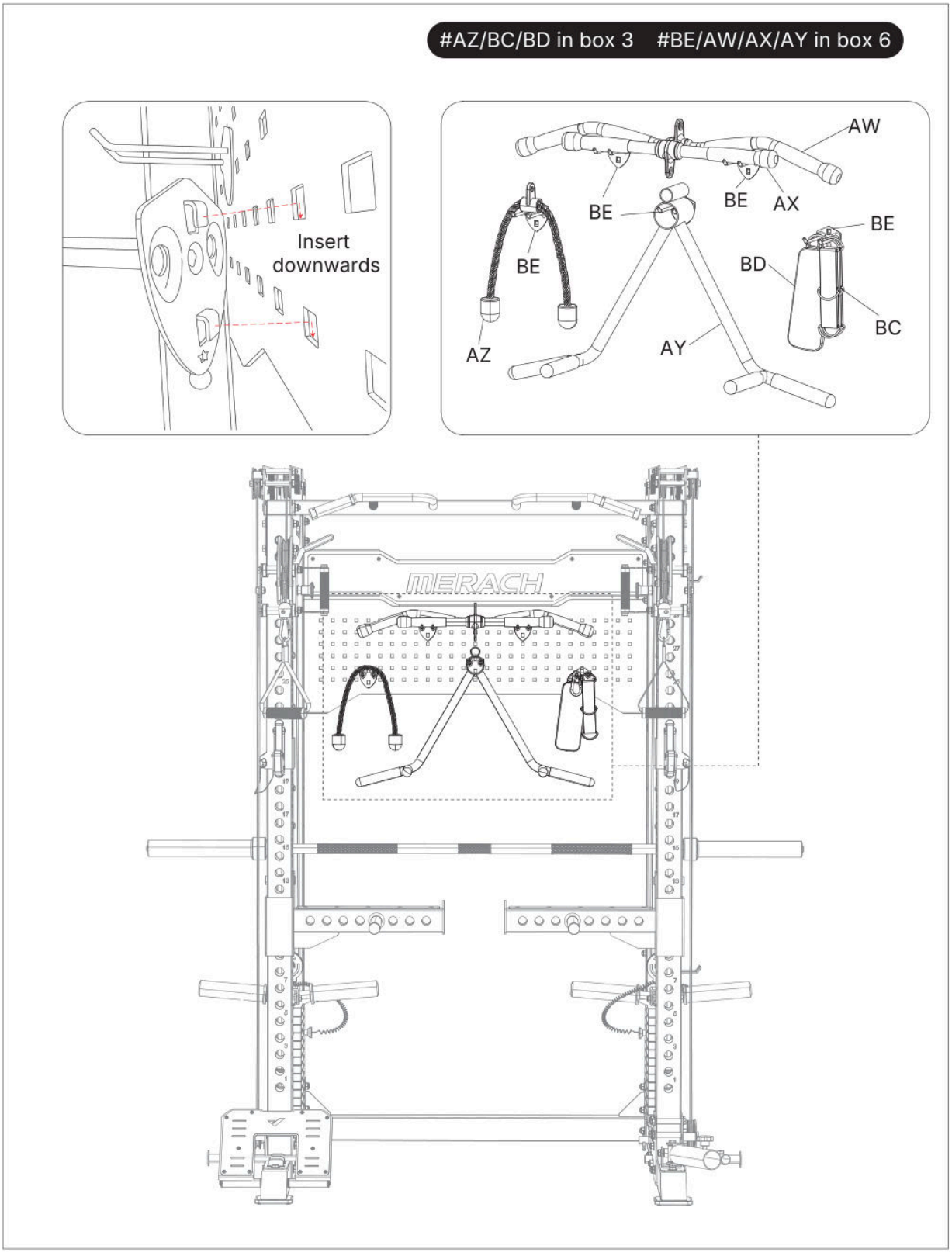

ADJUSTMENT INSTRUCTIONS

1. Adjusting the angle of the Smith machine

Pull the small lever down to move the Neutral Pillar Tube (I&J) along the slide to the other end. There are two angles: 0° and 7°.

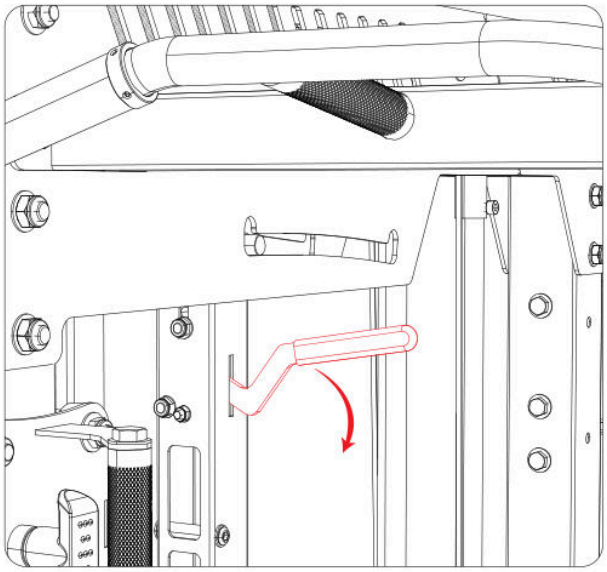

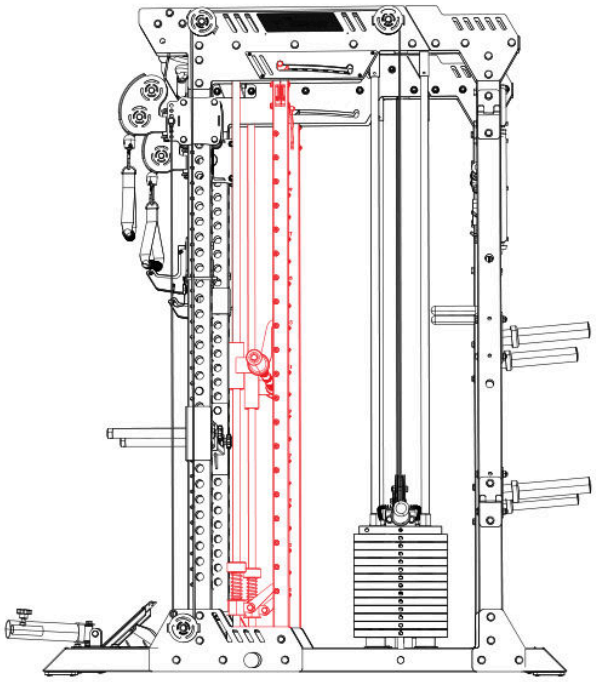

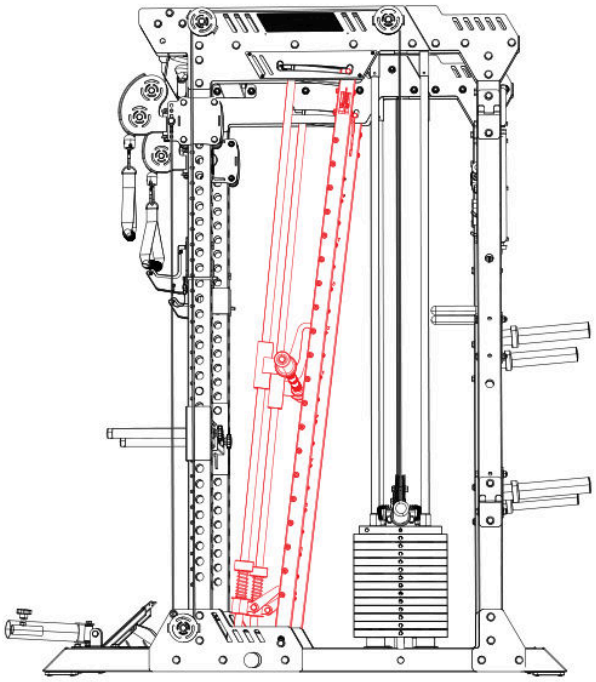

2. Adjusting the Left Foot pedal

The Left Foot pedal has three adjustable angles.

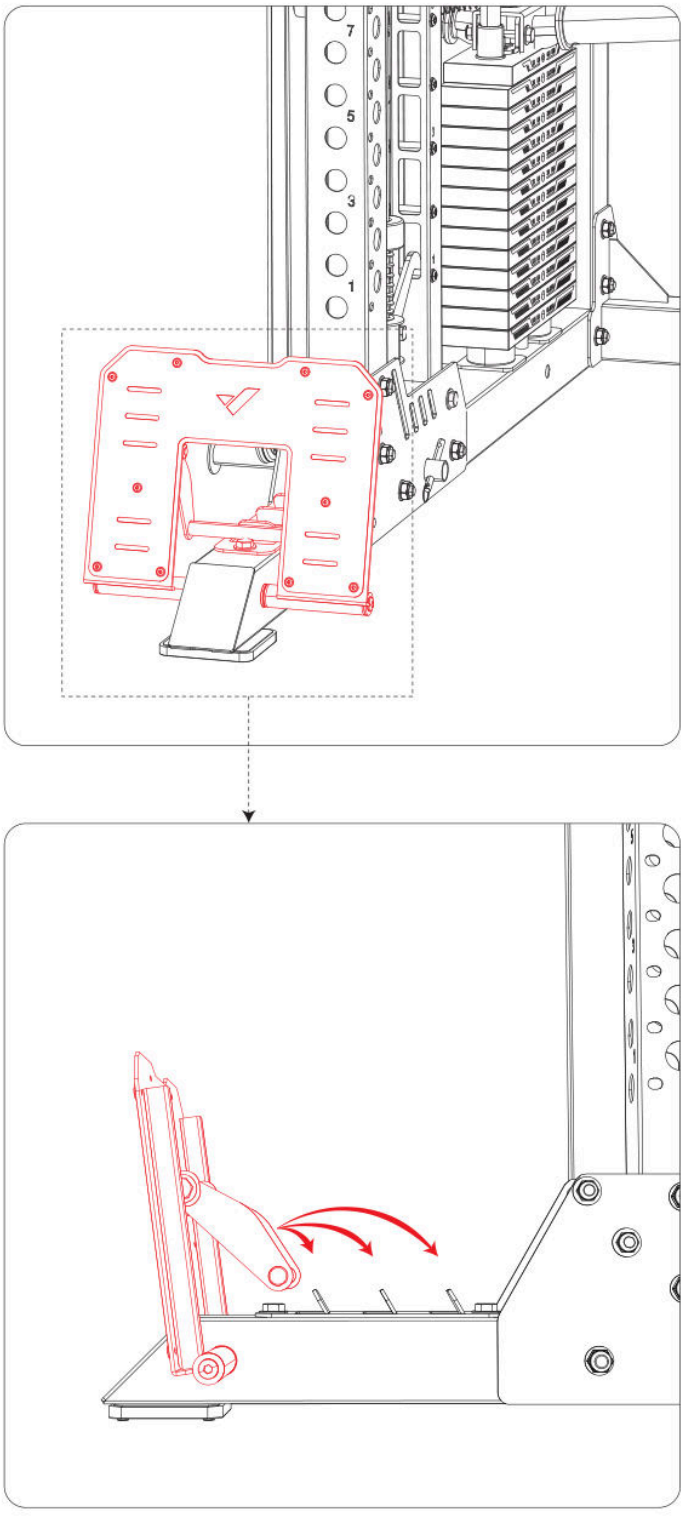

ACCESSORY STORAGE INSTRUCTIONS

The Perforated board can hold lightweight small accessories, while the Rear pillar tube can hold heavier accessories such as J-hooks and safety arms.

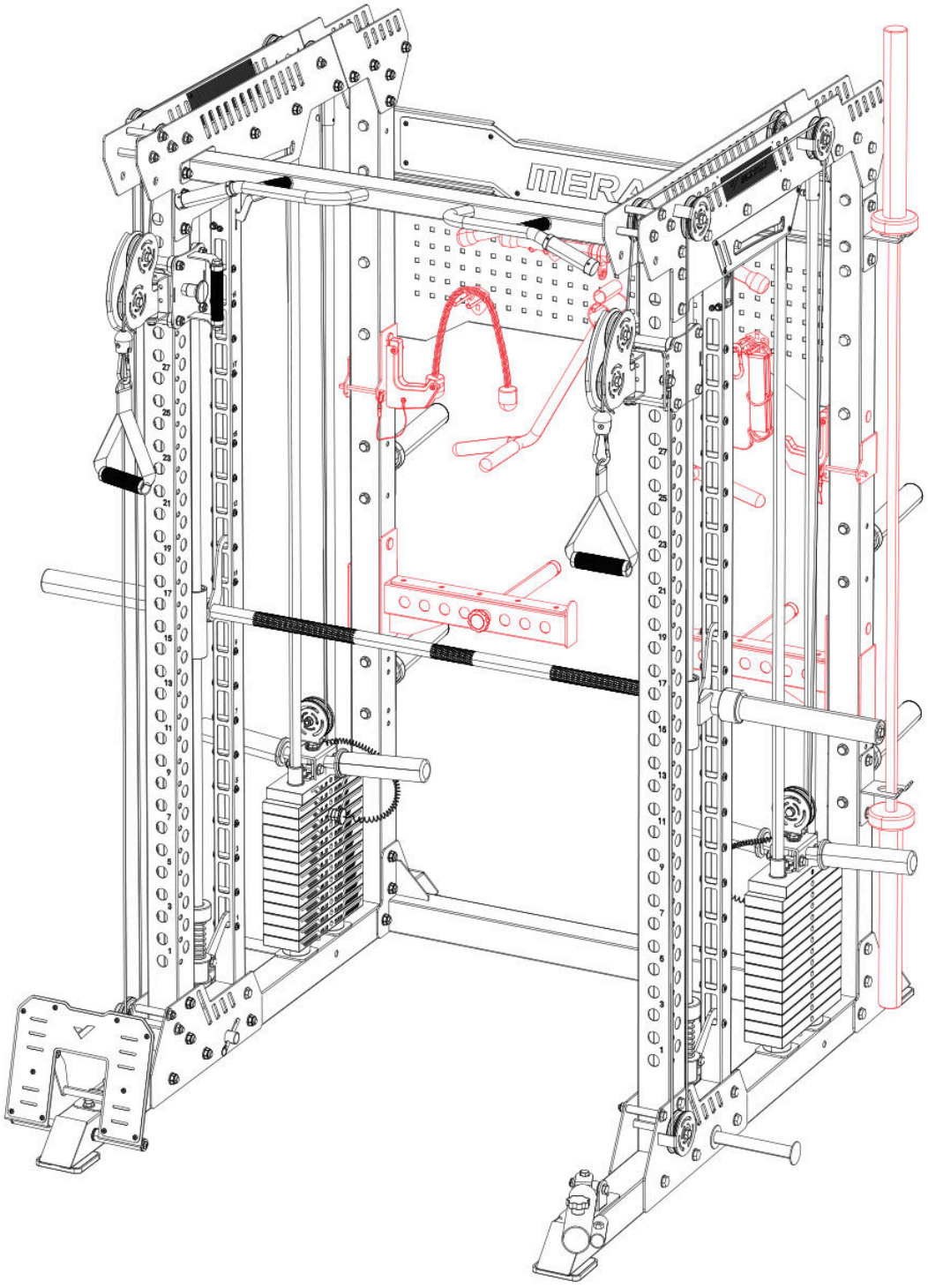

WARM-UP

Do stretches before exercising. Warm muscles are easier to stretch, so start with a 5-10 minute warm-up, then do some stretches shown below - 5 times, 10 seconds or more per leg. Do it again after the workout.

1. Stretch down
Bend your knees slightly, slowly bend your body forward, relax your back and shoulders, and try to touch your toes with your hands. Hold for 10-15 seconds, then relax. Repeat 3 times (see Figure 1).



2. Seated hamstring stretch
Sit with one leg straight. Bring the other leg in so that it is snug on the inside of the straightened leg. Try to touch your toes with your hand. Hold for 10-15 seconds, then relax. Repeat 3 times for each leg (see Figure 2).



3. Calf and Achilles tendon stretch
Stand with both hands against the wall or a tree, put one foot behind another. Keep the back leg straight and your heel on the ground, lean toward a wall or a tree. Hold for 10-15 seconds, then relax. Repeat 3 times for each leg (see Figure 3).

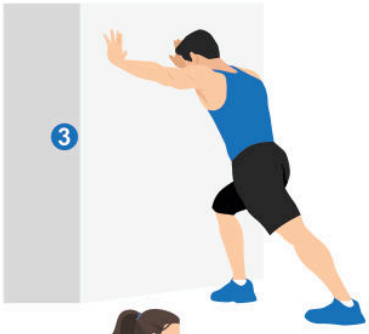

4. Quadriceps stretch
Reach back with your right hand, grab your right foot and slowly pull it toward your hips until you feel a stretch in the front of your thigh. Hold for 10-15 seconds, then relax. Repeat 3 times for each leg (see Figure4).

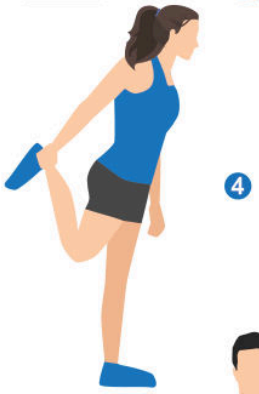

5. Adductor (inner thigh muscle) stretch
Sit with the soles of your feet together and your knees pointing outward.. Grab your feet with both hands and pull toward your groin. Hold for 10-15 seconds, then relax. Repeat 3 times(see Figure5).



WARRANTY INFORMATION

Product Name	MERACH SMITH MACHINE
Model	MR-P16
Default Warranty Period	12 Months
For your own reference, we strongly recommend that you record your order number and date of purchase.	
Date of Purchase	
Serial Number	

Terms & Policy

The MERACH products are premium in material, craftsmanship, and service.
MERACH 1-year limited warranty is effective from the date of purchase.
MERACH will replace defective products based on eligibility. Refunds are available to the original purchasers of our products within the first 30 days of purchase.
This warranty extends only to personal use, doesn't apply to the commercial, rental, or any other uses for which the product is not intended for. There are no warranties other than the warranties expressly set forth with each product.
This warranty is non-transferable. MERACH is not responsible for any damages, losses or inconveniences caused by equipment's failure, user's negligence, user's abuse, or improper operation that does not follow the included user manual.

This warranty does not apply to the following situations:

- Damage due to abuse, accident, alteration or vandalism.
- Improper or inadequate maintenance.
- Damage in return transit.
- Unsupervised use by children under 13 years old.
- MERACH and its subsidiaries are only responsible for damages caused by the intended use or as instructed in the user manual. Some states do not allow this exclusion or limitation of incidental or consequential losses, so the above disclaimer may not apply to you. This warranty gives you specific legal rights and you may also have other rights, which may vary from state to state.

All expressed and implied warranties, including the warranty of merchantability, are limited to the period of the limited warranty.

Additional 12-month Warranty:

You can enjoy an additional 12-month warranty. Just activate your warranty by sending the product's model name via ***register@merach.com*** and enter your order number within the first 14 days of purchase to register your new product for the extended warranty. If you are unable to provide the order number for your product, please type a short note in the order number field along with the date you received your product.

Defective Products:

Should your product prove defective within the specified warranty period, please contact the Customer Support via ***support@merach.com*** with your invoice and order number. ***DO NOT*** dispose of your product before contacting us.

Customer Support

Your satisfaction is our goal! Should you encounter any issues or have any questions about your new product, feel free to contact our Customer Support Team via ***support@merach.com*** or Phone Support:

+1 (833) 529-6620 Mon-Fri 8am-5pm PST
TikTok Shop Exclusive after-sales: ***service@merach.com***

*** Please have your Order ID and serial number (usually on the equipment) ready before contacting Customer Support.**

@Merachfit

@merach

Contact Us: +1 (833) 529-6620 Mon-Fri 8am-5pm(PST) US/CA
Customer Service: support@merach.com
Official Website: merachfit.com