MAYTAG BUILT-IN TALL-TUB DISHWASHER

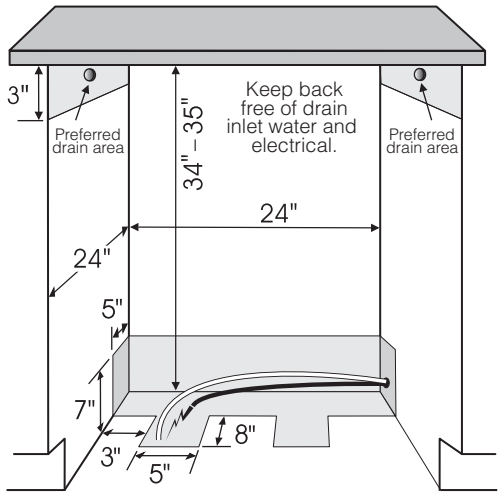

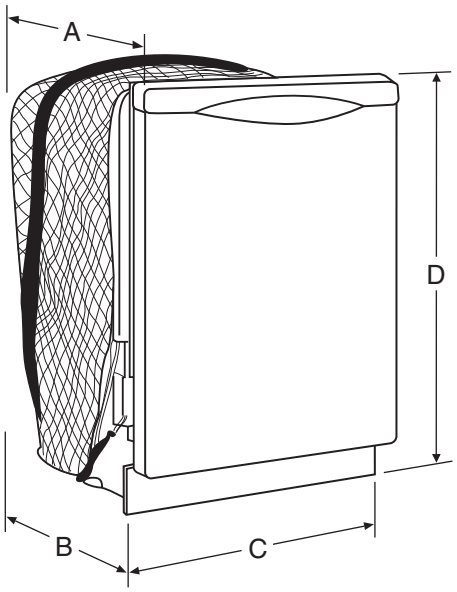

Style of product may vary from picture

PRODUCT DIMENSIONS

	INCHES	CENTIMETERS
A	23 7/8	60.6
B	19 1/2	49.5
C	23 7/8	60.6
D	33 1/2-35 1/4	85.1-89.5

MODEL SKUs

MDB8600AWW
MDB8600AWB
MDB8600AWQ
MDB8600AWS

NOTES:

1. Minimum 32" drain loop, 1/2" inside diameter minimum. Floor drains require a siphon break.
2. Connections preferably located toward left side of dishwasher. Care should be taken to route plumbing away from motor and blower (if equipped).
3. Electrical and plumbing should meet all local and national codes.
4. Electrical and water supplies should enter cabinet opening on the floor, or through the back or side walls, as shown in the shaded area of the drawing.
5. When installing dishwasher in or near a corner, allow enough room for door to open without interfering with cabinet drawers or hardware.

Electrical requirements: Adequately wired individual 120V A/C, 60Hz approved electrical circuit. Use required fuse (15 amp) or comparable circuit breaker.

Important: Because of continuing product improvements, Maytag reserves the right to change specifications without notice. Dimensional specifications are provided for planning purposes only. For complete details see installation instructions that accompany each product before selecting cabinetry, making cutouts or beginning installation.