MANGO POWER

PIPV Quick Installation Guide

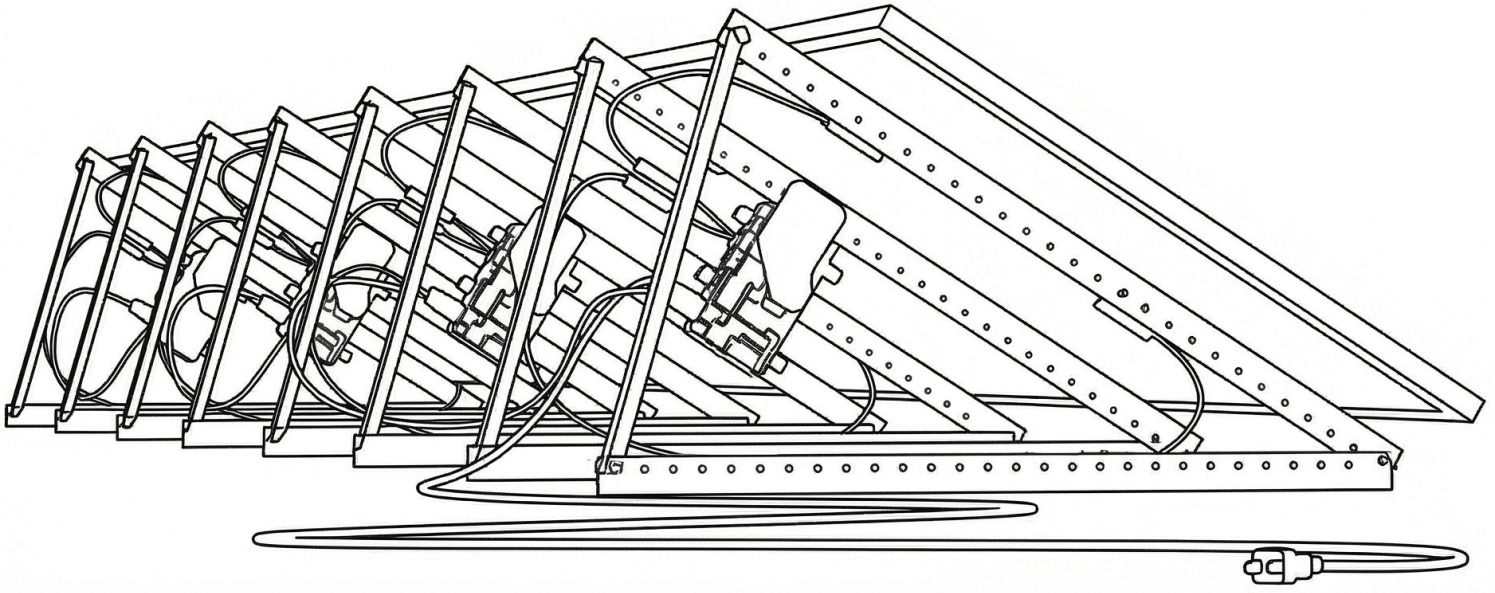

MANGO POWER S Plug-In PV System

120V/1200W

01 Pre-installation Check

A. Install the MANGO POWER APP on Your Phone

Please scan the QR code on the bottom to download the MANGO POWER APP and register an account.
The APP can be used to scan the SN code and complete device pairing.

App Store
App Store
Mango Power

B. Confirm the Installation Location

Select a suitable installation location with a south-facing orientation and no shading. Ensure that the site is free from conditions that may affect operation, including insufficient solar irradiance or ground subsidence.

C. Prepare the Product and Accessories

After unpacking, please carefully check the product and accessories according to this installation manual to ensure all components are complete.

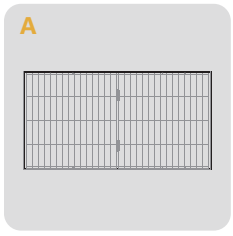

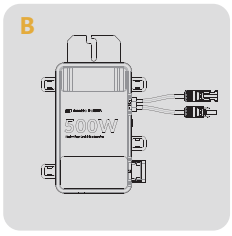

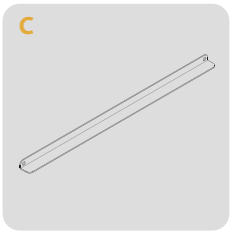

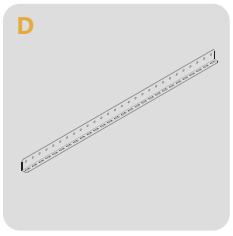

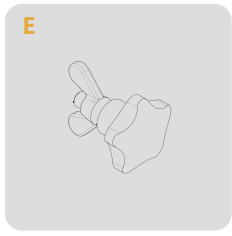

A – PV Module ×1
B – Microinverter ×1
C – Adjustable Support Bar ×2
D – Support Frame ×4
E – Hand-tightening Screw ×7

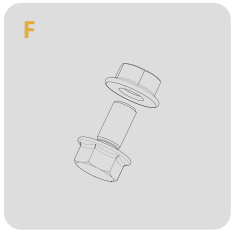

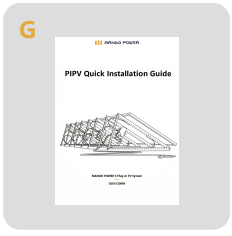

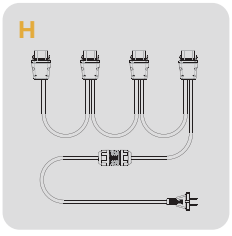

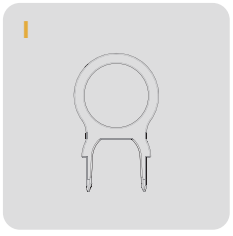



F – Hex Bolt ×4
G – Installation Manual ×1
H – AC trunk cable ×1
I – DC Terminal Disassembly Tool x1
J – AC Terminal Disassembly Tool ×1

Component installation positions are shown in the figure below

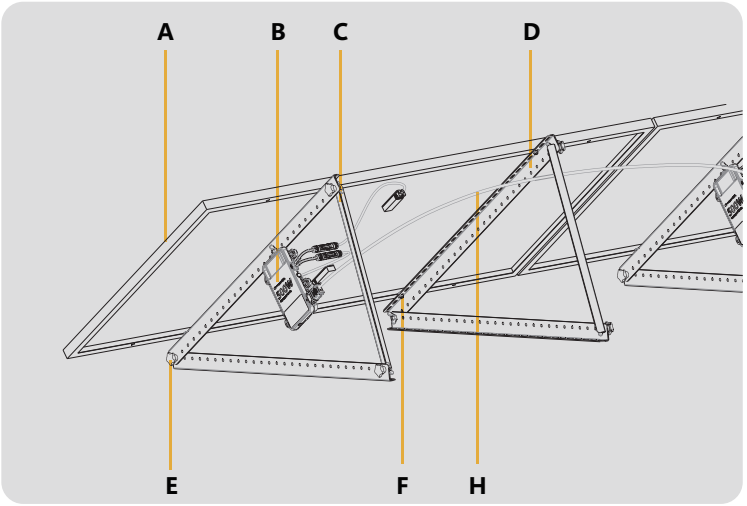

D. Prepare Installation Tools

Please prepare the following tools to meet installation requirements:

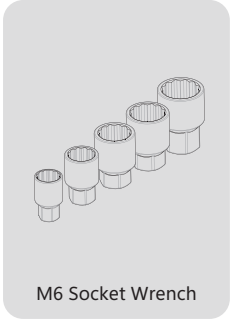
M6 Socket Wrench

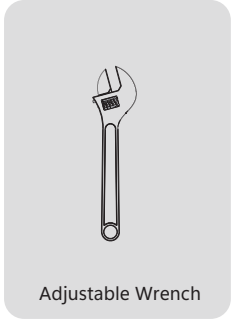
Adjustable Wrench


Cable Ties

E. Product System Diagram

The system diagram is shown below.The Gateway is optional.

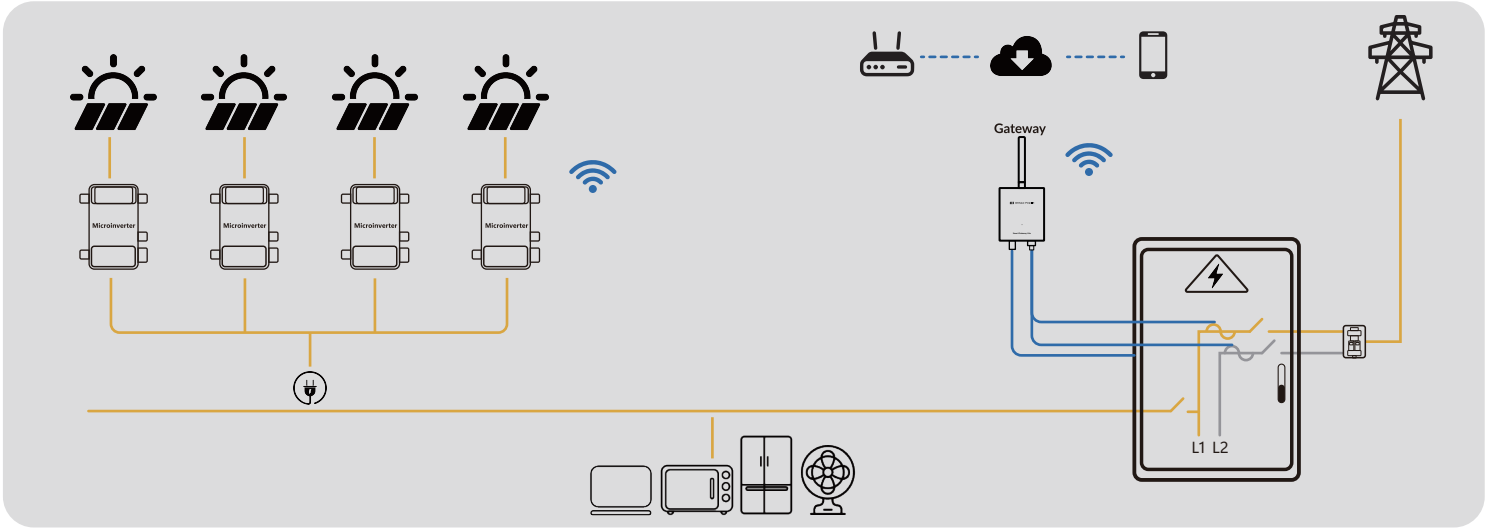

02 Installation Procedure

1. Assemble the Mounting Brackets

1.1 Take two support beams (D) and one adjustable support bar (C) to form a triangular structure.Adjust the angle as required (it is recommended to use the second hole position, as shown below), then manually tighten the hand-tightening screws (E) clockwise.

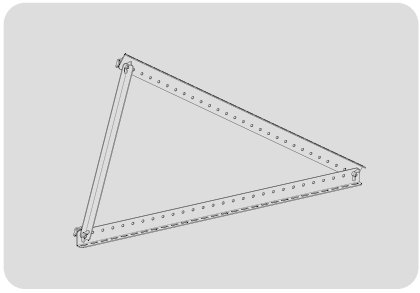

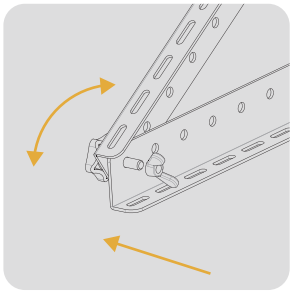

1.2 Assemble the second mounting bracket following the same procedure described in Step 1.1.

2. Secure the Mounting Brackets to the PV Module

2.1 Place the PV module with the rear side facing upward, as shown below.Use the hex bolts (F) to secure the mounting brackets to the PV module (A).After assembly, position the PV module properly.

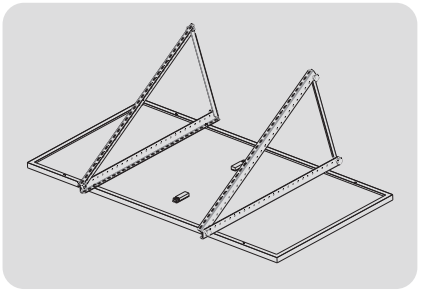

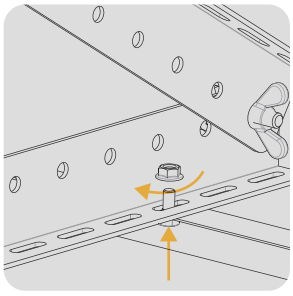

It is recommended to fasten the hex bolts to the third slot of the support beam (D).

Ensure that the relative positions of the two mounting brackets are aligned both vertically and horizontally to prevent tilting of the PV module.

3. Secure the Microinverter

3.1 Use the hand-tightening screws (E) to secure the microinverter (B) to the upper position of the support beam (D).

- Ensure that the microinverter status indicator faces outward.

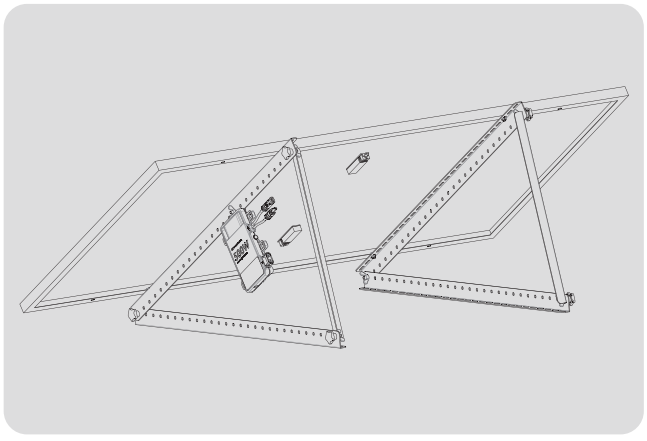

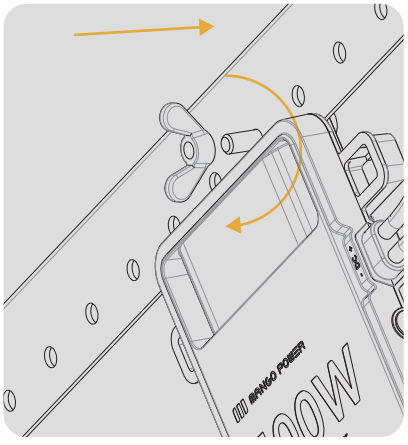

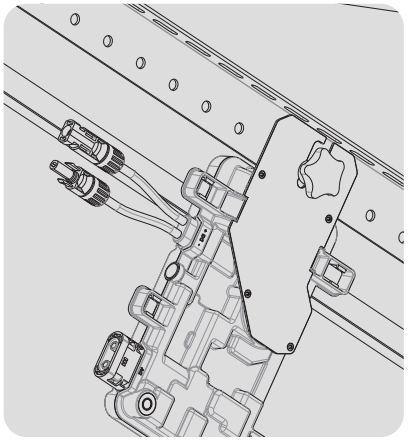

- When installing multiple PV modules, ensure that the positions of the microinverters are as consistent as possible.
- To facilitate cable routing and management, do not install the microinverter too close to the upper edge.

4. Connect the Cables

4.1 AC Connection：After securing all microinverters (B) to the PV modules, use the AC trunk cable (H) to connect the AC output ports of each microinverter sequentially.

4.2 DC Connection：Insert the MC4 connectors of the PV module into the corresponding DC input connectors of the microinverter (B).

4.3 Cable Management：Use cable ties to secure the cables to the mounting brackets.Ensure that all cables are suspended and do not come into contact with the ground.

4.4 Grid Connection：Insert the extended end of the AC trunk cable (H) into a nearby AC power outlet.

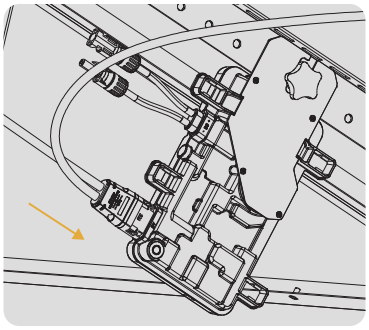

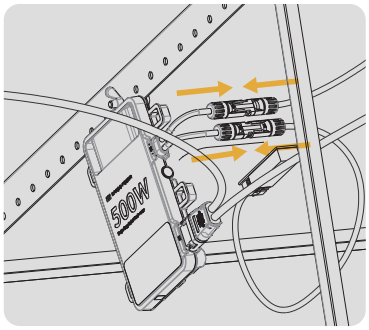

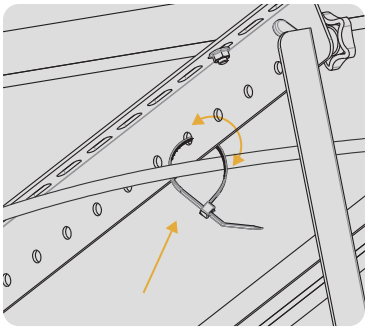

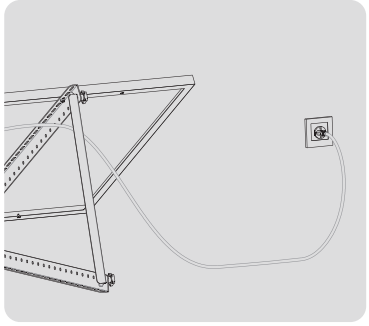

- The AC trunk cable has no polarity requirement and may be connected in either orientation.
- No additional grounding is required for the system.
- Depending on the actual installation environment, the PV mounting brackets can be secured by weighing them down with sandbags or stones, or fastened to a rigid concrete floor using self-tapping screws.

03 System Commissioning

1. Create the Microinverter SN Layout Map

Remove the SN labels from each microinverter.
Affix the SN labels to the SN layout map according to the actual installation sequence.

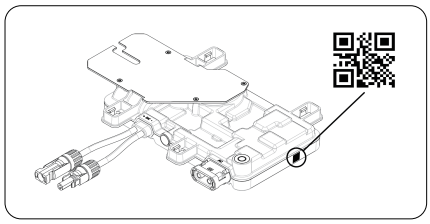

Mark North	1	2	3	4

2. Register and Log In to the MANGO POWER APP

2.1 Account Registration: Enter a email address → enter the verification code received by email → tap Send Verification Code → tap Register to complete account registration and log in.

2.2 Account Login:

A. Email and Password Login: Enter your email address and password, select your region, and then tap "Sign In".

B. Third-Party Account Login: Select your region, tap the Other sign-in options icon, and then confirm authorization to complete registration and login.

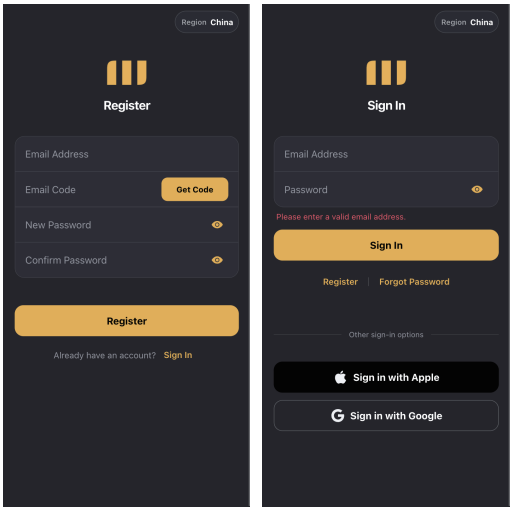

3. Create a Power Station

Tap "Add site".Enter the basic information of the power station, including the station name, time zone, and owner's email address.Tap "Save".

- The owner's email address must be valid. The owner logs in to the APP using this email address to view the power station.

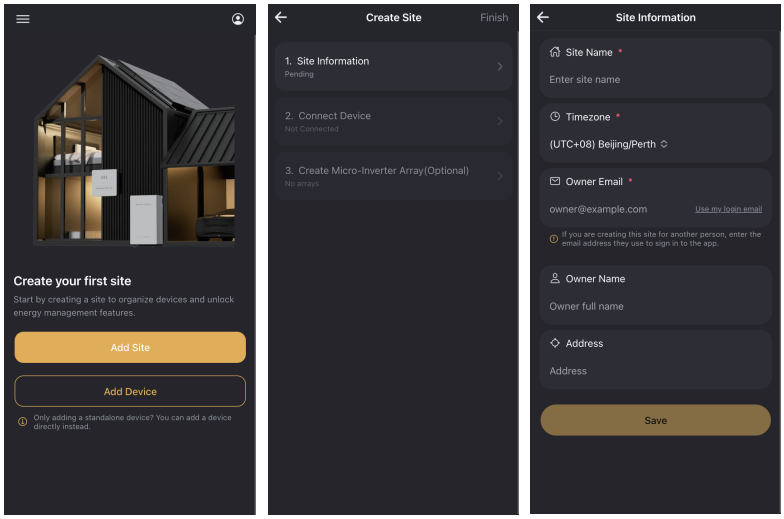

4. Create a Device Group

Tap "Add Device" ; On the pop-up page under "Bluetooth Devices", select the first device and choose "Create a new group" ; Enter a custom name in "Device Group Name", then tap "Save";

On the Connect Device page, enter the SSID and password of the home Wi-Fi network to configure network access for the device group.

- Before performing this step, ensure that Bluetooth on the mobile phone is enabled.

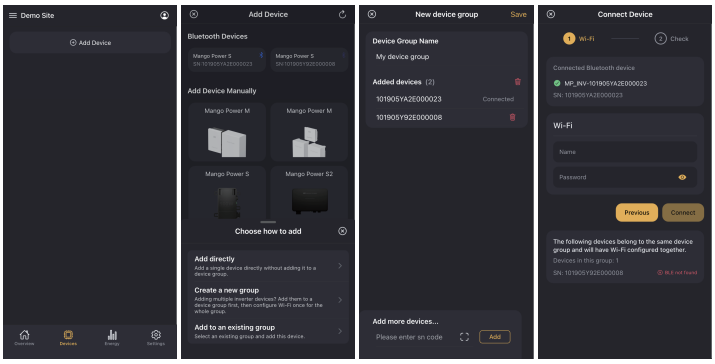

5A. Install and Enable Smart Gateway Lite

Tap the Setting button on the right side of the device group name to enter the device group settings page.
Tap Gateway SN. Scan the QR code or manually enter the Gateway SN, then tap "Bind".

The primary function of the Smart Gateway Lite is to monitor microinverter power generation and prevent power from backfeeding into the utility grid. In states without dedicated PIPV legislation—where power backfeed to the grid is restricted, this device must be installed to enforce zero-export control.

For detailed installation procedures for the Smart Gateway Lite, please refer to the MANGO POWER Smart Gateway Lite User Manual included in the product box.

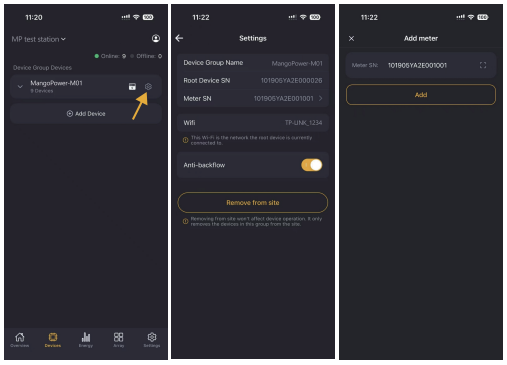

03 System Commissioning

5B. Disable Anti-backflow Function (Without Smart Gateway Lite)

For regions where an anti-reverse current function is not required, the Smart Gateway Lite does not need to be installed; however, the anti-backfeed current function must be manually disabled.

Tap the Setting button on the right side of the device group name to enter the device group settings page.
Tap “Anti-backflow”, then tap “OK” in the pop-up window.
Wait a few seconds until the function is successfully disabled.

• The anti-reverse current function is enabled by default.

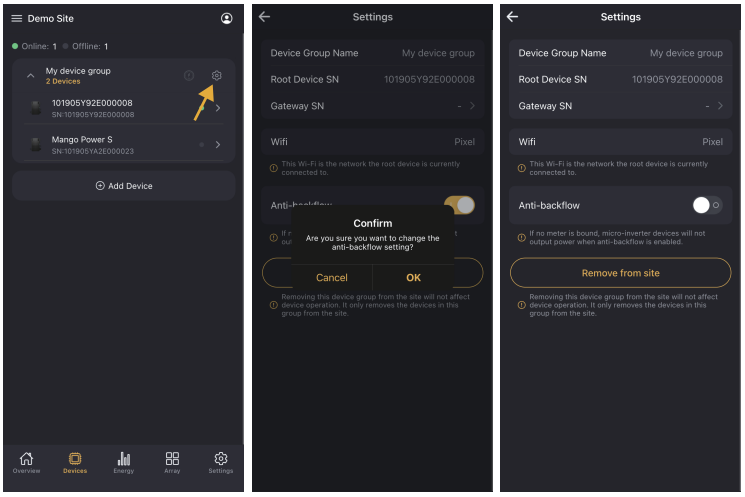

6. Configure Module Layout (Optional)

On the home page, tap “Array”, then tap “+New array” in the lower-right corner.
Tap any grid cell. In the pop-up window, select the device SN and tap “Assign Device”.
After all devices have been configured, tap “Save” in the upper-right corner.

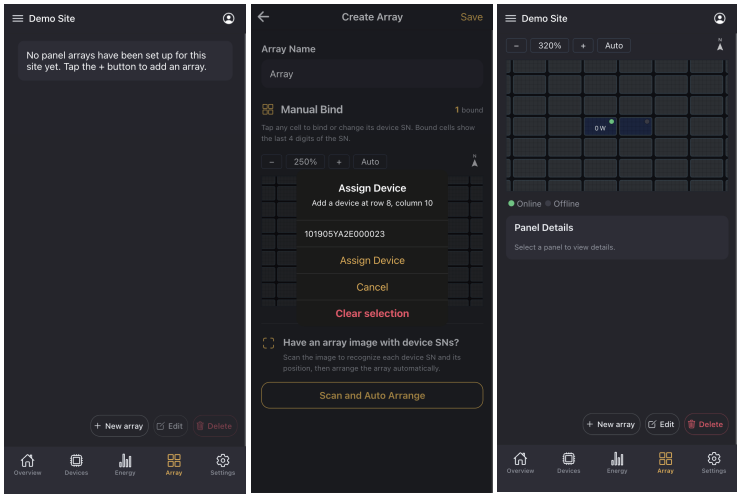

7. Installation Complete

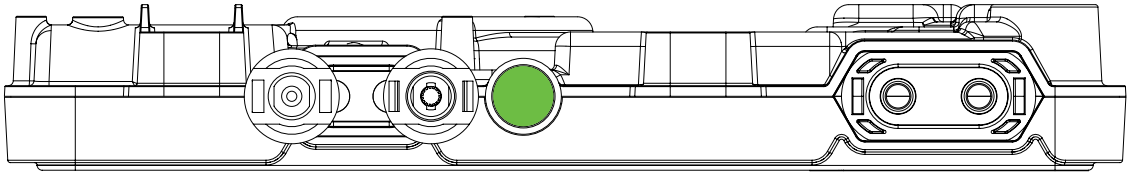

LED Indicator Status

	LED indicator		Description
Green Light	Steady Green Light (Duration 5s)		Microinverter installation environment check in progress
	Slow Flashing Green Light (Interval 2s)		Generating power
	Fast Flashing Green Light (Interval 1s)		Generating power, but microinverter is offline
Red Light	Steady Red Light (Duration 6s)		Microinverter self-check in progress
	Slow Flashing Red Light (Interval 2s)		Abnormal connection with the AC grid
	Fast Flashing Red Light (Interval 1s)		Abnormal connection with the AC grid,microinverter is offline
	Steady Red Light		DC side malfunction
Other	Alternating Red and Green Lights (Interval 1s)		Microinverter is upgrading
	No lights on		PV modules not supplying power

Warranty Card

Warranty Policy

MANGO POWER products and accessories purchased from authorized platforms come with a limited warranty.
The warranty period is measured starting on the date the original purchaser receives the products.
Customer should provide the invoice or relevant purchase proof when filing a warranty claim at our official website: www.mangopower.com

Warranty Period

Product	Warranty Period(Years)
PIPV system	25
Accessories	3

Valid Proof of Purchase

- Order No. of purchases made through mangopower website: www.mangopower.com
- Sales invoice or order confirmation of the product, price and sales channel.
- Visible proof （e.g.Short video） depicting the defect will be required.

How To Claim Your Warranty

For any product defects not caused by the consumer, please feel free to contact the customer service team.
Service email: service@mangopower.com

Warranty Exclusions

MANGO POWER'S warranty DOES NOT apply to:

- Misused/abused/damaged by accident or mishandling due to acts of nature. （For example, lightning strikes, tornadoes, hurricane ect.)
- Unauthorized modification/ repair/ dis-assembly or operation not in accordance with the official instructions or manuals.
- Non-quality related issues.
- Items purchased from unauthorized resellers
- Not able to provide valid proof of purchase

How To Return/ Replace/ Repair

- Contact us for a Return Merchandise Authorization （RMA） Number. MANGO POWER will not accept returned items without prior authorization and RMA.
- Write the RMA number on the shipping label outside the package.
- Send the defective product to our local warehouse.


MANGO POWER