LOWRANCE

SIMRAD

FreeSteer® Joystick Remote

Operation manual

English



Scan to save

lowrance.com

simrad-yachting.com

Copyright

©2026 Navico Group. All Rights Reserved. Navico Group is a division of Brunswick Corporation.

Trademarks

®Reg. U.S. Pat. & Tm. Off, and ™ common law marks. Visit **www.navico.com/intellectual-property** to review the global trademark rights and accreditations for Navico Group and other entities.

- Navico® is a trademark of Navico Group
- Lowrance® is a trademark of Navico Group
- Simrad® is a trademark of Kongsberg Maritime AS, Licensed to Navico Group
- ActiveTarget® is a trademark of Navico Group
- Recon™ is a trademark of Navico Group
- Scout™ is a trademark of Navico Group
- Ghost® is a trademark of Navico Group
- FreeSteer® is a trademark of Navico Group
- Bluetooth® is a trademark of Bluetooth SIG, Inc
- NMEA® and NMEA 2000® are trademarks of the National Marine Electronics Association
- Power-Pole® is a trademark of JL Marine Systems, Inc
- QR code® is a trademark of Denso Wave Incorporated

Warranty

This product's warranty is supplied as a separate document.

Safety, disclaimer and compliance

This product's safety, disclaimer and compliance statements are supplied as a separate document.

More information

Document version: 001

Features described and illustrated in this guide may vary from your unit due to continuous development of the software.

For the latest version of this document in supported languages, and other related documentation, visit:
www.lowrance.com/downloads/scout, **www.lowrance.com/downloads/recon**, or **www.simrad-yachting.com/downloads/recon**.

Contact us

For product support and service information, visit **www.lowrance.com/contact-us** or **www.simrad-yachting.com/contact-us**.

CONTENTS

4 Introduction
4 In the box
5 Insert batteries
5 Turn on remote
6 Connect remote to trolling motor
6 Navigate menus
6 Pairing
6 Unpair devices connected to trolling motor
7 Settings for the remote
8 Remote keys
9 LCD screen and status bar
10 Soft key
11 Lock remote
11 Unlock remote

12 Set up the trolling motor
12 Trolling motor calibration
12 Trolling motor settings

13 Drive the trolling motor
13 Engage/disengage propeller
13 FreeSteer steering
14 Traditional steering
14 Adjust speed
15 Cruise Control

16 Trolling motor modes
16 Stop a mode
16 Pause propeller within a mode
16 Autopilot modes
17 Anchor lock mode

19 Trolling motor navigation functions
20 Create waypoint
20 Go to waypoint
20 Delete waypoint
20 Record a trail
21 Follow recorded trail (route)
21 Delete recorded trail (route)
21 Stop navigation

22 Configurable keys
22 Assign functions to keys on FreeSteer Joystick Remote
23 Assign functions to keys on Advanced Wireless Foot Pedal

24 Software
24 View software versions and serial numbers
24 Restore remote's default settings
24 Trolling motor factory reset

25 Dimensions

25 Technical specifications

INTRODUCTION

The FreeSteer Joystick Remote is compatible with Scout and Recon GPS-guided trolling motors. You can configure, calibrate, and operate your trolling motor using the remote. The remote connects to the trolling motor via Bluetooth®.

➔ *Note: This remote controller is not compatible with Lowrance Ghost Series trolling motors.*

⚠ **WARNING:** Propeller hazard. Stop the trolling motor immediately whenever anyone in the water is near your boat.

⚠ **WARNING:** The trolling motor will continue a requested action even if the remote loses power. Make sure you know how to stop the trolling motor in an emergency by pressing the trolling motor power key or disconnecting its power supply.

⚠ **WARNING:** Only use the remote while aboard the boat. Using the remote to operate the trolling motor from another location may result in loss of the Bluetooth® connection and loss of control of the trolling motor.

⚠ **WARNING:** For safe and accurate operation, calibrate the trolling motor's bow offset and compass after trolling motor installation.

In the box

The remote is included with some trolling motor systems, or you may have purchased your remote separately as an accessory. A lanyard for the remote is available separately.

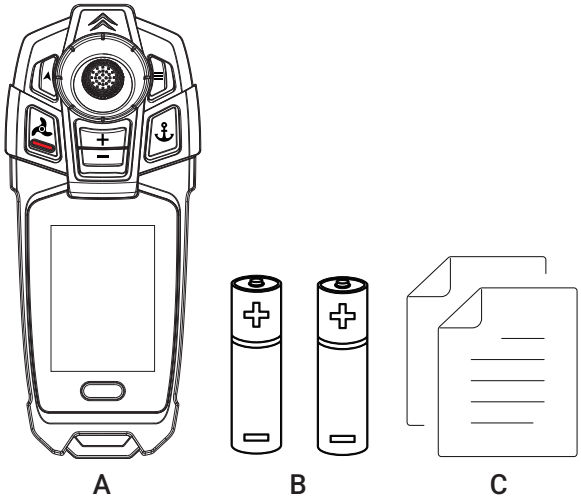

A FreeSteer Joystick Remote
B 2x AA batteries
C Documentation

Insert batteries

1 Flip up and turn the lock ring counter-clockwise (**A**) to remove the battery cover.

2 Check the polarity and install the supplied batteries. Replace, when required, with rechargeable NiMH or lithium AA batteries.

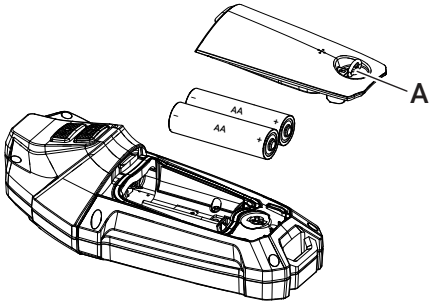

3 Replace the cover ensuring there is a good seal, and turn the lock ring clockwise.

4 Remove the batteries if the remote will be unused for an extended period of time.

Turn on remote

Press and hold the menu key ☰ on the top right of the remote (**A**) to turn it on.

➔ *Note: Press and release the same key to display the main menu.*

To turn off the remote, press and hold the menu key (**A**) again.

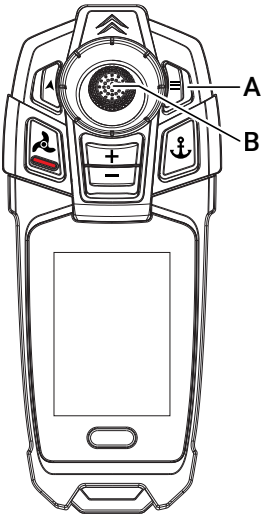

A Press and hold: power on/off
Press and release: menu

B Joystick

When the FreeSteer remote is ready for operation, its LCD screen displays:

- **Stowed** if the trolling motor is powered on and stowed, or
- **Manual** if the trolling motor is powered on and deployed (with the propeller not yet engaged).

Connect remote to trolling motor

The remote connects to the trolling motor via Bluetooth® automatically, if it has been paired before and if the trolling motor is switched on and within range.

The remote has an expected maximum operating range of 25 m (80 ft) from the trolling motor, under ideal conditions with a clear line of sight.

Navigate menus

1 Press and release the menu key ☰ on the remote (**A**, above) to display the main menu.

2 Move the joystick (**B**, above) forward or back to select options in the menu.

3 Center-press and release the joystick to open or enable a selected option.

Pairing

If the FreeSteer remote came in the same box as the trolling motor, it is pre-paired to the trolling motor. It is not necessary to pair it again.

If the remote is not paired, an onboarding sequence displays on-screen when you turn on the remote.

To pair the remote at a different time,

1 Press and release the menu key ☰ on the remote to open the menu.

2 Use the joystick to navigate to **Settings > Bluetooth > Pair device**.

3 Follow the instructions on-screen to put the trolling motor into Bluetooth® pairing mode and pair the remote to the trolling motor.

   ➔ *Note: Move the remote to within about 4 m (13 ft) of the trolling motor for pairing.*

Unpair devices connected to trolling motor

You can use the FreeSteer remote to see devices paired to, and connected to, the trolling motor.

1 Press and release the menu key ☰ on the remote to open the menu.

2 Use the joystick to navigate to **Settings > Bluetooth**. Select your trolling motor to open the list of devices the trolling motor is paired with.

Names in the devices list that have a checkmark beside them are connected to the trolling motor. Names without a checkmark are paired, but not connected.

3 Select the name of a device for the option to unpair that device.

   ➔ *Note: A FreeSteer remote can only be paired with one trolling motor at a time. This means when the remote is turned on it connects only to the most recently-paired trolling motor. However, one trolling motor can have more than one device, and more than one FreeSteer remote paired with it.*

   ➔ *Note: Carrying out a factory reset on the trolling motor unpairs **all** devices paired to that trolling motor.*

Settings for the remote

When the FreeSteer Joystick Remote is turned on the very first time, or following a factory reset of the remote, the onboarding sequence opens automatically.

To configure settings for the FreeSteer remote at a later time:

1 Press and hold the menu key ☰ on the remote to turn on the remote.

➔ ***Note:*** *The status **Disconnected** displays if the remote is not connected to the trolling motor. When disconnected, you are able to access the menu and settings for the remote, however, you cannot operate the trolling motor.*

2 Press and release the menu key ☰ to open the menu.

3 Use the joystick to navigate to **Settings > Remote**.

- **Display**. Set your preferences for the remote's LCD screen.

  Disabling the screen backlight, decreasing the brightness, and reducing the timeout interval will all extend the life of the remote's batteries.

- **Buttons**. Set your preferences for the remote's hard keys, including assigning functions to the configurable keys (refer to **Configurable keys** on page 22 for more information).
- **Language**. Select your preferred language.
- **Units**. Select units for distance and speed.
- **Time**. Set the clock displayed on the LCD screen.
- **About**. See the software version currently installed on the trolling motor system (including the remote).

Remote keys

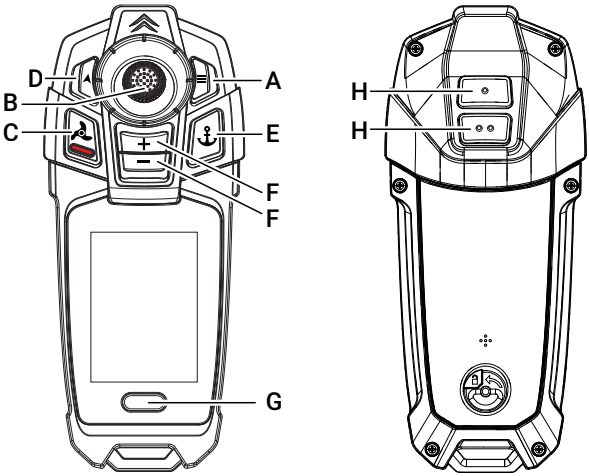

A **Power on/off** and **Menu**
- Press and hold to turn the remote on or off.
- Press and release to open the main menu.

B **Joystick**
- Use the joystick to change direction with FreeSteer (360° steering) or traditional (left-right) steering.
- **Menu navigation:** When the menu is open, move the joystick forward or back to select options in the menu. Center-press and release the joystick to open or enable a selected option.

C **Propeller on/off** and **Cancel all**
- Press and release to engage/disengage the propeller.
- Press and hold in any mode to stop all functions, disengage the propeller, and exit the mode.

D **Autopilot**
- Press and release to start/stop the configured Autopilot mode.

E **Anchor lock**
- Press and release to start/stop Anchor lock mode.

F **Speed control**
- Press and release, or press and hold, these keys to adjust the propeller thrust percentage.

G **In-mode soft key**
- Press and hold the soft key to enable the function indicated by the icon on-screen.

H **Configurable keys**
- Enter the settings menu to assign one or more functions to these keys.

LCD screen and status bar

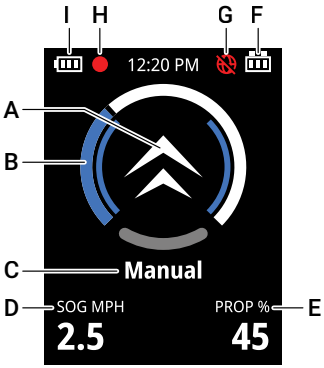

A Center icon displays the current mode (or lower unit direction in Manual mode).
B Blue dial fills clockwise to show propeller thrust percentage.
C Trolling motor mode/status.
D Current speed over ground.
E Current propeller percentage thrust.
F Trolling motor battery status.
G Alert: No GPS fix.
H Trail recording is active.
I FreeSteer remote battery status.

Soft key

The soft key (**A**) under the LCD screen provides quick access to in-mode functions.

The action of the soft key depends on the mode. A word or symbol displayed on the LCD screen above the soft key shows the current action of the soft key.

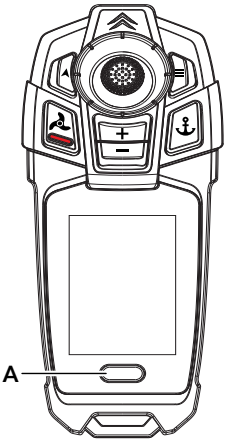

Icon	Function of soft key	Notes
	Press and hold to lock all keys except the menu key. Refer to **Lock remote** on page 11.	Icon visible when the trolling motor is in Manual mode.
	Yellow means the remote keys are locked. Press and hold the soft key to unlock the keys.	Icon visible when the trolling motor is in Manual mode and the remote is locked.
	Press and release to create a waypoint at the current position. Refer to **Create waypoint** on page 20.	Icon visible when the trolling motor is in Anchor lock mode.
	Press and release the soft key to start Cruise Control mode, which maintains a set speed over ground. Refer to **Cruise Control** on page 15.	Icon visible when the trolling motor is navigating or in an Autopilot mode.
	Green means Cruise Control mode is active. Press and release the soft key to stop Cruise Control and return to adjusting propeller thrust percentage.	Icon visible when Cruise Control mode is active.

Lock remote

When the trolling motor is in Manual mode, you can lock the keys on the remote to prevent accidental inputs. While the remote keys are locked:

- You cannot use the joystick to adjust direction.
- You can continue to operate the trolling motor as normal using the foot pedal or a connected display.
- The menu key ☰ still functions, and you can use the joystick as usual to navigate menus.

To lock the remote,

1 Press the menu key ☰ on the remote to open the menu.

2 Use the joystick to navigate to **Settings > Remote > Lock remote**.

Or

1 Press and hold the soft key when the open padlock is displayed.

> ⚠ **WARNING:** When the remote is locked, the keys on the remote cannot control the trolling motor.

Unlock remote

To unlock the remote, press and hold the soft key when the locked (yellow) padlock is displayed.

Continue to hold the soft key until the LCD screen displays **Remote unlocked**.

SET UP THE TROLLING MOTOR

Trolling motor calibration

For safe and accurate operation, calibrate the trolling motor's bow offset and compass after trolling motor installation.

> ⚠ **IMPORTANT!** Refer to your trolling motor's operation manual for important information about calibration.

Make sure the boat is stationary (e.g. secured to a dock), the trolling motor is deployed, and the lower unit can spin 360° without interruption. Make sure the trolling motor is not close to large metal objects or current-carrying devices whose magnetic fields could cause mis-calibration.

> ⚠ **WARNING:** Do not operate the propeller when the trolling motor is out of the water. The lower unit will move during calibration.

Calibrate trolling motor bow offset

1. Ensure the trolling motor and remote are powered on and connected with each other.
2. Press the menu key ☰ on the remote to open the menu.
3. Use the joystick to navigate to **Settings > Trolling motor > Calibration > Bow offset**.
4. Follow the steps displayed on the remote's screen.
   - ➔ *Note: You are required to move the lower unit during the calibration.*

After a successful calibration, there is a notification on the screen and the trolling motor automatically turns to its centerline position.

Calibrate trolling motor compass

1. Ensure the trolling motor and remote are powered on and connected with each other.
2. Press the menu key ☰ on the remote to open the menu.
3. Use the joystick to navigate to **Settings > Trolling motor > Calibration > Compass**.
4. Follow the steps displayed on the remote's screen.
   - ➔ *Note: During calibration, the deployed trolling motor (lower unit, column, and head unit) moves automatically to rotate 400° (approximately one and one eighth turns).*

After a successful calibration, there is a notification on the screen and the trolling motor automatically turns to its centerline position.

Trolling motor settings

1. Ensure the trolling motor and remote are powered on and connected with each other.
2. Press and release the menu key ☰ on the remote to open the menu.
3. Use the joystick to navigate to **Settings > Trolling motor**.

For more information about each setting and its options, refer to your trolling motor's operation manual.

DRIVE THE TROLLING MOTOR

The joystick offers both traditional keypad-style steering, and FreeSteer proportional 360° steering.

With FreeSteer, joystick motion is not confined to forward-back-left-right. To adjust direction, simply move and hold the joystick anywhere on the joystick's 360° horizon.

When the trolling motor is in Manual mode (including Manual mode with FreeSteer), as opposed to an autopilot mode or navigating, you control the trolling motor as required to change the direction and speed of the boat.

Engage/disengage propeller

1 Press and release the propeller key to engage the propeller.

2 Press and release the propeller key again to disengage the propeller.

FreeSteer steering

1 Move and hold the joystick in any direction to activate FreeSteer.

The trolling motor lower unit begins rotating to the requested direction, and stops rotating when it matches the direction of the joystick. The icon (**A**) on the LCD screen moves to show the current direction of the lower unit.

2 Release the joystick to end FreeSteer and automatically resume the mode you were in, with the direction updated.

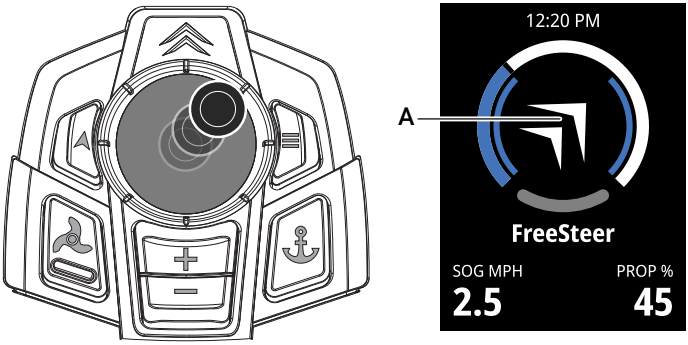

FreeSteer (360° steering)

Traditional steering

1 To turn the lower unit left, tap and release the joystick **horizontally left**.

2 To turn the lower unit right, tap and release the joystick **horizontally right**.

3 Move and hold the joystick horizontally left (or horizontally right) to turn the lower unit continuously.

Release the joystick to stop the lower unit.

The unit continues turning until it reaches the maximum steering angle.

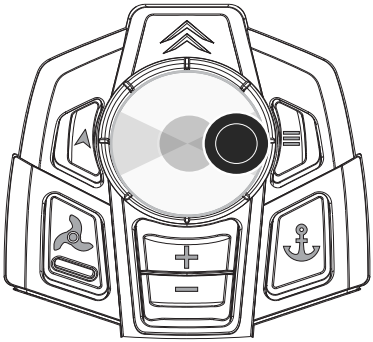

Traditional steering: tap and release

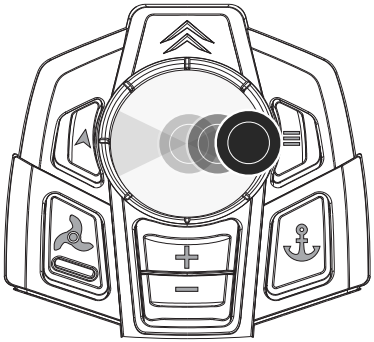

Traditional steering: move and hold left or right

Adjust speed

Whether you are using FreeSteer or traditional steering, use the speed keys **+**, **−** on the remote to increase or decrease the propeller thrust percentage.

With the propeller operating:

1 Press and release the increase speed key **+** to increase the propeller thrust in increments, or press and hold to quickly accelerate to maximum thrust.

2 Press and release the decrease speed key **−** to reduce the propeller thrust in increments, or press and hold to quickly reduce thrust to 0.

Cruise Control

Cruise Control mode maintains the vessel's speed over ground (SOG) at a constant value.

You can enable Cruise Control when you are in an Autopilot mode, or navigating.

In Cruise Control the +, − keys on the remote increase or decrease the Cruise Control speed by increments of 0.1 units. Your requested speed displays in the bottom right corner of the screen as **Set** (**C**).

➔ ***Note:*** *Change the unit for speed by navigating to* ***Settings > Remote > Units****.*

When you stop Cruise Control mode, the +, − keys return to controlling the propeller thrust percentage. The vessel's speed over ground may now be affected by wind and current.

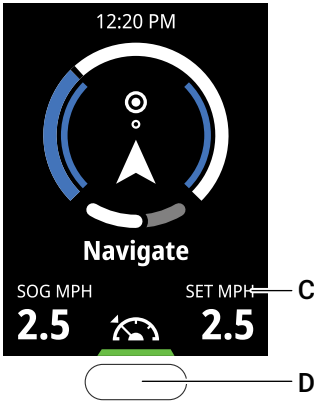

TROLLING MOTOR MODES

Refer to the operation manual that came with your trolling motor for information about trolling motor behavior in different modes.

The trolling motor requires its own GPS fix for Course lock mode, Anchor lock mode, Cruise Control mode, and navigation functions.

Manual mode and Heading lock mode can function when the trolling motor doesn't have a GPS fix.

➔ *Note: The trolling motor's GPS receiver is inside the trolling motor head. It is normal for the trolling motor to lose its GPS signal when indoors or stowed.*

Stop a mode

Press and hold the propeller key to stop any mode.

The propeller slows and stops, and the trolling motor returns to Manual mode.

Pause propeller within a mode

Press and release the propeller key to pause the propeller in any mode.

This is useful if you have hooked a fish, or identified a hazard where it is prudent to disengage the propeller.

When the propeller is paused in a mode,

- The indicator LED on the trolling motor head pulses slowly
- The lower unit continues tracking your desired course, heading, or position (as applicable) without the propeller operating
- If you input direction commands, your course or heading will update without the propeller operating

Press and release the propeller key again to reengage the propeller, and proceed in the mode using your most recent course or heading (as applicable). For Anchor lock mode, if the boat drifted, you return to the position you were holding before pausing.

Autopilot modes

To start the assigned Autopilot mode (**Course lock** or **Heading lock**), press and release the Autopilot key .

To stop Autopilot mode, press and release the Autopilot key again (or press and hold the propeller key to stop any mode).

Adjust direction in Autopilot mode

1 Move and hold the joystick in the direction you want. The lower unit direction is indicated by the icon on the remote's LCD display, and the light on the trolling motor head.
The trolling motor proceeds on the updated course (or heading) when you release the joystick.

Or

1 Tap the joystick horizontally left or right to adjust the course (or heading) in small steps.

Anchor lock mode

To start Anchor lock mode, press and release the anchor key ⚓.

To stop Anchor lock mode, press and release the anchor key ⚓ again (or press and hold the propeller key to stop any mode).

Anchor jog: adjust position in Anchor lock mode

When in Anchor lock mode, Anchor jog moves the boat in the direction you choose, then resumes Anchor lock at the new position.

FreeSteer Anchor jog

1 To move the boat continuously in any direction, move and hold the joystick in the direction you want.

The lower unit will turn to match the direction requested by the joystick, then the propeller speed will increase to move the boat in the requested direction.

→ *Note: In FreeSteer Anchor jog, the propeller thrust is proportional to the joystick's position from center. To use reduced thrust for precise positioning, partially engage the joystick. To get to your new spot as quickly as possible, move and hold the joystick at its fullest extent.*

2 Release the joystick to resume Anchor lock mode at the new position.

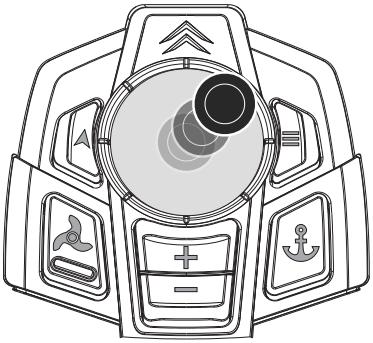

FreeSteer Anchor jog:
move and hold, any direction

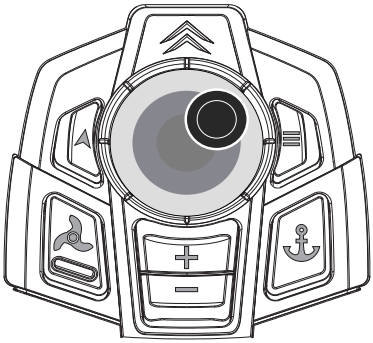

FreeSteer Anchor jog:
proportional thrust

Set-distance jogging

Tap and release the joystick in any 45° direction to jog the boat in that direction in increments of 1.5 m (5 ft) per tap.

When the boat has finished jogging, Anchor lock mode resumes at the new position.

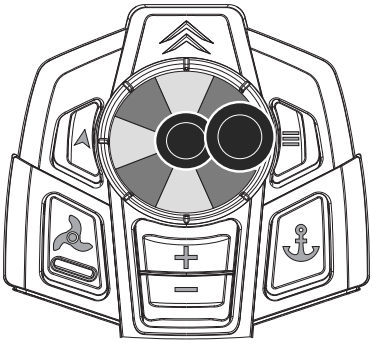

Jog 1.5 m (5 ft) increments: tap and release left, right, forward (up), back (down)

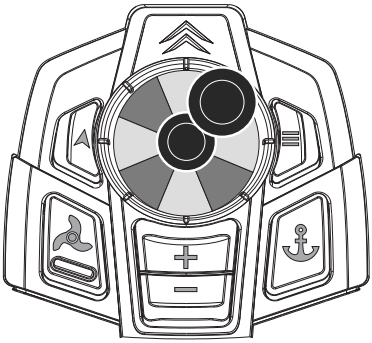

Jog 1.5 m (5 ft) increments diagonally: tap and release on a 45° angle

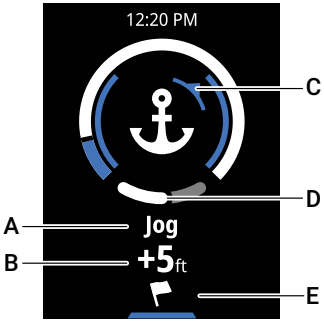

A Jog active
B Requested total jog distance
C Blue arc shows jog direction
D The arc fills in white to show how much of the jog distance has been covered
E Press and release soft key to create a waypoint

TROLLING MOTOR NAVIGATION FUNCTIONS

> ⚠ **WARNING:** Avoid serious injury from colliding with other boats, running aground, or striking objects in the water. The Autopilot system cannot detect other boats, shallow water, or objects in the water. Always be aware of possible obstructions to navigation when navigating or operating in Autopilot modes.

You can use the FreeSteer remote to record and access waypoints and routes.

Save waypoints to the trolling motor

Waypoints marked with the FreeSteer remote are saved to the trolling motor. The trolling motor can store up to twenty waypoints.

You can use the FreeSteer remote to inspect, manage, and navigate to waypoints saved on the trolling motor.

➔ *Note: The FreeSteer remote accesses the trolling motor's memory. You cannot use the remote to access waypoints stored on a display.*

Save waypoints to a display

When a waypoint is marked using the remote, it can be shared to a display on the NMEA 2000® network. This allows you to use your display to inspect, manage, and navigate to waypoints. Refer to **Configure a display to receive waypoints** below to make sure your display is set up correctly.

Configure a display to receive waypoints

To save trolling motor waypoints on your display:

- Enable **Receive waypoint** in the NMEA 2000® settings, and
- Enable **Allow duplicate waypoint names** in the advanced system settings.

  ➔ *Note: Waypoints will be created on the display even if the waypoint storage on the trolling motor is full.*

Create waypoint

1 Press and release the menu key ☰ on the remote to open the menu.

2 Use the joystick to navigate to **Waypoints > Add waypoint**.

3 Select **Save & close**.

Or

1 Press and release the key you configured for Waypoint to store a waypoint (refer to **Configurable keys** on page 22 for instructions).

Or

1 When the trolling motor is in Anchor lock mode, press and release the soft key under the waypoint icon 

Go to waypoint

The trolling motor can navigate to waypoints within 400 m (0.25 miles) of your vessel's current position.

1 Press and release the menu key ☰ on the remote to open the menu.

2 Use the joystick to navigate to **Waypoints**.

3 Saved waypoints are identified with numbers. Center-press and release the joystick to open a waypoint on the list. Its distance and its direction (as a bearing) are displayed.

➔ *Note: To see the waypoints displayed on a chart, you need a display configured to receive waypoints from the trolling motor.*

4 Select **Go to** to start navigating towards the selected waypoint using the trolling motor. The trolling motor will proceed in Navigation mode.

➔ *Note: The remote can only open and navigate to waypoints stored on the trolling motor. You cannot use the remote to access waypoints on a display.*

Delete waypoint

1 Press and release the menu key ☰ on the remote to open the menu.

2 Use the joystick to navigate to **Waypoints > Manage**.

3 Select **Delete all waypoints** to clear all waypoints from the trolling motor memory.

4 To delete individual waypoints, center-press and release the joystick to open a waypoint on the list. Its distance and its direction (as a bearing) are displayed.

5 Select **Delete** to delete the waypoint.

Record a trail

You can use the trolling motor to record, store, and repeat your favorite runs.

1 Press and release the menu key ☰ on the remote to open the menu.

2 Use the joystick to navigate to **Trails > Record trail**.

A red light in the top left corner of the remote's LCD screen shows recording is in progress.

3 To stop recording and save (or discard) the trail, press and release the menu key ☰ on the remote to open the menu.

4 Use the joystick to navigate to **Trails > Record trail > Stop recording**.

5 From here, select:
   - **Save & close** to save the recording;
   - **Delete** to delete the recording; or
   - **Cancel** to continue recording and leave the menu.

Follow recorded trail (route)

1 Use the remote to navigate to **Menu > Trails**.

→ *Note: Trails recorded by the trolling motor are called routes when they are saved. The data is exactly the same.*

2 Under the list of routes, select the route you want. Routes are identified with numbers.

3 Center-press and release the joystick to open a route from the list.

The date the route was recorded, the length of the route, and the direction to the **start point** of the route (as a bearing) display.

4 Select **Go to** to open the next menu, or select **Back** to return to the list of routes.
   - Select **Forward** to follow the route from its start point to its end point.
   - Select **Reverse** to follow the route in the opposite direction, from its end point to its start point.

5 Select **Proceed**. The trolling motor will proceed in Navigation mode.

Delete recorded trail (route)

1 Press and release the menu key ☰ on the remote to open the menu.

2 Use the joystick to navigate to **Trails > Manage**.

3 Select **Delete all routes** to clear all routes from the trolling motor memory.

4 To delete individual routes, center-press and release the joystick to open a route from the list.

   The date the route was recorded, the length of the route, and the direction to the **start point** of the route (as a bearing) are display.

5 Select **Delete** to delete the route.

Stop navigation

When the trolling motor is navigating towards a waypoint, or towards or along a route, **Stop navigation** is visible at the top of the main menu. **Stop navigation** cancels an instruction to navigate to a waypoint, or to navigate towards and/or along a prerecorded trail.

1 Press and release the menu key ☰ on the remote to open the menu.

2 Use the joystick to select **Stop navigation**.

   The propeller disengages, and the trolling motor enters Manual mode.

Or

1 Press and release the propeller key to pause the propeller while navigating.

2 Press and release the propeller key again to reengage the propeller and continue your navigation sequence.

3 Press and hold the propeller key to disengage the propeller and enter Manual mode.

CONFIGURABLE KEYS

Assign functions to keys on FreeSteer Joystick Remote

You can assign favorite functions to the keys labeled • and •• on the back of the FreeSteer remote.

Each key can be assigned up to two functions, accessed with a long press (press and hold), and short press (press and release) respectively.

➔ ***Note:*** *By default, these keys have no function until they are programmed.*

➔ ***Note:*** *You can instead use a mobile device with the Lowrance or Simrad® app, or a compatible display, to assign functions to the remote's configurable keys.*

1 On the remote, navigate to **Settings > Remote > Buttons**.

2 Select each of **Trigger 1 dot SHORT, Trigger 1 dot LONG, Trigger 2 dot SHORT, Trigger 2 dot LONG** and assign a function from the drop down list to each one.

Follow the steps above to check which functions you assigned to the configurable keys.

Below is a sample list of functions you can assign to the remote keys. The functions listed depend on your trolling motor, and the devices connected to your trolling motor.

Function assigned to key on remote (long press or short press)	Each press of the assigned key...
None	Does nothing.
Waypoint	Saves the boat's current position to your trolling motor as a Waypoint, which you can recall and return to another time.
Cruise Control	Starts/stops Cruise Control mode. This maintains the current speed over ground, adjusting propeller thrust for the effects of wind and current.
Power-Pole® up	If a Power-Pole® anchor is installed and connected to a compatible display, pressing this key raises the Power-Pole® all the way up.
Power-Pole® down	If a Power-Pole® anchor is installed and connected to a compatible display, pressing this key lowers the Power-Pole® all the way down.

The following functions are available if a Recon trolling motor is connected:

Function assigned to key on remote (long press or short press)	Each press of the assigned key...
360 Scan start/stop	If an Active Imaging 3-in-1 transducer and compatible display are connected, pressing this key makes the trolling motor rotate (without the propeller operating), enabling a 360° sonar picture of the underwater surroundings. Press the key again to stop the 360° scan.
ActiveTarget forward range +	Steps through the entries in the Forward Range menu to increase the forward range of your connected ActiveTarget transducer.
ActiveTarget forward range –	Steps through the entries in the Forward Range menu to decrease the forward range of your connected ActiveTarget transducer.
ActiveTarget down range +	Steps through the entries in the Down Range menu to increase the down range of your connected ActiveTarget transducer.
ActiveTarget down range –	Steps through the entries in the Down Range menu to decrease the down range of your connected ActiveTarget transducer.

Assign functions to keys on Advanced Wireless Foot Pedal

If you have an Advanced Wireless Foot Pedal, you can use the FreeSteer remote to assign your favorite modes or actions to certain keys on the foot pedal.

⚠ **WARNING:** The Advanced Wireless Foot Pedal has default functions programmed to the keys. Reconfiguring a key overwrites the default function for that key.

1 On the remote, navigate to **Settings > Foot pedal > Upper {Button 1, Button 2, Button 3}**.

2 Open each key you want to configure, and assign the key a function from the drop down list.

➔ *Note: Button 1, Button 2, and Button 3 refer to the keys labeled • , •• , ∴ located on the upper part of the foot pedal.*

3 On the remote, navigate to **Settings > Foot pedal > Lower {Button 1, Button 2, Button 3}**.

➔ *Note: Button 1, Button 2, and Button 3 refer to the keys labeled ◀, ✣, ▶ located on the lower key module.*

For more information, refer to the documentation accompanying the Advanced Wireless Foot Pedal.

SOFTWARE

For information about downloading and installing trolling motor software updates, refer to your trolling motor's operation manual. You cannot use the FreeSteer remote to update the trolling motor software.

➔ *Note: Do not disconnect power from the trolling motor while a software update is in progress. While the update is in progress the **MODE** and **STATUS** LEDs on the trolling motor mount flash white, left-right, and the direction indicator on the trolling motor head flashes blue.*

Update FreeSteer Joystick Remote software

Updates installed on the trolling motor pass from the trolling motor to the remote automatically when the remote is connected to the trolling motor and the trolling motor is in the stowed position.

View software versions and serial numbers

You can use the remote to look up the serial number and the installed software version for the trolling motor, and devices connected to it.

The device whose information you are looking up must be powered on and connected to the trolling motor.

1 Press and release the menu key ☰ to open the menu, then use the joystick to navigate to the relevant settings menu.
For example, navigate to **Settings > Trolling motor > About** to display the serial number and installed software version for the trolling motor.

Restore remote's default settings

To return the FreeSteer remote's settings to default values (and unpair it without performing a full factory reset on the trolling motor):

1 Press and release the menu key ☰ to open the menu.

2 Use the joystick to navigate to **Settings > Remote > Restore default**.

The remote unpairs from the trolling motor, and must be re-paired before it can connect to the trolling motor again. Functions programmed to the remote's configurable keys are cleared.

Unpair a foot pedal and restore its default settings

1 Press and release the menu key ☰ to open the menu.

2 Use the joystick to navigate to **Settings > Foot pedal > Restore default**.

Trolling motor factory reset

To carry out a factory reset of the trolling motor:

1 Press and release the menu key ☰ to open the menu.

2 Use the joystick to navigate to **Settings > Trolling motor > Factory reset**.

When you perform a factory reset on the trolling motor, all trolling motor settings revert to their factory defaults.

- Calibrations are cleared.
- Waypoints and recorded trails (called routes) saved on the trolling motor memory are cleared.
- All devices paired to the trolling motor via Bluetooth® are unpaired (including any factory-paired accessories that came with the trolling motor). These will require Bluetooth® pairing before they can reconnect.

DIMENSIONS

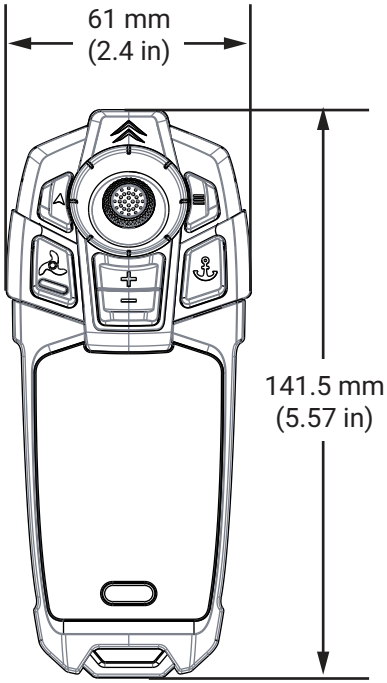

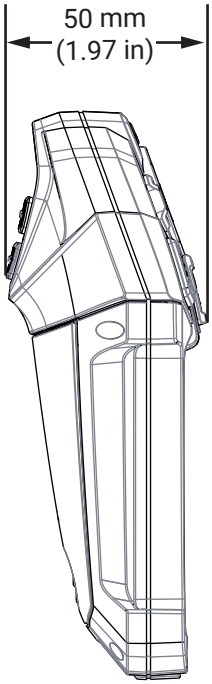

TECHNICAL SPECIFICATIONS

FreeSteer Joystick Remote	
Operating temperature range	–20°C to 60°C (–4°F to 140°F)
Storage temperature range	–40°C to 85°C (–40°F to 185°F)
Power	2x AA batteries
Weight (without batteries)	138.3 g (0.30 lb)
Humidity	66°C (150°F) 95% RH 18 hours
Waterproof rating	IPX7
Connectivity	Bluetooth® 5.2 Range: 25 m (80 ft) with no obstructions

©2026 Navico Group. All Rights Reserved. Navico Group is a division of Brunswick Corporation.

®Reg. U.S. Pat. & Tm. Off, and ™ common law marks.
Visit www.navico.com/intellectual-property to review the global trademark rights and accreditations for Navico Group and other entities.

lowrance.com

simrad-yachting.com