LOWRANCE

SIMRAD

Advanced Wireless Foot Pedal

Operation manual

English



Scan to save

lowrance.com

simrad-yachting.com

Copyright

©2026 Navico Group. All Rights Reserved. Navico Group is a division of Brunswick Corporation.

Trademarks

®Reg. U.S. Pat. & Tm. Off, and ™ common law marks. Visit **www.navico.com/intellectual-property** to review the global trademark rights and accreditations for Navico Group and other entities.

- Navico® is a trademark of Navico Group
- Lowrance® is a trademark of Navico Group
- Simrad® is a trademark of Kongsberg Maritime AS, Licensed to Navico Group
- Recon™ is a trademark of Navico Group
- Scout™ is a trademark of Navico Group
- FreeSteer™ is a trademark of Navico Group
- FlipSwitch™ is a trademark of Navico Group
- Bluetooth® is a trademark of Bluetooth SIG, Inc
- NMEA® and NMEA 2000® are trademarks of the National Marine Electronics Association
- QR code® is a trademark of Denso Wave Incorporated

Warranty

This product's warranty is supplied as a separate document.

Safety, disclaimer and compliance

This product's safety, disclaimer and compliance statements are supplied as a separate document.

More information

Document version: 001

Features described and illustrated in this guide may vary from your unit due to continuous development of the software.

For the latest version of this document in supported languages, and other related documentation, visit: **www.lowrance.com/downloads/scout**, **www.lowrance.com/downloads/recon**, or **www.simrad-yachting.com/downloads/recon**.

Contact us

For product support and service information, visit **www.lowrance.com/contact-us** or **www.simrad-yachting.com/contact-us**.

CONTENTS

4 Introduction
4 In the box
5 Insert batteries

6 Installation procedures
6 Tools needed
6 Remove lower key module (optional)
8 Connect power cable (optional)
9 Wire pedal to battery supply (optional)
9 Mount pedal to boat (optional)
10 Flip momentary switch (optional)

12 Operation
12 Turn on foot pedal
12 Connect foot pedal to trolling motor
12 Pairing
13 Status LED on foot pedal

14 Trolling motor calibration

15 Drive the trolling motor
15 Engage/disengage propeller
16 Proportional steering
16 Adjust speed
16 Lower key module steering functions
16 Propeller constant on
16 Traditional steering

16 Other trolling motor modes and functions
17 Autopilot modes (Course lock and Heading lock)
18 Create waypoint
18 Anchor lock mode

19 Assign functions to foot pedal keys

21 Software
21 View software version and serial number
22 Restore pedal's default settings
22 Trolling motor factory reset

23 Dimensions

24 Technical specifications

INTRODUCTION

The Advanced Wireless Foot Pedal is compatible with Scout and Recon GPS-guided trolling motors. You can calibrate and operate your trolling motor using the foot pedal. The pedal connects to the trolling motor via Bluetooth®.

⚠ **WARNING:** Propeller hazard. Stop the trolling motor immediately whenever anyone in the water is near your boat.

⚠ **WARNING:** The trolling motor will continue a requested action even if the pedal loses power. Make sure you know how to stop the trolling motor in an emergency by pressing the trolling motor power key or disconnecting its power supply.

⚠ **WARNING:** Only use the foot pedal while aboard the boat. Using the foot pedal to operate the trolling motor from another location may result in loss of the Bluetooth® connection and loss of control of the trolling motor.

⚠ **WARNING:** For safe and accurate operation, calibrate the trolling motor's bow offset and compass after trolling motor installation.

In the box

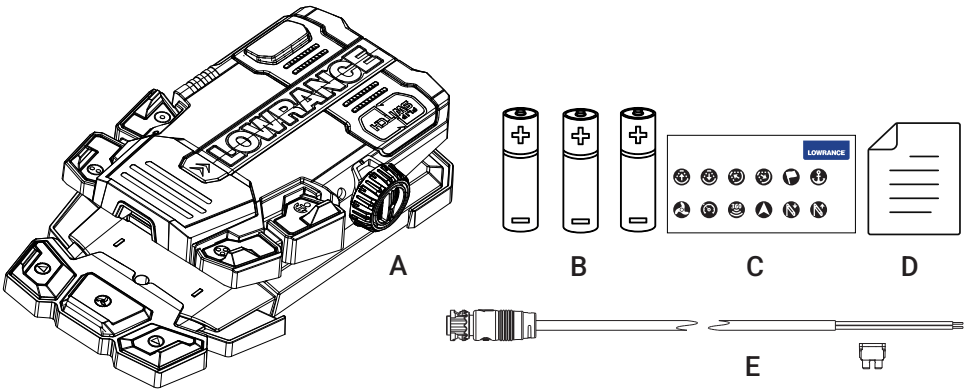

A Advanced Wireless Foot Pedal (with removable lower key module)
B 3x AA batteries
C Sheet of decals for programmable keys
D Documentation
E 12 V power cable (2 m (6.56 ft), 0.75 mm^2 (18 AWG)) and 3 A fuse

Insert batteries

1 Pull the center clip locking tab (**A**) and lift off the center clip (**B**).

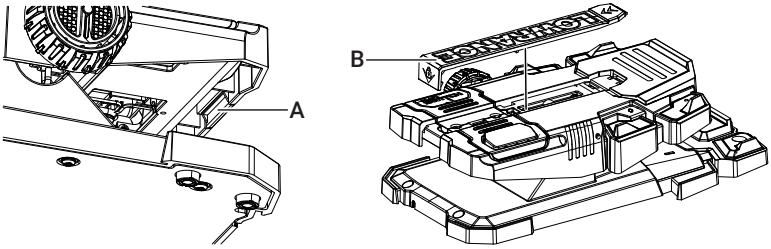

2 Press the FlipSwitch locking tab (**C**) to remove the FlipSwitch cover.

3 Remove the rubber battery compartment cover (**D**).

➔ *Note: The rubber cover has a tether in one corner that loops around a small retention post. We recommend you leave the rubber cover attached via the tether when inserting the batteries.*

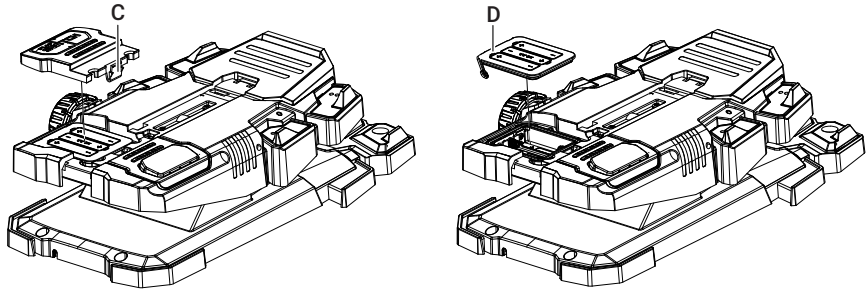

4 Check the polarity and install the three supplied AA batteries.

➔ *Note: Replace, when required, with rechargeable NiMH or lithium AA batteries.*

5 Replace the rubber battery compartment cover ensuring there is a good seal.

6 Click the FlipSwitch cover and center clip back into place.

➔ *Note: Remove the batteries if the foot pedal will be unused for an extended period of time.*

INSTALLATION PROCEDURES

The following installation procedures are optional.

➔ ***Note:*** *Carry out these procedures, if required, before you mount the pedal to your boat deck. Remove the three AA batteries, if present, from the foot pedal battery compartment before you carry out any of these procedures. For instructions on how to remove the batteries, refer to* ***Insert batteries*** *on page 5.*

Tools needed

- Philips screwdriver #2
- Power drill
- 8 mm (5/16") drill bit
- 17 mm (11/16") deep socket
- 11 mm (7/16") deep socket
- 11 mm (7/16") wrench
- 9.5 mm (3/8") ratchet

  ➔ ***Note:*** *Mounting hardware is not included for the foot pedal.*

Remove lower key module (optional)

The Advanced Wireless Foot Pedal comes with a pre-installed lower key module that gives you access to additional functions. If you don't intend to use these functions, you can remove the module before you mount the pedal to your boat deck.

1 Turn over the foot pedal.

2 Remove the eight Phillips screws that secure the base plate, and remove the base plate.

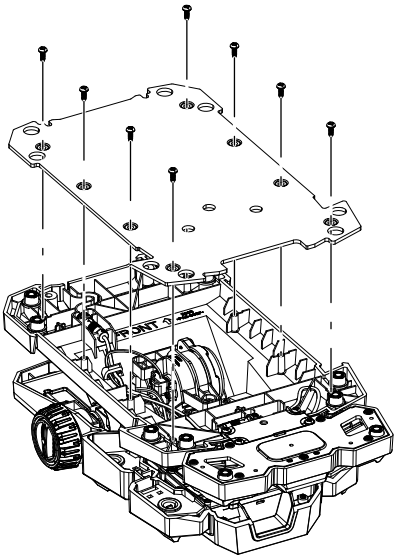

3 Remove the four screws that secure the joiner plate, and remove the joiner plate (**A**).

➔ *Note: The lower key module is now unsupported and attached only by the connector.*

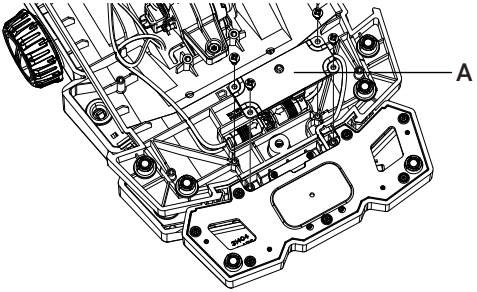

4 Disconnect the 4-pin connector (**B**) by unscrewing the lock on the right hand connector (**C**).

5 Remove the protective cap from its pedestal (**D**) and put it on the exposed 4-pin connector (**B**).

6 Press the capped pedal cable into the notch that holds it in the underside of the pedal (**E**).

7 Push down on the lower key module (**F**) to slide it free from the main body of the pedal.

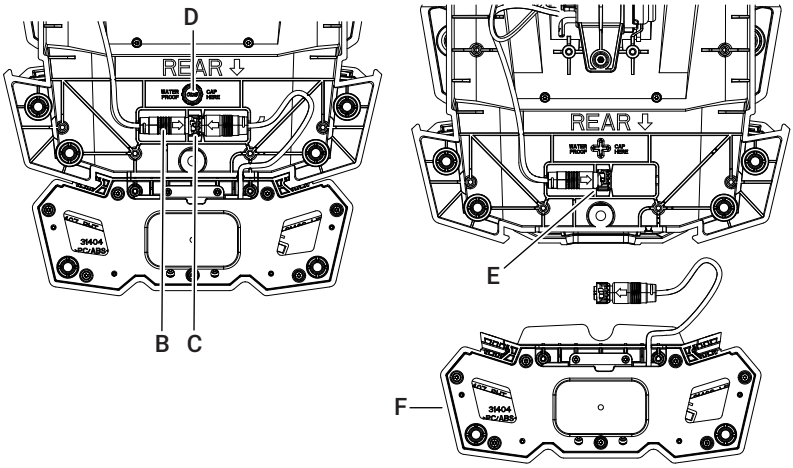

8 Replace the base plate and the eight screws that hold it. Torque the screws to 0.9 Nm (0.67 lb-ft).

➔ *Note: Do not use power tools when tightening to avoid stripping of the plastic screw bosses or fastener head.*

9 Store the lower key module, joiner plate, and joiner plate screws in a safe place for future use.

Connect power cable (optional)

To hardwire the power instead of using batteries, connect the supplied 12 V power cable to the foot pedal. This enables the pedal to turn on automatically when 12 V power is applied.

1 Turn over the foot pedal.

2 Remove the eight Phillips screws that secure the base plate, and remove the base plate.

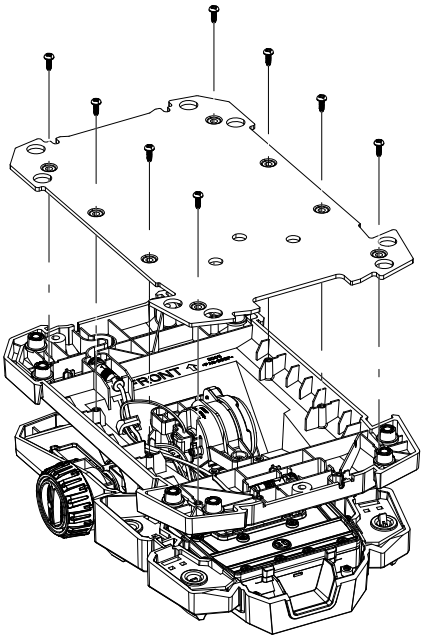

3 Release the power connector cable (**A**) from the inside of the foot pedal. Remove its waterproof cap and store the cap on the pedestal (**B**).

4 Connect the supplied **12 V**, 2-pin power cable to the connector in the foot pedal (**C**). Fit the cable into the strain relief channel in the pedal (**D**).

➔ *Note: After the connection is made, the connector sits lower down the foot pedal than where initially stowed.*

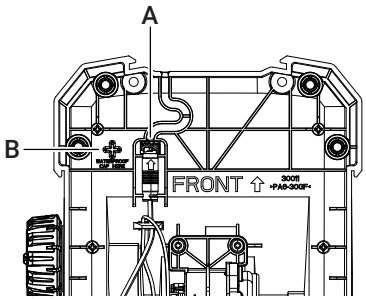

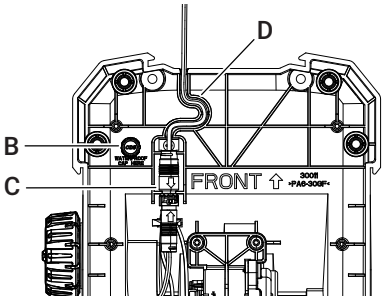

5 Replace the base plate and the eight screws that hold it. Torque the screws to 0.9 Nm (0.67 lb-ft).

➔ *Note: Do not use power tools when tightening to avoid stripping of the plastic screw bosses or fastener head.*

6 For instructions on how to wire the bare ends of the foot pedal power cable to a battery supply, refer to **Wire pedal to battery supply (optional)**, below.

Wire pedal to battery supply (optional)

If you chose to hardwire power to your foot pedal, you can wire the pedal's power cable to a 12 V power supply. Install the included 3 A inline fuse (**A**) on the foot pedal's positive (**+**) wire (**B**).

The 12 V power cable is 2 m (6.56 ft) in length. The wire size is 0.75 mm^2 (18 AWG).

If you need to extend the power cable up to 3 m (10 ft), use 0.75 mm^2 (18 AWG) wire or larger.

⚠ **WARNING:** Before wiring the pedal power cable to a 12 V power source, the breaker for the chosen power source must be in the OFF position.

⚠ **WARNING:** You cannot use the same battery system used to power the trolling motor. You need a dedicated 12 V power source. The cranking/electronics battery can be used if it is a 12 V battery.

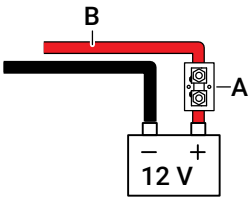

Mount pedal to boat (optional)

➔ *Note: Mounting hardware is not supplied. Obtain mounting hardware that suits your boat and installation. Use screws with a diameter of 3.17–4.76 mm (1/8"–3/16"). If available, we recommend #10 self tapping screws.*

7 For optimal Bluetooth® connectivity, find a location within close proximity that has a clear line of sight to the trolling motor.

➔ *Note: The wireless pedal has a maximum operational range of 25 m (80 ft) from the trolling motor. This is under ideal conditions with a clear line of sight.*

8 Use the three mounting holes on the foot pedal (**A**) to mount the pedal to the deck.

9 Only tighten enough to slightly compress the bumper pads underneath the foot pedal.

➔ *Note: For foot pedal dimensions, see page 23.*

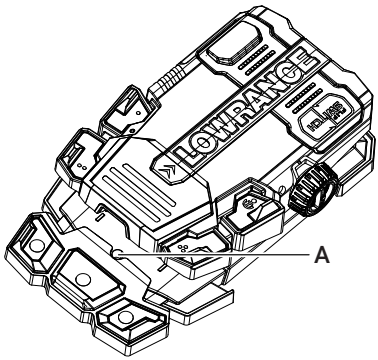

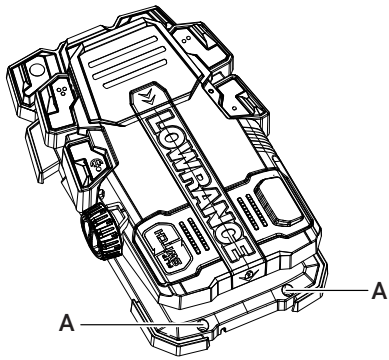

Flip momentary switch (optional)

The FlipSwitch allows you to position the momentary switch on the left or right side of the pedal.

1 Pull the center clip locking tab (**A**) and lift off the center clip (**B**).

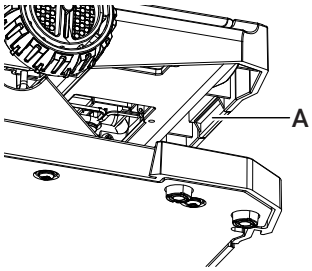

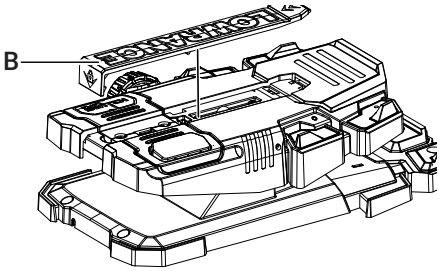

2 Remove the two Phillips screws that secure the FlipSwitch assembly.

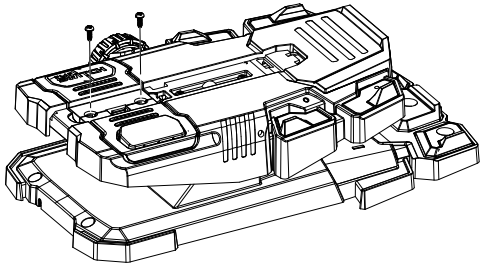

3 Lift the assembly and turn it 180°. Re-fasten the screws and torque to 0.9 Nm (0.67 lb-ft).

➔ *Note: As you do this, be careful not to damage the FlipSwitch cables with excessive force or by pinching.*

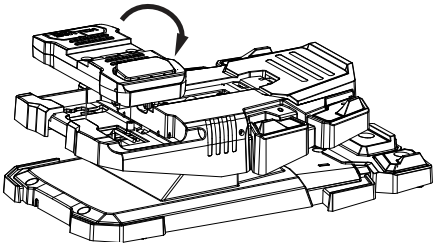

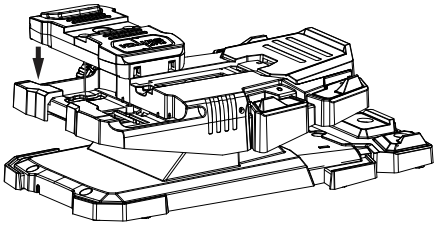

4 Clip the center clip back into place.

OPERATION

Turn on foot pedal

If your foot pedal is wired to a 12 V supply, it will turn on automatically as soon as the power supply is connected.

If you are using AA batteries to power the foot pedal, press and release the power key (**A**) under the heel end of the foot pedal to turn on the foot pedal.

To turn off the foot pedal, press and release the power key (**A**) again.

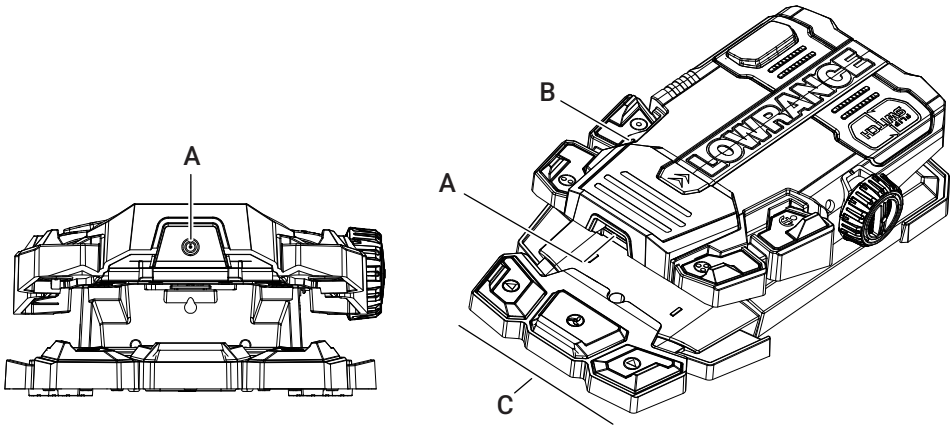

A Foot pedal power key
B Foot pedal status and battery indicator light
C Lower key module (can be removed)

Start up and ready for operation

The LED on the foot pedal (**B**, above) shows blue as the foot pedal powers up.

The LED then changes color to signal the battery level, then Bluetooth® connection status.

For more information about the foot pedal indicator LED, refer to **Status LED on foot pedal** on page 13.

Connect foot pedal to trolling motor

The foot pedal connects to the trolling motor via Bluetooth® automatically, if it has been paired before and if the trolling motor is switched on and within range.

The foot pedal has an expected maximum operating range of 25 m (80 ft) from the trolling motor, under ideal conditions with a clear line of sight.

Pairing

→ *Note: If the Advanced Wireless Foot Pedal came in the same box as the trolling motor, it is pre-paired to the trolling motor. It is not necessary to pair it again.*

If you need to pair the foot pedal to your trolling motor, follow these steps:

1 Make sure the foot pedal is within about 4 m (13 ft) of the trolling motor for pairing.

2 Put the trolling motor into Bluetooth® pairing mode by pressing and holding the power key at the rear of the trolling motor mount.

3 Put the foot pedal into Bluetooth® pairing mode by pressing and holding the power key at the rear of the foot pedal.

The status LED on the foot pedal flashes blue rapidly to show the pedal is in pairing mode. It displays solid blue briefly to show successful pairing. Thereafter a slow blue flash shows the foot pedal is connected to the trolling motor.

➔ *Note: An Advanced Wireless Foot Pedal can only be paired with one trolling motor at a time. This means that the pedal only connects to the most recently-paired trolling motor.*

Unpair and restore defaults

To unpair the foot pedal and restore its default settings, refer to **Restore pedal's default settings** on page 22.

Status LED on foot pedal

There is a status LED on the left top surface of the foot pedal.

	Foot pedal LED	Meaning
Sequence when foot pedal turns on	Blue, two quick flashes	Foot pedal is powering up
	Green or orange or red	Foot pedal power supply: Green: Foot pedal power supply is good (greater than 40%) Orange: Less than 40% Red: Less than 20%
	Slow red flash	Bluetooth® connection: searching
	Solid blue, then off	Bluetooth® connection: connected
Operation	Slow blue flash	Foot pedal has a Bluetooth® connection to the trolling motor
	Rapid blue flash	Foot pedal is in Bluetooth® pairing mode
	Slow white flash	A software update is in progress
	Slow red flash	Fault

TROLLING MOTOR CALIBRATION

For safe and accurate operation, calibrate the trolling motor's bow offset and compass after trolling motor installation.

> ⚠ **IMPORTANT!** Refer to your trolling motor's operation manual for important information about calibration.

Make sure the boat is stationary (e.g. secured to a dock), the trolling motor is deployed, and the lower unit can spin 360° without interruption. Make sure the trolling motor is not close to large metal objects or current-carrying devices whose magnetic fields could cause mis-calibration.

> ⚠ **WARNING:** Do not operate the propeller when the trolling motor is out of the water. The lower unit will move during calibration.

Calibrate bow offset

1. Ensure the trolling motor and foot pedal are powered on and connected with each other.
2. Hold •• and ∴ together on the foot pedal until the LEDs on the trolling motor mount flash blue.
3. Move the lower unit until it is parallel to the centerline of the boat (facing forward), and press and release ⚓ on the foot pedal to set the bow offset.

Calibrate compass

1. Ensure the trolling motor and foot pedal are powered on and connected with each other.
2. Hold •• and ∴ together on the foot pedal until the LEDs on the trolling motor mount flash blue.
3. Press and release ∴ to start compass calibration. The trolling motor rotates automatically for several seconds, and emits a long tone when the calibration is complete.

After a successful calibration, the trolling motor automatically returns to its centerline position and enters Manual mode.

DRIVE THE TROLLING MOTOR

⚠ **WARNING:** Propeller hazard: stop the trolling motor immediately whenever anyone in the water is near your boat. The trolling motor will continue a requested action even if the remote loses power. Make sure you know how to stop the trolling motor in an emergency by pressing the trolling motor power key or disconnecting its power supply.

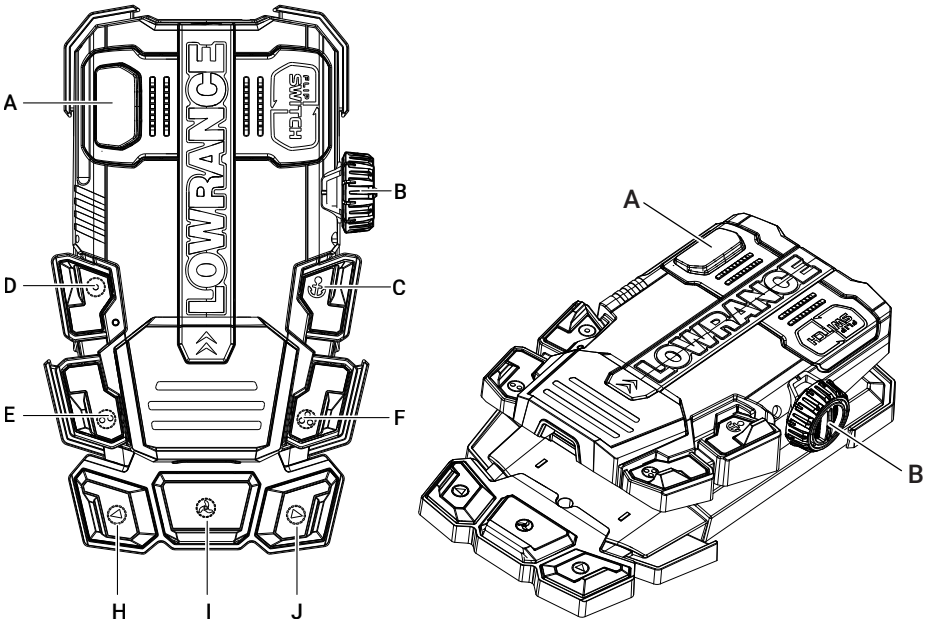

Engage/disengage propeller

To engage the propeller, press and hold the momentary switch (**A**).

The propeller is engaged as long as the momentary switch is pressed (provided the speed knob, (**B**) is not in the **OFF** position).

The propeller disengages when the momentary switch (**A**) is released.

➔ *Note: The FlipSwitch allows you to install the momentary switch on either the left or right side of the pedal depending on your preference. Refer to* ***Flip momentary switch (optional)*** *on page 10 for instructions.*

Proportional steering

Turn the boat to port (left) by pushing the heel end of the foot pedal down.

Turn the boat to starboard (right) by pushing the toe end of the foot pedal down.

To make the boat go straight ahead, keep the foot pedal in a level position.

➔ *Note: To update course/heading in an Autopilot mode, hold the momentary switch (**A**) while moving the pedal. Release the momentary switch to set the new direction.*

Adjust speed

Roll the speed adjustment knob (**B**) forward (away from you) to increase the propeller thrust percentage.

Lower key module steering functions

The keys on the lower key module (**H, I, J**) have steering functions programmed by default. These keys can be reprogrammed, changing their functions.

➔ *Note: If the lower key module is not needed, you can uninstall it. Refer to **Remove lower key module (optional)** on page 6 for instructions. The lower key module does not operate when it is removed from the foot pedal.*

Propeller constant on

Press and release (**I**) to engage propeller constant on.

Press and release again to stop the propeller.

Traditional steering

Press and release, or press and hold, ◄ ► (**H**, **J**) to turn the trolling motor left or right.

The lower unit rotates until the direction key is released, or maximum steering angle has been reached. The light bar on the trolling motor head unit shows the direction the lower unit is pointing.

OTHER TROLLING MOTOR MODES AND FUNCTIONS

Refer to the operation manual that came with your trolling motor for information about trolling motor behavior in different modes.

Refer to **Assign functions to foot pedal keys** on page 19 for instructions on how to assign modes and actions to the configurable keys on the foot pedal.

The trolling motor requires its own GPS fix for Course lock mode, Anchor lock mode, Cruise Control mode, and navigation functions.

Manual mode and Heading lock mode can function when the trolling motor doesn't have a GPS fix.

➔ *Note: The trolling motor's GPS receiver is inside the trolling motor head. It is normal for the trolling motor to lose its GPS signal when indoors or stowed.*

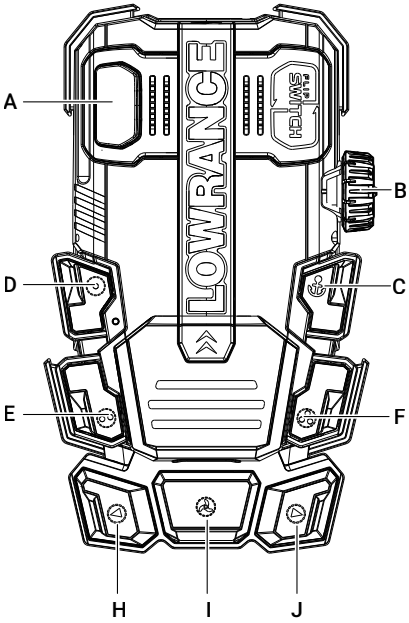

Autopilot modes (Course lock and Heading lock)

Adjust direction

When the trolling motor is in an Autopilot mode, you can adjust the boat's course (or heading, as applicable) without leaving the mode.

To do this, operate the foot pedal while holding the momentary switch, or use the direction keys on the lower key module to adjust the course (or heading).

The trolling motor proceeds on the updated course (or heading) as soon as you release the momentary switch or direction key on the foot pedal.

➔ *Note: You can assign any of Course lock, Heading lock, and Cruise Control to the foot pedal's configurable keys to start/stop these modes. Refer to* ***Assign functions to foot pedal keys*** *on page 19*.

Pause propeller

You can pause the propeller if you have hooked a fish or identified a hazard.

1 Press and release the propeller key (**I**), or other key to which you have assigned the Propeller constant on function.

2 Press and release the key again to reengage the propeller and resume the course or heading you were using.

➔ *Note: If you have removed the lower key module from the foot pedal (and not assigned a Propeller constant on key to the foot pedal) you cannot use the foot pedal to pause an Autopilot mode.*

Create waypoint

You can mark points of interest (waypoints) using the Advanced Wireless Foot Pedal. To do this, assign **Waypoint** to one of the configurable keys on the foot pedal. Refer to **Assign functions to foot pedal keys** on page 19**.**

Save waypoints to a display

When a waypoint is marked using the Advanced Wireless Foot Pedal, it can be shared to a display on the NMEA 2000® network. This allows you to use your display to inspect, manage, and navigate to waypoints. Refer to **Configure a display to receive waypoints** on page 18 to make sure your display is set up correctly.

Save waypoints to the trolling motor

Waypoints marked with the FreeSteer remote or Advanced Wireless Foot Pedal are saved to the trolling motor (as well as your display, if your display is configured to receive waypoints). The trolling motor can store up to twenty waypoints.

➔ *Note: You can use the FreeSteer remote to inspect, manage, and navigate to waypoints saved on the trolling motor.*

Configure a display to receive waypoints

To save trolling motor waypoints on your display:

- Enable **Receive waypoint** in the NMEA 2000® settings, and
- Enable **Allow duplicate waypoint names** in the advanced system settings.

Anchor lock mode

Press and release the Anchor key (**C**) to start/stop Anchor lock mode.

While in Anchor lock mode, you can also end Anchor lock mode by:

- pressing and releasing the momentary switch (**A**) or
- moving the foot pedal more than 3 degrees in either direction

Pause propeller

You can pause the propeller if you have hooked a fish or identified a hazard.

1 Press and release the propeller key (**I**), or other key to which you have assigned the Propeller constant on function.

2 Press and release the key again to reengage the propeller and resume Anchor lock.

➔ *Note: If you have removed the lower key module from the foot pedal (and not assigned a Propeller constant on key to the foot pedal) you cannot use the foot pedal to pause Anchor lock.*

Anchor jog

While in Anchor lock mode, press and release ◀ or ▶ to move the boat 1.5 m (5 ft) left or right.

➔ *Note: Different functions may be assigned to ◀ ▶ (**H**, **J**).*

ASSIGN FUNCTIONS TO FOOT PEDAL KEYS

You can assign your favorite trolling motor modes or actions to the keys labeled • , •• , ∴ , ◀ , ⚙ , ▶ on the Advanced Wireless Foot Pedal.

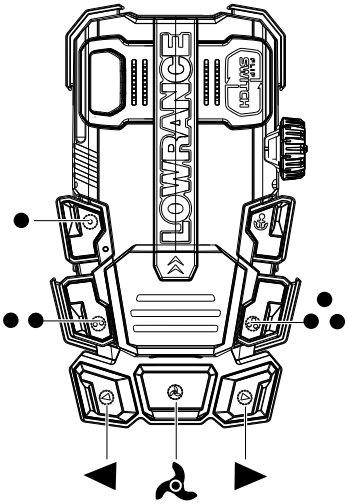

➔ ***Note:*** *Configuring a key overwrites the default function for that key. After you have programmed the keys on the foot pedal, apply adhesive labels from the decal sheet enclosed with the foot pedal to the keys to remind you which function you have assigned to each key.*

You can use any of the following connected devices to program the keys on the Advanced Wireless Foot Pedal:

- FreeSteer Joystick Remote
- Mobile device with the Lowrance or Simrad® app
- Compatible display.

Mobile app

1. In the app, navigate to **My devices > Trolling motor > Settings > Foot pedal**.
2. Open each key you want to configure, and assign the key a function from the drop down list (refer to page 20).

To use your FreeSteer remote or display, refer to the documentation that came with it.

Refer to the following tables for functions you can assign to keys on the Advanced Wireless Foot Pedal. The functions available depend on your trolling motor and on what is connected.

Function assigned to foot pedal key	Each press of the assigned key...
None	Does nothing.
Waypoint	Saves the boat's current position to your trolling motor as a Waypoint, which you can recall and return to another time.
Prop constant on	Engages (and alternately, disengages) the propeller. With this key the propeller operates continuously, without the need to hold a momentary switch. This key pauses (and alternately, resumes) the propeller in any driving mode.
Course lock	Starts Course lock mode, with the trolling motor current speed and the lower unit's current direction used as the initial speed and course. Press again to stop Course lock mode.
Heading lock	Starts Heading lock mode, with the trolling motor current speed and the lower unit's current direction used as the initial speed and heading. Press again to stop Heading lock mode.
Cruise Control	Enters Cruise Control mode. This maintains the current speed over ground, adjusting propeller thrust for the effects of wind and current. Press again to stop Cruise Control mode.
Power-Pole® up	If a Power-Pole® anchor is installed and connected to a compatible display, pressing this key raises the Power-Pole® all the way up.
Power-Pole® down	If a Power-Pole® anchor is installed and connected to a compatible display, pressing this key lowers the Power-Pole® all the way down.
Steer left	This option is only available for the ◀ key on the lower key module, and allows you to restore the original function to the key if it has been reprogrammed. You cannot assign Steer left to any other keys on the foot pedal.
Steer right	This option is only available for the ▶ key on the lower key module, and allows you to restore the original function to the key if it has been reprogrammed. You cannot assign Steer right to any other keys on the foot pedal.

The following functions are available if a Recon trolling motor is connected:

Function assigned to key on remote (long press or short press)	Each press of the assigned key...
360 Scan start/stop	If an Active Imaging 3-in-1 transducer and compatible display are connected, pressing this key makes the trolling motor rotate (without the propeller operating), enabling a 360° sonar picture of the underwater surroundings. Press the key again to stop the 360° scan.
ActiveTarget forward range +	Steps through the entries in the Forward Range menu to increase the forward range of your connected ActiveTarget transducer.
ActiveTarget forward range –	Steps through the entries in the Forward Range menu to decrease the forward range of your connected ActiveTarget transducer.
ActiveTarget down range +	Steps through the entries in the Down Range menu to increase the down range of your connected ActiveTarget transducer.
ActiveTarget down range –	Steps through the entries in the Down Range menu to decrease the down range of your connected ActiveTarget transducer.

SOFTWARE

For information about downloading and installing trolling motor software updates, refer to your trolling motor's operation manual.

➔ *Note: Do not disconnect power from the trolling motor while a software update is in progress. While the update is in progress the **MODE** and **STATUS** LEDs on the trolling motor mount flash white, left-right, and the direction indicator on the trolling motor head flashes blue.*

Updates installed on the trolling motor pass from the trolling motor to the Advanced Wireless Foot Pedal automatically when the pedal is connected to the trolling motor and the trolling motor is in the stowed position.

View software version and serial number

You can use the Lowrance or Simrad® app on your mobile device, or the FreeSteer Joystick Remote, to look up the serial number of the trolling motor and the installed software version for the trolling motor.

You can also look up the serial number and software version for devices connected to the trolling motor.

Restore pedal's default settings

Use the Lowrance or Simrad® app on your mobile device, or the FreeSteer Joystick Remote, to return the foot pedal's settings to default values.

The pedal unpairs from the trolling motor, and must be re-paired before it can connect to the trolling motor again. Functions programmed to the pedal's configurable keys are cleared.

On the FreeSteer remote,

1 Press and release the menu key ☰ to open the menu.

2 Use the joystick to navigate to **Settings > Foot pedal > Restore default**.

Trolling motor factory reset

Refer to the operation manual for your trolling motor for instructions on how to carry out a factory reset on the trolling motor. You can not use the Advanced Wireless Foot Pedal to reset the trolling motor.

DIMENSIONS

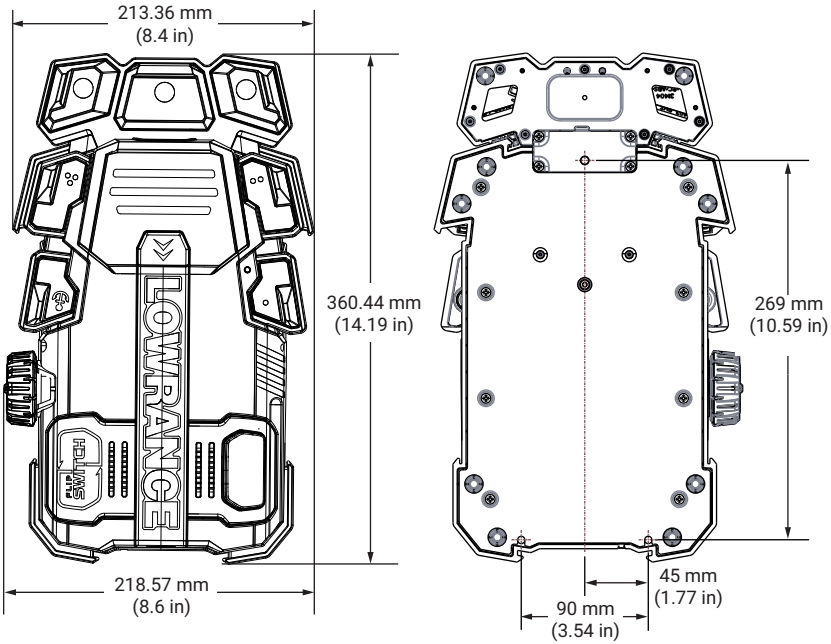
213.36 mm
(8.4 in)
360.44 mm
(14.19 in)
218.57 mm
(8.6 in)
269 mm
(10.59 in)
45 mm
(1.77 in)
90 mm
(3.54 in)

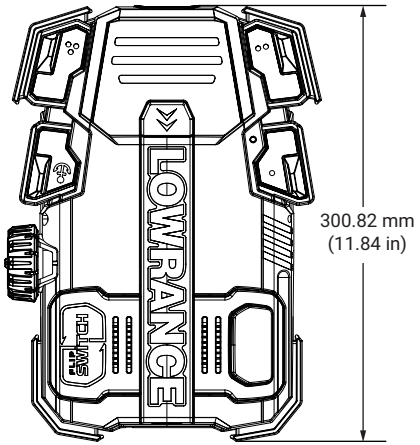
300.82 mm
(11.84 in)

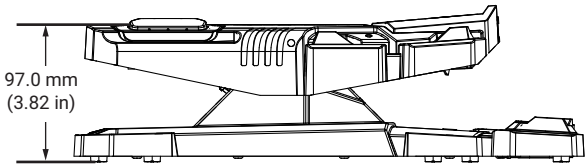
97.0 mm
(3.82 in)

TECHNICAL SPECIFICATIONS

Advanced wireless foot pedal	
Operating temperature range	–20°C to 60°C (–4°F to 140°F)
Storage temperature range	–40°C to 85°C (–40°F to 185°F)
Power	3x AA batteries 12 V power cable. Functional range: 9 V to 18 V
Fuse size	3 A (12 V)
Weight (without batteries)	Without lower key module: 1.72 kg (3.8 lbs)
Waterproof rating	IPX7
Connectivity	Bluetooth® 5.2 Range: 25 m (80 ft) with no obstructions

©2026 Navico Group. All Rights Reserved. Navico Group is a division of Brunswick Corporation.

®Reg. U.S. Pat. & Tm. Off, and ™ common law marks.
Visit www.navico.com/intellectual-property to review the global trademark rights and accreditations for Navico Group and other entities.

lowrance.com

simrad-yachting.com