LECTRON

NEXUS EV CHARGING STATION

USER MANUAL & INSTALLATION GUIDE

Compatible with all J1772 electric vehicles

Model:
LECHGNexusNEMA14-50J1772
LECHGNexusHWJ1772

CONTENTS

IMPORTANT SAFETY INSTRUCTIONS 3
GROUNDING INSTRUCTIONS 4
SAVE THESE INSTRUCTIONS 5
SPECIFICATIONS 8
WHAT'S IN THE BOX 10
TOOLS REQUIRED 11
PRE-INSTALLATION PLANNING 12
INSTALLATION & SETUP 15
CHARGING YOUR VEHICLE 20
LED INDICATORS & TROUBLESHOOTING 24
SUPPORT & WARRANTY 26

IMPORTANT SAFETY INSTRUCTIONS

WARNING — When using electric products, basic precautions should always be followed, including the following. This manual contains important instructions for **Models LECHGNexusNEMA14-50J1772** & **LECHGNexusHWJ1772** that shall be followed during installation, operation and maintenance of the unit.

a. Read all instructions before using this product.

b. This device should be supervised when used around children.

c. Do not put fingers into the electric vehicle connector.

d. Do not use this product if the flexible power cord or EV cable is frayed, has broken insulation, or any other signs of damage.

e. Do not use this product if the enclosure or the EV connector is broken, cracked, open, or shows any other indication of damage.

GROUNDING INSTRUCTIONS

Model: LECHGNexusNEMA14-50J1772 (NEMA14-50)

This product must be grounded. Should it malfunction or break down, grounding provides a path of least resistance for electric current to reduce the risk of electric shock. This product is equipped with a cord having an equipment grounding conductor and a grounding plug. The plug must be plugged into an appropriate outlet that is properly installed and grounded in accordance with all local codes and ordinances.

WARNING: Improper connection of the equipment grounding conductor can result in a risk of electric shock. If you are not sure whether the product is properly grounded, consult a qualified electrician. Do not modify the plug provided with the product.

Model: LECHGNexusHWJ1772 (HARDWIRED)

This product must be connected to a grounded, metal, permanent wiring system, or an equipment-grounding conductor must be run with the circuit conductors and connected to the equipment grounding terminal or lead on the product.

SAVE THESE INSTRUCTIONS

⚠️ INSTRUCTIONS PERTAINING TO A RISK OF FIRE OR ELECTRIC SHOCK!

- It is recommended that electrical outlets for your charger be installed by a licensed and qualified electrician. To avoid serious injury or death, installation must comply with the provisions of the National Electric Code (NEC) and all local codes. In cases of any conflict between the local codes and the NEC, local codes shall take precedence.
- This product must be grounded. Should it malfunction or break down, grounding provides a path of least resistance for electric current to help reduce the risk of electric shock. This product includes a cord that is equipped with a grounding conductor and a grounding plug. The plug must be inserted into an appropriate outlet that is properly installed and grounded in accordance with all local codes and ordinances.
- DO NOT DROP the charger or coupler.
- If the output plug separates from the charger module or the charge coupler, DO NOT ATTEMPT TO REPAIR THE CABLE YOURSELF. Contact us for assistance.
- When using the charger, basic precautions should always be followed, including the following:
  - Read warnings on the charger cord label before operating the charger for the first time.
  - Read all instructions in this guide before using the charger.
  - Do not put fingers into the electric vehicle connector.

- Do not use this product if the flexible power cord or EV cable is frayed, has broken insulation, or any signs of damage.
- Never use the charger with an extension cord.
- Shock hazard - make sure the plug is fully inserted into the wall outlet so that there are no exposed blade surfaces.
- Children should be supervised when in the vicinity of the charger while plugged in.
- Handle the equipment with care during transportation. Do not subject it to strong force or impact or pull, twist, tangle, drag or step on the equipment, to prevent damage to it or any components.
- Keep the product in a clean, low humidity environment, avoid moisture or water.

CAUTION

To reduce the risk of fire, connect only to a circuit provided branch circuit over-current protection in accordance with the CSA C22.1-15 Canadian Electrical Code, Part 1 (Canada) or ANSI / NFPA 70 National Electrical Code (USA).

⚠WARNING

The input/output voltage of this product is hazardous and may endanger human safety. When installing, repairing, and maintaining the product, please strictly follow all warnings and operating instructions in the user manual, as well as all applicable local, regional, and national laws and regulations. Failure to do so may result in death, injury, or property damage, and void the limited warranty.

Transportation & Storage

- Handle the equipment with care during transportation. Do not subject it to strong force or impact; do not pull, twist, tangle, drag, or step on the equipment.
- Keep the product in a clean, low-humidity environment. Avoid moisture or water.
- Store indoors, in original packaging if possible, at temperatures between −22°F and 122°F (−30°C to 50°C).

NOTE: Permits may be required by your local authority having jurisdiction (AHJ) before beginning electrical work. Check with your electrician or local building department before hardwired installation.

SPECIFICATIONS

Lectron Nexus is an automotive-grade EV charging station designed for reliability and ease of use. This user manual covers two models:

- LECHGNexusNEMA14-50J1772 - Plug-and-play model with a NEMA 14-50 plug
- LECHGNexusHWJ1772 - Hardwired model with direct-wired installation

	LECHGNexusNEMA14-50J1772	**LECHGNexusHWJ1772**
Power Connection	NEMA 14-50	Hardwired
Maximum Output	40A	48A
Certification	UL2594, UL2231, UL2251, UL817	UL2594, UL2231, UL2251
Input Voltage	208–240 V AC	
Frequency	50/60 Hz	
Connector	J1772	
Cable Length	23 ft	
Enclosure Rating	IP66 / NEMA 4	
Operating Temperature	−22°F to 122°F	
Housing Material	High-Strength Polycarbonate	
Built-In Protection	CCID (Charging Circuit Interrupting Device)	

Circuit Breaker & Output Reference

The Nexus is a continuous load device. Per NEC guidelines, the dedicated circuit must be rated for at least 125% of the charger's maximum output. Use the table below to select the right breaker and wire gauge for your installation.

Dedicated Breaker	Max Charger Output	Power at 240V	Est. Range Added / Hour
60 A (Hardwired only)	48 A	11.5 kW	~36 miles / hr
50 A	40A	9.6 kW	~30 miles / hr
40 A	32 A	7.7 kW	~24 miles / hr
30 A	24 A	5.7 kW	~18 miles / hr
20 A	16 A	3.8 kW	~12 miles / hr

NOTE: Wire gauge: For 40–48 A circuits, use minimum 6 AWG, 90°C copper conductors (THWN-2 rated).

For lower amperage circuits, consult your electrician and local electrical code for correct wire sizing.

Built-In Ground Fault Protection

The Nexus includes a built-in CCID (Charging Circuit Interrupting Device) that continuously monitors for ground faults. Because of this integrated protection, we do not recommend using a GFCI-type circuit breaker in the panel — doing so can cause nuisance tripping. Use a standard non-GFCI, two-pole breaker.

NOTE: If local code specifically requires a GFCI breaker for a plug-in (NEMA 14-50) installation, we recommend switching to the hardwired model (LECHGNexusHWJ1772), which is not subject to the same GFCI outlet requirement in most jurisdictions. Consult your electrician.

WHAT'S IN THE BOX

Check your package for the following items. If anything is missing or appears damaged, contact us before proceeding.

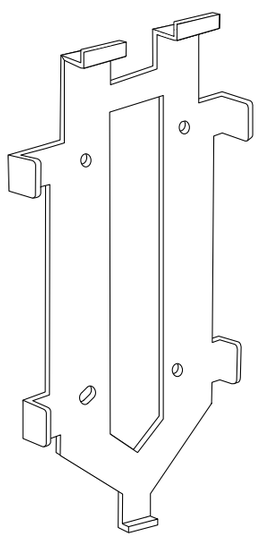

Mounting Plate

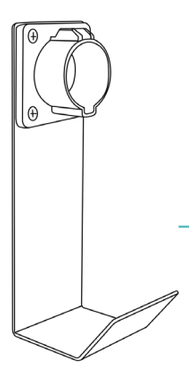

J1772 Connector &
Cable Holster

Nexus Charging Station

J1772 Vehicle
Connector

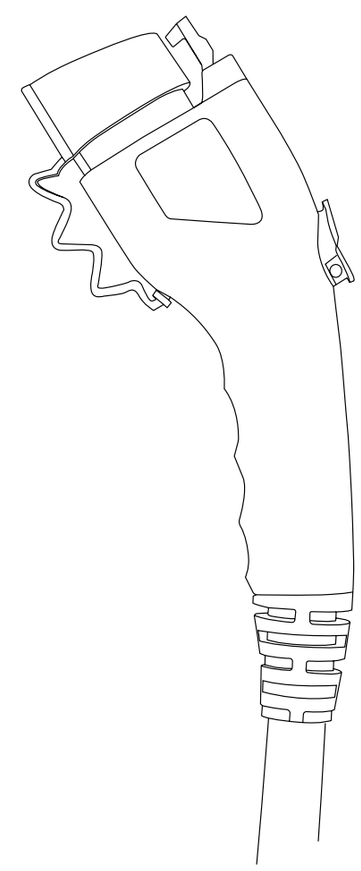

Installation Hardware:

Hex Wrench

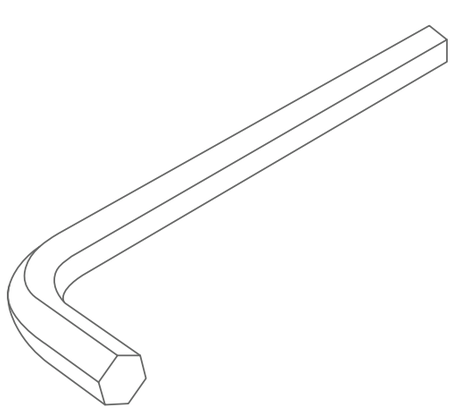

Mounting Plate Screws
& Wall Anchors

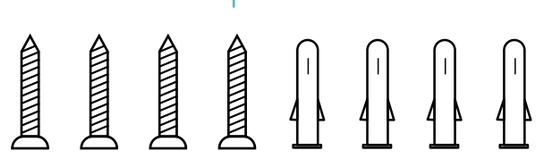

Holster Screws &
Wall Anchors

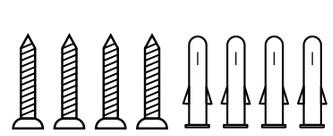

Drilling Template

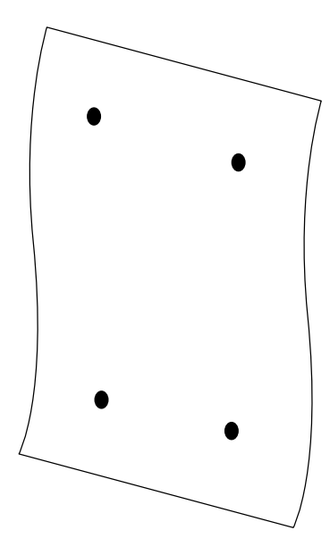

TOOLS REQUIRED

You will need the following tools to complete the installation.

Installation Tools

- Power drill
- Drill bit for pilot holes: 5/32” (4 mm) for wood/drywall; 3/8” (10 mm) masonry bit for concrete or brick
- Stud finder (to locate structural support before mounting)
- Level (bubble or laser)
- Tape measure
- Pencil or marker
- Phillips screwdriver and flathead screwdriver
- Wire strippers
- Torque driver or torque wrench (hardwired model only — for terminal screws)
- Multimeter or voltmeter (to verify voltage before connecting)
- Hammer (if using wall anchors)

NOTE: Hardwired (LECHGNexusHWJ1772): Installation must be performed by a licensed and qualified electrician. The electrician will also need conduit fittings, appropriate conduit, and conductor wire sized to the circuit (see page 9 for wire gauge guidance).

PRE-INSTALLATION PLANNING

WHERE TO INSTALL

- The Nexus can be installed indoors or outdoors. It is rated IP66/NEMA 4 for outdoor use. Choose a location that allows the charging cable to comfortably reach your vehicle's charge port with some slack
- The charging cable to comfortably reach your vehicle's charge port with some slack
- A flat, vertical, structurally sound mounting surface capable of supporting the unit's weight
- No direct exposure to flammable liquids, gases, or vapors
- No risk of the cable being driven over or creating a trip hazard
- Reasonable protection from direct sun in climates where ambient temperatures can exceed 104°F (40°C) — shading is recommended

WARNING

Do not install the Nexus near flammable liquids, vapors, or gases (e.g., near a gas meter, fuel storage, or paint supplies). Do not install where the unit or cable may be struck by a vehicle door, falling objects, or direct water jets (e.g., near a car wash or hose outlet).

MOUNTING HEIGHT

For safe, ergonomic use and proper clearance, mount the Nexus within the following height range. Measure from the floor or grade level to the center of the mounting plate:

Recommended mount height	~39–45" (99–114 cm) above floor — center of unit
Minimum height (outdoor)	24" (61 cm) above floor
Minimum height (indoor)	18" (46 cm) above floor
Maximum height	60" (152 cm)

Allow at least 6” (15 cm) of clearance on all sides of the unit so the cable can hang and loop naturally, and the holster can be positioned conveniently beside it.

MOUNTING SURFACE REQUIREMENTS

The Nexus must be mounted on a surface that can support the full weight of the unit and charging cable.

- Solid wood stud (minimum 1” engagement into stud)
- Plywood panel or equivalent structural backing
- Concrete, cinder block, or brick (use provided anchors)
- Poured concrete wall

If mounting on drywall only, ensure anchors are rated for the unit’s weight. When in doubt, locate a stud.

ELECTRICAL PLANNING

Dedicated Circuit Requirement

The Nexus requires its own dedicated 240V two-pole circuit. Do not share this circuit with any other appliances, outlets, or loads.

- Use a standard (non-GFCI) two-pole breaker — see the Nexus’s built-in CCID protection in Section 2
- Breaker must be sized at 125% of the Nexus’s output per NEC continuous load rules — see the circuit table in Section 2
- Use minimum 6 AWG, 90°C copper wire (THWN-2) for 40–48 A circuits
- For lower output settings, consult your electrician for the correct wire gauge per your local code

BREAKER SIZING QUICK REFERENCE

Match your breaker to the output you want the Nexus to deliver, following the 125% rule:

48 A output	60 A breaker (hardwired only)
40 A output	50 A breaker (plug-in or hardwired)
32 A output	40 A breaker
24 A output	30 A breaker

PLUG-IN MODEL:

Outlet Placement

For **LECHGNexusNEMA14-50J1772**, a licensed electrician must install a NEMA 14-50 receptacle outlet near the mounting location if one is not already installed.

- Install the outlet 12–26 inches (30–66 cm) from where the Nexus will be mounted so the 12 in (30 cm) input cable can reach with slack.
- Orient the outlet with the ground slot facing downward.
- The outlet must be on a dedicated 50 A, 240 V circuit.
- For outdoor installations, use a weather-resistant, outdoor-rated receptacle and cover.

Hardwired Model: Conduit

For **LECHGNexusHWJ1772**, wiring is routed directly into the unit via conduit. The unit accepts conduit entry from the bottom or rear. Use 3/4” conduit as the default; 1” conduit is acceptable if needed. Conduit fittings should be watertight for any outdoor installation.

INSTALLATION & SETUP

⚠️ WARNING — TURN OFF POWER FIRST

Before performing any wiring or electrical work, turn off and lock out the circuit breaker at the panel. Do not restore power until installation is fully complete.

Step 1: Preparation

- Use the provided drill template to mark your desired mounting location on the wall. Ensure the center of the template aligns with a stud or solid mounting surface.
- Use a stud finder to locate structural support, and verify the mounting location is plumb using a level.
- Drill pilot holes at the marked positions using the appropriate bit size for your wall type (5/32” for wood/drywall; 3/8” masonry bit for concrete or brick).
- Insert wall anchors if mounting to drywall without a stud, or to concrete/brick.

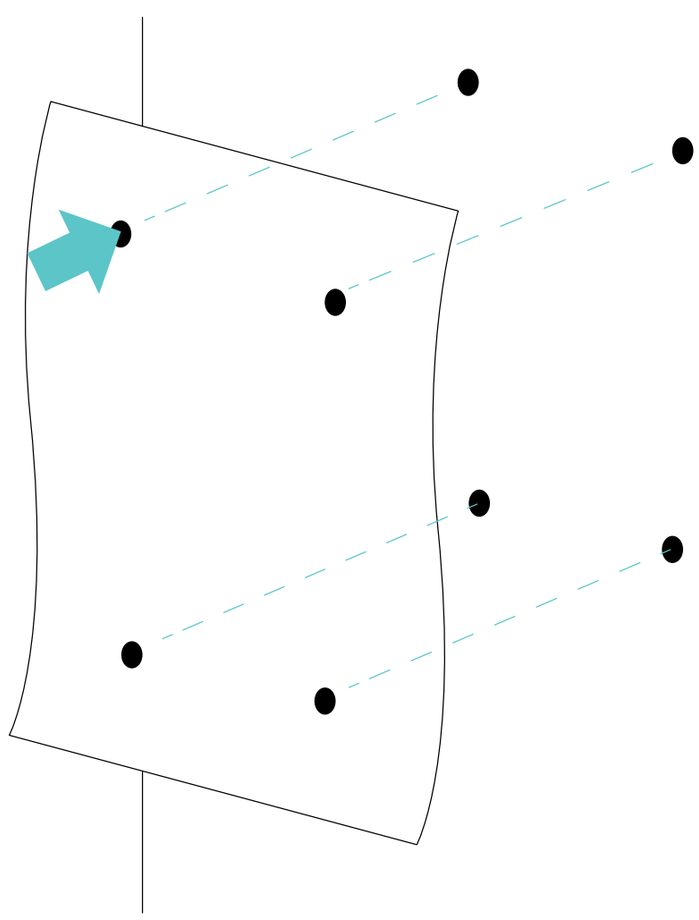

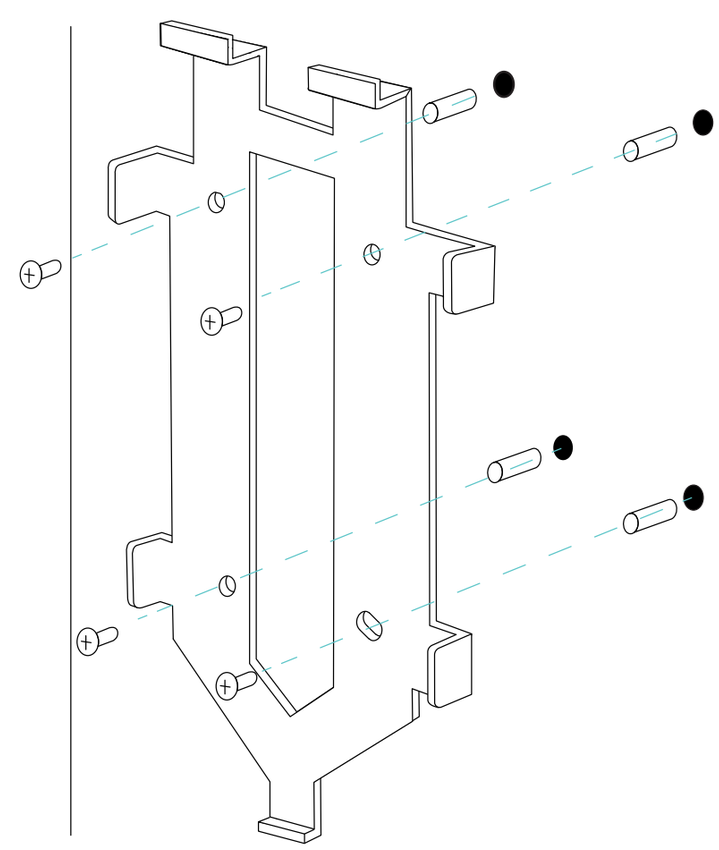

Step 2: Mounting the Nexus

- Align the mounting plate with the pilot holes and secure it firmly to the wall using the provided mounting screws and a Phillips screwdriver.
- Align the slots on the back of the Nexus with the tabs on the mounting plate and slide the unit into place.

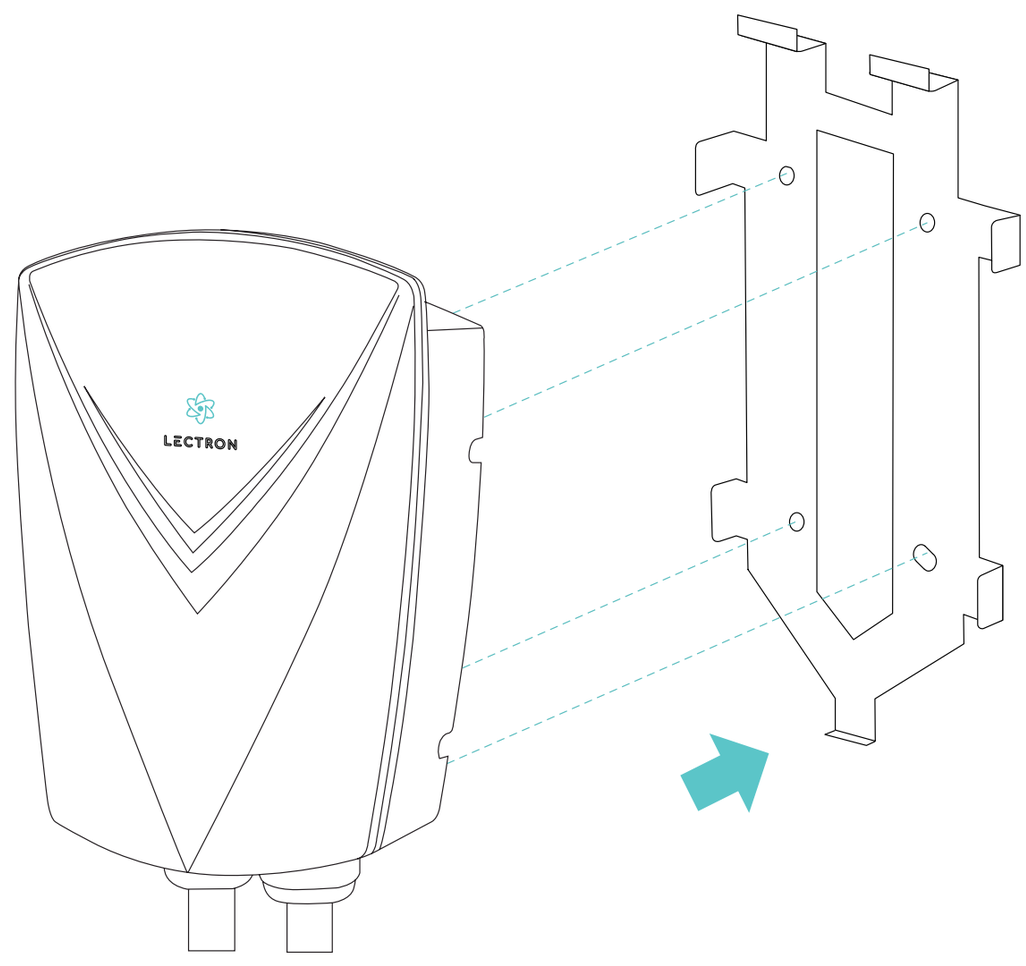

- Secure the unit by installing the locking screw at the bottom of the mounting plate using the provided hex wrench.
- Install the vehicle connector and cable holster approximately 8 inches from the main unit using the provided holster hardware. The holster should be at a height that is comfortable to reach from your typical parking position.

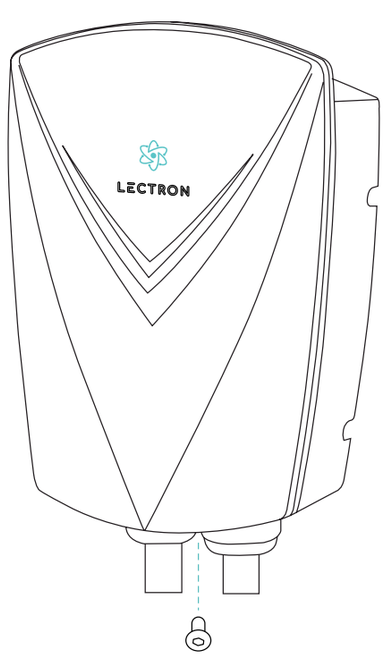

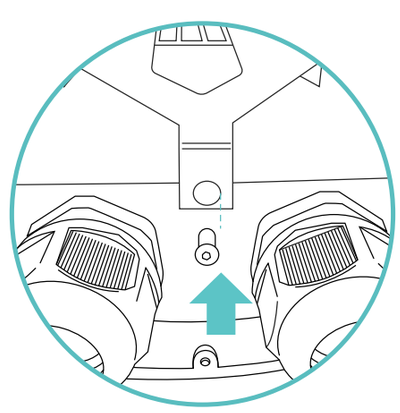

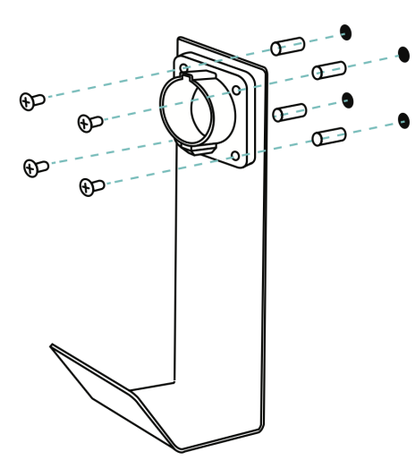

Step 3: Power Connection

LECHGNexusNEMA14-50J1772

- Confirm the circuit breaker is turned off.
- Fully insert the NEMA 14-50 power plug into the 240V NEMA 14-50 outlet. Ensure no blade surfaces are exposed.

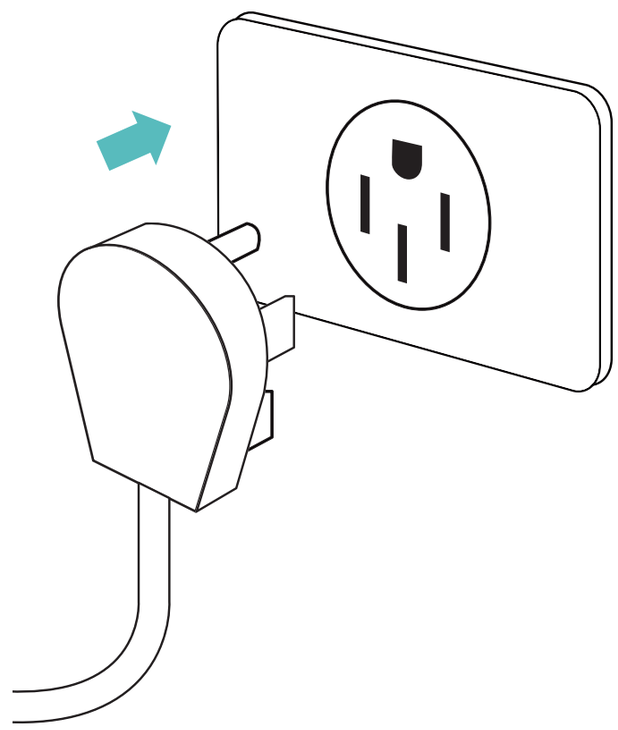

LECHGNexusHWJ1772

- Hardwired installation must be performed by a licensed and qualified electrician.
- Confirm the circuit breaker is turned off.
- Prepare conduit entry: use the bottom or rear knockout depending on your routing path. Seal unused knockouts.
- Route the service wiring through the conduit and into the unit.
- Secure with appropriate cable glands or fittings to protect against moisture and strain
- Strip each conductor approximately 18 mm (3/4”). Crimp ferrules onto each wire end for a secure terminal connection.
- Connect wires to terminal block:
  - Yellow/Green (PE) → Ground terminal
  - Red or Black (L1) → L1 terminal
  - Red or Black (L2) → L2 terminal.

- Use a torque wrench to tighten all terminal screws to the specified torque. Tug each wire firmly to confirm it is fully seated.
- For outdoor installations, apply sealant around the conduit entry point to prevent water ingress.

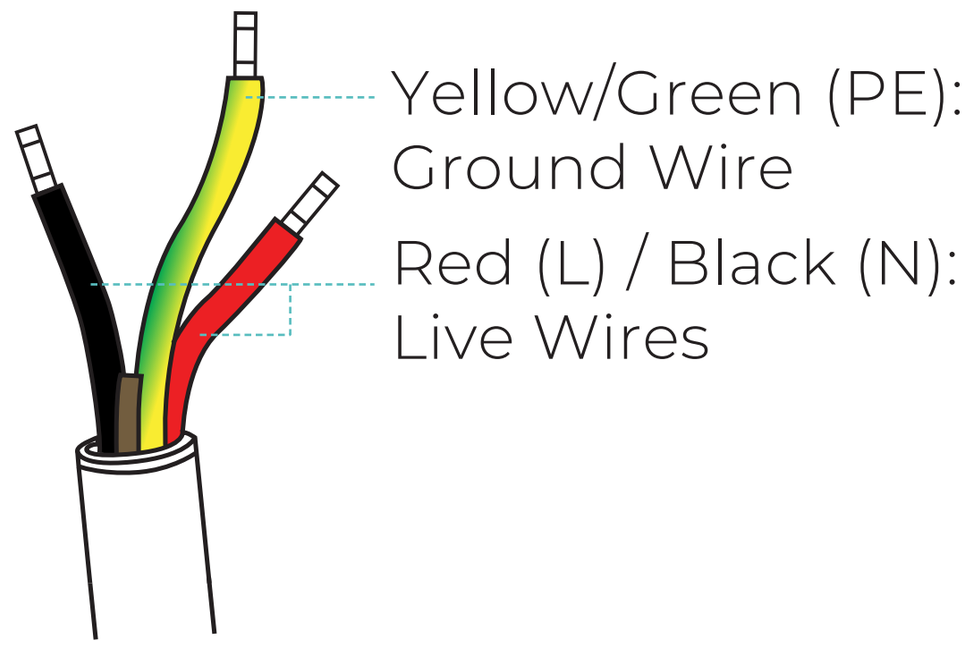

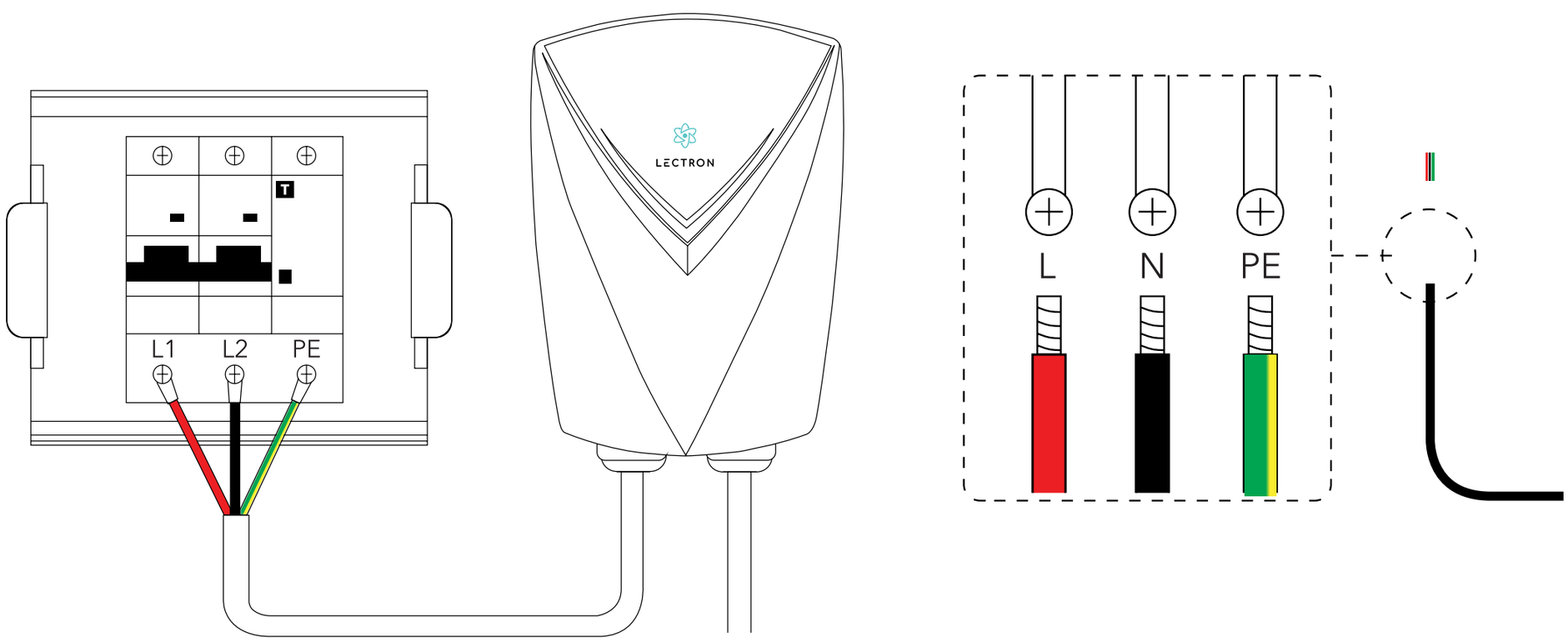

NOTE: Wire specification for 48 A (60 A breaker): Use minimum 6 AWG, 90°C copper conductors (THWN-2 rated). Confirm wire temperature rating and size with your electrician and local code.

Step 4: Power On

- Double-check all connections and that the cover is securely in place.
- Restore power at the circuit breaker.
- The Nexus will initialize. Watch for a solid green LED, which indicates the unit is powered and ready.
- If a red LED or fault code appears, refer to LED INDICATORS & TROUBLESHOOTING before proceeding.

CHARGING YOUR VEHICLE

Before Each Use

Before plugging in, quickly inspect the following:

- Cable and connector for any visible cuts, cracks, or damage
- The charging port area of the connector for debris or moisture
- The enclosure for any signs of damage

Do not use the Nexus if anything appears damaged. Contact Lectron support.

Starting a Charge

1. Ensure the vehicle is parked and turned off.

2. Plug the vehicle connector firmly into the vehicle's charging port until it clicks or locks into place.

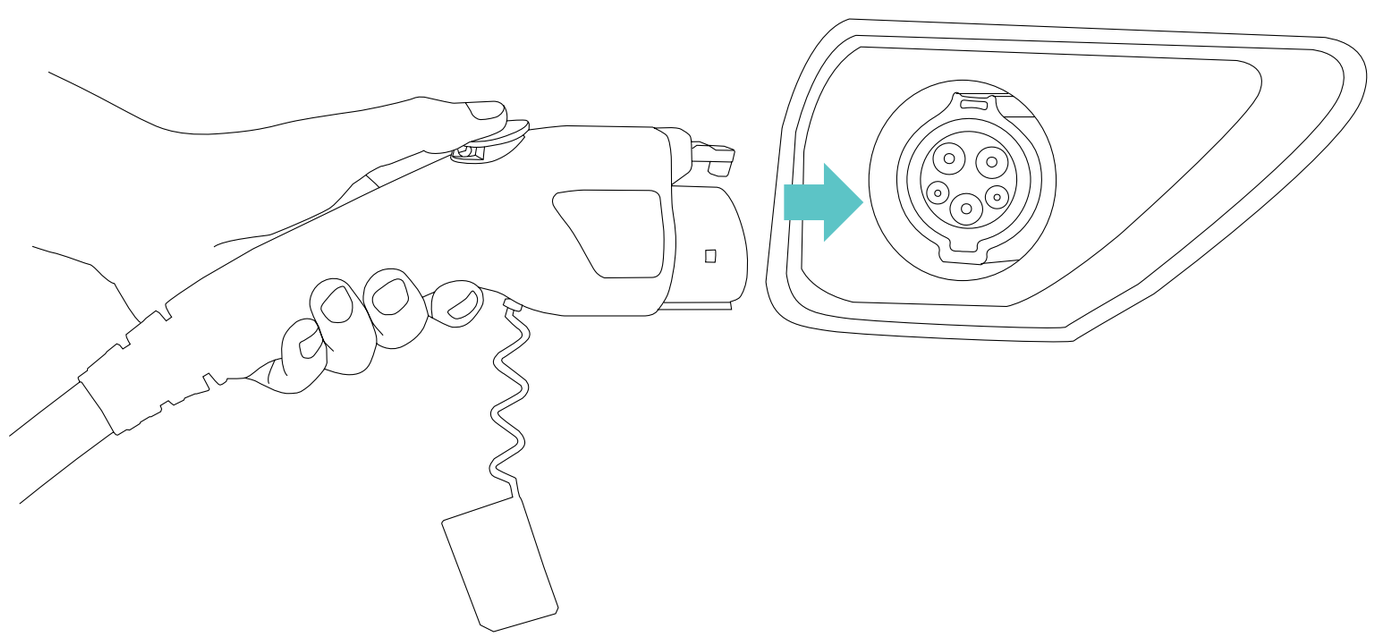

3. The Nexus operates in Plug-and-Charge mode — charging begins automatically once the vehicle accepts the connection. Pulsing green LEDs confirm that charging is in progress.

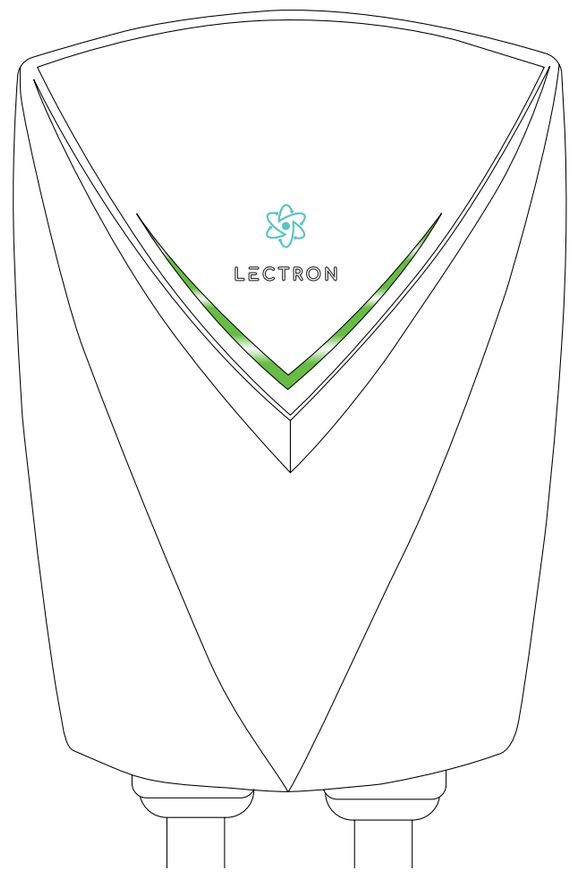

NOTE: Some vehicles have scheduled charging settings that can delay when charging begins even after the cable is connected. If the LED shows ‘connected’ but charging hasn’t started, check your vehicle’s charging settings or app.

Stopping a Charge

1. On the vehicle's infotainment screen or app, pause or stop the charging session if needed, or simply wait until charging completes (solid green LED).

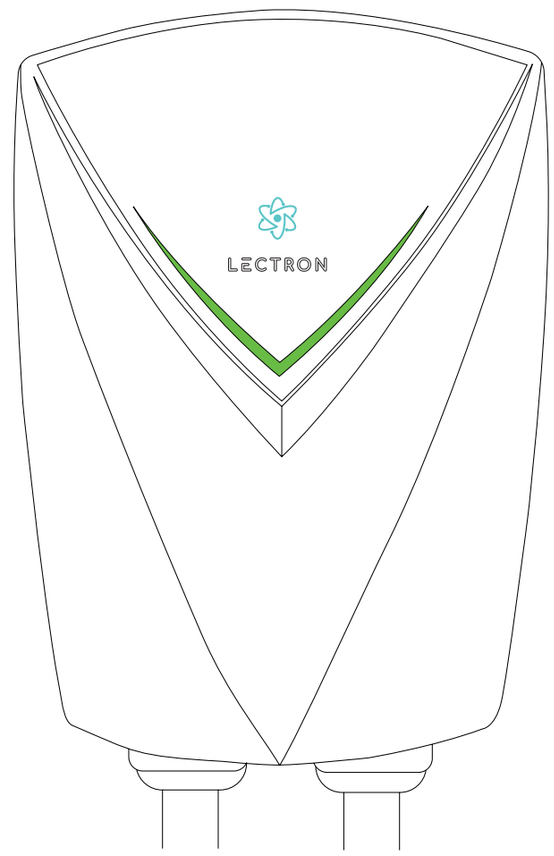

2. Press the button on the charge connector handle (if equipped) or use your vehicle's charge port release to unlock the connector.

3. Remove the connector from the vehicle charge port.

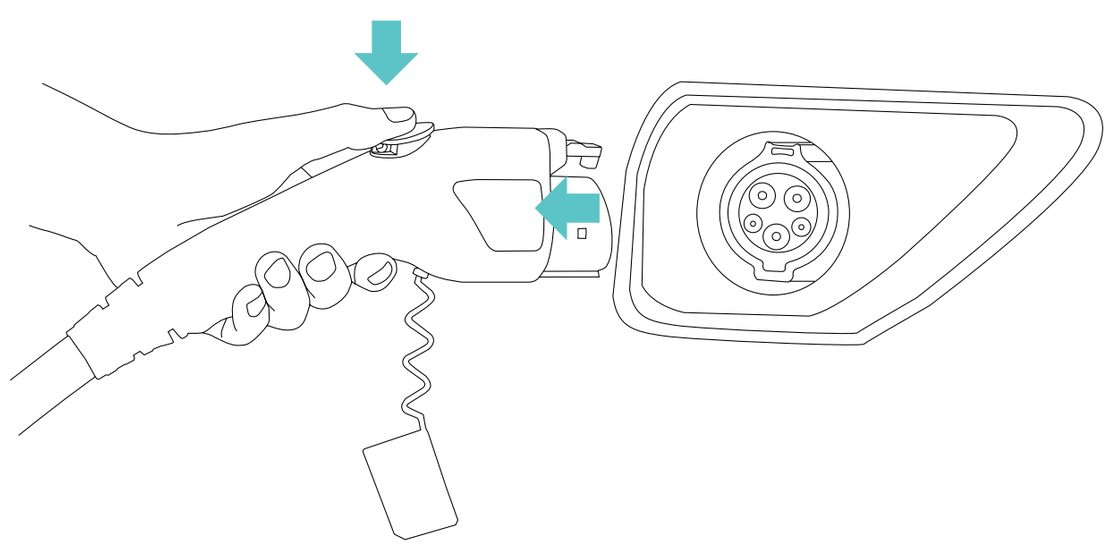

SAFETY

Never attempt to drive the vehicle while the charging cable is connected.

Cable storage

- After disconnecting, wrap the cable neatly and insert the connector into the holster for secure storage.
- Do not leave the cable on the floor, coiled tightly, or in a position where it could be driven over or damaged.

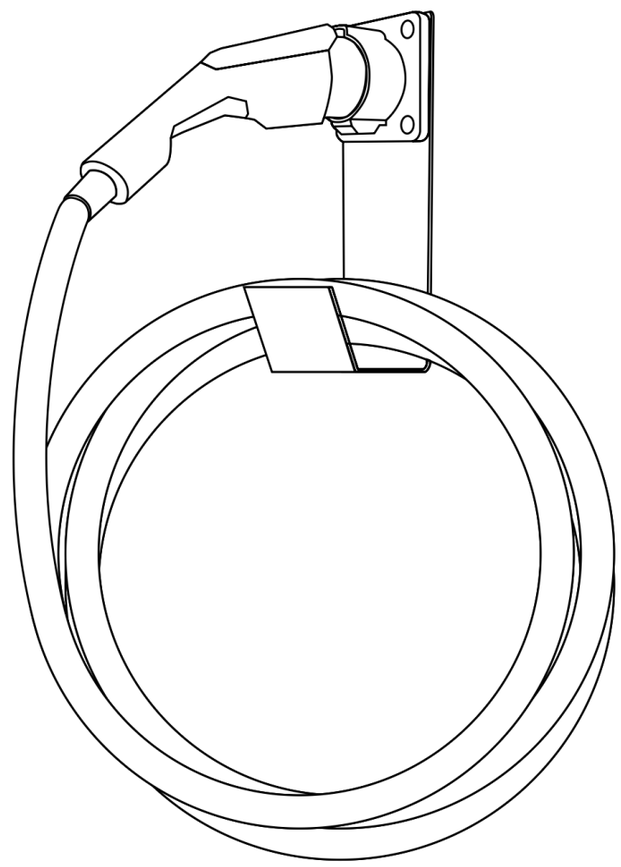

Power Outages During Charging

If power is interrupted while the Nexus is charging a vehicle, charging will resume automatically within a short time once power is restored. The LED will display solid blue while the unit re-establishes communication with the vehicle.

LED INDICATORS & TROUBLESHOOTING

LED Status Reference

LED Color	Pattern	Meaning
Blue	Solid	Ready (idle) — unit is powered and ready to charge
Blue	Pulsing	Connected to vehicle, communication in progress
Green	Pulsing	Charging in progress
Green	Solid (steady)	Charging complete

Thermal Derating

In high ambient temperatures, the Nexus may automatically reduce charging current to protect the unit and maintain safe operation. This is normal. Charging will return to the normal rate once temperatures drop. For optimal performance, install the unit in a shaded area when ambient temperatures regularly exceed 104°F (40°C).

Fault Code Diagnostics

When a red LED fault code appears, press and hold the button on the left side of the unit for 5 seconds to attempt a reboot. If the fault persists after rebooting, use the table below to diagnose and resolve the issue.

Fault	LED Code	What To Do
Control Pilot Fault	1 Red Flash	Unplug from vehicle, wait 10 seconds, reconnect. If it persists, reboot the Nexus (hold button 5 sec).
Under/Over Voltage	2–3 Red Flashes	Check that your breaker is properly sized and that no other high-draw appliances share the circuit. Contact an electrician if the issue continues.

Fault	LED Code	What To Do
Over Temperature	4 Red Flashes	Charging has automatically paused to protect the unit. Move to a cooler location if possible. Charging resumes once the unit cools down.
Over Current	5 Red Flashes	Unplug from vehicle. Check DIP switch setting matches your breaker. Reconnect and retry.
Ground Fault	6 Red Flashes	Do not use the charger. Inspect the cable and connector for damage. Check that the unit is properly grounded. Contact an electrician.
Relay Fault	7 Red Flashes	Reboot the Nexus (hold button 5 sec). If the fault returns, contact Lectron support.
RCD Error	Rapid Blink	Unplug from vehicle and disconnect from power. Inspect the EV connector for debris or moisture. Restore power and retry. If it persists, contact support.

General Troubleshooting Tips

Charging won't start after plugging in:

- Confirm the circuit breaker is on and the outlet has power (for plug-in model)
- Check that the plug or conduit connections are secure
- Check for a solid green 'Ready' LED; if absent, the unit may not be receiving power
- Check your vehicle's scheduled charging settings

Vehicle is connected but not charging:

- Confirm the connector is fully locked into the vehicle charge port
- Check whether the vehicle has charging paused via the vehicle app or scheduled settings
- Try unplugging and plugging the connector

Fault keeps returning after reboot:

- Check all wiring connections at the terminal block (hardwired model)
- Inspect the outlet and breaker (plug-in model)
- Contact Lectron support at contact@lectron.com or visit lectron.com

Before Contacting Support

To help us resolve your issue quickly, please have the following ready:

- Model number (on the product label)
- A short video or photo of the LED behavior during the fault
- Description of what was happening when the fault occurred
- Your installation type (plug-in or hardwired) and circuit breaker size

SUPPORT & WARRANTY

Getting Help

Our team is here to help. Reach us at:

- **Website:** lectron.com
- **Email:** contact@lectron.com

Limited Warranty

The Lectron Nexus is covered by a 3-year limited warranty from the date of original purchase, for residential personal use. The warranty covers manufacturing defects under normal use and installation conditions.

The warranty does not cover:

- Damage caused by improper installation, unauthorized modification, or use outside of the specifications in this manual
- Damage caused by accidents, misuse, neglect, power surges, or external electrical faults
- Normal wear and cosmetic damage (scratches, dents)
- Cable or connector damage resulting from improper storage or physical abuse

To make a warranty claim, contact us at contact@lectron.com with proof of purchase, a description of the defect, and your model number.

Lectron Care Extended Warranty

Extend your coverage beyond the standard 3-year warranty with Lectron Care. Scan the QR code below or visit lectron.com to learn more.

LECTRON Care+

Product Disposal

The Lectron Nexus contains electronic components and must not be disposed of with ordinary household waste. Comply with your local regulations for electronic waste (WEEE) recycling. Contact your municipality or recycling facility for guidance on proper disposal.

WHERE TO FIND US

LECTRON

Search LectronEV on:

lectron.com | contact@lectron.com

Made in China