JOHN DEERE CLOD-BUSTER

JOHN DEERE

OPERATORS MANUAL

JOHN DEERE
CLOD-BUSTER

OMGA10411 A4 English

OMGA10411 A4

LITHO IN THE U.S.A.
ENGLISH

D C Y

O M G A 1 0 4 1 1 A 4

To the Purchaser

This new clod-buster was carefully designed and manufactured to give years of dependable service. To keep it running efficiently, read the instructions in this operator's manual. Each section is clearly identified so you can easily find the information you need. Read the Table of Contents to learn where each section is located.

⚠ This safety alert symbol identifies important safety messages in this manual. When you see this symbol, be alert to the possibility of personal injury and carefully read the message that follows.

"Right-hand" and "left-hand" sides are determined by standing at the rear of the clod-buster and facing in the direction the plow with clod-buster mounted will travel when in operation.

The warranty on this clod-buster appears on your copy of the purchase order which you should have received from your dealer when you purchased the clod-buster.

JOHN DEERE CLOD-BUSTER

PREDELIVERY CHECK LIST

After the clod-buster has been completely assembled, inspect it thoroughly. The following check list is a reminder of points to inspect. Check off each item as it is found satisfactory or after proper adjustment is made.

☐ Check all bolts and nuts to be sure they are tight.

☐ Paint all parts scratched up in shipment.

☐ This clod-buster has been checked and, to the best of my knowledge, is ready for delivery to the customer.

_____ _____

Date *(Serviceman)*

DELIVERY CHECK LIST

☐ Explain the adjustments for implement operation.

☐ Give the customer the operator's manual and tell him that all the things discussed so far are explained and illustrated in the manual in detail plus a lot of other valuable information.

☐ Explain to the customer that when the clod-buster is transported on a road or highway at night or during the day, accessory lights and devices should be used for adequate warning to operators of other vehicles. In this regard, tell customer to check local governmental regulations.

☐ Invite the customer to come in and discuss any problems he may encounter while operating his clod-buster.

☐ To the best of my knowledge this machine has been delivered ready for field use and the customer has been informed as to proper care and operation.

_____ _____

Date *(Serviceman)*

Insert for OMGA 10411 Issue A4 Litho in U.S.A.

AFTER-SALE CHECK LIST

The following is a suggested list of items to be checked at a dealer-customer mutually agreeable time during the first using season:

☐ With clod-buster operating in field conditions, observe the operation. Watch for signs of faulty operation.

☐ Check with the customer as to the performance of the clod-buster.

☐ Acquaint the customer with any special attachment which will help him do a better job.

_____ _____

Date *(Serviceman)*

OWNER REGISTER

Name _____

Post Office _____

County _____ State_____

Date Purchased _____

JOHN DEERE CLOD-BUSTER
REGULAR SHIPPING BUNDLES

PLOWS WITH 28-INCH SPACING

Plow Bottoms					Bundle Number	Description
4	5	6	7	8		
		Quantity				
2	2	2	3	4	GZ 46000	Mounting Arm Assembly
2	2	2	3	4	GZ 46001	Box of Parts
1	-	1	-	2	GZ 46002	Harrow Head 4-Bottom
-	1	-	1	-	GZ 46003	Harrow Head 5-Bottom
-	-	1	1	-	GZ 46005	Harrow Head 2-Bottom
					GZ 46006	Guide Arm Extension (See chart, page 5).
2	2	2	3	4	GZ 46007	Spacer Bracket (2500 series plows only)

PLOWS WITH 32-INCH SPACING

Plow Bottoms					Bundle Number	Description
4	5	6	7	8		
		Quantity				
2	2	3	4	4	GZ 46000	Mounting Arm Assembly
2	2	3	4	4	GZ 46001	Box of Parts
-	1	-	2	1	GZ 46002	Harrow Head 4-Bottom
1	-	1	-	1	GZ 46003	Harrow Head 5-Bottom
-	1	1	-	-	GZ 46005	Harrow Head 2-Bottom
					GZ 46006	Guide Arm Extension (See chart, page 5).
2	2	3	4	4	GZ 46007	Spacer Bracket (2500 series plows only)

ATTACHMENTS

Plow Bottoms						
4	5	6	7	8		
		Quantity				
1	1	-	-	-	GZ 46004	Harrow Head Extension 1-Bottom

JOHN DEERE SERVICE LITERATURE AVAILABLE...

To order these publications fill out this form and the payment information and mail it to the address above. Make checkes payable to Deere & Co. Service Publications. Please allow three weeks for delivery. No COD orders, please. Do not send cash or stamps. To place credit card orders, call **1-800-522-7448**. If you want manuals or catalogs for equipment not shown on this list, provide the model number, serial number, and name of the product.

John Deere Distribution Service Center
Department S/P
P.O. Box 186, Moline, IL 61266-0186

Please send to. . .

Name _____

Address _____

Town _____

State _____ Zip _____

Title	Order No.	Qty.	Price Each
Parts Catalog Clod-Buster	PC-1460		
Operator's Manual Clod-Buster	OM-GA10411		

NOTE: If you want manuals or catalogs for equipment not shown on this list, list the model number, serial number and name of the equipment below.

_____

_____

FOS Manual - Hydraulics	FOS-10B		
FOS Manual - Electrical Systems	FOS-20B		
FOS Manual - Engines	TOS-30B		
FOS Manual - Power Trains	FOS-40B		
FOUR FOS MANUALS (above)	FOS-90 Set		
FOS Manual - Shop Tools	FOS-51B		
FOS Manual - Welding	FOS-52B		
FOS Manual - Belts and Chains	FOS-53B		
FOS Manual - Bearings and Seals	FOS-54B		
FOS Manual - Tires and Tracks	FOS-55B		
FOS Manual - Mowing and Spraying Equipment	FOS-56B		
FOS Manual - Air Conditioning	FOS-57B		
FOS Manual - Fuels, Lubricants and Coolants	FOS-58B		
SET OF EIGHT FOS MANUALS FOS-51B, 52B, 53B, 54B, 55B, 56B, 57B and 58B)	FOS-50 Set		
SET OF ALL TWELVE FOS MANUALS	FOS-160 Set		

Check or money order in U.S. dollars enclosed ..... Total _____

(Do not send cash or stamps)

Prices subject to change without notice.

SP-220 Litho in U.S.A. NOV 73

PARTS CATALOG

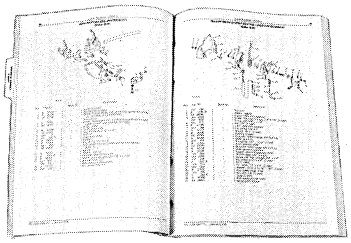

A parts catalog containing exploded view illustrations and lists of all parts is useful when purchasing service parts. Helps identify the correct parts. Useful in assembling and disassembling.

OPERATOR'S MANUAL

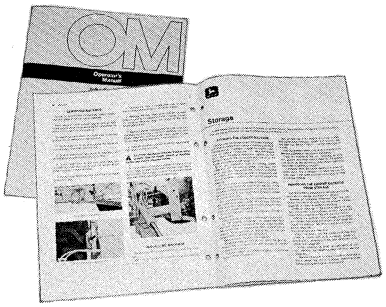

An extra copy of the operator's manual may be important if the copy furnished with your machine is misplaced.

FOS MANUALS

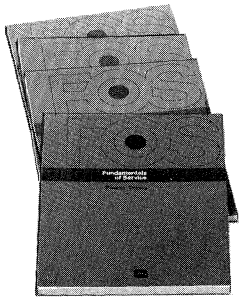

Fundamentals of Service manuals contain basic fundamentals of service and operation. These manuals are applicable to most types and makes of machinery. Each starts with basic theory; covers operation, basic servicing, diagnosis, and testing. They are fully illustrated with plenty of colorful diagrams.

For current prices of John Deere Service Literature, please call 1-800-522-7448

Contents

	Page
OPERATION	2-4
Description	2
Operating Adjustments	2
Transporting	3
Teeth Replacement	4
One Bottom Extension	4
Safety Suggestions	4
ASSEMBLY	5-8

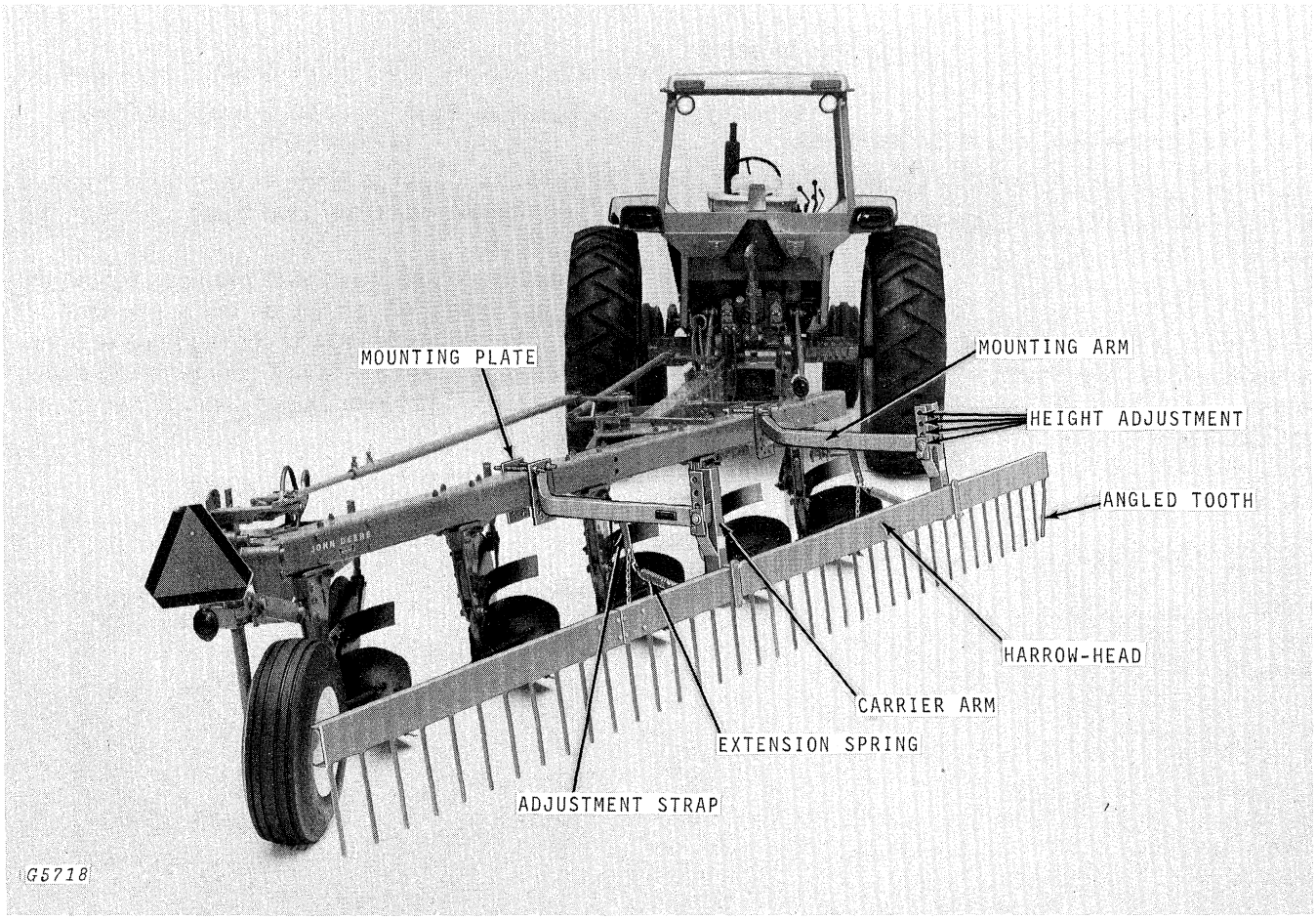

John Deere 6-Bottom Clod-Buster on a 1450 5-Bottom Semi-Integral Moldboard Plow

Operation

HOW THE CLOD-BUSTER WORKS

The John Deere Clod-Buster is available for five plow sizes; 4-, 5-, 6-, 7-, and 8-bottom units. A one bottom extension is available for a field conversion.

The fresh plowed clods are tumbled the length of the clod-buster, breaking them down. The clod-buster also levels the plowed furrows.

The pressure supplied by spring tension on the clod-buster allows the teeth to ride over any obstruction.

The clod-buster easily swings up into the transport position.

OPERATING ADJUSTMENTS

In some areas there is a trend toward fall plowing. Using the clod-buster in the fall will allow disking and harrowing in the spring to be done at a faster ground speed.

To reduce wind erosion during winter months, because the clods have been broken down too fine, decrease the tension on the clod-buster during fall plowing. If soil conditions do not require the use of the clod-buster, swing it up into the transport position and secure. (See page 3).

Height and Pressure Adjustment

With the plow attached to the tractor, bring the plow to rest on a level surface. (See plow operators manual.)

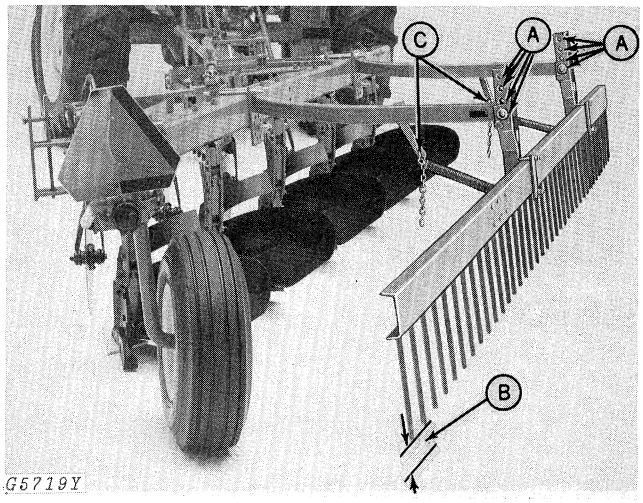

6-Bottom Clod-Buster on a 1450 5-Bottom Semi-Integral Moldboard Plow

Use the four alternate holes on the harrow head at "A" to raise or lower the clod-buster to clear the ground at "B".

For correct pressure on the clod-buster, tighten the chains and extension springs on the adjustment bar at "C". The operating angle of the clod-buster is approximately 45 degrees. Check spring setting during field operation. Tighten or loosen chains if necessary.

X 1277

TRANSPORTING

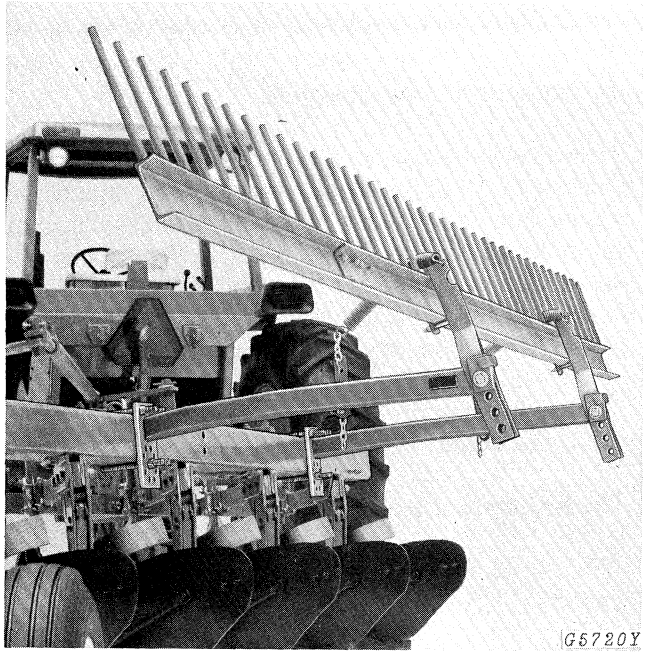

Clod-Buster in Transport Position

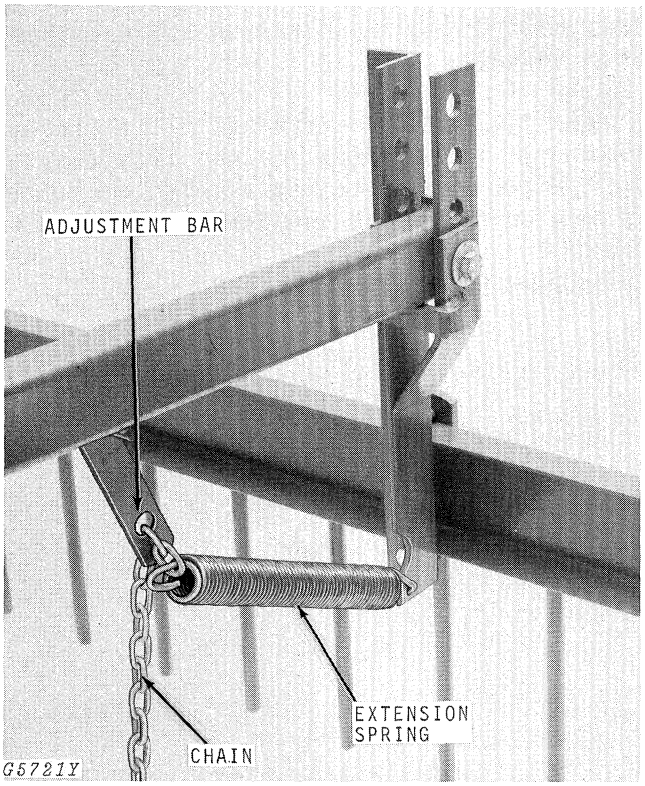

Remove the extension springs and chains from the adjustment bar.

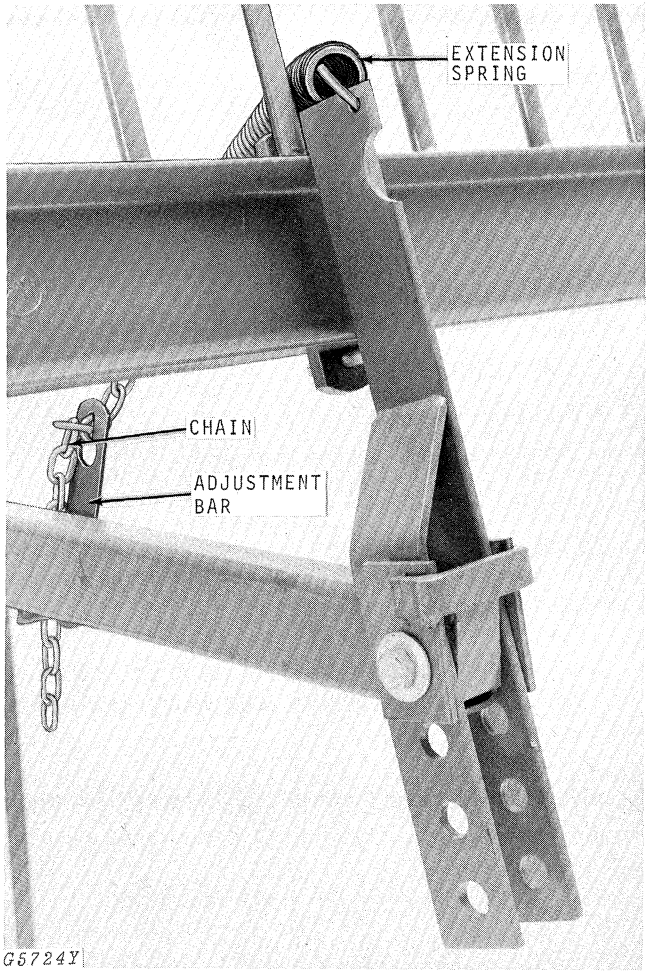

Swing the clod-buster up and over into the stop position. Tighten extension springs and chains to be sure the clod-buster will stay in the transport position.

⚠ CAUTION: When transporting the plow and clod-buster on a road or highway at night or during the day, use accessory lights and devices for adequate warning to operators of other vehicles. In this regard, check local governmental regulations. Various safety lights and devices are available from your John Deere dealer.

TEETH REPLACEMENT

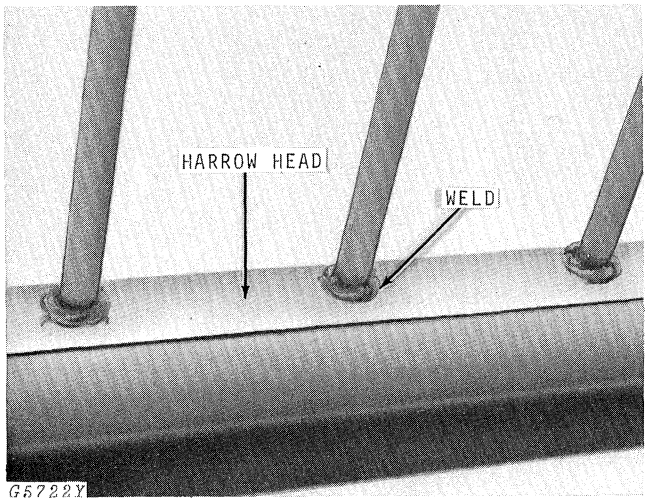

These instructions will help you keep your clod-buster performing efficiently. For additional service, consult your John Deere dealer.

Grind and clean old weld from harrow head. Weld in new tooth where old tooth was with a low hydrogen rod.

IMPORTANT: Weld completely around the base of new tooth.

ONE BOTTOM EXTENSION

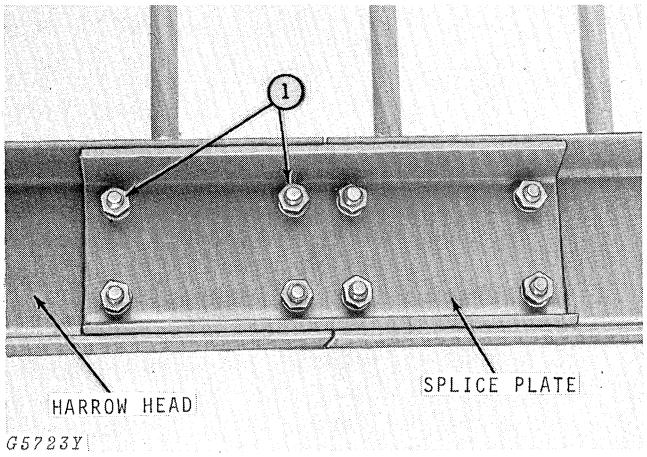

A one bottom extension is available to convert a 4-bottom into a 5-bottom, and a 5-bottom into a 6-bottom clod-buster only.

Installation

1. Attach the extension to the rear of clod-buster with the splice plate and eight 7/16-inch x 1-1/4-inch bolts, lock washers, and nuts. Tighten all bolts.

SAFETY SUGGESTIONS

The safety of the operator was one of the prime considerations in the minds of the engineers when this clod-buster was designed.

However, investigations of thousands of farm accidents show that careless use of farm machinery causes nearly one-third of all farm accidents. You can make your farm a safer place to live and work if you observe the safety suggestions given. Study these suggestions carefully and insist that they be followed by those working with you and for you.

Only one person—the operator—should be permitted on the tractor platform while plow is in operation.

Never clean or adjust a machine that is in motion.

Park or block the plow so it will not roll when disconnected from the tractor drawbar.

Never ride or permit others to ride on the drawbar of the tractor.

Be careful when operating on hillsides because the tractor may tip sideways if it strikes a hole, ditch or other irregularity.

When transporting the clod-buster on a road or highway at night or during the day, use accessory lights and devices for adequate warning to operators of other vehicles. In this regard check local governmental regulations. Lights and devices may be obtained from your John Deere dealer.

Assembly

Assemble the clod-buster as illustrated on the following pages. The illustrations show clearly the parts to be assembled and attached in their proper order. Separate all bundles and arrange conveniently for assembly. Attach all parts loosely; then, tighten after all assembly is completed.

"Right-hand" and "left-hand" sides of the clod-buster are determined by facing in the direction the plow will travel when in use.

The clod-buster is approved for the following John Deere Plows:

Model No.	Guide Arm Extension	Shims	Moldboard Spacing	Spacer Bracket
F110	No	Yes	28″	No
115	No	Yes	28″	No
120	No	Yes	28″	No
125	No	Yes	28″	No
135	Yes	Yes	28″	No
145	Yes	Yes	28″	No
345	No	No	28″	No
350	No	No	28″	No
1150	No	No	32″	No
1250	No	No	32″	No
1350	No	No	32″	No
1450	No	No	32″	No
2350	No	No	32″	No
2450	No	No	32″	No
3350	No	No	32″	No
3450	No	No	32″	No
3100	No	No	32″	No
2500	No	No	32″	Yes

FOR YOUR OWN PROTECTION—

DON'T TAKE A CHANCE!

X 1287

CLOD-BUSTER HEAD COMBINATIONS

Plows with 28-Inch Spacing

Plow Bottoms

4	5	6	7	8	
		Quantity			
1	-	1	-	2	Harrow Head, 4-Bottom
-	1	-	1	-	Harrow Head, 5-Bottom
-	-	1	1	-	Harrow Head, 2-Bottom
2	2	2	3	4	Mounting Arm Assembly

Plows with 32-Inch Spacing

Plow Bottoms

4	5	6	7	8	
		Quantity			
-	1	-	2	1	Harrow Head, 4-Bottom
1	-	1	-	1	Harrow Head, 5-Bottom
-	1	1	-	-	Harrow Head, 2-Bottom
2	2	3	4	4	Mounting Arm Assembly

BOTTOM EXTENSION

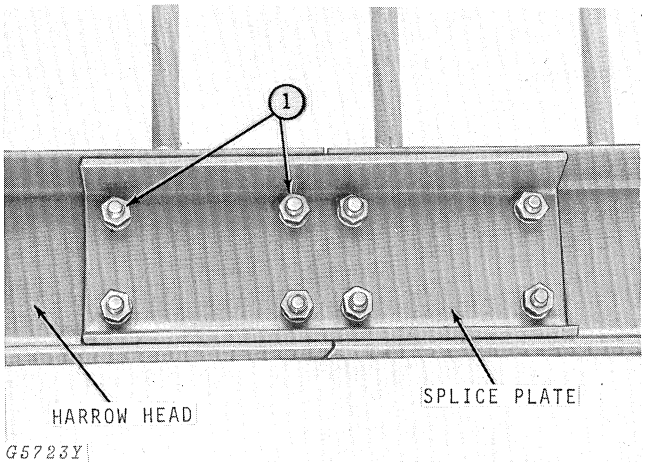

1. Refer to the above tables for the correct clod-buster head combinations. If necessary use the splice plate and eight 7/16-inch x 1-1/4-inch bolts, lock washers, and nuts.

MOUNTING ARM

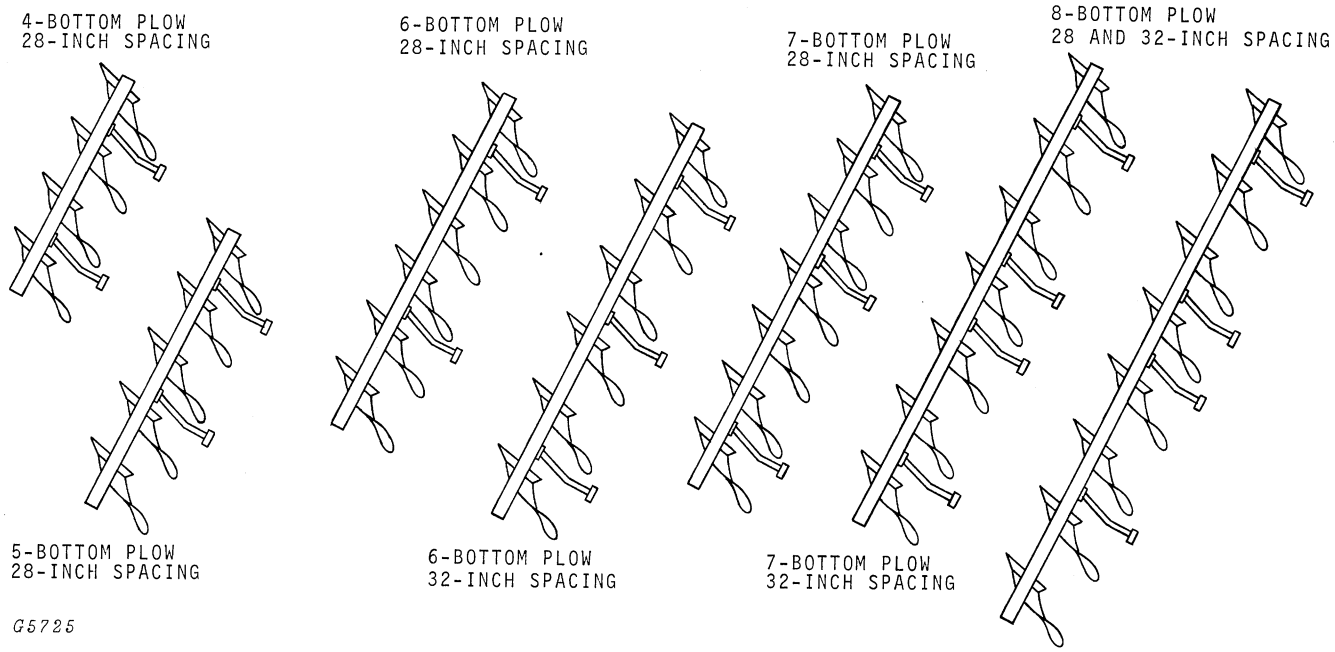

Mounting Arm Location

Welded Seam Truss Box Plows

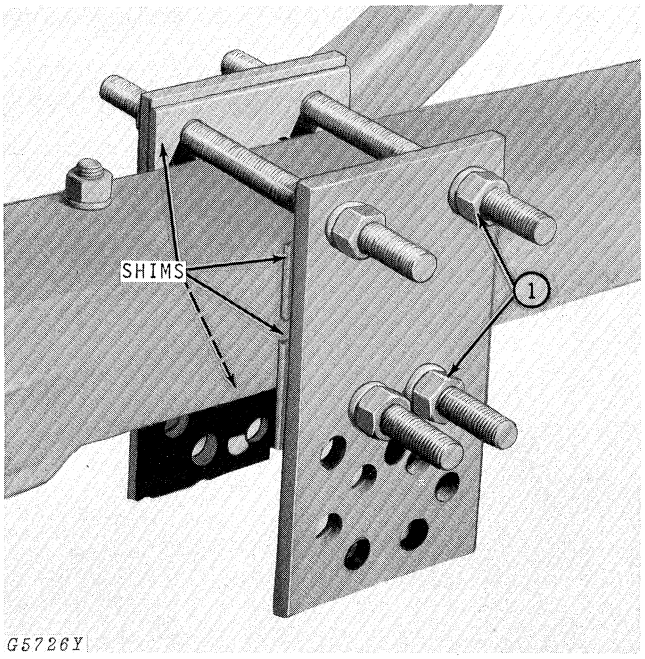

1. Attach mounting arm to truss box of plow using four shims, four 3/4-inch x 11-7/8-inch stud bolts, lock washers, and nuts. Two-hole end of mounting plate must be at the top. Refer to Mounting Arm Location diagram on page 6. Tighten all bolts.

2500 Series Plows

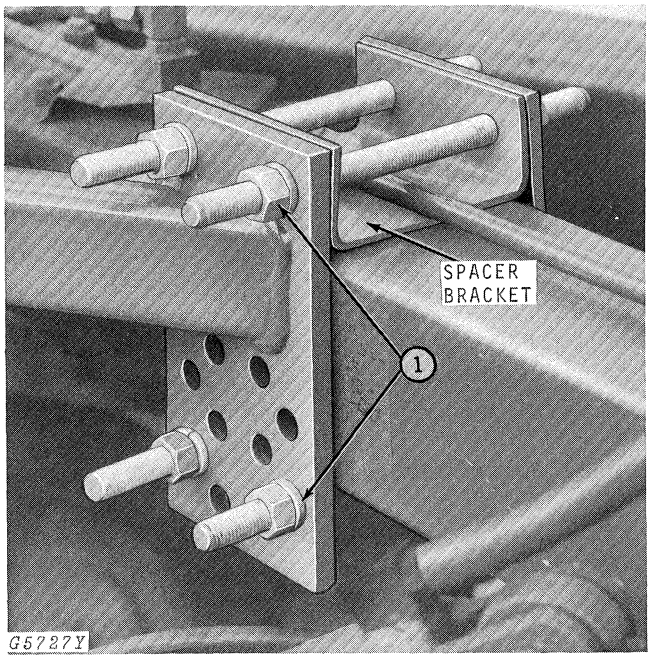

1. Attach mounting arm to truss box of plow using spacer bracket, four 3/4-inch x 11-7/8-inch stud bolts, lock-washers, and nuts. Two-hole end of mounting plate must be at the top. Refer to Mounting Arm Location diagram on page 6. Tighten all bolts.

Standard Assembly Plows

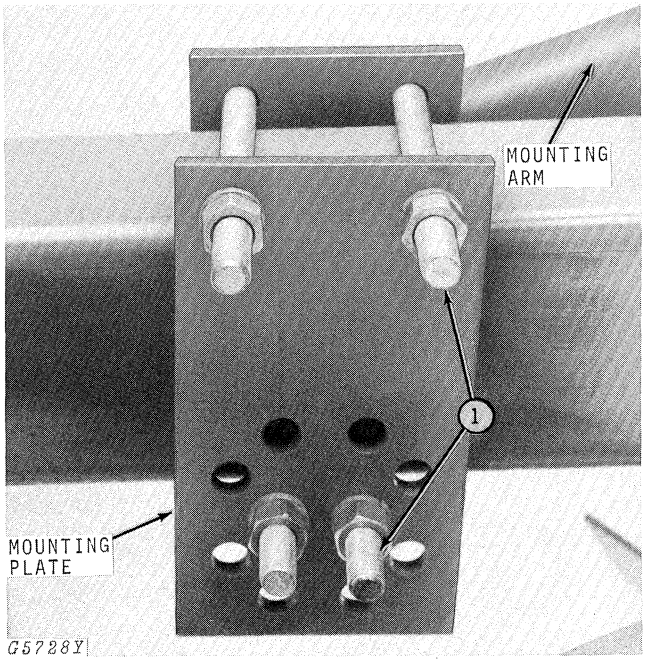

1. Attach mounting arm to truss box of plow, using four 3/4-inch x 11-7/8-inch stud bolts, lock washers, and nuts. Two-hole end of mounting plate must be at the top. Refer to Mounting Arm Location diagram on page 6. Tighten all bolts.

GUIDE ARM EXTENSION

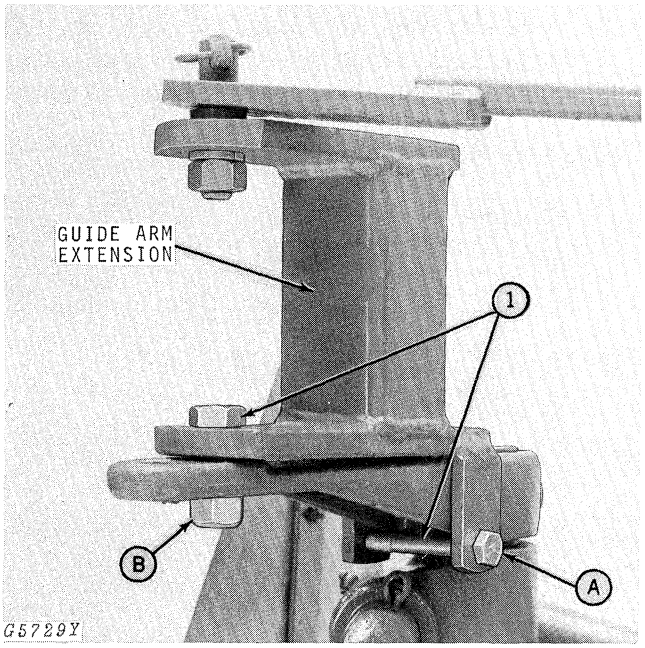

1. If required, attach guide arm extension using the 1/2-inch x 4-inch bolt and lock nut at "A," and 3/4-inch x 2-inch bolt and lock nut at "B". (See chart on page 5.)

HARROW HEAD

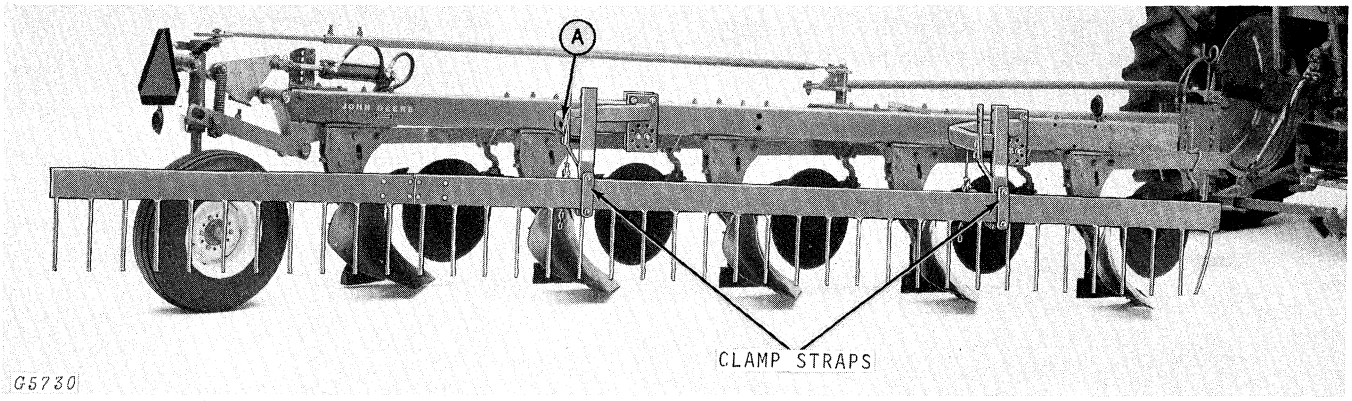

John Deere 6-Bottom Clod-Buster on a 1450 5-Bottom Semi-Integral Moldboard Plow

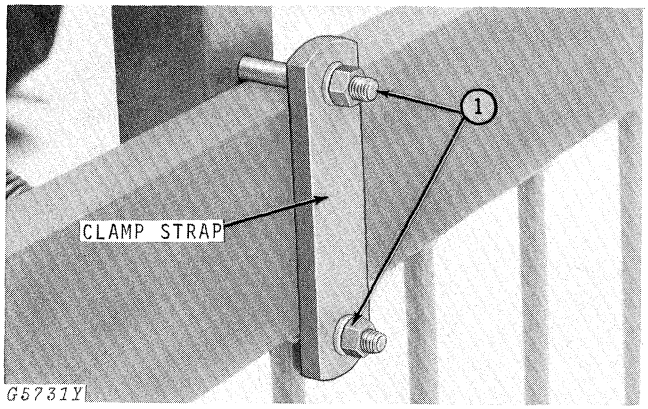

1. Attach harrow head to carrier arm using clamp strap and 1/2-inch x 3-1/2-inch bolts, lock washers, and nuts. Angled tooth must be to the front of the plow.

Attach red reflector at "A".

IMPORTANT: The location of the harrow head must be one bottom forward of the first bottom on the plow.

MEMORANDA

MEMORANDA

MEMORANDA

MEMORANDA

Service to keep you on the job

We, at your John Deere dealer's, pride ourselves in having what it takes to help keep you on the job . . . where the profits are

John Deere Parts.
We help minimize downtime by putting the right parts in your hands in a hurry. That's why we maintain a large and varied inventory—to stay a jump ahead of your needs.

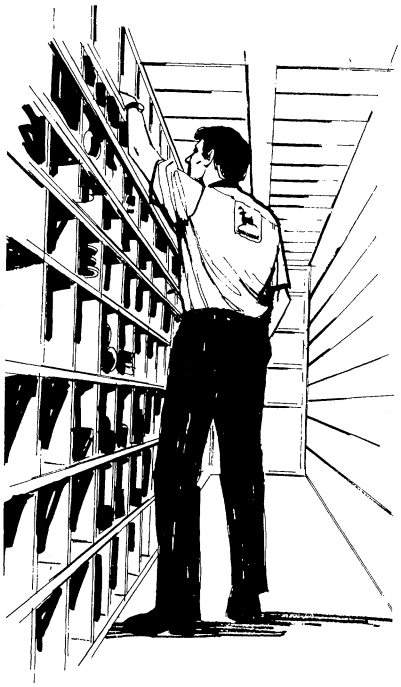

The right tools.
Precision tools and testing equipment enable our Service Department to locate and correct troubles quickly . . . to save you time and money.

Well-trained mechanics.
School is never out for John Deere servicemen. Training schools are held regularly to be sure our personnel know your equipment and how to maintain it. Result? Experience you can count on!

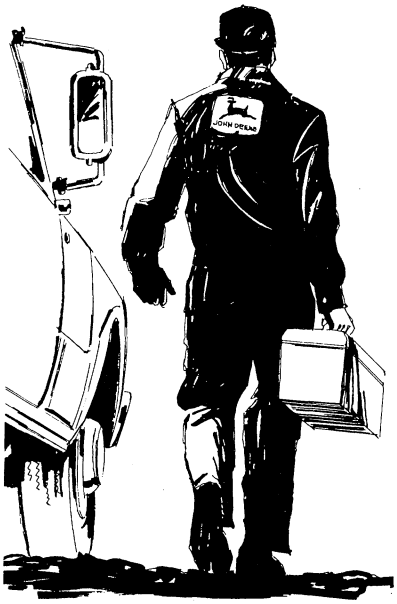

Prompt service.
Our goal is to provide prompt, efficient care when you want it and where you want it. We can make repairs at your place or at ours, depending on the circumstances. See us. Depend on us.

John Deere Service Superiority: We'll be around when you need us