CAM
LOBE
MOTORS

JOHN DEERE

OPERATORS MANUAL

CAM LOBE
MOTORS

OMAR107151 L4 English

JOHN DEERE COMPONENT WORKS
OMAR107151 L4

LITHO IN THE U.S.A.
ENGLISH

D C Y
O M A R 1 0 7 1 5 1 L 4

To The Purchaser

SAFETY

This safety alert symbol indicates important safety messages in this manual. When you see this symbol, be alert to the possibility of personal injury and carefully read the message that follows.

MEASUREMENTS

This operator's manual contains SI Metric equivalents which follow immediately after the U.S. customary units of measure.

SERIAL NUMBER

Record the serial number of each motor in the space provided in the Specifications section. Provide this information to your dealer when ordering parts.

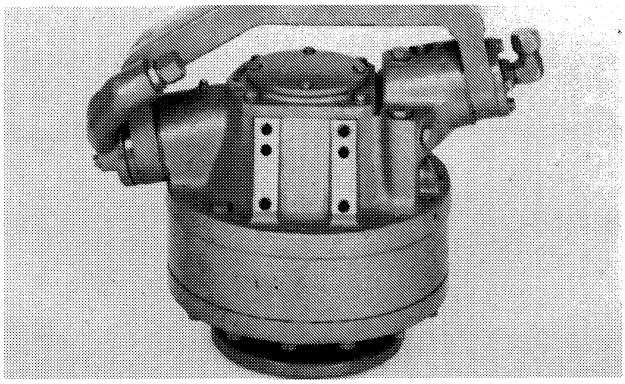

Steerable Camlobe Motor (L.H. Shown)

Contents

SAFETY 2

IDENTIFICATION 4

OPERATION 7

LUBRICATION AND MAINTENANCE 8

TROUBLESHOOTING 11

SPECIFICATIONS 12

R70;070600 157 311084

1R4;01 051184

AVOID HIGH-PRESSURE FLUIDS

Escaping fluid under pressure can penetrate the skin causing serious injury. Relieve pressure before disconnecting hydraulic or other lines. Tighten all connections before applying pressure. Keep hands and body away from pinholes and nozzles which eject fluids under high pressure. Use a piece of cardboard or paper to search for leaks.

If ANY fluid is injected into the skin, it must be surgically removed within a few hours by a doctor familiar with this type injury or gangrene may result.

AB6;X9811 053;FLUID 100584

USE ADEQUATE SERVICE FACILITIES

Keep service area clean and dry. Wet or oily floors are slippery. Wet spots can be dangerous when working with electrical equipment.

Be sure all electrical outlets and tools are properly grounded.

Use adequate light for job at hand.

Use lifting equipment and safety stands which have adequate strength for the job being performed. Each motor weighs approximately 400 lb (182 kg). Plan proper handling procedures to avoid the risk of personal injury.

Know where first aid kit and fire extinguishers are located, and know how to use them.

R70;070600 158 311084

WEAR SAFETY EQUIPMENT

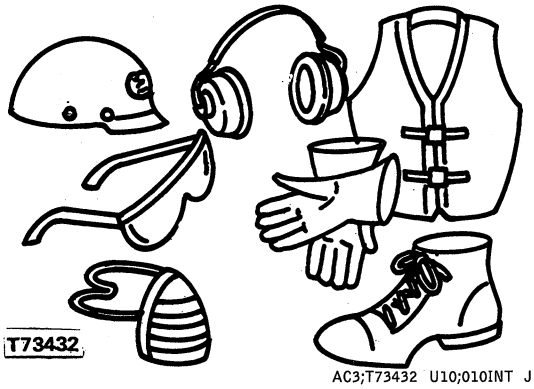

AC3;T73432 U10;010INT J 250484

PROTECT AGAINST NOISE

Prolonged exposure to loud noise can cause impairment or loss of hearing.

Wear a suitable hearing protective device such as earmuffs (A) or earplugs (B) to protect against objectionable uncomfortable loud noises.

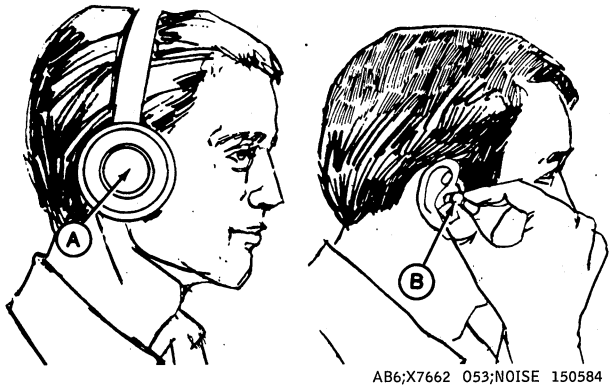

AB6;X7662 053;NOISE 150584

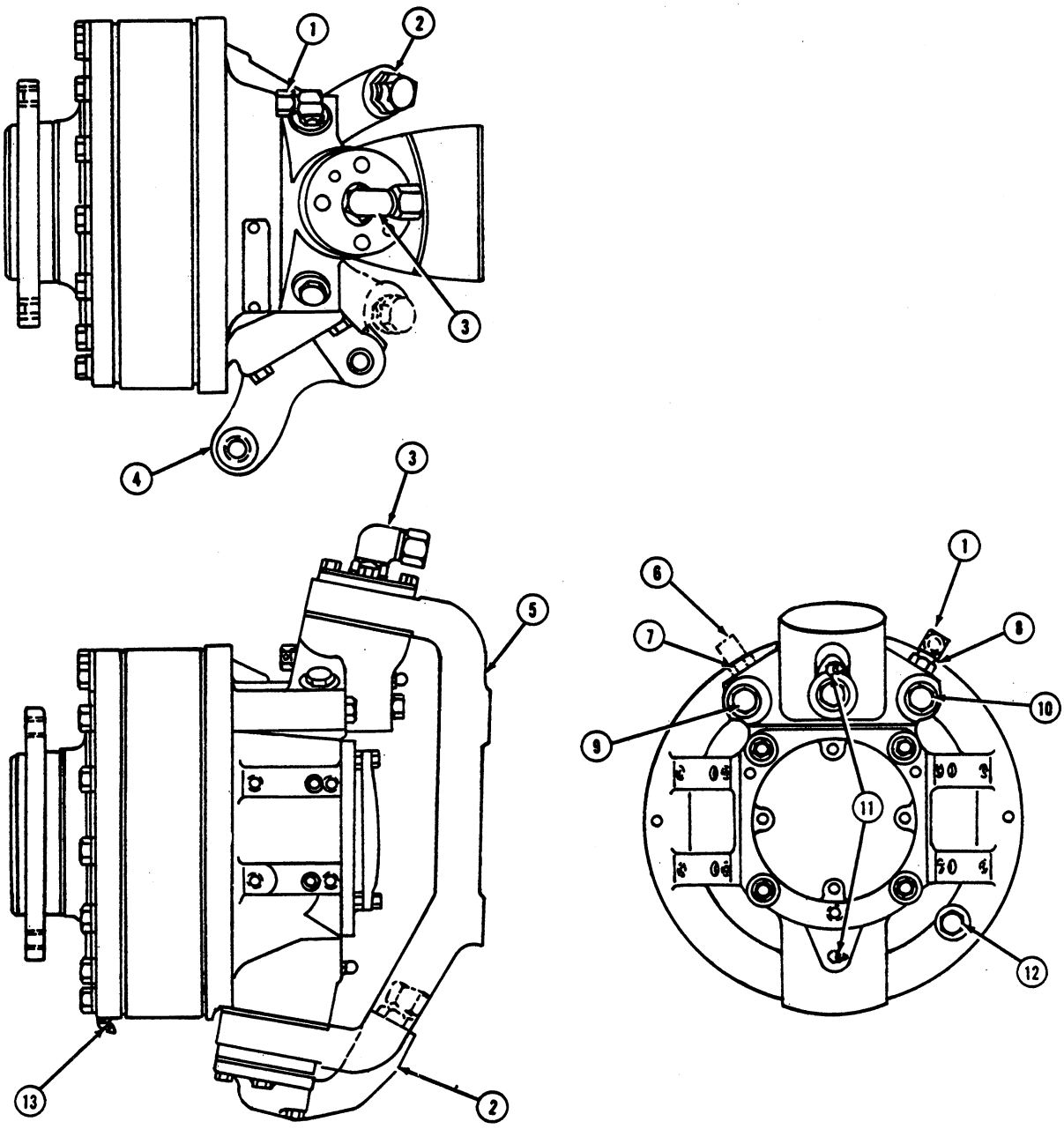

1—Case Drain Fitting (L.H. Motor)
2—Pressure Oil Inlet
3—Return Oil Fitting
4—Steering Arm
5—Yoke
6—Case Drain Fitting (R.H. Motor)
7—Destroke Pump Plug (L.H. Motor)
8—Destroke Pump Plug (R.H. Motor)
9—Case Inlet Check Valve Plug (L.H. Motor)
9—Case Outlet Check Valve Plug (R.H. Motor)
10—Case Outlet Check Valve Plug (L.H. Motor)
10—Case Inlet Check Valve Plug (R.H. Motor)
11—Pivot Pin Grease Fittings
12—Case Drain Plug
13—Axle Bearing Grease Fitting

Steerable Motor

4AA;R38999 R70;070600 159 271184

1R4;04 051184

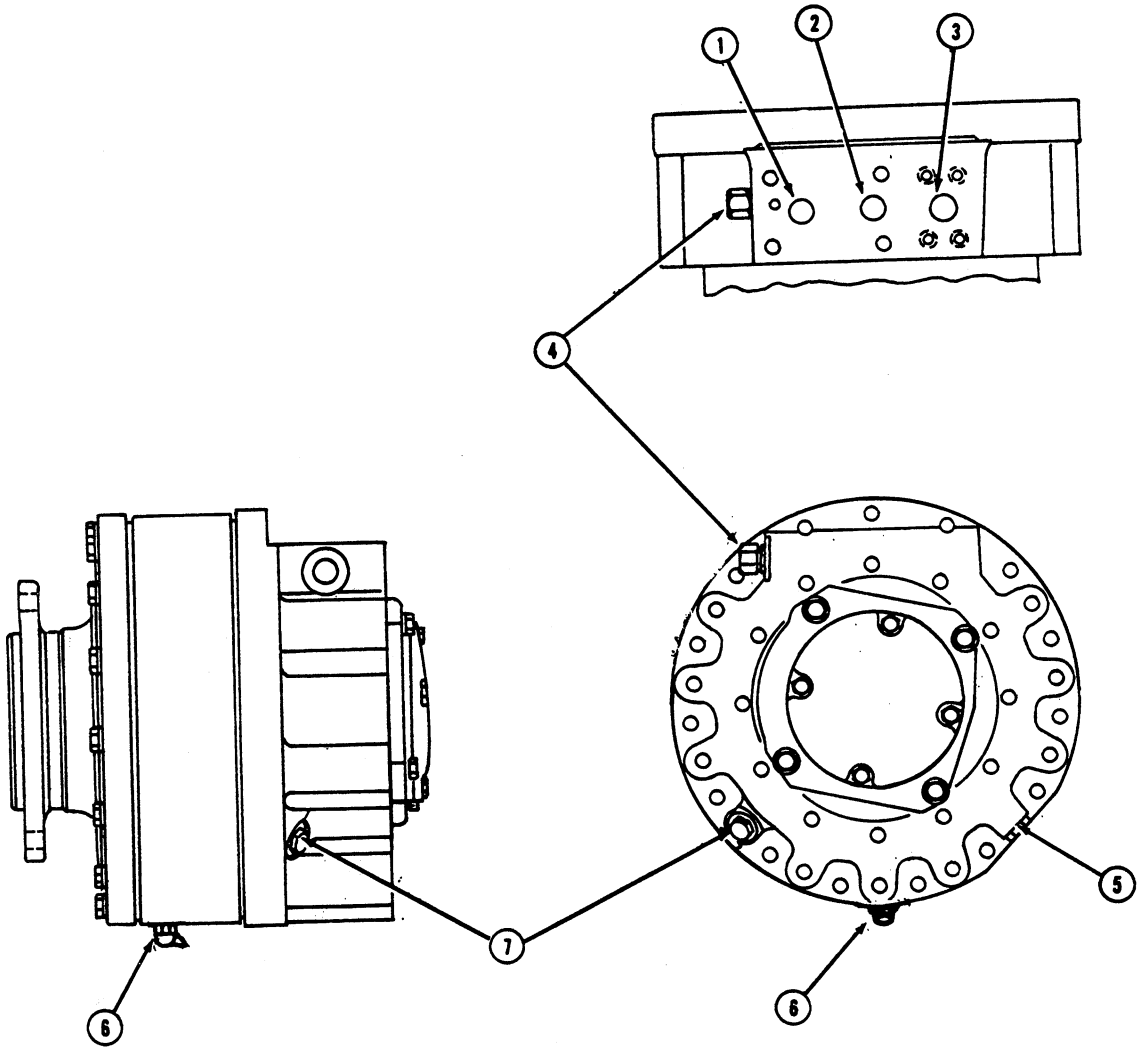

1—Pressure Oil Inlet
2—Pressure Oil Inlet
3—Return Oil Port
4—Case Drain Fitting
5—Destroke Pump Plug
6—Axle Bearing Grease Fitting
7—Case Drain Plug

Non-Steerable Motor

4AA;R39000 R70;070600 160 271184

1R4;05 051184

IDENTIFICATION PLATES

Each motor has an identification plate as shown below. The letters and numbers stamped on the plate identify the component. All these characters are needed when ordering parts or identifying the motor. ACCURATELY record these characters in the space provided in the Specifications section.

R70;070600 161 011184

MOTOR IDENTIFICATION PLATE

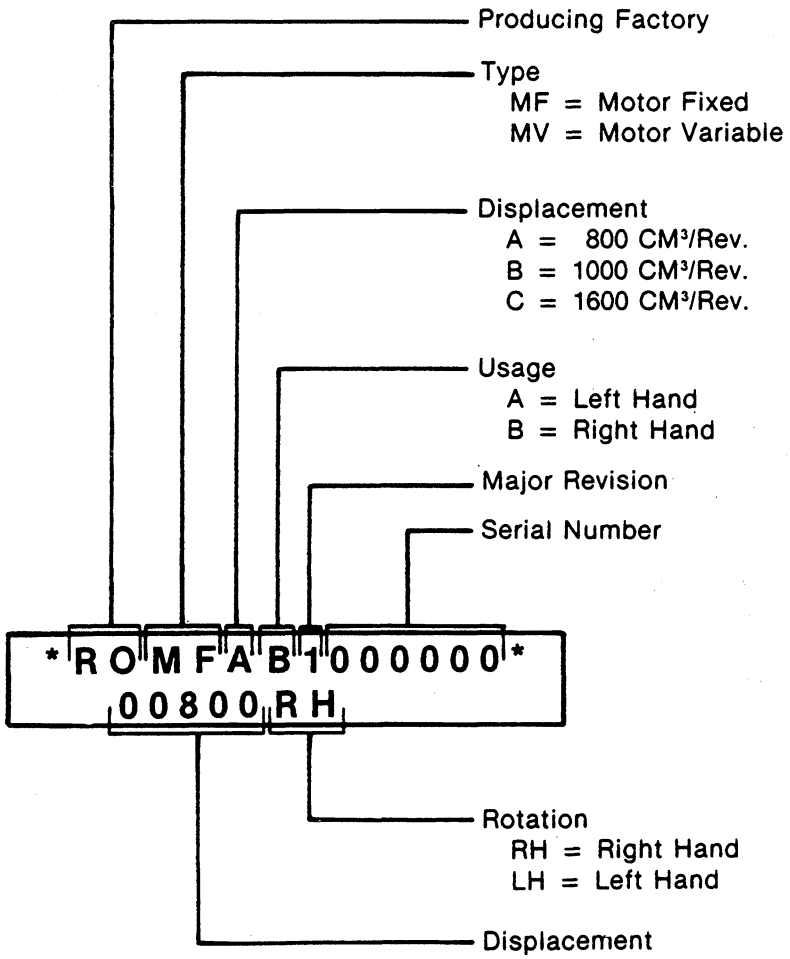

The motor identification plate is located on top of the steerable motor and next to the destroke pump plug on the non-steerable motor.

List the entire first line of the identification plate in any correspondence.

4AA;R39001 R70;070600 162 011184

1R4;06 051184

BREAK-IN

A specific break-in is not mandatory, however, during the first 50 hours of operation, the motor should be observed closely for leaks, unusual noise or operation.

R70;070600 163 271184

TRANSPORTING

If the cam lobe motor is used as a propel motor, do not engage it while traveling at road transport speeds to avoid damage to the motor.

R70;070600 164 301184

STORAGE

Steerable motor: Cap all fittings and fill the motor with hydraulic oil. Lubricate the pivot pins and axle bearing. Coat all unpainted surfaces with a light coating of multi-purpose grease.

Non-steerable motor: Install the port shipping plates and gaskets. Cap all fittings and fill the motor with hydraulic oil. Lubricate the axle bearing. Coat all unpainted surfaces with a light coating of multi-purpose grease.

R70;070600 165 271184

GENERAL PURPOSE GREASE

Depending upon the expected air temperature range during the service interval, use grease as shown on the adjoining temperature chart.

John Deere Multipurpose Grease is recommended. If other greases are used, use:

—SAE Multipurpose Grease
—SAE Multipurpose Grease containing 3 to 5 per cent molybdenum disulfide.

At temperatures below -30°C (-22°F), use arctic greases such as those meeting Military Specification MIL-G-10924C.

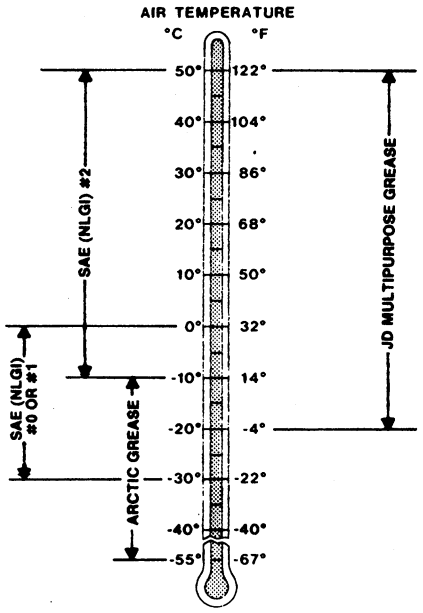

AB6;X9326 053;GREAS2 120584

HYDRAULIC FLUIDS

John Deere cam lobe motors will operate satisfactorily using oils with a wide range of viscosity.

Oils meeting the following specifications are recommended.

Allis-Chalmers Corp.
- Part No. 272843
- Part No. AX33675

J. I. Case
- MS 1205
- MS 1210
- MS 1213

Clark
- MS-68

Deere
- JDM J14C
- JDM J20
- JDM J21C

Denison
- HF-0

Engine Oils
- SD/CC or higher

Ford
- ESEN M2C86-B
- ESEN M2C159-A
- ESN-M2C41-B
- ESN-M2C48-B
- ESN-M2C134B
- ESW-M2C33-F

International Harvester
- B-6

ISO Standard
- HM-32
- HM-46
- HM-68

Massey-Ferguson
- CMS M1127
- CMS M1129A
- CMS M1135
- CMS M1139

Military
- Mil-L-2104D
- Mil-L-21260C
- Mil-L-46152B
- Mil-L-46167A

Sperry/New Holland
- Part No. 287530

White Farm Equipment
- Q-1766

R70;070600 166 271184

FILTERS

Effective filtration will improve the performance and life of the entire system.

A filter with a minimum BETA 10 ratio rating of 1.5 is recommended.

Filter the oil when filling the motor for the first time, or filling after service.

R70;070600 167 271184

SERVICE INTERVAL

Change filters annually or more frequently in severe conditions.

Lubricate motor pivot pins and axle bearings every 10 hours of operation. Apply grease until it appears at seals.

R70;070600 170 271184

INSTALLING THE MOTOR

1. Clean the mounting surface of paint, rust or dirt.

2. Install the motor with grade 8 or F cap screws and tighten to 240 lb-ft (325 N·m).

R70;070600 168 271184

START UP

1. Check to be sure the circuit being operated is cleaned and flushed before installing motor.

2. Fill the motor with oil.

3. Test the motor, with the wheels off the ground or disconnected from their load, for proper rotation and shifting.

R70;070600 169 271184

Troubleshooting

Problem	Possible Cause	Possible Remedy
Motor not engaging in forward or reverse.	Low hydrostatic fluid level.	Add fluid/check for leaks.
	Excessive motor leakage.	Seals worn, damaged, or improperly installed.
		Manifold to carrier interface worn/damaged.
Motor engages but has low or no torque.	Low pump output.	Test/repair pump.
	Low fluid level.	Check for leaks.
	Plugged or partially plugged filter.	Check/replace filter.
	Excessive motor leakage.	Seals worn, damaged or improperly installed.
		Manifold-to-carrier interface worn/damaged.

R70;070600 171 271184

Specifications

Type			Direct drive cam lobe motor, (Reversible)
	Steerable		Single speed only (Forward and Reverse)
	Non-Steerable		Single speed (Forward and Reverse) Three speed (Three speeds forward and two speeds reverse)
Motor Displacement	800 cm^3/Rev. (48.8 $in.^3$/Rev.)	1000 cm^3/Rev. (61 $in.^3$Rev.)	1600 cm^3/Rev. (97.6 $in.^3$/Rev.)
Axle Output Torque	0.1273 N·m/kPa (0.648 lb-ft/psi)	0.1592 N·m/kPa (0.8096 lb-ft/psi	0.2546 N·m/kPa (1.295 lb-ft/psi
Maximum Operating Pressure			
Continuous	20,000 kPa (2900 psi)	Same	Same
Intermittent	38,000 kPa (5500 psi)	Same	Same
Recommended Maximum Operating Temperature	80°C (175°F)	Same	Same
Maximum Speed	150 RPM	Same	Same
Maximum Vertical Load at Axle Flange	1600 kg (3527 lb)	Same	Same
Approximate Weight (Full of Oil)	172 kg (380 lb)	182 kg (401 lb)	182 kg (401 lb)
Wheel Oil Capacity	3.8 L (1 gal)	Same	Same

R70;070600 172 301184

MOTOR SERIAL NUMBER PLATE

Enter your motor serial number in the space provided. Your dealer/distributor will need it when ordering parts.

SERIAL PLATE TOP LINE

_____

_____

_____

_____

_____

_____

R70;070600 315 271184

1R4;12 051184

JOHN DEERE SERVICE LITERATURE AVAILABLE...

To order these publications fill out this form and the payment information and mail it to the address above. Make checkes payable to Deere & Co. Service Publications. Please allow three weeks for delivery. No COD orders, please. Do not send cash or stamps. To place credit card orders, call **1-800-522-7448**. If you want manuals or catalogs for equipment not shown on this list, provide the model number, serial number, and name of the product.

John Deere Distribution Service Center, Department S/P,
P.O. Box 186, Moline, IL 61266-0186

Please send to...

Name _____

Address _____

Town _____

State _____ Zip _____

Title	Order No.	Qty.	Price Each
Parts Catalog Cam Lobe Motors	PC-2027		
Operator's Manual Cam Lobe Motors	OM-AR107151		
Technical Manual Cam Lobe Motors	TM-1289		

NOTE: If you want manuals or catalogs for equipment not shown on this list, list the model number, serial number and name of the equipment below.

CUT HERE

FMO Manual - Tractors	FMO-10102B		
FMO Manual - Tillage	FMO-11102B		
FMO Manual - Planting	FMO-12102B		
FMO Manual - Crop Chemicals	FMO-13102B		
FMO Manual - Hay & Forage Harvesting	FMO-14102B		
FMO Manual - Combine Harvesting	FMO-15102B		
FMO Manual - Preventive Maintenance	FMO-16103B		
FMO Manual - Machinery Management	FMO-17102B		
FMO Manual - Machine Safety	FMO-18102B		
FMO Set of 9 Manuals above	FMO-394 Set		
FOS Manual - Hydraulics	FOS-1003B		
FOS Manual - Electrical Systems	FOS-2005B		
FOS Manual - Engines	FOS-3005B		
FOS Manual - Power Trains	FOS-4005B		
FOUR FOS MANUALS (above)	FOS-90 Set		
FOS Manual - Shop Tools	FOS-5103B		
FOS Manual - Welding	FOS-5205B		
FOS Manual - Belts and Chains	FOS-5303B		
FOS Manual - Bearings and Seals	FOS-5403B		
FOS Manual - Tires and Tracks	FOS-5505B		
FOS Manual - Mowing and Spraying Equipment	FOS-5604B		
FOS Manual - Air Conditioning	FOS-5705B		
FOS Manual - Fuels, Lubricants and Coolants	FOS-5805B		
FOS Manual - Fiber Glass	FOS-5902B		
FOS Manual - Fasteners	FOS-6002B		
FOS Manual - Iden. of Parts Failures	FOS-6102B		
SET OF ELEVEN FOS MANUALS FOS-51B, 52B, 53B, 54B, 55B, 56B, 57B, 58B, 59B, 60B and 61B	FOS-71 Set		
SET OF ALL FIFTEEN FOS MANUALS	FOS-181 Set		
Conservation Farming	FC-10101B		
Machinery Maintenance	FMW-10101B		

Illinois State Residents add 6% for ROT .....

Check or money order in U.S. Dollars enclosed ..... Total
(Do not send cash or stamps)

For current prices of John Deere Service Literature, please call 1-800-522-7448

SP-319 Litho in U.S.A. NOV-84

PARTS CATALOG

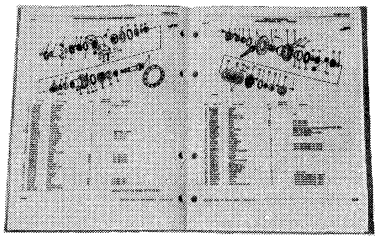

A parts catalog containing exploded view illustrations and lists of all parts is useful when purchasing service parts. Helps identify the correct parts. Useful in assembling and disassembling.

OPERATOR'S MANUAL

An extra copy of the operator's manual may be important if the copy furnished with your machine is misplaced.

TECHNICAL MANUAL

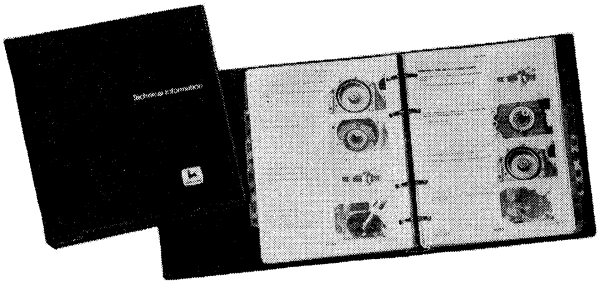

The technical manual is a service guide for your machine. Included in the manual are specifications, diagnosis and adjustments, illustrations of special assembly and disassembly procedures, hydraulic oil flows, and wiring diagrams.

FMO AND FOS MANUALS

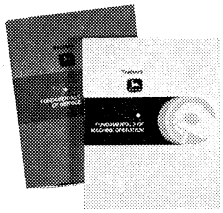

These are basic manuals covering most all types and makes of agricultural machinery. FMO manuals tell ycu how to *operate* machines; FOS manuals tell you how to *service* machines. Each manual starts with basic theory and is fully illustrated with colorful diagrams and photographs. Both the"whys" and "hows" of adjustments and repairs are covered in this reference library.