GreenStar™ Lightbar

OPERATOR'S MANUAL

GreenStar™ Lightbar

OMPFP14000 ISSUE F4 (ENGLISH)

CALIFORNIA

Proposition 65 Warning

Diesel engine exhaust and some of its constituents are known to the State of California to cause cancer, birth defects, and other reproductive harm.

If this product contains a gasoline engine:

⚠ WARNING

The engine exhaust from this product contains chemicals known to the State of California to cause cancer, birth defects or other reproductive harm.

The State of California requires the above two warnings.

Additional Proposition 65 Warnings can be found in this manual.

John Deere Ag Management Solutions

PRINTED IN U.S.A.

Introduction

Foreword

WELCOME TO GREENSTAR PRECISION FARMING SYSTEMS offered by John Deere. The GreenStar™ Lightbar is an easy-to-use guidance system.

READ THIS MANUAL carefully to learn how to operate and service your GreenStar™ Lightbar system correctly. Failure to do so could result in personal injury or equipment damage.

THIS MANUAL SHOULD BE CONSIDERED a permanent part of your John Deere GreenStar™ Lightbar system and should remain with the system when you sell it.

RIGHT-HAND AND LEFT-HAND sides are determined by facing in the direction the machine will travel when going forward.

WRITE PRODUCT IDENTIFICATION NUMBERS (P.I.N.) in the Identification Numbers section. Accurately record all the numbers to help in tracing the machine should it be stolen. Your dealer also needs these numbers when you order parts. File the identification numbers in a secure place off the machine.

WARRANTY is provided as part of John Deere's support program for customers who operate and maintain their equipment as described in this manual. The GreenStar™ Lightbar hardware warranty is explained on the warranty certificate which you should have received from your dealer.

This warranty provides you the assurance that John Deere will back its products where defects appear within the warranty period. In some circumstances, John Deere also provides field improvements, often without charge to the customer, even if the product is out of warranty. Should the GreenStar™ Lightbar system be abused, or modified to change its performance beyond the original factory specifications, the warranty will become void and field improvements may be denied.

IMPORTANT: This manual provides necessary information for appropriate operation of the GreenStar™ Lightbar system.

ENJOY your new GreenStar™ Lightbar system from John Deere.

GreenStar is a trademark of Deere & Company

OUCC002,0002982 -19-18JUN08-1/1

Contents

Page

Safety
Recognize Safety Information 05-1
Understand Signal Words.....05-1
Follow Safety Instructions.....05-1
Practice Safe Maintenance.....05-2
Use Steps and Handholds Correctly 05-2
Handle Electronic Components and
Brackets Safely 05-3
Operate Guidance Systems Safely 05-3
Use Seat Belt Properly 05-4

Installing Lightbar
Lightbar Guidance System 10-1
General Installation Instructions 10-1
Operating Lightbar Console Suction Cup 10-2
Lightbar System—Standalone Configuration 10-3
Lightbar System—Display Configuration.....10-4

Operating Lightbar
Lightbar System Description.....15-1
Operating Lightbar System.....15-3
Lightbar System Fuse Protection 15-6

Display Configuration in Companion Mode
Operate Lightbar System in Companion Mode ..20-1
Original GreenStar™ Display and
Lightbar Companion Mode.....20-1
GS2 1800 Display and Lightbar
Companion Mode.....20-1
GS2 2600 Display and Lightbar
Companion Mode.....20-3
GS3 2630 Display and Lightbar
Companion Mode.....20-3

Lightbar Specifications
Safety Note Regarding the Subsequent
Installation of Electrical and
Electronic Appliances and/or Components 25-1
EC Declaration of Conformity.....25-1
Identify Date Code.....25-2
Customs Union–EAC.....25-2

Serial Numbers
Identification Label.....30-1
Lightbar Console 30-1

Original Instructions. All information, illustrations and specifications in this manual are based on the latest information available at the time of publication. The right is reserved to make changes at any time without notice.

COPYRIGHT © 2014
DEERE & COMPANY
Moline, Illinois
All rights reserved.
A John Deere ILLUSTRUCTION ® Manual

Safety

Recognize Safety Information

This is a safety-alert symbol. When you see this symbol on your machine or in this manual, be alert to the potential for personal injury.

Follow recommended precautions and safe operating practices.

T81389 —UN—28JUN13

DX,ALERT -19-29SEP98-1/1

Understand Signal Words

A signal word—DANGER, WARNING, or CAUTION—is used with the safety-alert symbol. DANGER identifies the most serious hazards.

DANGER or WARNING safety signs are located near specific hazards. General precautions are listed on CAUTION safety signs. CAUTION also calls attention to safety messages in this manual.

TS187 —19—30SEP88

DX,SIGNAL -19-03MAR93-1/1

Follow Safety Instructions

Carefully read all safety messages in this manual and on your machine safety signs. Keep safety signs in good condition. Replace missing or damaged safety signs. Be sure new equipment components and repair parts include the current safety signs. Replacement safety signs are available from your John Deere dealer.

There can be additional safety information contained on parts and components sourced from suppliers that is not reproduced in this operator's manual.

Learn how to operate the machine and how to use controls properly. Do not let anyone operate without instruction.

Keep your machine in proper working condition. Unauthorized modifications to the machine may impair the function and/or safety and affect machine life.

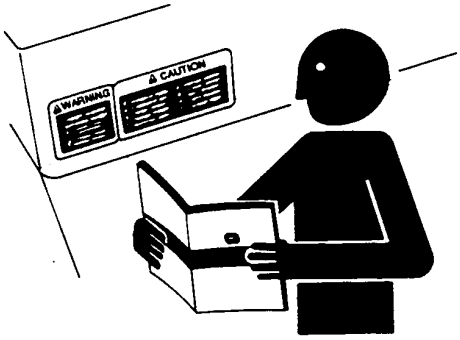

TS201 —UN—15APR13

If you do not understand any part of this manual and need assistance, contact your John Deere dealer.

DX,READ -19-16JUN09-1/1

Practice Safe Maintenance

Understand service procedure before doing work. Keep area clean and dry.

Never lubricate, service, or adjust machine while it is moving. Keep hands, feet , and clothing from power-driven parts. Disengage all power and operate controls to relieve pressure. Lower equipment to the ground. Stop the engine. Remove the key. Allow machine to cool.

Securely support any machine elements that must be raised for service work.

Keep all parts in good condition and properly installed. Fix damage immediately. Replace worn or broken parts. Remove any buildup of grease, oil, or debris.

On self-propelled equipment, disconnect battery ground cable (-) before making adjustments on electrical systems or welding on machine.

On towed implements, disconnect wiring harnesses from tractor before servicing electrical system components or welding on machine.

TS218 —UN—23AUG88

DX,SERV -19-17FEB99-1/1

Use Steps and Handholds Correctly

Prevent falls by facing the machine when getting on and off. Maintain 3-point contact with steps, handholds, and handrails.

Use extra care when mud, snow, or moisture present slippery conditions. Keep steps clean and free of grease or oil. Never jump when exiting machine. Never mount or dismount a moving machine.

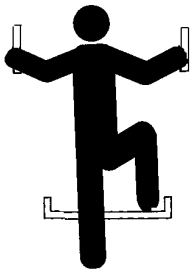

T133468 —UN—15APR13

DX,WW,MOUNT -19-12OCT11-1/1

Handle Electronic Components and Brackets Safely

Falling while installing or removing electronic components mounted on equipment can cause serious injury. Use a ladder or platform to easily reach each mounting location. Use sturdy and secure footholds and handholds. Do not install or remove components in wet or icy conditions.

If installing or servicing a RTK base station on a tower or other tall structure, use a certified climber.

If installing or servicing a global positioning receiver mast used on an implement, use proper lifting techniques and wear proper protective equipment. The mast is heavy and can be awkward to handle. Two people are required when mounting locations are not accessible from the ground or from a service platform.

TS249 —UN—23AUG88

DX,WW,RECEIVER -19-24AUG10-1/1

Operate Guidance Systems Safely

Do not use guidance systems on roadways. Always turn off (disable) guidance systems before entering a roadway. Do not attempt to turn on (activate) a guidance system while transporting on a roadway.

Guidance systems are intended to aid the operator in performing field operations more efficiently. The operator is always responsible for the machine path. Guidance systems do not automatically detect or prevent collisions with obstacles or other machines.

Guidance Systems include any application that automates machine steering. This includes, but may not be limited to, AutoTrac™, iGuide™, iTEC™ Pro, AutoTrac™ Universal (ATU), RowSense™, and Machine Sync.

To prevent injury to the operator and bystanders:
- Never get on or off a moving machine.
- Verify the machine, implement, and guidance system are set up correctly.
  - If using iTEC™ Pro, verify accurate boundaries have been defined.
  - If using Machine Sync, verify the follower's home point is calibrated with sufficient space between the machines.
- Remain alert and pay attention to the surrounding environment.
- Take control of the steering wheel, when necessary, to avoid field hazards, bystanders, equipment, or other obstacles.
- Stop operation if poor visibility conditions impair your ability to operate the machine or identify people or obstacles in the machine path.
- Consider field conditions, visibility, and machine configuration when selecting machine speed.

AutoTrac is a trademark of Deere & Company
iGuide is a trademark of Deere & Company
iTEC is a trademark of Deere & Company
RowSense is a trademark of Deere & Company

JS56696,0000ABC -19-02DEC13-1/1

Use Seat Belt Properly

Avoid crushing injury or death during rollover.

This machine is equipped with a rollover protective structure (ROPS). USE a seat belt when you operate with a ROPS.

- Hold the latch and pull the seat belt across the body.
- Insert the latch into the buckle. Listen for a click.
- Tug on the seat belt latch to make sure that the belt is securely fastened.
- Snug the seat belt across the hips.

Replace entire seat belt if mounting hardware, buckle, belt, or retractor show signs of damage.

Inspect seat belt and mounting hardware at least once a year. Look for signs of loose hardware or belt damage, such as cuts, fraying, extreme or unusual wear, discoloration, or abrasion. Replace only with replacement parts approved for your machine. See your John Deere dealer.

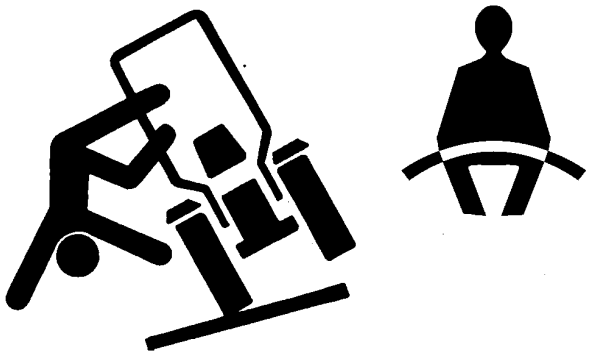

DX,ROPS1 -19-22AUG13-1/1

Lightbar Guidance System

ZX1044380 —UN—30JUN10

GreenStar™ Lightbar system shows your position in field relative to track that you determine with your first pass through field. Using LEDs on your Lightbar display, you know which way to steer in order to keep your path parallel with your last.

The Lightbar system can be used in a standalone configuration with just a StarFire receiver or can be used with a GreenStar™ display in conjunction with the GPS receiver (companion mode). Refer to Lightbar System—Standalone Configuration or Lightbar System—Display Configuration in this Section and to Section Display Configuration in Companion Mode.

NOTE: The Lightbar console tilt angle is adjustable.

OUCC002,0002DFD -19-30JUN10-1/1

General Installation Instructions

Follow these guidelines to correctly install and maintain the GreenStar™ Lighbar system:

- Install within reach of the operator.
- Do not cover up decals or indicators.
- Do not obstruct operator's view.
- Do not store in direct sunlight.
- Do not direct high-pressure jet on Lightbar.
- Do not use harsh chemicals (such as solvents or gasoline) or unauthorized rubber cleaners and conditioners to clean the cup. Contact your John Deere Dealer.

The GreenStar™ Lightbar suction cup is intended to be attached on the front windshield of tractor.

IMPORTANT: Mistreatment or misuse may damage a suction cup or otherwise create conditions which could cause the suction cup to fail, resulting in an unexpected release.

- Do not allow anything to interfere with free movement of the plunger while the cup is attached. This could prevent the red line from alerting the user of vacuum loss.
- Remove Lightbar and suction cup from windshield when not in use.
- Keep suction cup clean.
- Re-attach suction cup every 24 hours.

NOTE: Read also instructions and cautions contained in the suction cup instruction manual.

OUCC002,0002DFE -19-30JUN10-1/1

Operating Lightbar Console Suction Cup

IMPORTANT: Use the cup at temperatures from -18 to 49 °C (0 to 120 °F). Moisture or contaminants can reduce the slip resistance of the cup. The red line indicator (A) may not perform reliably at elevations above 1500 m (5000 ft.).

Read also instructions and cautions contained in the suction cup instruction manual.

The manual pump removes air from between the rubber pad and the windshield contact surface. A red line (A) on the pump plunger (B) serves as a vacuum indicator.

The two release pads (C) allow the cup to disengage completely.

NOTE: A check valve allows the operator to re-pump the cup without removing it from the contact surface.

1. **To Attach:**

   Clean the windshield contact surface and, if necessary, the inner face of the suction cup.

2. Position the cup so the red line (A) is visible in case it should appear (loss of vacuum) while the cup is attached.

3. Pump the plunger (B) until the cup attaches completely. Stop pumping as soon as the red line (A) is hidden.

4. Check the plunger (B) frequently to make sure the cup remains securely attached. If the red line (A) appears, pump the plunger (B) until the red line (A) is hidden again.

ZX1044377 —UN—30JUN10

A—Red line
B—Pump plunger
C—Release pad

NOTE: Re-attach suction cup every 24 hours.

1. **To Release:**

   Hold the Lightbar console with one hand.

2. Pull one of the release tabs (C) until the cup disengages completely.

OUCC002,0002DFF -19-30JUN10-1/1

Lightbar System—Standalone Configuration

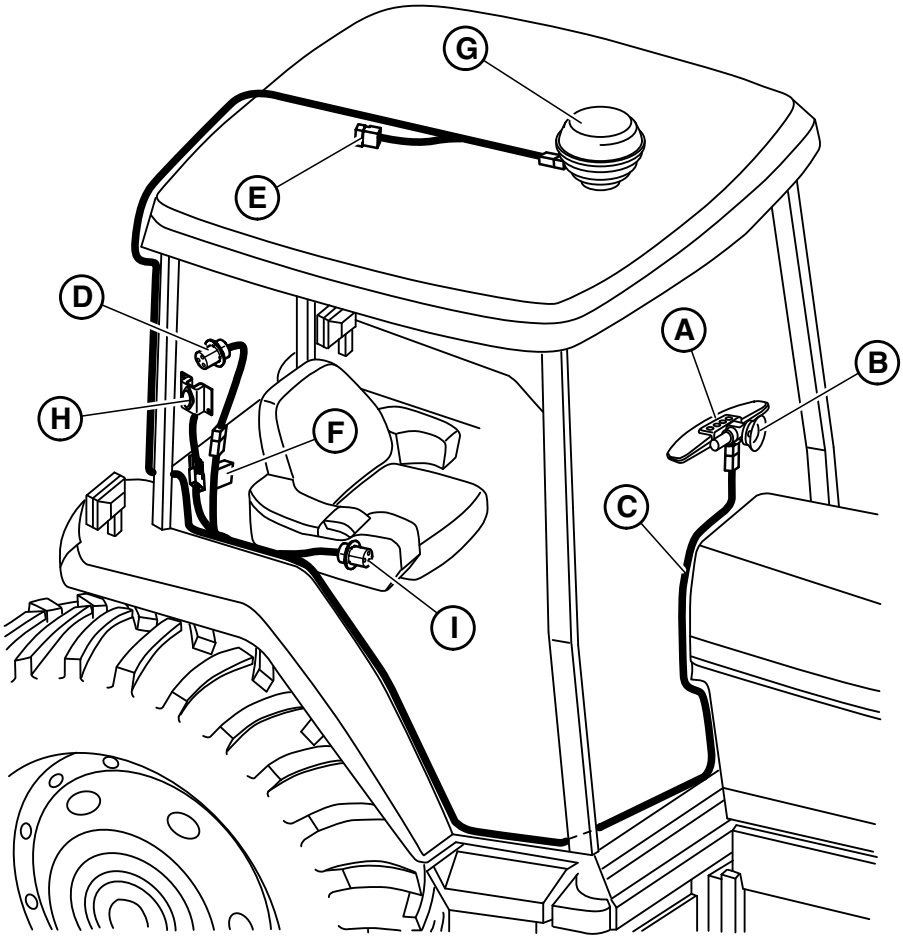

ZX1044378

ZX1044378 —UN—30JUN10

Standalone Harness Routing

A—Lightbar
B—Suction cup
C—Power supply harness
D—Power adapter harness (if required)
E—CAN Bus active terminator
F—Fuse—10A
G—StarFire receiver
H—Suppression diode
I— SERVICE ADVISOR™ diagnostic adapter/connector

NOTE: Connect power adapter harness (D) to convenience outlet power connector.

Use tie straps to fix the harness (C) routing.

OUCC002,0002E00 -19-30JUN10-1/1

Lightbar System—Display Configuration

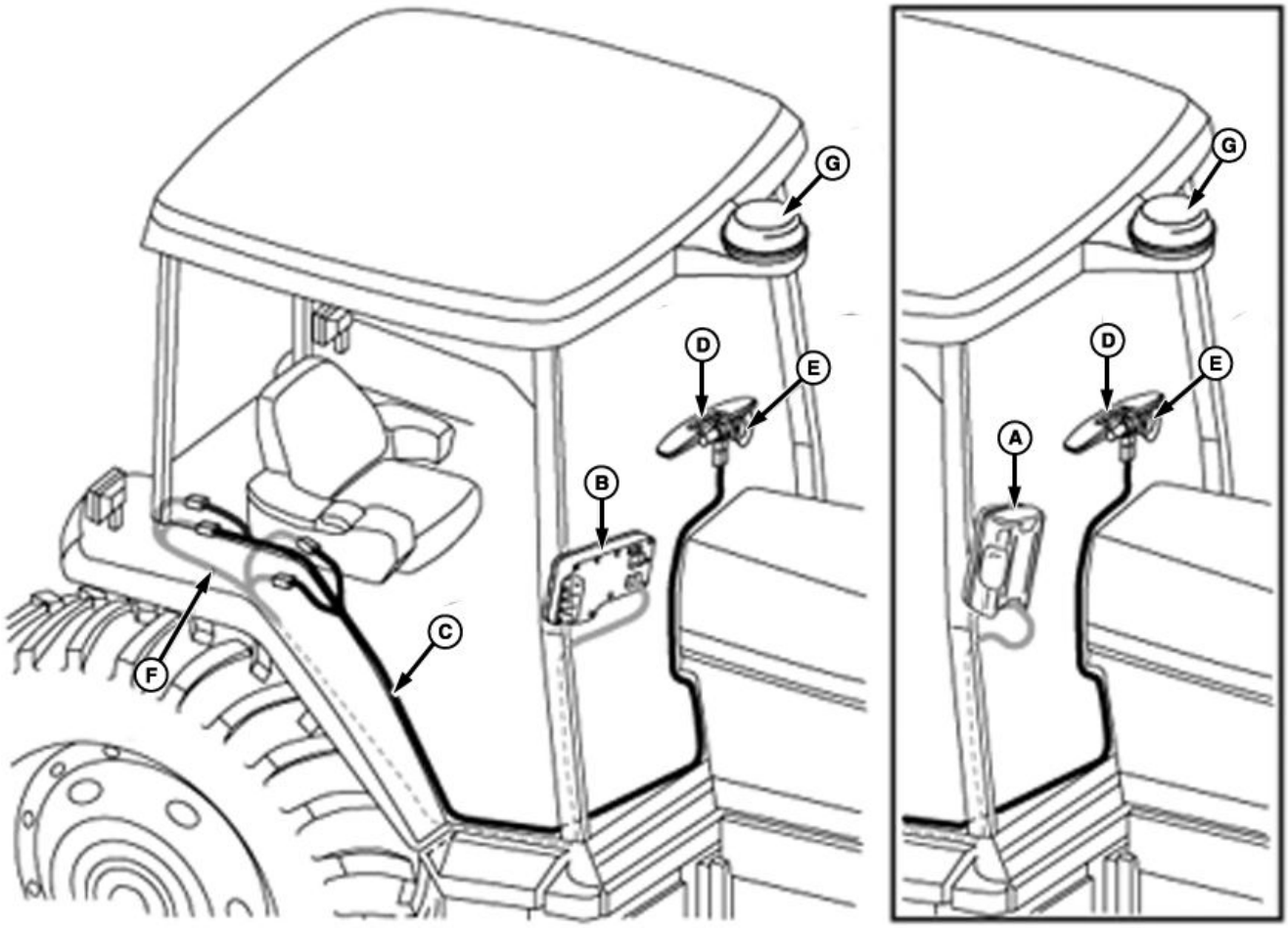

A—Original GreenStar™ Display
B—GreenStar™ 2 1800 Display
C—Right-hand Console Harness
D—Lightbar
E—Suction Cup
F—GreenStar™ Ready Harness 2- and 4- pin Connectors
G—StarFire™ Receiver

NOTE: Original GreenStar™ (A), GS2 1800 (B), GS2 2600, and GS3 2630 Displays are optional. With right-hand console harness (C), Lightbar system can be used in standalone or companion mode (See Display Configuration in Companion Mode section).

See your dealer for adapter harnesses required to install on some self-propelled sprayers.

GreenStar is a trademark of Deere & Company

Continued on next page

HC94949,0000503 -19-09JUN14-1/2

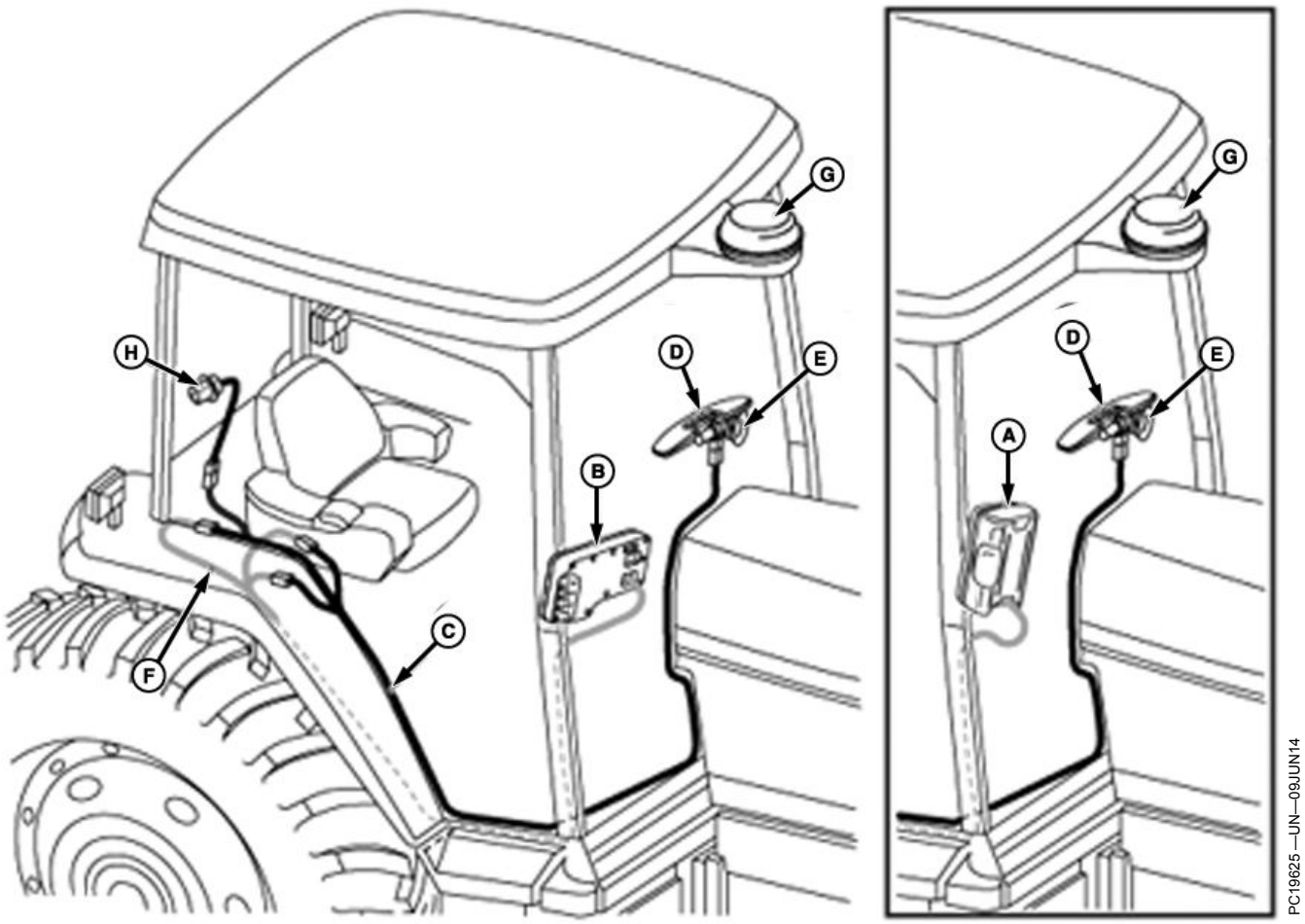

A—Original GreenStar™ Display
B—GS2 1800 Display
C—Right-hand Console Harness
D—Lightbar
E—Suction Cup
F—GreenStar™ Ready Harness 2- and 4- pin Connectors
G—StarFire™ Receiver
H—Power Adapter Harness

HC94949,0000503 -19-09JUN14-2/2

Lightbar System Description

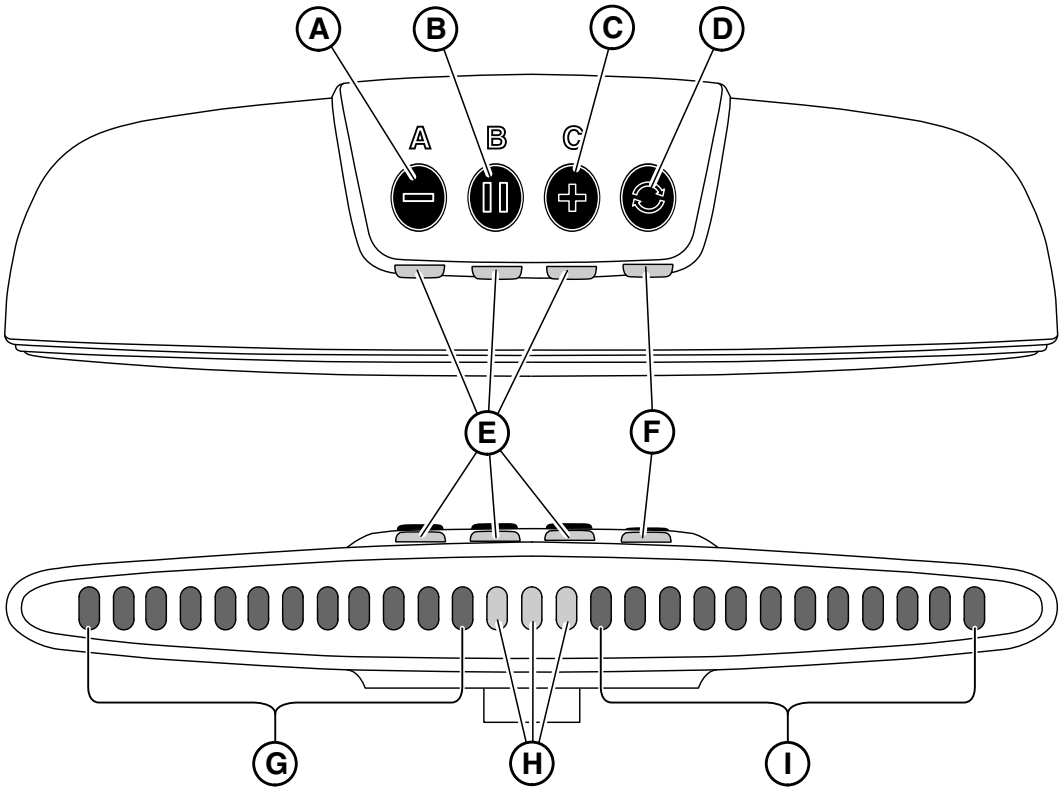

ZX1041592 —UN—16APR08

A—Set point A/Decrease LED Brightness/Decrease Spacing Button
B—Set point B/Center Track Button
C—Set point C/Increase LED Brightness/Increase Spacing Button
D—Mode Button
E—Operator Input Indicator LED
F—GPS Signal Quality Indicator LED
G—L.h. Offset Tracking/Decrease Tracking Indicator LEDs (Red)
H—Center Tracking Indicator LEDs (Green)
I— R.h.Offset Tracking/Increase Tracking Indicator LEDs (Red)

NOTE: The Lightbar performs a 5 seconds LED test with all LEDs illuminated upon power up.

The Lightbar system is designed to be connected to the vehicle CAN Bus or to be operated as a standalone system and can be used with or without a GreenStar™ display in conjunction with the StarFire GPS receiver (see Lightbar System—Standalone Configuration or Lightbar System—Display Configuration in this Section).

NOTE: Whenever a display is detected on the CAN bus, the Lightbar system will be placed into companion mode. In this mode, the Lightbar buttons are disabled and all guidance setup is performed in the GreenStar™ display. Refer to relevant Display Operator's Manual.

The Lightbar system turns on with the vehicle key switch.

CAUTION: The Lightbar system MUST be turned OFF during road transport. Press and hold Mode Button (D) for 2 seconds to turn off the Lightbar.

As a standalone system, the Lightbar can be operated in three different modes by pressing Mode button (D). Depending on the mode selected, the buttons (A), (B) and (C) will have different functionality (see Operating Lightbar System in this Section):

1. **Run Mode:** Allows the operator to adjust LED brightness by using buttons (A) or (C) or do a center track by using button (B).
2. **Setup Mode:** Allows the operator to setup tracking by using buttons (A), (B) and (C).
3. **Adjust Mode:** Allows the operator to adjust track spacing by using buttons (A) or (C).

Continued on next page

OUCC002,0002E03 -19-29JUN10-1/2

IMPORTANT: The Lightbar system checks the GPS signal quality. Either WAAS, EGNOS, SF1, or SF2 is required for Lightbar system to function. Without the required differential quality, no navigation LEDs will be displayed on the lightbar.

A Starfire Configurator Software is available from Stellar Support (http://stellarsupport.deere.com) for activating and setting up SF1 and SF2 signals from a laptop. An additional harness is required—Contact your John Deere dealer.

The LED (F) beneath the mode button (D) indicates the GPS signal quality in the following manner:

Green = Good quality—High accuracy.

Amber = Low accuracy.

Amber flashing = Signal available but not sufficient to drive parallel tracking.

Red = no GPS signal available.

Red flashing = no GPS receiver detected.

IMPORTANT: The Lightbar system can still be used when LED (F) glows amber, but accuracy will be lower (reduced GPS signal quality).

IMPORTANT: The tracking LED navigation is possible when steering in forward direction to the desired path only. The Lightbar system does not support the vehicle reverse operation.

At first time boot-up, the factory settings are:

- Track Spacing = 5 m (16 ft 4.8 in.)

OUCC002,0002E03 -19-29JUN10-2/2

Operating Lightbar System

The Lightbar system can be operated under three operating modes.

The **Run Mode** (I) is automatically activated (normal operation) if a valid setup has been performed (Refer to ”Operating Lightbar Under Run Mode”).

NOTE: If a valid setup has not been performed the Lightbar automatically starts under Setup mode.

Press the button (D) to select the **Setup Mode** (II)—The LED beneath the **A** button is activated to confirm selection of Setup Mode (Refer to ”Operating Lightbar Under Setup Mode”).

Press the button (D) to select the **Adjust Mode** (III)—The LEDs beneath the **A** and **C** buttons are activated to confirm selection of Adjust Mode (Refer to ”Operating Lightbar Under Adjust Mode”).

I— Run Operating Mode
II— Setup Operating Mode
III— Adjust Operating Mode
D—Operating Mode Selection Button

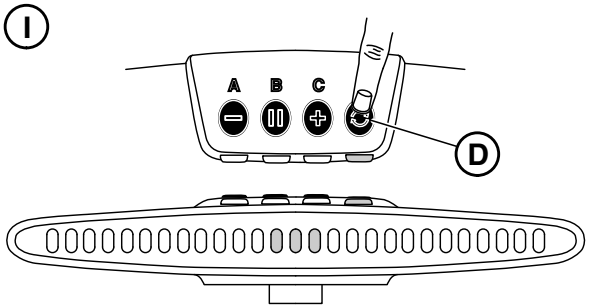

ZX1041593

Run Operating Mode

ZX1041593 —UN—16APR08

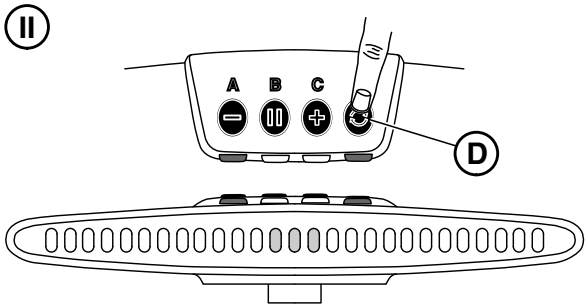

ZX1041601

Setup Operating Mode

ZX1041601 —UN—16APR08

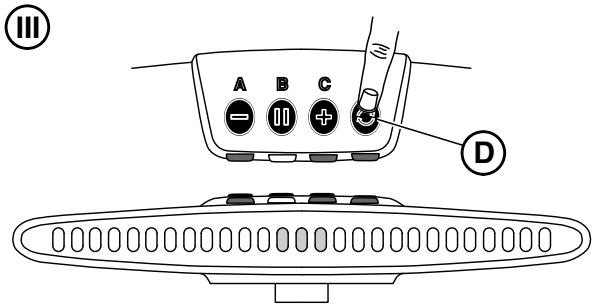

ZX1041602

Adjust Operating Mode

ZX1041602 —UN—16APR08

Continued on next page

OUCC002,00029B1 -19-07JUL08-1/5

Operating Lightbar Under Run Mode

The Run Mode is automatically activated under normal operation if a valid setup has been performed. To be sure that run mode is activated check that no LEDs beneath the **A**, **B** or **C** buttons are activated. If necessary, press button (D) until LEDs beneath buttons **A**, **B** or **C** are all off to access the run mode. Select this operating mode to:

- Increase/decrease the LED brightness by pressing the button (A) or (C).
- Do a center track by pressing the button (B).
  - The system activates the center tracking indicator LEDs (F). When driving on track only these LEDs are activated.
  - If a track offset to the right-hand side is detected the system activates the L.h.offset tracking indicator LEDs (E) proportionally to the offset detected (about 10 cm (3.93 in.) per LED (E) activated). This LED activation informs the operator that he must steer to the left-hand side until all L.h.offset tracking indicator LEDs (E) are off.
  - If a track offset to the left-hand side is detected the system activates the R.h.offset tracking indicator LEDs (G) proportionally to the offset detected (about 10 cm (3.93 in.) per LED (G) activated). This LED activation informs the operator that he must steer to the right-hand side until all R.h.offset tracking indicator LEDs (G) are off.

Track Finder Functionality:

To help the operator in finding the track spacing while turning in headland, the system changes to flashing LEDs (E) or (G) everytime the gauge limit of the lightbar is reached. The flashing frequency indicates the distance from the track:

- A higher frequency means closer to the track.
- A lower frequency means further away from track.

NOTE: Flashing of LEDs starts at a distance from track of 1,3 m (4 ft 3.12 in.) at 10 Hz and changes to 1 Hz at track spacing/2.

A—Decrease LED Brightness Button
B—Center Track Button
C—Increase LED Brightness Button
D—Operating Mode Selection Button
E—L.h. Offset Tracking Indicator LEDs (Red)
F—Center Tracking Indicator LEDs (Green)
G—R.h.Offset Tracking Indicator LEDs (Red)

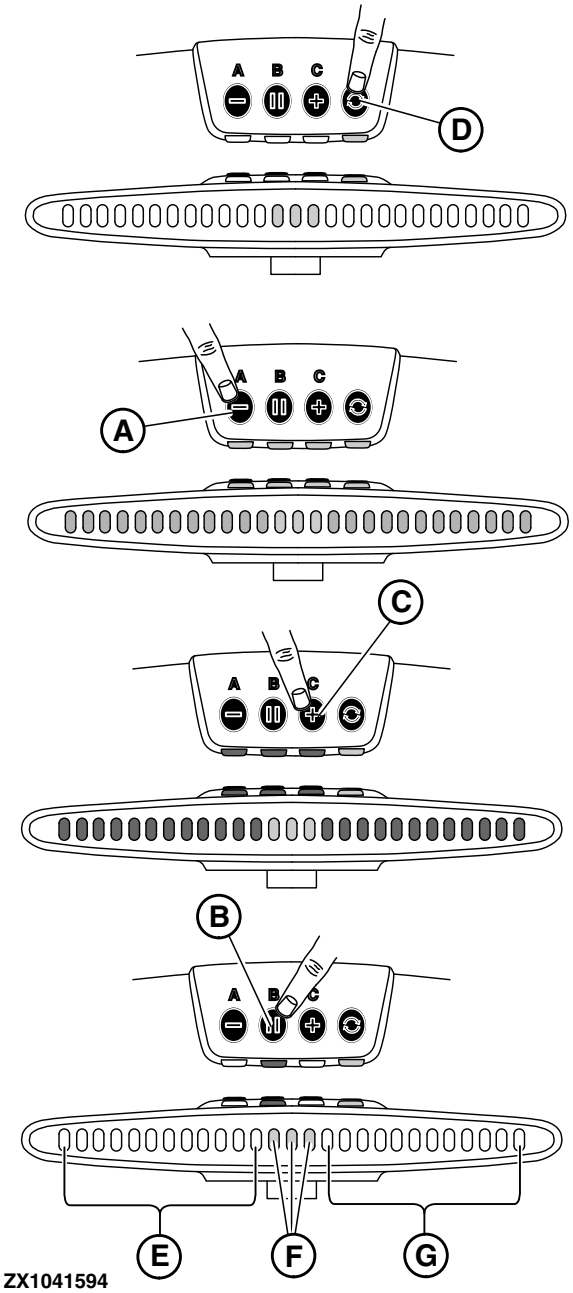

Operating Lightbar—Run Mode

Continued on next page

OUCC002,00029B1 -19-07JUL08-2/5

Operating Lightbar Under Setup Mode

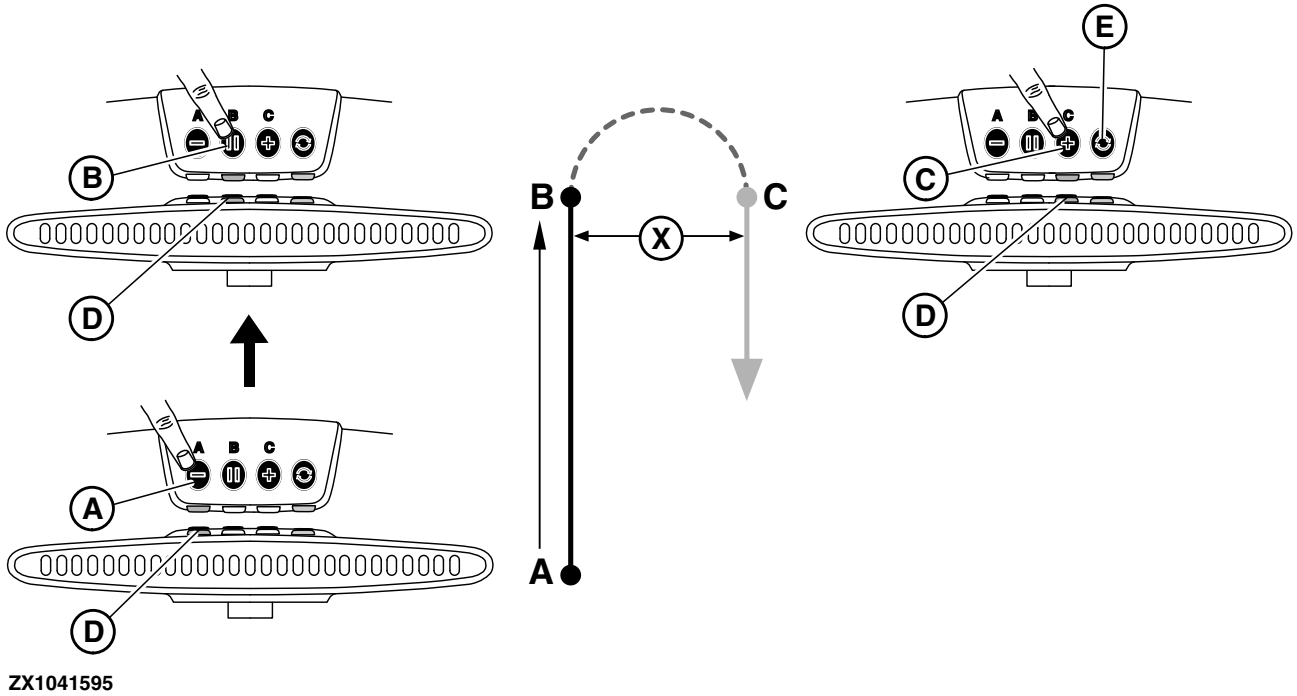

Operating Lightbar—Setup Mode

A—Set point A Button
B—Set point B Button
C—Set point C Button
D—Operator Input Indicator LED
E—Operating Mode Selection Button
X—Track Spacing

After power up, press button (E) to access setup mode. The LED beneath the **A** button is activated to confirm selection of the Setup Mode. Select this operating mode to:

- **Set a track as initial setup**. The operator needs to define points A, B and C (see illustration). Points A and B are used to calculate the heading and point C is used to calculate the track spacing, which is the distance (X) between the parallel tracks. Setup initial track as follows:

  a. The system turns on the operator input indicator LED beneath the button (A) and waits for the operator input to set **A** point. Press button (A) to start heading calculation.

  NOTE: Current position of point A is stored.

  b. The system turns on the operator input indicator LED (flashing) beneath the button (B). The system checks that the operator has driven at least 3 m (9 ft 10 in.) then operator input LED becomes solid. The system waits for the operator input to set **B** point. Press button (B) when point **B** is reached.

  NOTE: New A-B line is calculated and stored.

  c. The system turns on the operator input indicator LED (flashing) beneath the button (C). The system checks that the vehicle heading is greater than 90 degrees from A-B line then operator input LED becomes solid. The system waits for the operator input to set **C** point. Press button (C) for less than 2 seconds when point **C** is reached.

  NOTE: Vehicle position C and track spacing (X) are calculated and stored. System switches to Run Mode.

  NOTE: Pressing button (C) longer than 2 seconds will recall the latest stored track spacing (X). System switches to Run Mode.

- **Recall a track spacing previously set**. Whenever the operator needs to keep his track spacing a new A-B line can be setup and current track spacing (X) recalled by pressing button (C) longer than 2 seconds (see explanation above for initial track setup).

NOTE: During initial track setup procedure, all tracking indicator LEDs are off.

Continued on next page

OUCC002,00029B1 -19-07JUL08-3/5

Once the track spacing (X) has been setup: Press button (E) twice to select adjust mode and fine tune track spacing (X), if necessary. See ”Operating Lightbar Under Adjust Mode”.

OUCC002,00029B1 -19-07JUL08-4/5

Operating Lightbar Under Adjust Mode

After power up, press button (B) twice to access adjust mode. The LEDs beneath the **A** and **C** buttons are activated to confirm selection of adjust mode. Select this operating mode to fine tune the track spacing:

- The system turns on the operator input indicator LED beneath the buttons (A) and (C) as shown opposite.
- Press button (A) to decrease track spacing. Each tracking indicator LED (D) activation represents 10 cm (3.93 in.) of track spacing decrement.
- Press button (C) to increase track spacing. Each tracking indicator LED (E) activation represents 10 cm (3.93 in.) of track spacing increment.

A—Decrease Spacing Button
B—Operating Mode Selection Button
C—Increase Spacing Button
D—Decrease Tracking Indicator LEDs (Red)
E—Increase Tracking Indicator LEDs (Red)

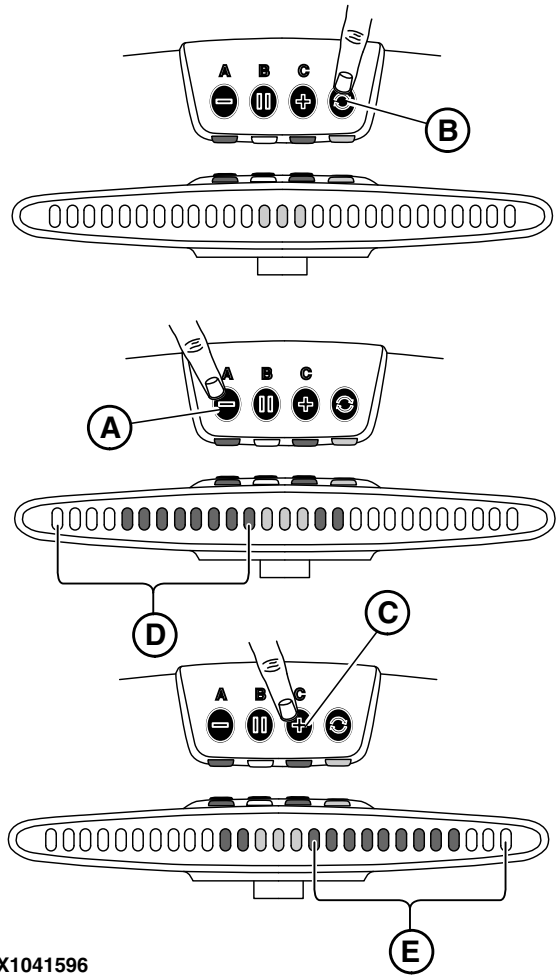

ZX1041596 —UN—05MAY08

Operating Lightbar—Adjust Mode

OUCC002,00029B1 -19-07JUL08-5/5

Lightbar System Fuse Protection

- **Standalone Configuration:** A 10A fuse (A) located on power supply harness protects the Lightbar system.
- **Display Configuration:** The tractor electrical system protects the Lightbar system. To identify which fuse protects the Lightbar system, refer to the tractor Operator's Manual.

A—Fuse-10 A

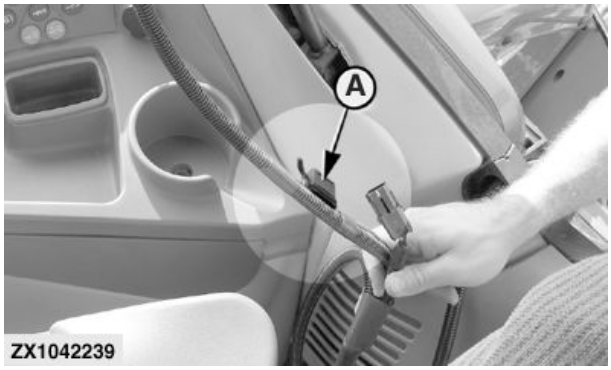

ZX1042239 —UN—18JUN08

OUCC002,00029A8 -19-24JUN08-1/1

Display Configuration in Companion Mode

Operate Lightbar System in Companion Mode

GreenStar™ Lightbar may be used in companion mode with a GreenStar™ Display (Original GreenStar™, GS2 1800, GS2 2600, or GS3 2630). When Lightbar and display are connected to machine CAN Bus, display automatically recognizes Lightbar, and Lightbar system is placed into companion mode. Lightbar buttons and Mode LEDs are disabled, and all guidance setup is performed in the display. (Refer to display Operator's Manual for setup information.)

GreenStar is a trademark of Deere & Company
StarFire is a trademark of Deere & Company

Benefits of companion mode are:

- Exact implement width and track spacing can be entered.
- Offset implements can be utilized.
- StarFire™ Receiver GPS diagnostics.
- Coverage mapping (GS2 and GS3 Displays only).

NOTE: Update display with latest software.

HC94949,0000504 -19-09JUN14-1/1

Original GreenStar™ Display and Lightbar Companion Mode

In companion configuration with an Original GreenStar™ Display, there is no setup page specifically for the GreenStar™ Lightbar.

Guidance track setup is performed on display. Lightbar tracking LEDs light up in increments of 10 cm (4 in.).

GreenStar is a trademark of Deere & Company

These increments do not match distance at which Tracking Tones are activated.

Brightness of Lightbar LEDs is synchronized with brightness setting of display.

HC94949,000050B -19-09JUN14-1/1

GS2 1800 Display and Lightbar Companion Mode

Select Menu > GreenStar™ Main > Settings > Guidance Settings > Lightbar Settings

Step Size (A) – Sets value of off-track distance of each box on Path Accuracy Indicator. If display is used with GreenStar™ Lightbar, Step Size also sets the value of off-track distance that each light represents on Lightbar.

Steer Towards Direction (B) – If option is selected and lights illuminate to the left on Path Accuracy Indicator, steer machine to left to align with guidance track.

Off-Track Direction (C) – If option is selected and lights illuminate to the left on Path Accuracy Indicator, steer machine to right to align with guidance track.

A—Step Size
B—Steer Towards Direction
C—Off-Track Direction

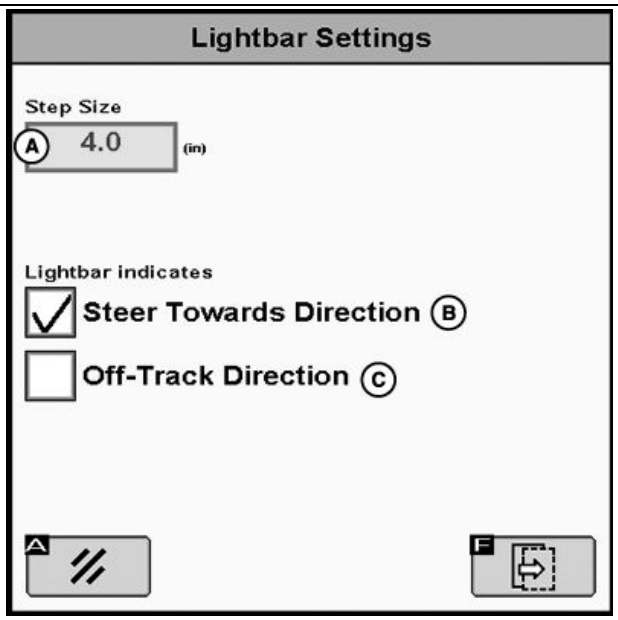

PC19690 —UN—03JUN14

GreenStar is a trademark of Deere & Company

Continued on next page

HC94949,000050C -19-09JUN14-1/3

External Lightbar On (A) – Check box to turn ON Lightbar.

Adjust Brightness of Lightbar – Use setting to adjust Lightbar brightness relative to brightness of display. Brightness of external Lightbar synchronizes with brightness setting of display. (To adjust setting, see GS2 1800 Display Operator's Manual.)

A—External Lightbar On

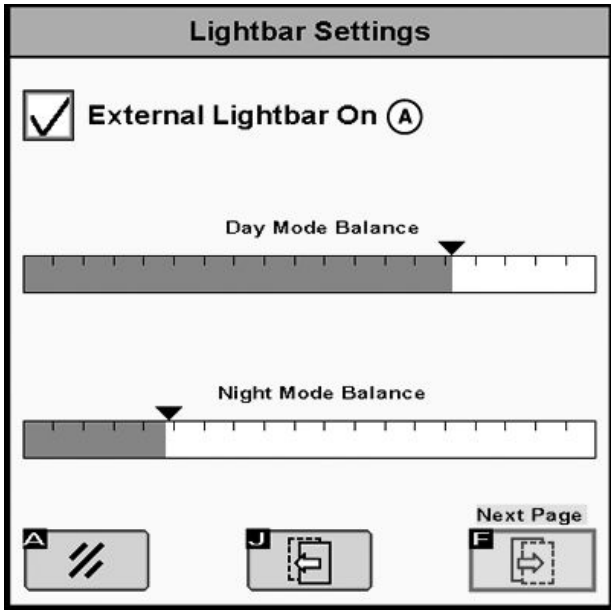

PC19691 —UN—03JUN14

HC94949,000050C -19-09JUN14-2/3

Configure Mounting Direction of Lightbar – This setting allows Lightbar console to be mounted upside down. When page is open, half of the lights on Lightbar light up. Check box (A) for direction that lights appear.

A—Direction Checkbox

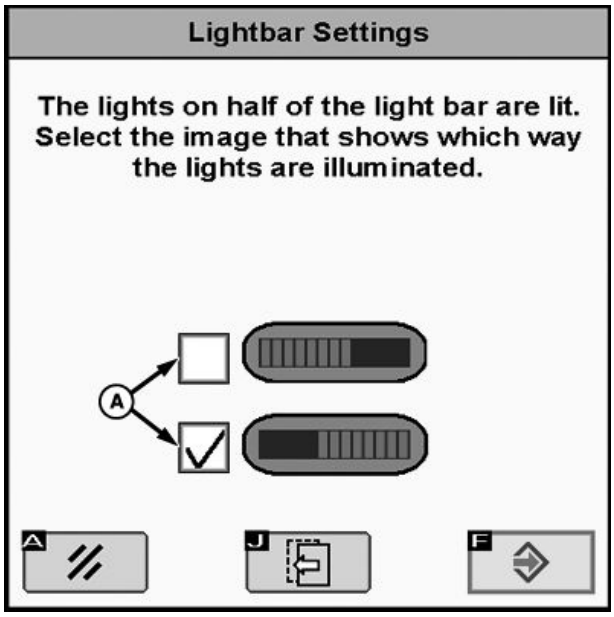

PC19692 —UN—09JUN14

HC94949,000050C -19-09JUN14-3/3

GS2 2600 Display and Lightbar Companion Mode

In companion mode with a GreenStar™ 2 2600 Display, there is no setup page specifically for the GreenStar™ Lightbar.

The step size is set in General Guidance Settings.

Select Menu > GreenStar™ 2 Pro > Guidance > Guidance Settings > General Settings > Next

Step Size (A) – Sets value of off-track distance of each box on Path Accuracy Indicator. If display is used with an external Lightbar, Step Size also sets the value of off-track distance that each light represents on Lightbar.

Brightness of Lightbar LEDs is synchronized with brightness setting of display.

A—Step Size

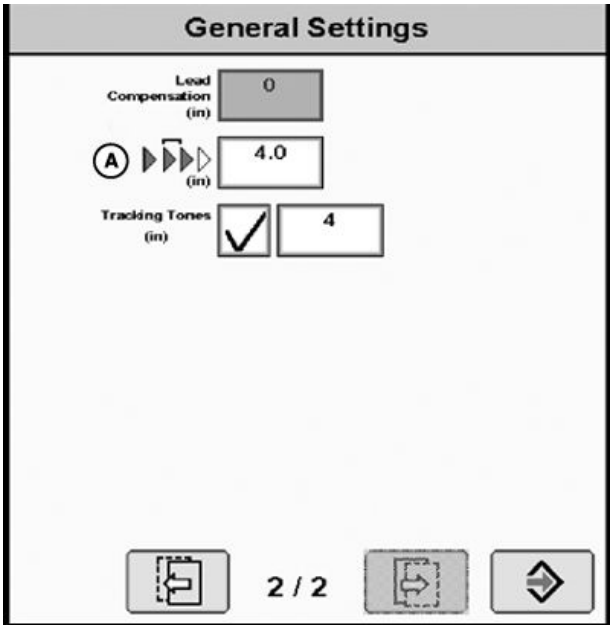

PC19693 —UN—03JUN14

GreenStar is a trademark of Deere & Company

HC94949,000050D -19-09JUN14-1/1

GS3 2630 Display and Lightbar Companion Mode

Select Menu > GS3 > Guidance > Guidance Settings > Lightbar Settings Change button

Step Size (A) – Sets value of off-track distance of each box on Path Accuracy Indicator. If display is used with an external GreenStar™ Lightbar, Step Size also sets value of off-track distance that each light represents on Lightbar.

Steer Towards Direction (B) – If option is selected and lights illuminate to the left on Path Accuracy Indicator, steer machine to left to align with guidance track.

Off-Track Direction (C) – If option is selected and lights illuminate to the left on Path Accuracy Indicator, steer machine to right to align with guidance track.

A—Step Size
B—Steer Towards Direction
C—Off-Track Direction

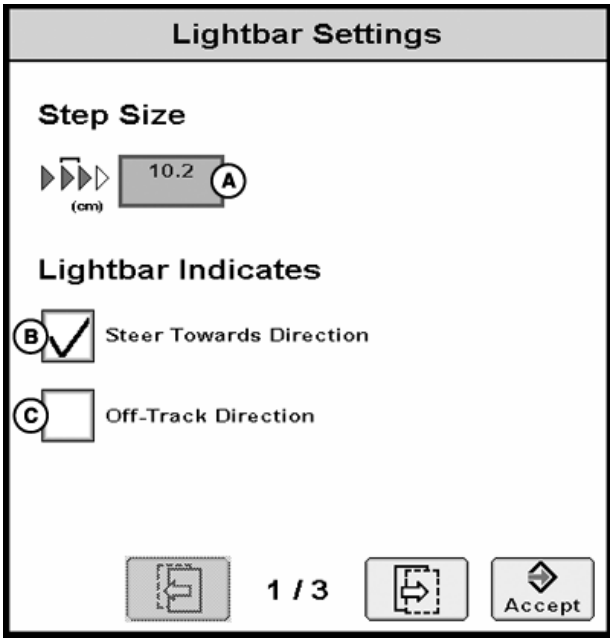

PC19613 —UN—13MAY14

GreenStar is a trademark of Deere & Company

Continued on next page

HC94949,000050E -19-09JUN14-1/3

External Lightbar On (A) – Check box to turn ON Lightbar.

Adjust Brightness of Lightbar – Use setting to adjust Lightbar brightness relative to brightness of display. Brightness of external Lightbar synchronizes with brightness setting of display. (To adjust setting, see GS3 2630 Display Operator's Manual.)

A—External Lightbar On Checkbox

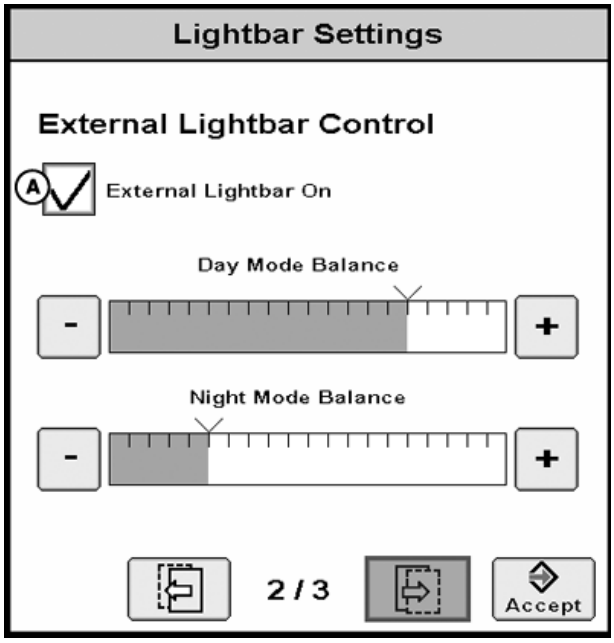

PC19614 —UN—27MAY14

HC94949,000050E -19-09JUN14-2/3

Configure Mounting Direction of Lightbar – This setting allows Lightbar console to be mounted upside down. When page is open, half of the lights on Lightbar light up. Check box (A) for direction that lights appear.

A—Direction Checkbox

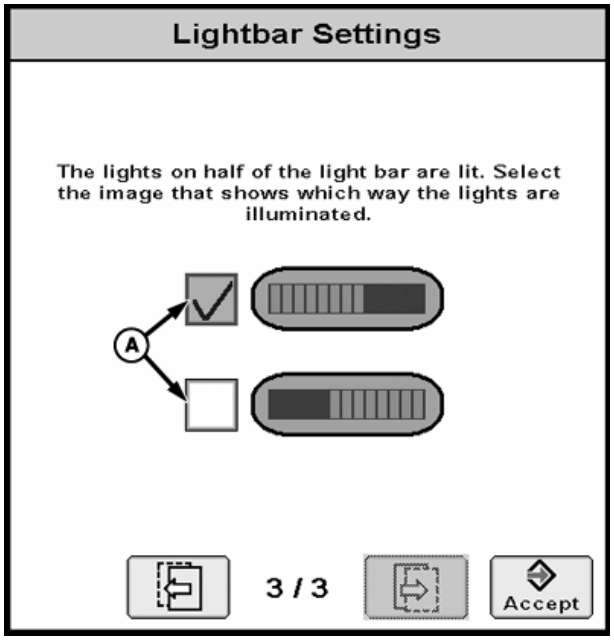

PC19615 —UN—09JUN14

HC94949,000050E -19-09JUN14-3/3

Lightbar Specifications

Safety Note Regarding the Subsequent Installation of Electrical and Electronic Appliances and/or Components

The machine is equipped with electronic components whose function may be influenced by electromagnetic radiation from other appliances. Such influences may be hazardous, so take the following safety instructions into account:

If electrical and electronic appliances are subsequently installed on the machine and connected to the onboard system, the user must verify whether the installation affects the electronics or other components. This applies particularly to:

- Personal Computer
- GPS (Global Positioning System) receiver

In particular, subsequently installed electrical/electron- ic components must comply with the relevant edition of EMC Directive 89/336/EEC, and be CE marked.

Wiring, installation and maximum permissible current supply must be as stated in the installation instructions of the machine manufacturer.

ZX,OMSPFH,EMV -19-02DEC96-1/1

EC Declaration of Conformity

Deere & Company
Moline, Illinois U.S.A.

The person named below declares that

Product: John Deere GreenStar™ Lightbar

fulfills all relevant provisions and essential requirements of the following directives:

Directive	Number	Certification Method
Electromagnetic Compatibility Directive	2004/108/EC	Annex II of the Directive

Name and address of the person in the European Community authorized to compile the technical construction file:

Brigitte Birk
John Deere GmbH & Co. KG
Mannheim Regional Center (Zentralfunktionen)
John Deere Strasse 70
Mannheim, Germany D-68163
EUConformity@johndeere.com

Place of declaration: Urbandale, Iowa

Date of declaration: 27 March 2013

Manufacturing unit: John Deere Intelligent Solutions Group

Name: Tilo Kempf

Title: Machine Control Development Manager

DXCE01 —UN—28APR09

CE

HC94949,0000490 -19-04JUN14-1/1

Identify Date Code

Use the date code (A) on the product label to identify the date of manufacture. “YY" (B) identifies the last two numbers of the year of manufacture; “WW” (C) identifies the week number of calendar year of manufacture.

NOTE: The week number of manufacture ranges between 01-53.

Date Code		
YY	Last Two Numbers of Year of Manufacture	Example: **11** = 20**11** **12** = 20**12** **13** = 20**13**
WW	Week Number of Calendar Year of Manufacture	Example: 01, 02, 03...53

A—Date Code (Date of Manufacture)
B—Last Two Numbers of Year of Manufacture
C—Week Number of Calendar Year of Manufacture

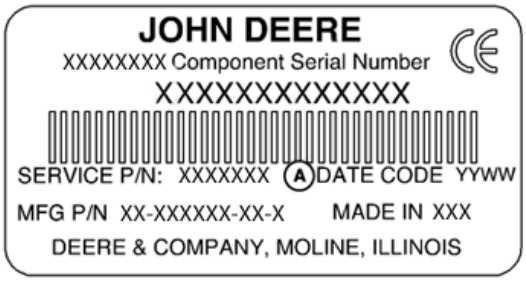

PC17568 —UN—16AUG13

Product Label Example

PC17574 —UN—16AUG13

Date Code Example

HC94949,0000342 -19-23AUG13-1/1

Customs Union–EAC

Information for products that bear conformity mark of the Customs Union member states

Manufacturer: Deere & Company
Moline, Illinois U.S.A.

Model: John Deere GreenStar™ Lightbar

Made in U.S.A.

Name and address of the authorized representative in the Customs Union of Russia, Belarus and Kazakhstan:
Limited Liability Company
"John Deere Rus”

Address:
142050, Russia, Moscow region, Domodedovo district, Domodedovo, Beliye Stolbi micro district, vladenye "Warehouse 104," Building 2.

For technical support, contact your dealer.

PC17575 —UN—16AUG13

HC94949,0000492 -19-02JUN14-1/1

Serial Numbers

Identification Label

The letters and numbers on the label identify a component or assembly. All of these characters are needed when ordering parts or identifying the system or component for any John Deere product support program. Also, they are needed for law enforcement to trace your Lightbar system if it is ever stolen.

For these reaseons, accurately record these characters.

OUCC002,00029A6 -19-18JUN08-1/1

Lightbar Console

Label is located underneath console.

ZX1042240 —UN— 15JUL08

OUCC002,00029A7 -19-18JUN08-1/1

Index

Page

C

Companion mode
  Display configuration 20-1
Companion Mode
  GS2 1800 Display 20-1
  GS2 2600 Display 20-3
  GS3 2630 Display 20-3
  Original GreenStar Display 20-1

F

Fuse protection 15-6

G

Guidance system
  Display Configuration 10-4
  Lightbar 10-1
  Standalone configuration 10-3

I

Identification label 30-1
Installation instructions 10-1
Installing Lightbar
  Display Configuration 10-4
  General instructions 10-1
  Guidance system 10-1
  Standalone configuration 10-3
  Suction cup 10-2

L

LEDs Description 15-1

O

Operating Lightbar
  Adjust mode 15-3
  Adjust track spacing 15-3
  Companion mode 20-1, 20-3
  Display configuration in companion mode 20-1
  Fuse protection 15-6
  Recall a track spacing 15-3
  Run mode 15-3
  Set a track 15-3
  Setup mode 15-3
  Suction cup 10-2

S

Safety, Steps and Handholds
  Use Steps and Handholds Correctly 05-2
Serial numbers
  Console 30-1
  Identification label 30-1
Suction cup 10-2

Page

System Description 15-1

John Deere Service Keeps You On The Job

John Deere Parts

We help minimize downtime by putting genuine John Deere parts in your hands in a hurry.

That's why we maintain a large and varied inventory—to stay a jump ahead of your needs.

TS100 —UN—23AUG88

DX,IBC,A -19-04JUN90-1/1

The Right Tools

Precision tools and testing equipment enable our Service Department to locate and correct troubles quickly . . . to save you time and money.

TS101 —UN—23AUG88

DX,IBC,B -19-04JUN90-1/1

Well-Trained Technicians

School is never out for John Deere service technicians.

Training schools are held regularly to be sure our personnel know your equipment and how to maintain it.

Result?

Experience you can count on!

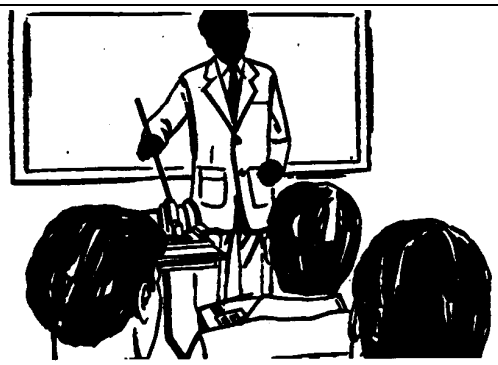

TS102 —UN—23AUG88

DX,IBC,C -19-04JUN90-1/1

Prompt Service

Our goal is to provide prompt, efficient care when you want it and where you want it.

We can make repairs at your place or at ours, depending on the circumstances: see us, depend on us.

JOHN DEERE SERVICE SUPERIORITY: We'll be around when you need us.

TS103 —UN—23AUG88

DX,IBC,D -19-04JUN90-1/1