A GUIDE FOR YOUR RIDE.

IMPORTANT:
Read carefully and retain for future reference.

JETSON

WARREN

All-Terrain Electric Bike.

MODEL SKU(S): JJWRNFT-GRY

OUR TOP TWO RIDING RULES:

BE SAFE.
HAVE FUN!



MANUFACTURED IN DONGGUAN, CHINA
IMPORTED BY TRURIDE TECH LLC.
PO BOX 461, JERSEY CITY, NJ 07302-9998

DATE CODE: 08/2025
DOCUMENT EDITION: V3.0
MADE IN CHINA

© 2025, TRURIDE TECH. ALL RIGHTS RESERVED. MANUFACTURED FOR TRURIDE TECH LLC.
JETSON® IS A REGISTERED TRADEMARK USED UNDER LICENSE FROM JETSTREAM BRANDS LLC.
NO PORTION OF THIS DOCUMENT, INCLUDING SHAPE, GRAPHICS, AND DESIGN, MAY BE
REPRODUCED OR TRANSMITTED IN ANY FORM OR BY ANY MEANS.



802884

Contents

Safety Warnings 4
Warranty Coverage & Product Registration 7
1. About Your Product
1.1 Product Overview 8
1.2 What's in the Box 10
1.3 Product Specs 11
1.4 Online Resources 11
2. Installation Instructions
2.1 Starting Notes 12
2.2 Rider Suitability 12
2.3 Unfolding & Folding the Frame 13
2.4 Unfolding & Folding the Stem 16
2.5 Attaching & Positioning the Seat 18
2.6 Unfolding & Folding the Pedals 19
2.7 Securing the Front Reflector 20
2.8 Charging the Battery 21
3. Preparing to Ride
3.1 Pre-Ride Safety Checks 23
3.2 Tire Inflation & Pressure 24
3.3 Checking & Adjusting the Brakes 25
3.4 Adjusting Handlebar Rotation 27
3.5 Adjusting Handlebar Height 28
4. Operating Instructions
4.1 Powering On & Off 29
4.2 Understanding & Using the LCD Screen 30
4.3 Using the Headlight 32
4.4 Sounding the Horn 32
4.5 Checking Battery Charge Level 33
4.6 Using the Kickstand 33
4.7 Removing & Reinserting the Battery 34
5. Moving Instructions
5.1 Riding Your E-Bike 37
5.2 Pedaling With or Without Electronic Pedal Assistance 37
5.3 Using the Gears 38
5.4 Using the Throttle 39
5.5 Using the Brakes 39
5.6 Using Electronic Walk Assistance 40
5.7 Helmet Safety 40
5.8 Maximizing Speed & Riding Range 41
User Maintenance Instructions 42
Connect with Us 44

SAFETY WARNINGS.

KEEP THESE INSTRUCTIONS.

INSTRUCTIONS ON THE RISK OF FIRE OR INJURY TO PERSONS AND IMPORTANT SAFETY INSTRUCTIONS

- Before use, please read the user manual and safety warnings carefully, and make sure you understand and accept all the safety instructions. The user will be responsible for any loss or damage caused by improper use.
- **Failure to use correct charger can result in fire and explosion, resulting in property damage, injury, and death.**
- Before each cycle of operation, the operator shall perform the preoperation checks specified by the manufacturer: That all guards and pads originally supplied by the manufacturer are in proper place and in serviceable condition; That the braking system is functioning properly; That any and all axle guards, chain guards, or other covers or guards supplied by the manufacturer are in place and in serviceable condition; That tires are in good condition, inflated properly, and have sufficient tread remaining; The area that the product is to be operated should be safe and suitable for safe operation.
- Components shall be maintained and repaired in accordance with the manufacturer's specifications and using only the manufacturer's authorized replacement parts with installation performed by dealers or other skilled persons.
- Warning against recharging non-rechargeable batteries.
- Don't allow hands, feet, hair, body parts, clothing, or similar articles to come in contact with moving parts, wheels, or drive train, while the motor is running.
- This product should not be used by children or persons with reduced physical, sensory or mental capabilities, or lack of experience and knowledge, unless they have been given supervision or instruction (IEC 60335-1/A2:2006).
- Unsupervised children should not play with the product (IEC 60335-1/A2:2006).
- Adult supervision is required.
- Units shall not be operated to perform racing, stunt riding, or other maneuvers, which may cause loss of control, or may cause uncontrolled operator/passenger actions or reactions.
- Never use near motor vehicles.
- Avoid sharp bumps, drainage grates, and sudden surface changes. Scooter may suddenly stop.
- Avoid streets and surfaces with water, sand, gravel, dirt, leaves, and other debris. Wet weather impairs traction, braking, and visibility.
- Avoid riding around flammable gas, steam, liquid, or dust that could cause fire.
- Operators shall adhere to all of the manufacturer's recommendations and instructions, as well as comply with all laws and ordinances: Units without headlights shall be operated only with adequate daylight conditions of visibility, and; Owners shall be encouraged to highlight (for conspicuity) using lighting, reflectors, and for low-riding units, signal flags on flexible poles.
- Persons with the following conditions shall be cautioned not to operate: Those with heart conditions; Pregnant women; Persons with head, back, or neck ailments, or prior surgeries to those areas of the body; and persons with any mental or physical conditions that may make them susceptible to injury or impair their physical dexterity or mental capabilities to recognize, understand, and perform all of the safety instructions and to be able to assume the hazards inherent in unit use.
- Do not ride at night.

- Do not ride after drinking or taking prescription medication.
- Do not carry items when riding.
- Never operate the product barefooted.
- Always wear shoes and keep shoelaces tied.
- Make sure your feet are always placed securely on the deck.
- Operators always shall use appropriate protective clothing, including but not limited to a helmet, with appropriate certification, and any other equipment recommended by the manufacturer: Always wear protective equipment such as helmet, knee pads, and elbow pads.
- Always give way to pedestrians.
- Be alert to things in front and far away from you.
- Do not allow distractions when riding, such as answering the phone or engaging in any other activities.
- The product cannot be ridden by more than one person.
- When you ride the product along with other riders, always keep a safe distance to avoid a collision.
- When turning, be sure to maintain your balance.
- Riding with improperly adjusted brakes is dangerous and can result in serious injury or death.
- The brake may become hot while operating, do not touch the brake with your bare skin.
- Applying brakes too hard or too suddenly can lock up a wheel, which could cause you to lose control and fall. Sudden or excessive application of the brake may result in injury or death.
- If the brake loosens, please adjust with a hexagon wrench, screwdriver, or other applicable tool, or please contact the Jetson Care Team.
- Replace worn or broken parts immediately.
- Check whether all safety labels are in place and understood before riding.
- The owner shall allow the use and operation of the unit after a demonstration that such operators can understand and operate all components of the unit before use.
- Do not ride without proper training. Do not ride at high speeds, on uneven terrain, or on slopes. Do not perform stunts or turn abruptly.
- Recommended for indoor use.
- Prolonged exposure to UV rays, rain and the elements may damage the enclosure materials, store indoors when not in use.
- Personal e-mobility devices are not intended for use at high-altitude locations requiring increased clearance between electrical wires in electrical circuits, indicate that they are not intended for use at altitudes above 2,000 meters above sea level.
- Only use the battery(ies) specified by the manufacturer
- STORE INDOORS WHEN NOT IN USE. LEAVE INDOORS WHILE CHARGING OR WHEN NOT IN USE FOR DRIVING.
- **AVERTISSEMENT** - Risque d'incendie - Aucune des pieces ne peut être réparée par l'utilisateur.
- **WARNING** - Risk of Fire and Electric Shock - No User Serviceable Parts.
- Caution: Risk of Fire
- The rider should not exceed 300 lb | 136.1 kg.

MODIFICATIONS

Do not attempt to disassemble, modify, repair, or replace the unit or any components of the unit without instruction from the Jetson Care Team. This will void any warranty, and can lead to malfunctions which may cause injury.

ADDITIONAL OPERATION PRECAUTIONS

Do not lift the product off the ground while it is on and the wheels are in motion. This can result in freely spinning wheels, which may cause injury to yourself or others nearby. Do not jump on or off the product, and do not jump while using it. Always keep your feet firmly planted on the foot rest while in operation. Always check the battery charge before using.

DISPOSAL OF USED BATTERY



Battery may contain hazardous substances which could endanger the environment and human health. This symbol marked on the battery and/or packaging indicates that used battery shall not be treated as municipal waste. Batteries should be disposed of at an appropriate collection point for recycling. By ensuring the used batteries are disposed of correctly, you will help preventing potential negative consequences for the environment and human health. The recycling of materials will help to conserve natural resources. For more information about recycling of used batteries, please contact your local municipality waste disposal service.

NOTICE OF COMPLIANCE

This device complies with Part 15 of the FCC Rules. Operation is subject to the following two conditions: (1) this device may not cause harmful interference, and (2) this device must accept any interference received, including interference that may cause undesired operation. Warning: Changes or modifications to this unit not expressly approved by the party responsible for compliance could void the user's authority to operate the equipment.

NOTE: This equipment has been tested and found to comply with the limits for a Class B digital device, pursuant to Part 15 of the FCC Rules. These limits are designed to provide reasonable protection against harmful interference in a residential installation. This equipment generates, uses and can radiate radio frequency energy and, if not installed and used in accordance with the instructions, may cause harmful interference to radio communications. However, there is no guarantee that interference will not occur in a particular installation. If this equipment does cause harmful interference to radio or television reception, which can be determined by turning the equipment off and on, the user is encouraged to try to correct the interference by one or more of the following measures:

- Reorient or relocate the receiving antenna.
- Increase the separation between the equipment and receiver.
- Connect the equipment into an outlet on a circuit different from that to which the receiver is connected.
- Consult the dealer or an experienced radio/TV technician for help.
- Shielded cables must be used with this unit to ensure compliance with the Class B FCC limits.

⚠ WARNING:

Failure to comply with the following instructions may result in injury to the child or others.

- Keep small parts away from children during assembly.
- Accessory must be assembled and removed by an adult.
- Frequently inspect the product for damage.

*** ADULT ASSEMBLY IS REQUIRED.**

⚠ WARNING:

To reducte the risk of injury, adult supervision is required. Never use in roadways, near motor vehicles, on or near steep inclines or steps, swimming pools or other bodies of water; always wear shoes, and never allow more than 1 rider.

⚠ WARNING:

Always observe basic precautions when using this product, including the following:

(A) Read all instructions before using the product.

(B) To reduce risk of injury, strict supervision is essential when the product is used in closer to children.

(C) Do not insert fingers or hands into the product.

(D) Do not use this product if the elastic power cable or output cable is crunched, has breaked insulation, or has any other indications of damage.

(E) For all equipment. Instructions should state: This appliance is not intended for use in ambient temperatures below 14°F (-10°C) or above an ambient temperature of 104°F (40°C).

(F) For all devices, the instructions should include the information:
The battery is designed to be charged when the ambient temperature is between 32°F (0°C) and 104°F (40°C). Never charge the battery when the ambient temperature is outside this range.

CALIFORNIA PROPOSITION 65

⚠ WARNING:

THIS PRODUCT CAN EXPOSE YOU TO CHEMICALS INCLUDING CADMIUM, WHICH IS KNOWN TO THE STATE OF CALIFORNIA TO CAUSE CANCER AND BIRTH DEFECTS OR OTHER REPRODUCTIVE HARM.
FOR MORE INFORMATION GO TO:
WWW.P65WARNINGS.CA.GOV.

GENERAL LIMITED WARRANTY

YOUR NEW JETSON PRODUCT IS WARRANTED AGAINST DEFECTS IN MATERIALS AND WORKMANSHIP AS INDICATED ON RIDEJETSON.COM/WARRANTY FOR A PERIOD OF TIME FROM THE DATE OF ORIGINAL RETAIL PURCHASE WHEN USED IN ACCORDANCE WITH JETSON'S USER MANUALS (REFER TO RIDEJETSON.COM/SUPPORT). **UNDER THIS WARRANTY, YOU WILL BE ABLE TO DIRECT YOUR CLAIMS TO JETSON EVEN IN SITUATIONS WHERE YOU PURCHASED THE JETSON PRODUCT FROM ONE OF OUR AUTHORIZED RETAILERS.** TO READ THE FULL TERMS OF OUR WARRANTY, VISIT RIDEJETSON.COM/WARRANTY.

PRODUCT REGISTRATION

REGISTER YOUR NEW JETSON TO FAST-TRACK YOU TOWARDS PERSONALIZED PRODUCT AND WARRANTY SUPPORT. MAKE YOUR MOVE AT RIDEJETSON.COM/PRODUCT-REGISTRATION.

WARRANTY COVERAGE & PRODUCT REGISTRATION.

To exercise your product's warranty or inquire about warranty coverage, contact us directly.

www.ridejetson.com

1. ABOUT YOUR PRODUCT.

1.1 Product Overview

1. HANDLEBAR (DETAILS PAGE 10)
2. TELESCOPING STEM
3. STEM CLAMP
4. STEM LOCKING LATCH
5. HEADLIGHT
6. FRONT FORK
7. FRAME
8. FRAME LOCKING LATCH
9. BATTERY LOCK
10. FRAME CHARGING PORT WITH COVER
11. SEAT*
12. SEAT POST
13. REAR REFLECTOR
14. SEAT CLAMP
15. WHEEL (×2; FRONT & REAR)
16. TIRE VALVE WITH DUST CAP (×2; FRONT & REAR)
17. MUDGUARD (×2; FRONT & REAR)
18. FOLDING MAGNET (×2; FRONT & REAR)
19. DISC BRAKE (×2; FRONT & REAR)
20. PEDAL (×2; LEFT & RIGHT)
21. CRANKSET
22. BIKE STAND
23. MOTOR
24. CHAIN
25. DERAILLEUR
26. JOCKEY WHEEL
27. KICKSTAND
28. BATTERY (REMOVABLE)
29. KEY (×2)
30. CHARGER
31. CHARGING CABLE
32. WHEEL REFLECTOR (×2; FRONT & REAR)

**REQUIRES ASSEMBLY*

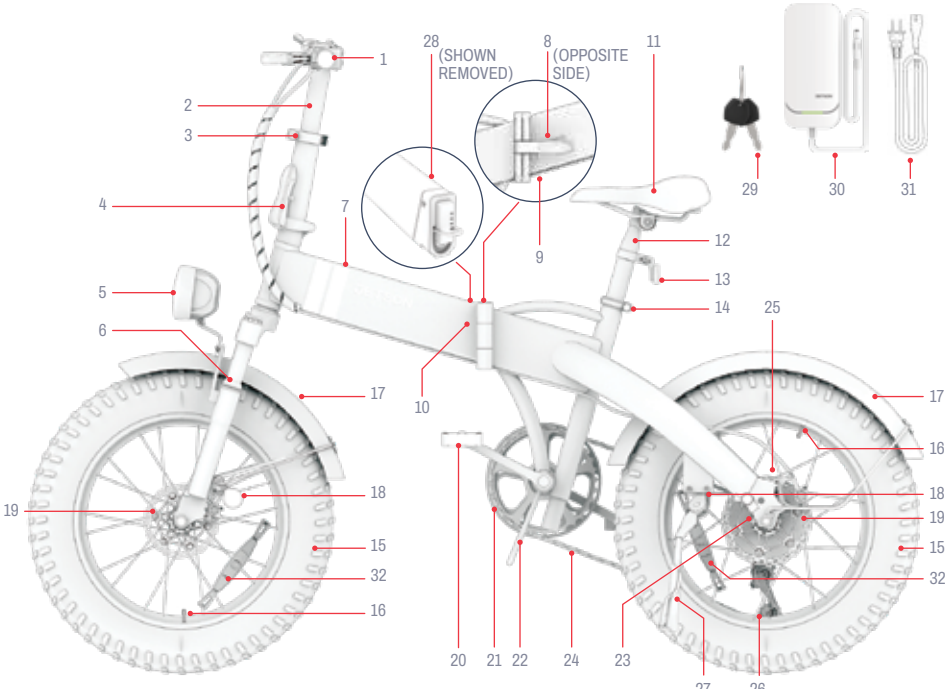

NOTE: IMAGES MAY NOT REFLECT EXACT APPEARANCE OF ACTUAL PRODUCT.

1. LIGHT BUTTON
2. HORN BUTTON
3. UP (▲) BUTTON
4. DOWN (▼) BUTTON
5. POWER/MODE (⏻) BUTTON
6. LCD SCREEN
7. LEFT/FRONT HANDBRAKE
8. FRONT REFLECTOR
9. HANDLEBAR
10. HANDLEBAR CLAMP
11. GEAR SETTING
12. GEAR UPSHIFT LEVER
13. RIGHT/FRONT HANDBRAKE
14. GEAR DOWNSHIFT BUTTON
15. ACCELERATION THROTTLE

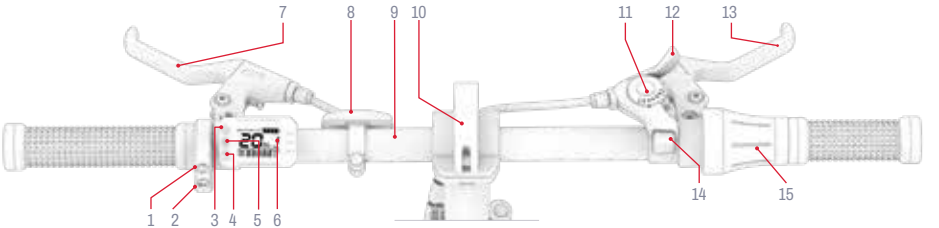

1.2 What's in the Box

MULTI-TOOL INCLUDED FOR ASSEMBLY, ADJUSTMENT, AND MAINTENANCE:

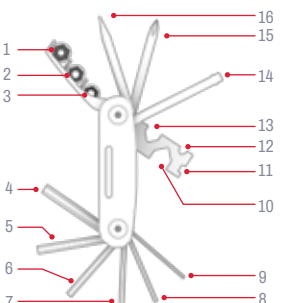

MULTI-TOOL TIP IDENTIFICATION:	
1. 10MM SOCKET	9. 2MM ALLEN KEY
2. 9MM SOCKET	10. 15MM HEX WRENCH
3. 8MM SOCKET	11. 14 GAUGE SPOKE WRENCH
4. 6MM ALLEN KEY	12. 8MM HEX WRENCH
5. 5MM ALLEN KEY	13. 10MM HEX WRENCH
6. 4MM ALLEN KEY	14. SOCKET SCREW
7. 3MM ALLEN KEY	15. PHILLIPS-HEAD SCREWDRIVER
8. 2.5MM ALLEN KEY	16. FLAT-HEAD SCREWDRIVER

1.3 Product Specs

- WEIGHT LIMIT: 300.0 LB | 136.1 KG
- PRODUCT WEIGHT: 63.3 LB | 28.7 KG
- RECOMMENDED AGE: 14+
- PRODUCT DIMENSIONS, UNFOLDED:
  70.9 IN (L) × 23.6 IN (W) × 53.9 IN (H) | 180.0 CM (L) × 59.9 CM (W) × 136.9 CM (H)
- PRODUCT DIMENSIONS, FOLDED:
  41.3 IN (L) × 21.0 IN (W) × 32.0 IN (H) | 104.9 CM (L) × 53.3 CM (W) × 81.2 CM (H)
- TIRE SIZE: 20.0 IN (H) × 4.0 IN (W) | 50.8 CM (H) × 10.16 CM (W)
- MAX SPEED: 20 MPH | 32.2 KM/H*
- MAX PEDAL ASSIST RANGE: 37.0 MILES | 59.5 KM *
- MAX THROTTLE RANGE: 27.0 MILES | 43.5 KM *
- BRAKE TYPE: HANDBRAKE CONTROL OF FRONT AND REAR WHEEL DISC BRAKES
- BATTERY: 46.8V, 10AH
- BATTERY TYPE: LITHIUM-ION
- MOTOR: 750W **
- CHARGER OUTPUT: 54.6VDC, 2.0A MAX
- CHARGER VOLTAGE: UL 100 - 240V
- CHARGING TIME: APPROX. 6 HOURS
- RECOMMENDED TIRE PRESSURE: 20 PSI
- NUMBER OF GEARS: 7
- NUMBER OF PEDAL ASSIST LEVELS: 5
- WATER RESISTANCE RATING: IPX5
- UL CERTIFICATION: 2849

**PRODUCT RANGE, SPEED, BATTERY LIFE, AND OTHER SPECIFICATIONS MAY VARY BASED ON RIDER AND RIDING CONDITIONS.*

***PEAK POWER*

1.4 Online Resources

Scan for our most updated product onboarding materials and support resources.

Find this user manual online at https://cdn.shopify.com/s/files/1/2530/6734/files/WARREN-MANUAL-web-1751317134123.pdf

Find our collection of user manuals at https://ridejetson.com/pages/product-manuals

2. INSTALLATION INSTRUCTIONS.

2.1 Starting Notes

- KICK OFF YOUR ADVENTURE RIGHT. PRIOR TO USE OF THIS PRODUCT, CAREFULLY READ THE ENTIRE USER MANUAL, INCLUDING SAFETY WARNINGS. MAKE SURE YOU UNDERSTAND, ACCEPT, AND ADHERE TO ALL:
  - MANUFACTURER'S RECOMMENDATIONS.
  - SAFETY INSTRUCTIONS AND WARNINGS.
  - LOCAL RIDING AND OPERATIONAL LAWS AND ORDINANCES.

- TAKE CARE WHEN UNBOXING. REMOVE ALL PACKAGING AND PROP THE E-BIKE UPRIGHT ON ITS KICKSTAND PRIOR TO ASSEMBLY. (REFER TO SECTION 4.6)

- THE DIRECTIONS GIVEN IN THIS MANUAL—RIGHT, LEFT, FRONT/FORWARD, AND REAR/BACK—ARE ORIENTED AS THE RIDER WOULD SEE THEM WHEN SEATED ON THE E-BIKE. THE "RIGHT SIDE" OF THE E-BIKE, FOR EXAMPLE, IS THE SIDE WHERE THE RIDER'S RIGHT HAND WILL BE.

2.2 Rider Suitability

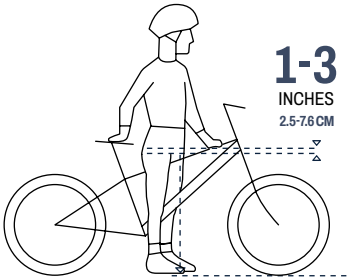

For safe and comfortable riding, there should be a clearance of at least 1-3 inches (2.5-7.6 cm) between the crotch and the top tube of the bike frame when the rider straddles the product with both feet flat on the ground.

2.3 Unfolding & Folding the Frame

WHEN TO UNFOLD: FOR SETUP* AND RIDING
WHEN TO FOLD: FOR STORAGE AND TRANSPORT

To Unfold:

1. POSITION THE BIKE UPRIGHT ON THE BIKE STAND.
2. IF THE MAGNETS ON THE FRONT AND REAR WHEEL ARE COUPLED, DISCONNECT THEM BY PULLING THE FRONT AND REAR WHEELS AWAY FROM ONE ANOTHER.

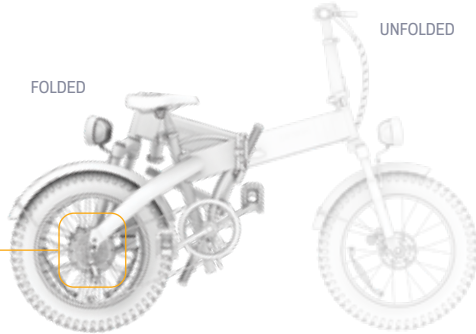

***NOTE:** When unfolding for set-up, the seat will not yet be attached.

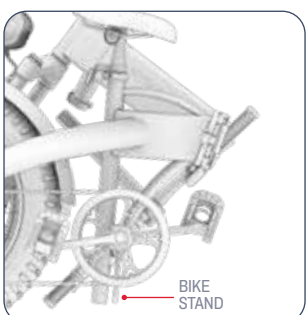



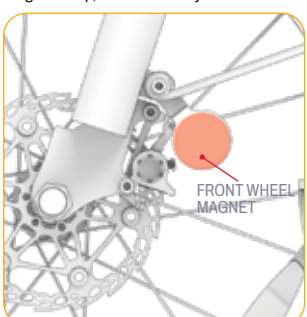

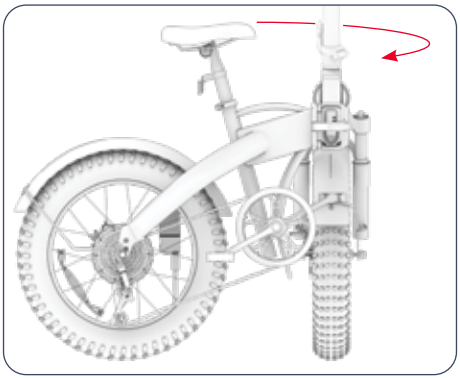

3. PIVOT THE FRONT OF THE BIKE AROUND THE HINGE POINT UNTIL THE FRONT AND BACK OF THE FRAME FORM A STRAIGHT LINE.

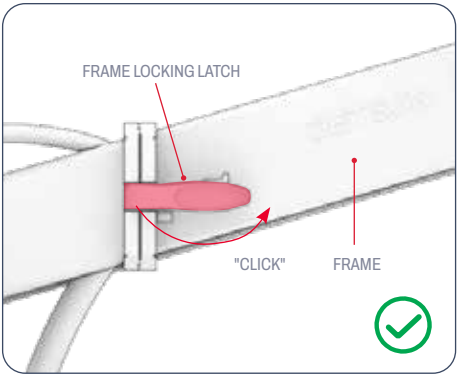

4. HOLD BOTH ENDS OF THE FRAME STEADY AND FORCEFULLY PUSH THE FRAME LOCKING LATCH CLOSED.

IMPORTANT: TO ENSURE THAT THE LATCH IS PROPERLY CLOSED AND SECURE ON THE FRAME, MAKE SURE THAT THE LATCH "CLICKS" CLOSED.

⚠ **WARNING:** To avoid a collapsing of the frame that could result in injury, never ride your product without the frame folding latch securely closed.

To Fold:

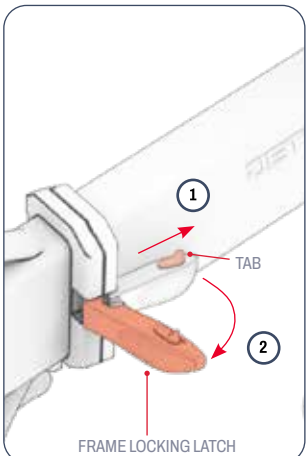

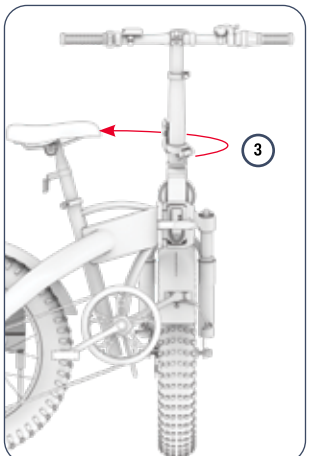

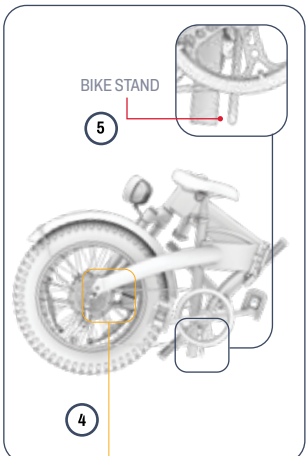

1. PUSH AND HOLD THE TAB ON THE FRAME LOCKING LATCH FORWARD.
2. FORCEFULLY PULL THE LATCH OPEN .
3. PIVOT THE FRONT OF THE BIKE TO THE LEFT AND AROUND TOWARDS THE REAR OF THE BIKE UNTIL THE FRONT WHEEL IS NEXT TO THE REAR WHEEL AND THE MAGNETS ON THE TWO WHEELS ARE ALIGNED.
4. PUSH THE TWO WHEELS TOGETHER SO THAT THE MAGNETS CONNECT, SECURING THE BIKE IN THE FOLDED POSITION.
5. PROP THE BIKE ON THE BIKE STAND TO KEEP IT UPRIGHT WHILE IN THE FOLDED POSITION.



REAR WHEEL MAGNET

FRONT WHEEL MAGNET

2.4 Unfolding & Folding the Stem

WHEN TO UNFOLD: FOR SETUP* AND RIDING
WHEN TO FOLD: FOR STORAGE AND TRANSPORT

⚠ **WARNING:** To avoid a collapsing of the stem that could result in injury, never ride your e-bike without the handlebar upright and the stem locking latch securely closed.

To Raise The Stem:

1. RAISE THE STEM UP UNTIL IT IS FULLY UPRIGHT AND RESTING ON THE STEM BASE.
2. FORCEFULLY PUSH THE STEM LOCKING LATCH CLOSED AGAINST THE STEM.
3. TO ENSURE THAT THE LATCH IS PROPERLY CLOSED AND SECURE ON THE STEM, MAKE SURE THAT THE LATCH "CLICKS" CLOSED.

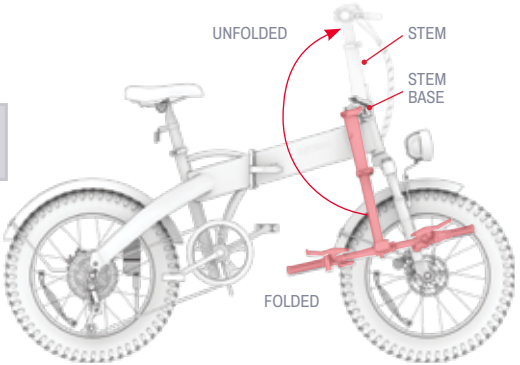

***NOTE:** When unfolding for set-up, the seat will not yet be attached.

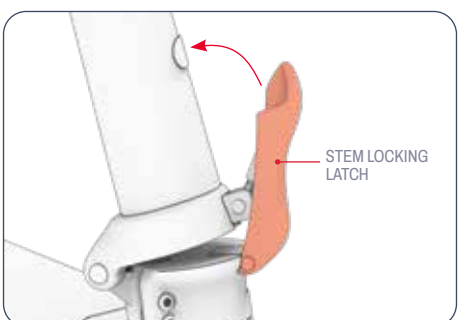



To Lower The Stem:

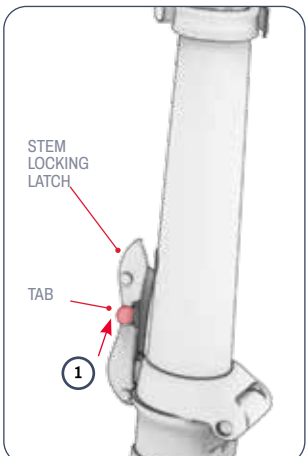

1. PUSH AND HOLD THE TAB ON THE STEM LOCKING LATCH UP.

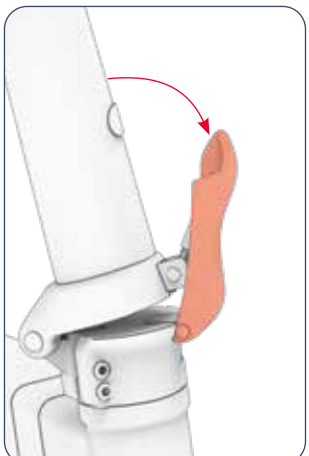

2. FORCEFULLY PULL THE STEM LOCKING LATCH OPEN.

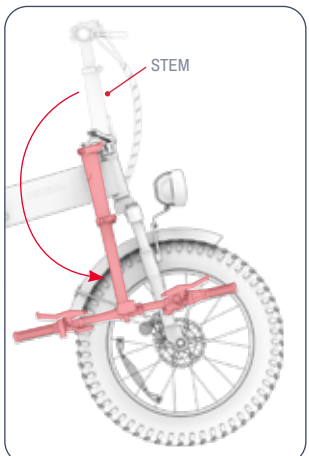

3. PIVOT OF THE STEM DOWN ON THE RIGHT SIDE OF THE BIKE.

2.5 Attaching & Positioning the Seat

1. PULL OPEN THE LATCH ON THE SEAT CLAMP.
2. LOCATE THE "MINIMUM INSERTION" MARK NEAR THE BOTTOM OF THE SEAT POST.
3. HOLD THE SEAT IN POSITION ABOVE THE BIKE, WITH THE WIDEST PART OF THE SEAT AT THE REAR.
4. LOWER THE SEAT POST DOWN THROUGH THE CLAMP AND INTO THE SEAT TUBE UNTIL THE "MINIMUM INSERTION" MARK IS BELOW THE CLAMP.

⚠ **WARNING:** If the "minimum insertion" mark is visible above the seat clamp, the seat post is not deep enough in the seat tube. To avoid injury, always ensure that the seat post is inserted past the "minimum insertion" mark.

5. WHILE HOLDING THE SEAT AT THE DESIRED HEIGHT, CLOSE THE LATCH ON THE SEAT CLAMP. IF NECESSARY, TIGHTEN THE CLAMP BY TURNING THE KNOB CLOCKWISE WITH THE 5MM ALLEN KEY TIP OF THE MULTITOOL.

⚠ **CAUTION:** Ensure that the seat post is not inserted past the "max insertion" mark.

6. CHECK THAT THE SEAT IS SECURE: USE YOUR HAND TO PUT DOWNWARD PRESSURE ON THE SEAT. IF THE SEAT POST SLIPS FURTHER DOWN INTO THE TUBE, BRING IT BACK TO POSITION AND TIGHTEN THE CLAMP BY TURNING THE KNOB CLOCKWISE.

⚠ **WARNING:** To avoid a collapsing of the seat post into the seat tube that could result in injury, ensure that the clamp is secure around the seat post.

"MAX INSERTION" MARK

⚠ **TROUBLESHOOTING:**
- If the post cannot fit through the clamp, widen the clamp opening by turning the clamp knob counterclockwise with the 5mm Allen Key tip of the multitool.
- If you cannot open or close the clamp latch, the knob may be too tight. Loosen the knob by turning it counterclockwise with the 5mm Allen Key tip of the multitool for ½ rotation at a time until you can utilize the latch.

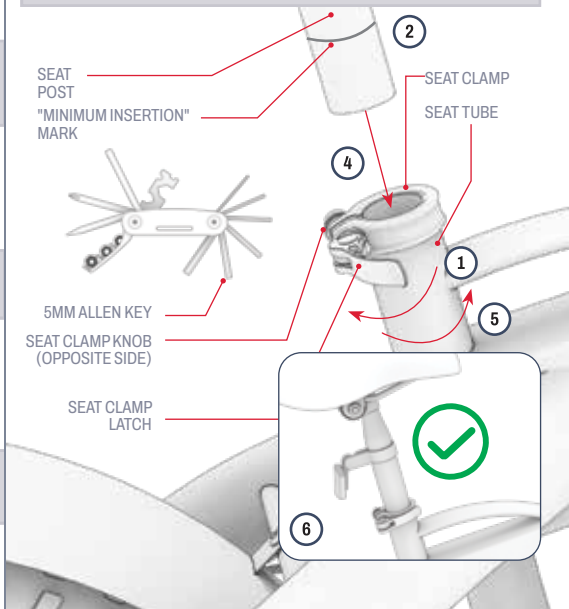

2.6 Unfolding & Folding the Pedals

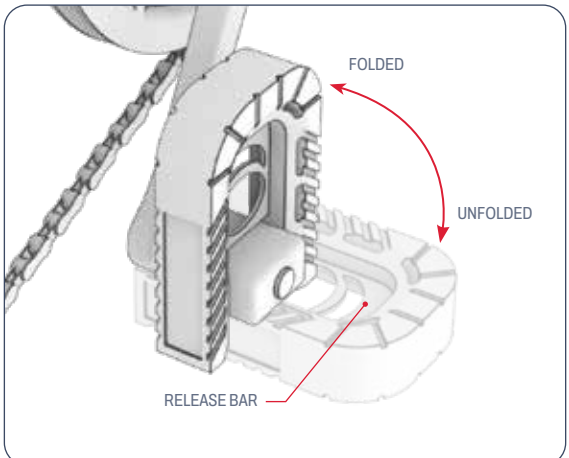

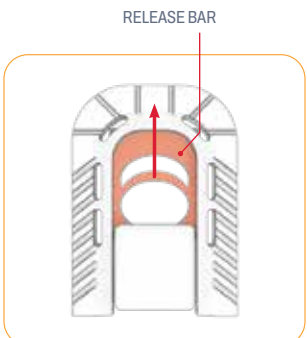

FOR STORAGE IN COMPACT SPACES, TUCK THE PEDALS UP AND OUT OF THE WAY.

TO UNFOLD:

1. PLACE YOUR FINGERS AROUND THE RELEASE BAR INSIDE THE PEDAL.
2. PULL THE BAR TOWARDS THE TIP OF THE PEDAL AND PIVOT THE PEDAL DOWN UNTIL IT SNAPS INTO PLACE.

TO FOLD:

1. PLACE YOUR FINGERS AROUND THE RELEASE BAR INSIDE THE PEDAL.
2. PULL OUTWARDS AND DOWN UNTIL THE PEDAL SNAPS INTO PLACE.

2.7 Securing the Front Reflector

1. ROTATE THE FRONT REFLECTOR AROUND THE HANDLEBAR UNTIL THE REFLECTOR IS FACING THE FRONT OF THE BIKE.
2. TIGHTEN THE REFLECTOR CLAMP BY TURNING THE SCREW CLOCKWISE WITH THE PHILLIPS-HEAD SCREWDRIVER TIP OF THE MULTI-TOOL.

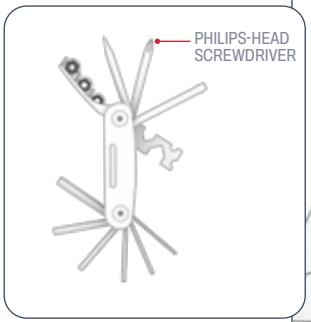

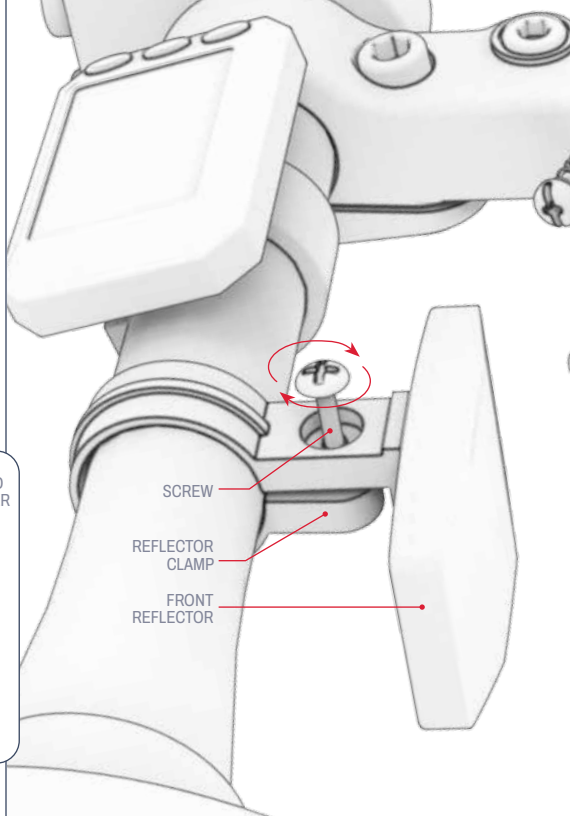

2.8 Charging the Battery

IT CAN TAKE APPROXIMATELY 6 HOURS TO BRING THE BATTERY TO FULL CHARGE. FULLY CHARGE THE BATTERY PRIOR TO FIRST USE. THE BATTERY CAN BE CHARGED WHEN IT IS SECURED IN THE FRAME OR REMOVED FROM THE FRAME. (SEE SECTION 4.7 FOR REMOVAL.)

1. CONNECT THE CHARGING CABLE WITH THE CHARGER.
2. IF CHARGING THE BATTERY WHILE INSTALLED, PULL OPEN THE CHARGING PORT COVER ON THE BIKE FRAME.
3. PLUG THE CHARGING CABLE INTO THE WALL, AND THEN PLUG THE CHARGER INTO THE CHARGING PORT.
4. WHEN THE INDICATOR LIGHT ON THE CHARGER TURNS FROM RED TO GREEN, YOUR BATTERY HAS REACHED FULL CHARGE. REMOVE THE CHARGER FROM THE CHARGING PORT AND UNPLUG THE CHARGING CABLE FROM THE WALL OUTLET.
5. IF CHARGING THE BATTERY WHILE INSTALLED, PULL OPEN THE CHARGING PORT COVER ON THE BIKE FRAME.

CHARGING INDICATOR LIGHT ON THE CHARGER:		STATUS
	RED ILLUMINATION	CHARGING
	GREEN ILLUMINATION	CHARGING COMPLETE

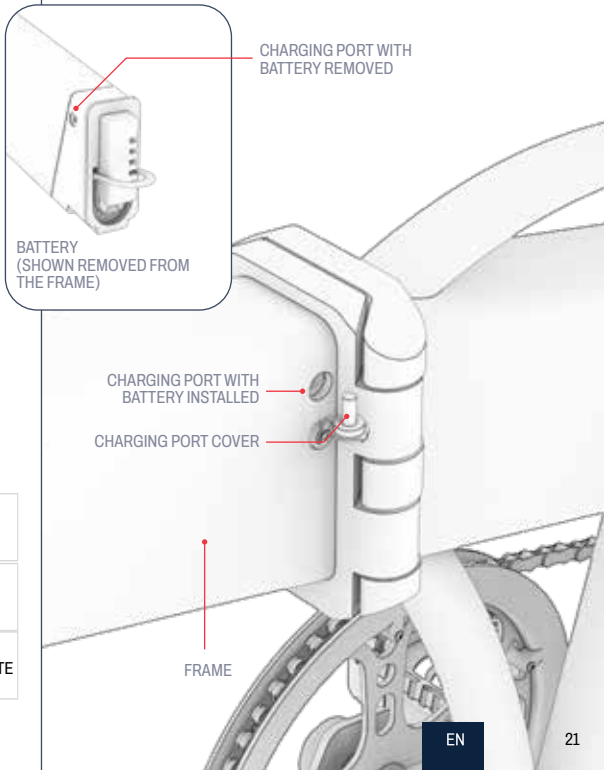

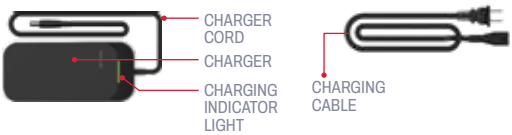

Important Charging Notes:

- ALWAYS KEEP THE CHARGING PORT CLOSED WHEN NOT ACTIVELY CHARGING THE BATTERY.
- NEVER TURN ON THE PRODUCT WHILE IT IS CHARGING.
- DO NOT USE RELOCATABLE POWER TAPS.
- FOR BEST BATTERY HEALTH, CHARGE THE BATTERY FULLY DURING EACH CHARGING SESSION—ABOUT 6 HOURS.
- NEVER LEAVE YOUR PRODUCT CHARGING OVERNIGHT OR FOR EXTENDED PERIODS OF TIME.
- DO NOT ATTEMPT TO REMOVE OR DISASSEMBLE THE BATTERY.
- CHARGING AMBIENT TEMPERATURE RANGE: 32°F (0°C) - 104°F (40°C)
- OPERATING AMBIENT TEMPERATURE RANGE: 32°F(0°C)-104°F(40°C)
- ALWAYS KEEP THE CHARGING PORT COVER CLOSED WHEN NOT ACTIVELY CHARGING THE PRODUCT.
- DO NOT USE THIS PRODUCT IF THE FLEXIBLE POWER CORD OR OUTPUT CABLE IS FRAYED, HAS BROKEN INSULATION , OR ANY OTHER SIGNS OF DAMAGE.
- CHECK THAT THE CHARGER MODEL NUMBER ON THE CHARGER LABEL MATCHES THE CHARGER MODEL NUMBER LISTED ABOVE.
- CHECK THAT THE CHARGER LABEL IDENTIFIES THE CHARGER AS COMPATIBLE WITH YOUR JETSON MODEL. YOU CAN FIND YOUR JETSON MODEL'S NAME AND SKU ON A LABEL ADHERED TO THE TOP, SIDE, OR UNDERSIDE OF THE PRODUCT'S FRAME OR STANDING DECK.

IMPORTANT:

ONLY USE THE INCLUDED CHARGER OR ONE OBTAINED DIRECTLY THROUGH JETSON LABELED WITH C120-V546A20 OR THE PART SKU PJWRNFT-CH.

⚠ WARNING: FAILURE TO USE CORRECT CHARGER CAN RESULT IN FIRE AND EXPLOSION, RESULTING IN PROPERTY DAMAGE, INJURY, AND DEATH.



THIS IS AN EXAMPLE OF THE MARKING YOUR CHARGER WILL HAVE.

3. PREPARING TO RIDE.

3.1 Pre-Ride Safety Checks

CONDUCT THESE IMPORTANT SAFETY CHECKS BEFORE EVERY JOURNEY:

Brakes:

- MAKE SURE THE BRAKES WORK PROPERLY SUCH THAT THE HANDBRAKE LEVERS ARE SECURED TO THE HANDLEBAR AND LUBRICATED SO THEY COMPRESS EASILY.
- ENSURE THAT THE BRAKE PADS ARE NOT WORN, AND THAT THEY ARE CENTERED AND ALIGNED WITH THE ROTOR.

Frame:

- CHECK THAT THE BIKE FRAME AND THE FORK ARE NOT DAMAGED, BENT, OR BROKEN.
- ENSURE THAT THE STEM-TO-FORK BOLT IS NOT OVERTIGHTENED. AN OVERTIGHTENED BOLT CAN LEAD TO A MALFUNCTION THAT PUTS RIDER SAFETY AT RISK.
- CHECK THAT THE DRIVE SYSTEM IS IN WORKING ORDER AND SECURELY ATTACHED TO THE FRAME.
- CHECK THAT THE FRAME IS SECURED IN THE RIDING POSITION BY THE FRAME LOCKING LATCH.

Cranks & Pedals:

- CHECK THAT THE PEDALS ARE SECURELY TIGHTENED TO THE CRANKS.
- CHECK THAT THE CRANKS AND DRIVE SYSTEM ARE SECURELY TIGHTENED TO THE FRAME OF THE BIKE AND ROTATE FREELY.

Steering:

- CHECK THAT THE STEM IS SECURED BY THE STEM LOCKING LATCH.
- CHECK THAT THE HANDLEBAR IS SECURED IN POSITION BY THE HANDLEBAR CLAMP.

Wheels:

- CHECK THAT TIRES DO NOT SHOW SIGNS OF EXCESSIVE WEAR OR DAMAGE.
- MAKE SURE THAT THE TIRES ARE INFLATED TO WITHIN THE RECOMMENDED PRESSURE OF **20 PSI**.
- CHECK THE WHEEL RIMS AND WHEEL SPOKES ARE NOT DAMAGED, BROKEN, OR BENT.
- CHECK THAT THE AXLE NUTS ARE TIGHT.

Chain:

- CHECK THAT THE TENSION OF THE CHAIN IS SUCH THAT YOU CAN ONLY LIFT THE MIDDLE OF THE CHAIN ½ INCH.
- CHECK THAT THE CHAIN IS PROPERLY SITUATED ON THE CRANKSET, DERAILLEUR, AND JOCKEY WHEEL.

3.2 Tire Inflation & Pressure

BEFORE YOUR FIRST RIDE, YOU WILL NEED TO ADD AIR TO THE TIRES TO BRING THEM TO WITHIN THE RECOMMENDED PRESSURE OF **20 PSI** (POUNDS PER SQUARE INCH). USE A GAUGE TO CHECK THAT THE TIRE PRESSURE FALLS WITHIN THIS RANGE PRIOR TO EVERY RIDE.

To Add Air:

1. REMOVE THE DUST CAP FROM THE TIRE VALVE ON ONE WHEEL BY TWISTING IT COUNTERCLOCKWISE. SET ASIDE.
2. FOLLOW THE MANUFACTURER'S INSTRUCTIONS ON YOUR AIR PUMP TO INSERT AIR INTO THE TIRE. CHECK PERIODICALLY WITH A GAUGE AND CONTINUE ADDING AIR UNTIL YOU REACH **20 PSI**.
3. REMOVE THE AIR PUMP AND REPLACE THE DUST VALVE BY TWISTING IT ON CLOCKWISE.
4. REPEAT WITH THE OTHER TIRE.

IMPORTANT: Only use a manual air pump to inflate the tires. Never use an air compressor; doing so may cause the tire tubes to pop.

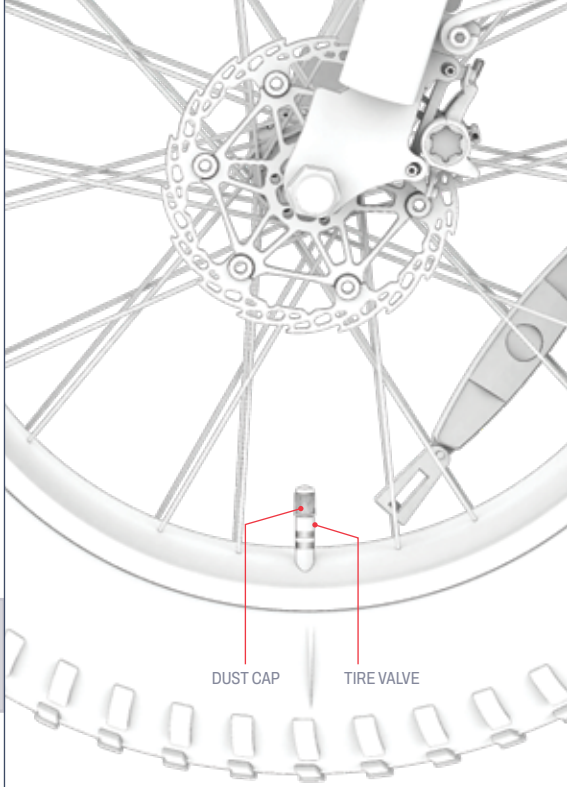

3.3 Checking & Adjusting the Brakes

Brake Safety & Functionality Check:

AFTER ASSEMBLY AND PRIOR TO EVERY RIDE, CHECK THAT THE BRAKES ARE FUNCTIONING PROPERLY AND SAFELY TO SLOW THE WHEEL DOWN AND BRING IT TO A STOP BY PERFORMING THE FOLLOWING STEPS:

1. WALK WITH YOUR BIKE AND GENTLY PULL THE LEFT HANDBRAKE.
2. CHECK THAT THE FRONT CALIPER CLOSES PROPERLY ON THE DISC AND SLOWS THE WHEEL ROTATION DOWN.
3. REPEAT, PULLING THE LEFT HANDBRAKE WITH MORE PRESSURE AND CHECKING THAT THE FRONT WHEEL IS BROUGHT TO A STOP.
4. REPEAT STEPS 1 - 3 WITH THE RIGHT HANDBRAKE AND THE REAR WHEEL.

Proper Brake Caliper & Pad Positioning:

BIKE BRAKES REQUIRE ALL ELEMENTS TO BE IN EXACT ALIGNMENT AND PLACEMENT IN ORDER TO FUNCTION PROPERLY. **A RUBBING OR SQUEAKING SOUND COMING FROM A BRAKE AREA (EITHER CONSTANT OR INTERMITTENT) IS A GOOD INDICATOR THAT SOMETHING IS OUT OF ALIGNMENT AND NEEDS TO BE ADJUSTED.**

THE CAUSE OF THE NOISE IS LIKELY A MISALIGNED CALIPER, CAUSING THE BRAKE PADS INSIDE OF THEM TO RUB AGAINST THE DISC EVEN WHEN THE CALIPER IS OPEN. THE PADS SHOULD ONLY COME IN CONTACT WITH THE DISC WHEN THE CALIPER IS CLOSED BECAUSE THE HANDBRAKE HAS BEEN PULLED.

IN THE CASE OF MISALIGNMENT, ADJUST THE BRAKE CALIPER USING THE FOLLOWING INSTRUCTIONS.

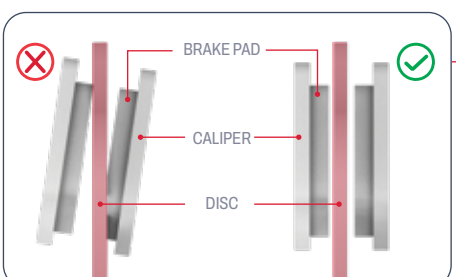

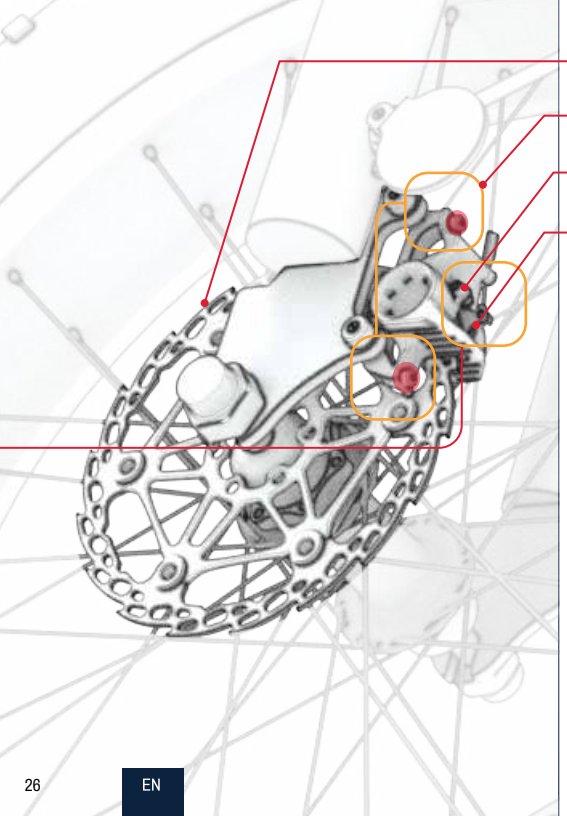

Adjusting the Brake Caliper:

YOU MAY NEED THE 5MM ALLEN KEY TIP OF THE MULTI-TOOL.

1. ON THE BRAKE THAT NEEDS ADJUSTING, LOCATE THE CALIPER, BRAKE PADS, AND DISC.
2. LIFT THAT WHEEL OF THE BIKE AND GIVE IT A SPIN. WATCH THE DISC REVOLVE BETWEEN THE BRAKE PADS, AND NOTICE WHICH PAD IS RUBBING AGAINST THE DISC.
3. REST THE BIKE ON THE KICKSTAND. (SEE SECTION 4.6).
4. WHEN LOOKING AT THE CALIPER FROM THE BACK OF THE WHEEL, LOCATE THE BOLT ABOVE AND THE BOLT BELOW THE CALIPER. USE THE 5MM ALLEN KEY TO EACH BOLT BY TURNING IT COUNTERCLOCKWISE FOR 4 - 5 ROTATIONS.
5. MOVE THE CALIPER OUT OF ALIGNMENT UNTIL THE FOLLOWING CONDITIONS ARE MET:
   - THE TOP OF THE PADS ARE ALIGNED WITH THE EDGE OF THE DISC.
   - NO PART OF EITHER PAD IS TOUCHING THE DISC.
   - THE PADS ARE PARALLEL TO THE DISC.
6. WITH THE CALIPER IN THE DESIRED POSITION, FULLY TIGHTEN ONE BOLT AND THEN THE OTHER BY TURNING IT CLOCKWISE WITH THE ALLEN KEY.
7. CHECK THAT THE CALIPER IS SECURE AND CONDUCT THE BRAKE SAFETY & FUNCTIONALITY CHECK (START OF SECTION 3.3) AGAIN.

3.4 Adjusting Handlebar Rotation

THE HANDLEBAR CAN BE ROTATED SLIGHTLY FORWARD OR BACKWARDS SO THAT ALL OF THE FEATURES AND FUNCTIONS ON IT ARE IN THE IDEAL POSITION. THEY SHOULD BE EASILY REACHABLE WHILE RIDING AND ANGLED IDEALLY IN THE LINE OF SIGHT FOR EACH USER. THE HANDBRAKES, ESPECIALLY, SHOULD SIT AT AN ANGLE AT WHICH THEY ARE EASY TO GRIP.

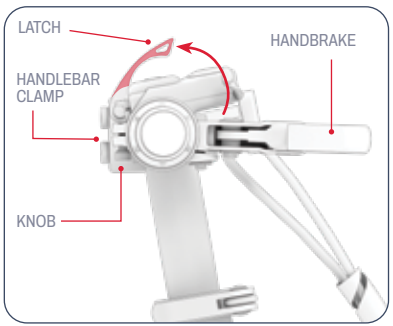

1. PULL OPEN THE LATCH ON THE HANDLEBAR CLAMP.

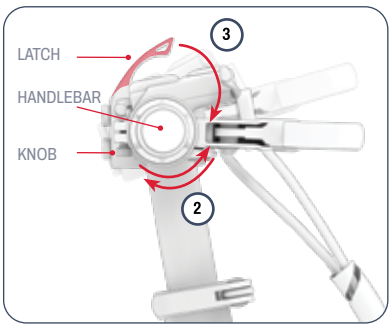

2. ROTATE THE HANDLEBAR FORWARD OR BACKWARD WITHIN THE HANDLEBAR CLAMP TO REPOSITION IT.
3. WHILE HOLDING THE HANDLEBAR IN THE NEW POSITION, PUSH THE LATCH CLOSED.

TROUBLESHOOTING:

- If the handlebar does not stay secure with the clamp closed, you may need to tighten the clamp. First, pull the clamp latch open. Then, finger tighten the knob by turning it clockwise for a few rotations, and re-close the clamp latch.
- If you cannot close the latch with ease, the knob may be too tight. Loosen the knob slightly by turning it counterclockwise for ½ rotation. Repeat if necessary until the latch can be closed.

3.5 Adjusting Handlebar Height

1. PULL OPEN THE LATCH ON THE STEM CLAMP.
2. LOOSEN THE CLAMP KNOB BY TURNING IT COUNTERCLOCKWISE.
3. RAISE OR LOWER THE STEM UNTIL THE HANDLEBAR IS AT THE DESIRED HEIGHT.
4. PUSH THE LATCH CLOSED.
5. WHILE HOLDING THE HANDLEBAR IN PLACE, RETIGHTEN THE CLAMP KNOB BY TURNING IT CLOCKWISE.
6. CHECK THAT THE HANDLEBAR IS SECURE: USE YOUR HAND TO PUT DOWNWARD PRESSURE ON THE HANDLEBAR. IF THE STEM SLIPS DOWN INTO THE STEM TUBE, BRING THE HANDLEBAR BACK TO POSITION AND TIGHTEN THE CLAMP BY FURTHER TURNING THE KNOB CLOCKWISE.

⚠ **TROUBLESHOOTING:** If you cannot open or close the clamp latch, the knob may be too tight. Loosen the knob by turning it counterclockwise for ½ rotation at a time until you can utilize the latch.

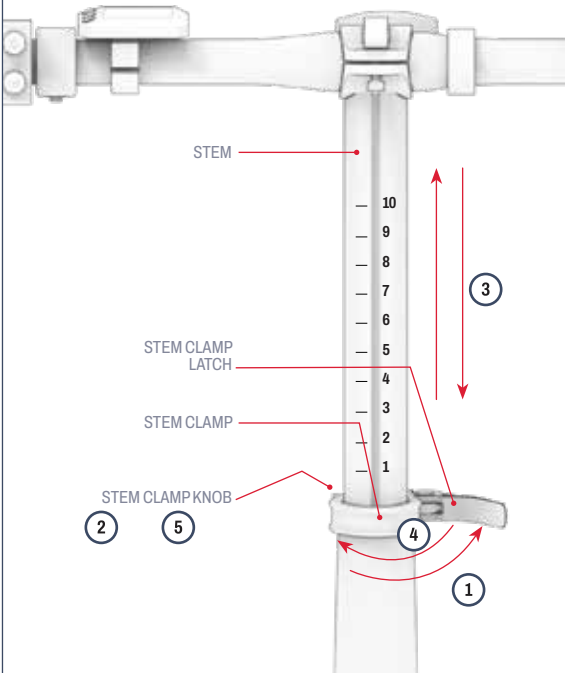

4. OPERATING INSTRUCTIONS.

4.1 Powering On & Off

TO TURN THE E-BIKE ON OR OFF: PRESS AND HOLD THE POWER/MODE BUTTON FOR 2 - 3 SECONDS.

INTELLIGENT AUTO-OFF FEATURE:
TO PRESERVE BATTERY POWER, YOUR BIKE WILL AUTOMATICALLY POWER OFF AFTER 10 MINUTES WITHOUT MOVEMENT.

IMPORTANT:
To preserve battery power, always remember to power your bike off when making a pit stop or putting it away for the night.

⚠ **WARNING:**
To avoid damage to the battery and electrical system that could result in malfunction and compromise safety, never power on your e-bike while it is charging.

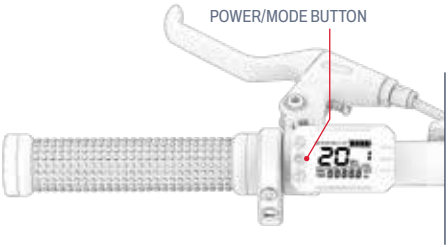

4.2 Understanding & Using the LCD Screen

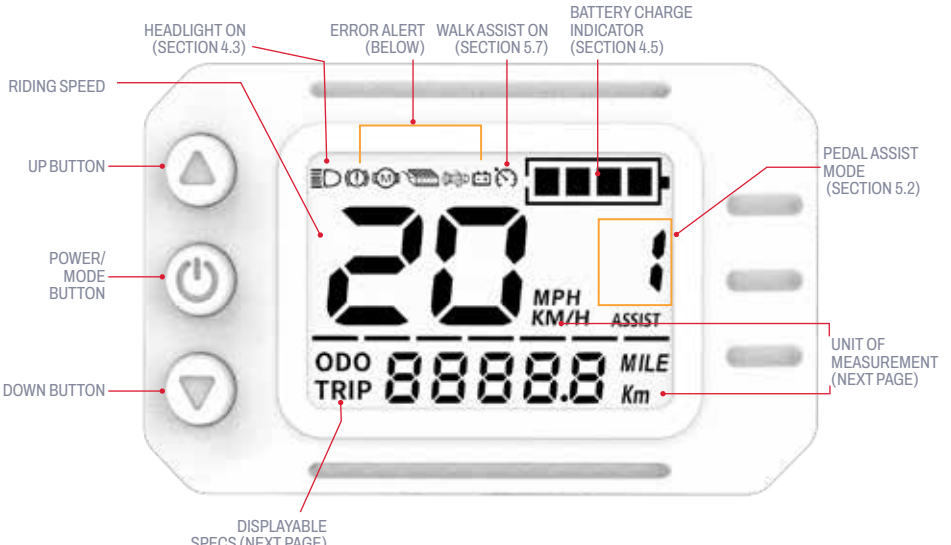

Error Codes:

E06 - E24 (!) (M) ECU

⚠ **CAUTION:** IF AN ERROR CODE APPEARS ON YOUR LCD SCREEN, CONTACT THE JETSON CARE TEAM FOR ASSISTANCE PRIOR TO RIDING YOUR E-BIKE AGAIN.

Changing the Displayed Spec:

QUICK-PRESS THE POWER/MODE BUTTON **("⏻")** TO TOGGLE BETWEEN 7 DIFFERENT DISPLAYS.

1	**ODO**	ODOMETER - TOTAL DISTANCE TRAVELED ON THIS UNIT.
2	**TRP**	TRIP ODOMETER - TOTAL DISTANCE TRAVELED SINCE POWERING ON.
3	**U**	U STATUS - POSSIBLE BATTERY VOLTAGE BASED ON CHARGE LEVEL. THE FULLY CHARGED VOLTAGE LEVEL IS U-54.6. AS THE NUMBER DECREASES, YOUR MAXIMUM SPEED MAY DECREASE TO PRESERVE THE CHARGE OF THE BATTERY.
4	**TI**	TRIP TIME - LENGTH OF TIME (MINUTES AND SECONDS) SINCE POWERING ON.
5	**E**	ERROR STATUS - **E00**: NO ELECTRONIC ISSUES DETECTED. **E06-E24**: ERROR DETECTED. CONTACT THE JETSON CARE TEAM PRIOR TO RIDING AGAIN.
6	**M**	MAXIMUM SPEED - MAXIMUM SPEED TRAVELED SINCE POWERING ON.
7	**A**	AVERAGE SPEED - AVERAGE SPEED TRAVELED SINCE POWERING ON.

NOTE: The trip odometer, trip time, maximum speed, and average speed will reset every time the e-bike is powered off.

Changing the Backlight Brightness:

1. SIMULTANEOUSLY PRESS AND HOLD THE UP **(▲)** AND DOWN **(▼)** BUTTONS FOR 2 - 3 SECONDS TO ENTER THE SETTINGS MENU.
2. IF NECESSARY, QUICK-PRESS THE POWER/MODE BUTTON (⏻) UNTIL **"P01"** IS DISPLAYED ON THE SCREEN.
3. QUICK-PRESS THE UP **(▲)** OR DOWN **(▼)** BUTTON TO CHANGE THE BRIGHTNESS OF THE DISPLAY TO LOW **("1")**, MEDIUM **("2")**, OR HIGH **("3")**.
4. QUICK PRESS THE POWER/MODE (⏻) TO SAVE YOUR SELECTION.
5. SIMULTANEOUSLY PRESS AND HOLD THE UP **(▲)** AND DOWN **(▼)** BUTTONS FOR 2 - 3 SECONDS TO EXIT THE SETTINGS MENU. AFTER 10 SECONDS WITHOUT ACTION, THE DISPLAY WILL AUTOMATICALLY EXIT THE SETTINGS MENU.

Changing the Unit of Measurement:

1. SIMULTANEOUSLY PRESS AND HOLD THE UP **(▲)** AND DOWN **(▼)** BUTTONS FOR 2 - 3 SECONDS TO ENTER THE SETTINGS MENU.
2. QUICK PRESS THE POWER/MODE (⏻) BUTTON UNTIL **"P02"** IS DISPLAYED ON THE SCREEN.
3. QUICK PRESS THE UP **(▲)** OR DOWN **(▼)** BUTTON TO TOGGLE BETWEEN MILES **("1")** AND KILOMETERS **("0")** UNTIL THE DESIRED SETTING IS REACHED.
4. QUICK PRESS THE POWER/MODE (⏻) TO SAVE YOUR SELECTION.
5. SIMULTANEOUSLY PRESS AND HOLD THE UP **(▲)** AND DOWN **(▼)** BUTTONS TO EXIT THE SETTINGS MENU. AFTER 10 SECONDS WITHOUT ACTION, THE DISPLAY WILL AUTOMATICALLY EXIT THE SETTINGS MENU.

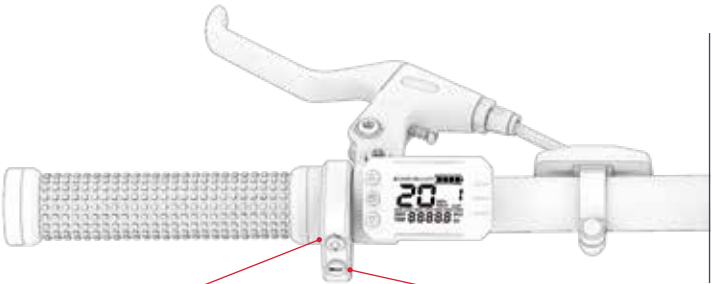

4.3 Using the Headlight

IF RIDING IN LOW LIGHT CONDITIONS, TURN ON THE HEADLIGHT SO YOU CAN BETTER SEE THE ROAD AHEAD AND ONCOMING RIDERS CAN BETTER SEE YOU.

TO TURN ON OR OFF THE HEADLIGHT: QUICK-PRESS THE HEADLIGHT BUTTON. AN ICON WILL ILLUMINATE ON THE LCD SCREEN WHENEVER THE HEADLIGHT IS TURNED ON.

4.4 Sounding the Horn

SOUND THE HORN AS AN ALERT TO OTHER RIDERS AND PEDESTRIANS.

TO SOUND THE HORN: QUICK-PRESS THE HORN BUTTON.

4.5 Checking Battery Charge Level

YOU CAN KEEP TABS ON YOUR BATTERY'S CHARGE LEVEL WITH THE BATTERY INDICATOR ICON ON THE LCD SCREEN.

BATTERY INDICATOR ICON	APPROXIMATE REMAINING CHARGE PERCENTAGE*
	76% - 100%
	51% - 75%
	26% - 50%
	<25% Charge your Jetson NOW!

*Approximation only. May vary based on use.

IMPORTANT: Your bike's ability to reach top speed can be affected by the battery charge level. You may notice a reduction in speed when battery charge dips below 25%.

IMPORTANT: When the battery charge depletes to 0%, the e-bike will power off. Charge to full power (see section 2.8) prior to your next ride.

4.6 Using the Kickstand

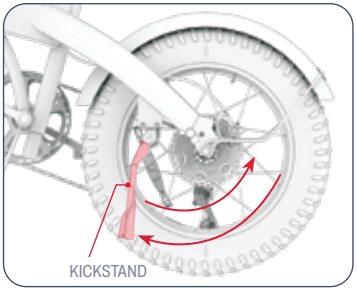

TO USE THE KICKSTAND: PIVOT IT DOWN AND GENTLY TILT YOUR E-BIKE ONTO IT TO STAND.

TO RAISE THE KICKSTAND: PIVOT IT BACK UP.

⚠ **CAUTION:** Always raise the kickstand before riding.

4.7 Removing & Reinserting the Battery

THERE ARE 3 BATTERY AND KEY POSITIONS.

Locked Position:

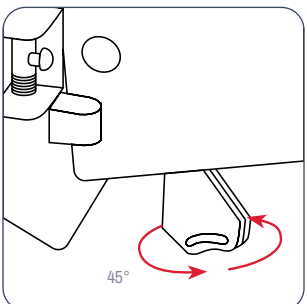

BATTERY: LOCKED IN

KEY: LOCKED IN

THE BATTERY AND THE KEY ARE LOCKED INTO THE FRAME, AND THE KEY WILL REMAIN IN PLACE THERE WHILE YOU RIDE.
FROM HOME POSITION: TURN KEY 45° COUNTERCLOCKWISE.

Home Position:

NOTE: YOUR PRODUCT ARRIVES WITH THE LOCK IN HOME POSITION.

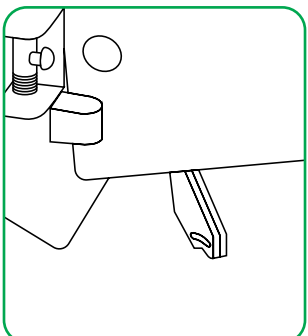

BATTERY: LOCKED IN

KEY: REMOVABLE

THE BATTERY IS LOCKED IN THE FRAME, AND THE KEY CAN BE INSERTED AND REMOVED FROM THE KEYHOLE.

Unlocked Position:

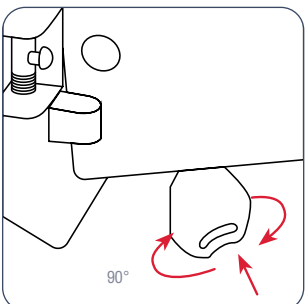

BATTERY: REMOVABLE

KEY: REMOVABLE

THE BATTERY CAN BE REMOVED FROM THE FRAME, AND THE KEY CAN BE INSERTED AND REMOVED FROM THE KEYHOLE.
FROM HOME POSITION: PUSH KEY UP AND TURN CLOCKWISE 90°.

To Remove the Battery:

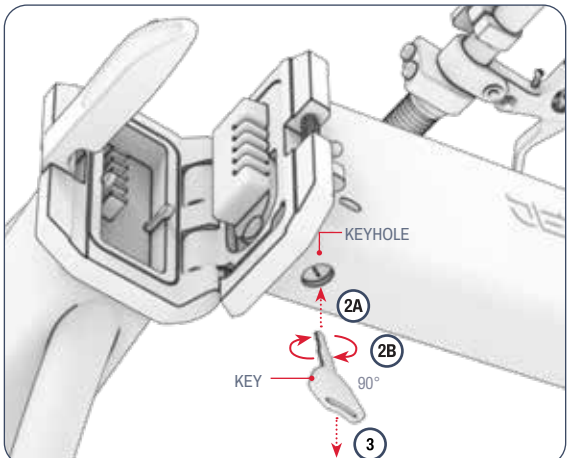

1. FOLD THE FRAME (SECTION 2.3) TO REVEAL THE BATTERY.
2. INSERT ONE KEY INTO THE KEYHOLE. PUSH THE KEY UP (A) AND TURN IT CLOCKWISE 90° DEGREES TO SET THE UNLOCKED POSITION (B).
3. REMOVE THE KEY FROM THE KEYHOLE.

CAUTION: Ensure that that power is off before removing the battery from the frame.

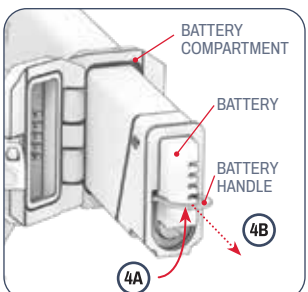

4. PULL THE BATTERY HANDLE UP (A) AND USE THE HANDLE TO PULL THE BATTERY OUT OF THE BATTERY COMPARTMENT (B).

To Reinsert the Battery:

IMPORTANT: To avoid damaging the battery, do not insert it into the frame too quickly or with too much force.

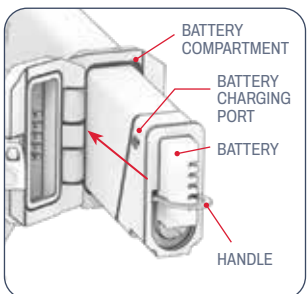

1. WITH THE BATTERY CHARGING PORT ON THE LEFT AND THE HANDLE FACING OUT, SLOWLY PUSH THE BATTERY INTO THE BATTERY COMPARTMENT.

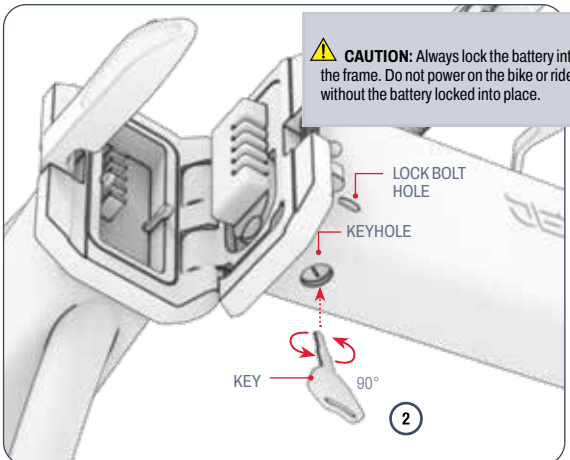

CAUTION: Always lock the battery into the frame. Do not power on the bike or ride it without the battery locked into place.

2. WHILE HOLDING THE BATTERY IN PLACE, INSERT ONE KEY IN THE KEYHOLE.
   - TO SET THE HOME POSITION, IN WHICH THE BATTERY IS LOCKED BUT YOU CAN REMOVE THE KEY, TURN THE KEY COUNTERCLOCKWISE 90° UNTIL THE LOCK BOLT EXTENDS INTO THE LOCK BOLT HOLE. REMOVE THE KEY FROM THE HEYHOLE AND CHECK THAT THE BATTERY IS SECURED INSIDE THE FRAME.
   - TO SET THE LOCKED POSITION, IN WHICH BOTH THE BATTERY AND KEY ARE SECURED, TURN THE KEY COUNTERCLOCKWISE ANOTHER 45° PAST THE HOME POSITION.
3. CHECK THAT THE BATTERY IS SECURED INSIDE THE FRAME.

5. MOVING INSTRUCTIONS.

5.1 Riding Your E-Bike

RIDE YOUR E-BIKE IN 2 DIFFERENT WAYS:

1. WITH ASSISTED PEDALING (SECTION 5.2)
2. LIKE A TRADITIONAL BIKE, WITHOUT ANY HELP FROM THE MOTOR. (SECTION 5.2)
3. USING THE THROTTLE FOR ALL-MOTOR POWER (SECTION 5.4)

5.2 Pedaling With or Without Electronic Pedal Assistance

PEDAL ASSIST LETS YOU GO FURTHER AND FASTER ON LESS EFFORT. THERE ARE 5 LEVELS OF ELECTRONIC PEDAL ASSISTANCE, AND AN OPTION TO RIDE WITHOUT ANY ASSISTANCE AT ALL.

WHEN RIDING WITH PEDAL ASSISTANCE, THE MOTOR WIL DELIVER BOOSTS OF POWER TO SUPPLEMENT YOUR EXERTION AND HELP YOU REACH THE MAXIMUM POSSIBLE SPEED WITHIN THE PEDAL ASSIST LEVEL IN WHICH YOU HAVE THE BIKE SET.

PEDAL ASSIST	LEVEL 0	LEVEL 1	LEVEL 2	LEVEL 3	LEVEL 4	LEVEL 5
ELECTRONIC PEDAL ASSISTANCE WILL BRING THE SPEED TO	NO ELECTRONIC PEDAL ASSISTANCE.	8 MPH (12.9 KM/H)	11 MPH (17.7 KM/H)	14 MPH (22.5 KM/H)	17 MPH (27.4 KM/H)	20 MPH (32.2 KM/H)

YOUR E-BIKE FEATURES CADENCE-BASED PEDAL ASSISTANCE. IN LEVELS 1 THROUGH 5, ANY ROTATIONAL EFFORT THAT YOU PUT INTO THE PEDALS WILL TELL THE MOTOR TO TURN ON—SO YOU CAN WORK YOUR MUSCLES AS LITTLE OR AS MUCH AS YOU'D LIKE.

IF YOUR PEDALING EFFORTS TAKE YOU BEYOND THE SPEED THRESHOLD FOR THE LEVEL IN WHICH YOU HAVE THE BIKE SET, YOU WILL STOP RECEIVING PEDAL ASSISTANCE.

- **TO CHANGE TO A HIGHER PEDAL ASSIST LEVEL:** PUSH THE UP "▲" BUTTON.
- **TO CHANGE TO A LOWER PEDAL ASSIST LEVEL:** PUSH THE DOWN "▼" BUTTON.

5.3 Using the Gears

THIS E-BIKE IS A 7-GEAR BIKE.

LOWER GEARS MAKE FOR EASIER PEDALING BECAUSE THERE IS LESS RESISTANCE, BUT YOU'LL COVER LESS GROUND WITH EACH PEDAL STROKE. USE LOW GEARS FOR RIDING UPHILL, TACKLING ROUGH TERRAIN, OR TO RIDE SLOWLY.

HIGHER GEARS GIVE YOU MORE SPEED, AS YOU'LL COVER MORE GROUND WITH EACH PEDAL STROKE. USE HIGH GEARS FOR FASTER RIDING ON FLAT SURFACES OR WHEN DESCENDING A HILL.

TO DOWNSHIFT TO A LOWER GEAR:
PUSH THE DOWNSHIFT LEVER FORWARD UNTIL THE DESIRED GEAR IS POSITIONED AT THE GEAR INDICATOR MARK.

TO UPSHIFT TO A HIGHER GEAR:
PUSH THE UPSHIFT BUTTON UNTIL THE DESIRED GEAR IS POSITIONED AT THE GEAR INDICATOR MARK.

NOTE:
- You should hear a clicking sound with each successful gear shift.
- Mechanical gears do not affect the ride when bike movement is being controlled by the throttle. Gears only affect the ride during pedaling.

IMPORTANT:
- Only change gears while in forward motion and actively pedaling.

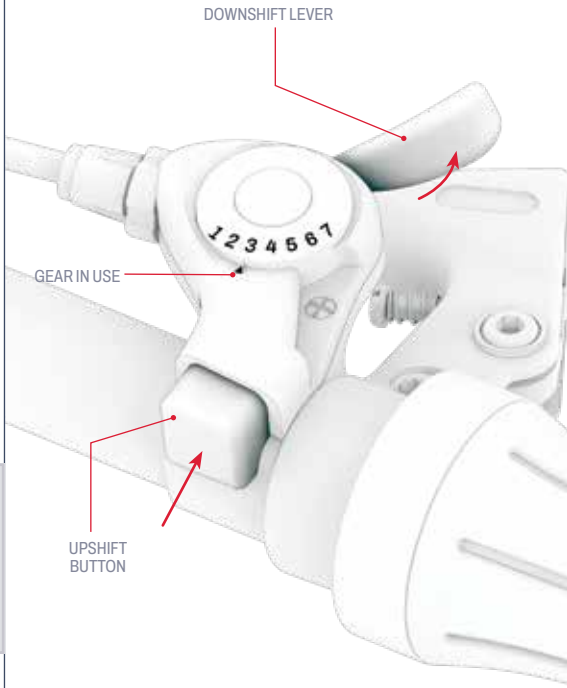

5.4 Using the Throttle

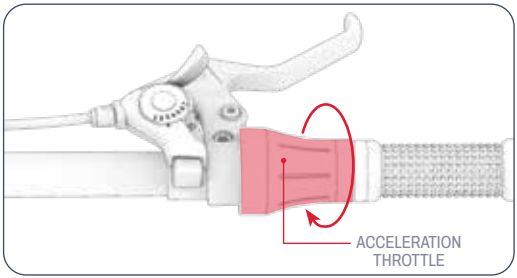

TO RIDE YOUR E-BIKE LIKE A MOTOR BIKE, STOP PEDALING AND USE THE ACCELERATION THROTTLE.

NOTE: THE SPEED AT WHICH YOU TRAVEL WILL NOT BE AFFECTED BY EITHER THE PEDAL ASSIST LEVEL USING ALL MOTOR POWER OR GEAR IN WHICH YOU HAVE THE BIKE SET.

TO ACCELERATE: SLOWLY ROTATE THE ACCELERATION THROTTLE TOWARDS YOU WITH YOUR RIGHT HAND.

- THE MORE YOU ROTATE THE THROTTLE, THE MORE THE MOTOR WILL ENGAGE — AND THE FASTER YOU WILL TRAVEL.
- TO AVOID SUDDEN BURSTS OF SPEED, ALWAYS ROTATE THE THROTTLE GRADUALLY.

TO SLOW DOWN: GENTLY EASE UP ON THE THROTTLE.

⚠ **CAUTION:** To avoid injury, always rest your feet on the pedals, even when you are not pedaling. Never ride with them dangling off the side of the bike.

5.5 Using the Brakes

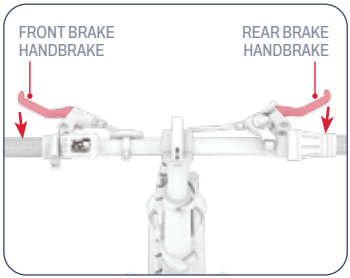

- SQUEEZE ONE OR BOTH HANDBRAKES TO SLOW DOWN.
- SQUEEZE MORE FORCEFULLY TO COME TO A COMPLETE STOP.
- TO AVOID ABRUPT MOVEMENTS, TRY TO SQUEEZE THE HANDBRAKE(S) GRADUALLY.

· LEFT HANDBRAKE ➔ FRONT WHEEL BRAKE
· RIGHT HANDBRAKE ➔ REAR WHEEL BRAKE

5.6 Using Electronic Walk Assistance

IN WALK ASSIST MODE, THE MOTOR WILL PROPEL THE BIKE FORWARD AT 3.0 MPH (4.8 KPH) TO MAKE FOR EASIER TRANSPORT WHEN YOU ARE NOT RIDING IT. USE THE HANDLEBARS TO GUIDE THE BIKE WHILE USING WALK ASSISTANCE.

TO TURN ON ELECTRONIC WALK ASSISTANCE: PRESS AND HOLD THE DOWN "▼" BUTTON. AFTER 3 SECONDS, WALK ASSIST WILL ACTIVATE.

CONTINUE TO HOLD THE DOWN BUTTON FOR AS LONG AS YOU NEED ELECTRONIC WALK ASSISTANCE. YOU WILL SEE THE WALK ASSIST ICON APPEAR ON THE LCD SCREEN.

TO TURN OFF ELECTRONIC WALK ASSISTANCE: RELEASE THE DOWN "▼" BUTTON.

5.7 Helmet Safety

A HELMET SHOULD BE WORN BY THE RIDER AT ALL TIMES.



IMPROPER POSITIONING:
THE FOREHEAD IS EXPOSED.
A FALL COULD RESULT
IN SERIOUS INJURY.



PROPER POSITIONING:
THE FOREHEAD IS COVERED
BY THE HELMET.

**WEAR A HELMET, APPROPRIATE CLOTHING, SHOES, AND SAFETY GEAR. AVOID CLOTHING THAT CAN GET CAUGHT INTO OR UNDER THE WHEELS. CLOSED-TOE, FLAT SHOES ARE RECOMMENDED. WEAR AN ASTM F1492 APPROVED HELMET AND PROTECTIVE GEAR TO PREVENT INJURY IN THE EVENT OF AN ACCIDENT.*

5.8 Maximizing Speed & Riding Range

IN IDEAL CONDITIONS, THE MAXIMUM MILEAGE THAT CAN BE ACHIEVED PER FULLY CHARGED BATTERY IS 37.0 MILES (59.5 KM) IF EXCLUSIVELY USING ELECTRONIC PEDAL ASSISTANCE, OR 27.0 MILES (43.5 KM) IF EXCLUSIVELY USING THE THROTTLE. THE MAXIMUM SPEED IS 20 MPH (32.2 KM/H). THE HARDER THE MOTOR NEEDS TO WORK, THE FASTER YOUR BATTERY WILL DRAIN. THE FOLLOWING FACTORS WILL ALSO AFFECT SPEED AND RIDING RANGE.

Riding Surface:
TRAVELING OVER A ROUGH SURFACE REQUIRES MOTOR POWER THAN RIDING ON A SMOOTH ONE.

Carrying Weight:
MORE WEIGHT (RIDER PLUS CARGO) DECREASES ACHIEVABLE RANGE.

Riding Style:
- FREQUENT STARTING AND STOPPING WILL REDUCE RIDING RANGE.
- USING THE THROTTLE DRAINS THE BATTERY FASTER THAN PEDAL ASSIST.
- USING YOUR OWN EFFORT TO PEDAL WILL EASE THE DEMAND ON THE MOTOR AND INCREASE YOUR RIDING RANGE.

Air Temperature:
THE IDEAL TEMPERATURE FOR RIDING AND STORING THE E-BIKE IS BETWEEN 32°F - 104°F (0°C - 40°C).

Incline:
THE MOTOR HAS TO WORK HARDER TRAVELING UPHILL THAN ON FLAT STRETCHES OR DOWNHILL.

Battery Maintenance:
TIMELY BATTERY CHARGING AFTER EVERY RIDE HELPS MAINTAIN BATTERY CAPACITY AND STRENGTH.

Use of Gears:
USING THE GEARS TO MAXIMIZE YOUR PEDALING EFFORTS MAKES FOR MORE EFFICIENT USE OF PEDAL ASSIST, SO YOU CAN ACHIEVE MORE MILEAGE BEFORE THE BATTERY DEPLETES.

Tire Inflation:
INFLATING THE TIRES TO THE RECOMMENDED PRESSURE WILL HELP ACHIEVE MAXIMUM RIDING SPEED AND RANGE.

USER MAINTENANCE INSTRUCTIONS.

Take good care of your Jetson to keep it riding smoothly and safely. Here's how:

Handling Your Jetson:

- AVOID EXPOSING YOUR PRODUCT TO SEVERE VIBRATION OR INTENSE PHYSICAL IMPACT.
- NEVER DISASSEMBLE THE BATTERY.
- KEEP YOUR PRODUCT AWAY FROM WATER AND MOISTURE.
- RIDE ON SMOOTH, FLAT SURFACES TO AVOID BREAKAGE.
- NEVER CARRY YOUR PRODUCT BY THE WHEELS, SEAT, AND/OR HANDLEBAR.
- TAKE CARE NOT TO PULL OR SNAG THE WIRING CONNECTING THE MOTOR WITH THE HANDLEBAR COMPONENTS.

Storage Instructions:

- FULLY CHARGE THE BATTERY BEFORE STORING THE PRODUCT FOR EXTENDED PERIODS OF TIME.
- WHEN IN STORAGE FOR EXTENDED PERIODS OF TIME, FULLY CHARGE THE BATTERY ONCE A MONTH.
- COVER THE PRODUCT TO PROTECT IT AGAINST DUST.
- STORE THE PRODUCT INDOORS AND IN A DRY PLACE AT A TEMPERATURE BETWEEN 32°F - 104°F (0°C - 40°C).

Cleaning Your Jetson:

- SEAT AND FRAME - WIPE WITH A DAMP DUST-FREE CLOTH OR ONE DIPPED IN RUBBING ALCOHOL. FOLLOW WITH A DRY DUST-FREE CLOTH.
- HANDLEBAR - WIPE DOWN WITH MILD SOAP USING A DAMP DUST-FREE CLOTH. REMOVE EXCESS SOAP WITH A SEPARATE DAMP CLOTH.
- WHEEL COMPONENTS - WIPE WITH A DAMP DUST-FREE CLOTH.
- TIRES - WIPE WITH A DAMP DUST-FREE CLOTH. A TIRE FINISHER OR CLEANER CAN ALSO BE USED.

⚠ **WARNING:** Do not spray or apply water directly onto to the product. Water can cause damage to the wiring, battery compartment, and lights, as well as deterioration of the frame—all of which could cause a malfunction that puts rider safety at risk.

⚠ Battery Precautions:

YOUR PRODUCT HAS A REMOVABLE LITHIUM-ION BATTERY. TAKE CARE WHEN HANDLING.

- KEEP PRODUCT AND BATTERY AWAY FROM FIRE AND EXCESSIVE HEAT.
- AVOID INTENSE PHYSICAL SHOCK, SEVERE VIBRATION, OR IMPACT.
- PROTECT PRODUCT AND BATTERY FROM WATER OR MOISTURE.
- DO NOT PLACE OR STORE PRODUCT OR BATTERY IN A PILE ON TOP OF OR UNDERNEATH OTHER OBJECTS.
- DO NOT DISASSEMBLE THE BATTERY.
- DO NOT DISPOSE OF PRODUCT OR BATTERY WITH EVERYDAY TRASH. BRING PRODUCT TO A DEDICATED E-WASTE FACILITY OR BATTERY RECYCLING CENTER. FOR MORE INFORMATION ON DISPOSAL SITES NEAR YOU, CONTACT YOUR LOCAL MUNICIPALITY OR WASTE HAULER.
- SHOULD THE PRODUCT'S BATTERY FEEL HOT OR EXHIBIT SIGNS OF OVERHEATING, EMIT AN ODOR OR UNUSUAL SOUND, LEAK FLUID OR GAS, OR CHANGE IN SHAPE OR COLOR, IMMEDIATELY:
  1. IF IN USE, STOP USING THE PRODUCT IMMEDIATELY. REMOVE THE CHARGING CABLE FROM THE PRODUCT IF IT IS PLUGGED IN.
  2. DISCONTINUE USE OF THE PRODUCT.
  3. IF SAFE TO DO SO, MOVE THE PRODUCT AND BATTERY INTO A CLEAR SPACE AND AWAY FROM ANYTHING FLAMMABLE.
  4. CALL YOUR LOCAL EMERGENCY SERVICES FOR ASSISTANCE.
  5. THOROUGHLY WASH EYES OR AREAS OF SKIN THAT HAVE COME IN CONTACT WITH LEAKING BATTERY ELECTROLYTE FLUID WITH CLEAN RUNNING WATER AND SEEK ADDITIONAL MEDICAL ATTENTION.
- IF THERE ARE ANY ISSUES WITH THE BATTERY, CONTACT THE JETSON CARE TEAM.

CONNECT WITH US.

RIDEJETSON.COM/SUPPORT
RIDEJETSON.COM/CHAT

1-844-585-7462

Be sure to follow @ridejetson on social media to learn about fantastic offers, giveaways, and all the latest Jetson news.

LOVING YOUR RIDE?

Leave a review at
ridejetson.com/reviews.
We can't wait to hear from you!
#MakeMoves




JETSON