A GUIDE FOR YOUR RIDE.

IMPORTANT:
Read carefully and retain for future reference.

JETSON

VOLT X
Electric Go-Kart.

MODEL SKU(S): JVOLTX-BLK

OUR TOP TWO RIDING RULES:

BE SAFE.
HAVE FUN!



MANUFACTURED IN YUEYANG, CHINA
IMPORTED BY TRURIDE TECH LLC.
PO BOX 461, JERSEY CITY, NJ 07302-9998

DATE CODE: 10/2025
DOCUMENT EDITION: V2.0
MADE IN CHINA

© 2025, TRURIDE TECH. ALL RIGHTS RESERVED. MANUFACTURED FOR TRURIDE TECH LLC.
JETSON® IS A REGISTERED TRADEMARK USED UNDER LICENSE FROM JETSTREAM BRANDS LLC.
NO PORTION OF THIS DOCUMENT, INCLUDING SHAPE, GRAPHICS, AND DESIGN, MAY BE REPRODUCED OR TRANSMITTED IN ANY FORM OR BY ANY MEANS.



Contents

Safety Warnings 4
Warranty Coverage & Product Registration 7
1. About Your Product
1.1 What's in the Box 8
1.2 Product Overview 10
1.3 Product Specs 12
1.4 Online Resources 12
2. Getting Started
2.1 Starting Notes 13
2.2 Adjusting the Frame Length 14
2.3 Assembling the Front Axle 16
2.4 Installing the Front Fork 19
2.5 Installing the Front Guard 21
2.6 Assembling the Steering System 25
2.7 Attaching the Rear Wheels 31
2.8 Attaching the Front Wheels 37
2.9 Installing the Seat 41
2.10 Connecting the Battery 43
2.11 Assembling & Attaching the Spoiler and Battery Compartment Cover 44
2.12 Charging the Battery 49
3. Safe Journeying
3.1 Pre-Ride Safety Checks 51
3.2 Helmet Positioning 51
3.3 Fastening the Seat Belt 52
4. Making Moves
4.1 Powering On & Off 53
4.2 Riding 54
4.3 Changing Riding Modes 55
4.4 Changing Speed 56
4.5 Changing Direction 57
4.6 Using Lights & Sounds 58
4.7 Checking Battery Charge Level 59
4.8 Maximizing Speed & Run Time 60
User Maintenance Instructions 61
Connect with Us 63

SAFETY WARNINGS.

KEEP THESE INSTRUCTIONS.

INSTRUCTIONS ON THE RISK OF FIRE OR INJURY TO PERSONS AND IMPORTANT SAFETY INSTRUCTIONS

- Before use, please read the user manual and safety warnings carefully, and make sure you understand and accept all the safety instructions. The user will be responsible for any loss or damage caused by improper use.
- **Failure to use correct charger can result in fire and explosion, resulting in property damage, injury, and death.**
- Before each cycle of operation, the operator shall perform the preoperation checks specified by the manufacturer: That all guards and pads originally supplied by the manufacturer are in proper place and in serviceable condition; That the braking system is functioning properly; That any and all axle guards, chain guards, or other covers or guards supplied by the manufacturer are in place and in serviceable condition; That tires are in good condition, inflated properly, and have sufficient tread remaining; The area that the product is to be operated should be safe and suitable for safe operation.
- Components shall be maintained and repaired in accordance with the manufacturer's specifications and using only the manufacturer's authorized replacement parts with installation performed by dealers or other skilled persons.
- Warning against recharging non-rechargeable batteries.
- Don't allow hands, feet, hair, body parts, clothing, or similar articles to come in contact with moving parts, wheels, or drive train, while the motor is running.
- This product should not be used by children or persons with reduced physical, sensory or mental capabilities, or lack of experience and knowledge, unless they have been given supervision or instruction (IEC 60335-1/ A2:2006).
- Unsupervised children should not play with the product (IEC 60335-1/A2:2006).
- Adult supervision is required.
- Units shall not be operated to perform racing, stunt riding, or other maneuvers, which may cause loss of control, or may cause uncontrolled operator/passenger actions or reactions.
- Never use near motor vehicles.
- Avoid sharp bumps, drainage grates, and sudden surface changes. Scooter may suddenly stop.
- Avoid streets and surfaces with water, sand, gravel, dirt, leaves, and other debris. Wet weather impairs traction, braking, and visibility.
- Avoid riding around flammable gas, steam, liquid, or dust that could cause fire.
- Operators shall adhere to all of the manufacturer's recommendations and instructions, as well as comply with all laws and ordinances: Units without headlights shall be operated only with adequate daylight conditions of visibility, and; Owners shall be encouraged to highlight (for conspicuity) using lighting, reflectors, and for low-riding units, signal flags on flexible poles.
- Persons with the following conditions shall be cautioned not to operate: Those with heart conditions; Pregnant women; Persons with head, back, or neck ailments, or prior surgeries to those areas of the body; and persons with any mental or physical conditions that may make them susceptible to injury or impair their physical dexterity or mental capabilities to recognize, understand, and perform all of the safety instructions and to be able to assume the hazards inherent in unit use.
- Do not ride at night.

- Do not ride after drinking or taking prescription medication.
- Do not carry items when riding.
- Never operate the product barefooted.
- Always wear shoes and keep shoelaces tied.
- Make sure your feet are always placed securely on the deck.
- Operators always shall use appropriate protective clothing, including but not limited to a helmet, with appropriate certification, and any other equipment recommended by the manufacturer: Always wear protective equipment such as helmet, knee pads, and elbow pads.
- Always give way to pedestrians.
- Be alert to things in front and far away from you.
- Do not allow distractions when riding, such as answering the phone or engaging in any other activities.
- The product cannot be ridden by more than one person.
- When you ride the product along with other riders, always keep a safe distance to avoid a collision.
- When turning, be sure to maintain your balance.
- Riding with improperly adjusted brakes is dangerous and can result in serious injury or death.
- The brake may become hot while operating, do not touch the brake with your bare skin.
- Applying brakes too hard or too suddenly can lock up a wheel, which could cause you to lose control and fall. Sudden or excessive application of the brake may result in injury or death.
- If the brake loosens, please adjust with a hexagon wrench, screwdriver, or other applicable tool, or please contact the Jetson Care Team.
- Replace worn or broken parts immediately.
- Check whether all safety labels are in place and understood before riding.
- The owner shall allow the use and operation of the unit after a demonstration that such operators can understand and operate all components of the unit before use.
- Do not ride without proper training. Do not ride at high speeds, on uneven terrain, or on slopes. Do not perform stunts or turn abruptly.
- Recommended for indoor use.
- Prolonged exposure to UV rays, rain and the elements may damage the enclosure materials, store indoors when not in use.
- Personal e-mobility devices are not intended for use at high-altitude locations requiring increased clearance between electrical wires in electrical circuits, indicate that they are not intended for use at altitudes above 2,000 meters above sea level.
- Only use the battery(ies) specified by the manufacturer
- STORE INDOORS WHEN NOT IN USE. LEAVE INDOORS WHILE CHARGING OR WHEN NOT IN USE FOR DRIVING.
- **AVERTISSEMENT** - Risque d'incendie - Aucune des pieces ne peut être réparée par l'utilisateur.
- **WARNING** - Risk of Fire and Electric Shock - No User Serviceable Parts.
- Caution: Risk of Fire
- The rider should not exceed 150 lb | 68.04 kg.

MODIFICATIONS

Do not attempt to disassemble, modify, repair, or replace the unit or any components of the unit without instruction from the Jetson Care Team. This will void any warranty, and can lead to malfunctions which may cause injury.

ADDITIONAL OPERATION PRECAUTIONS

Do not lift the product off the ground while it is on and the wheels are in motion. This can result in freely spinning wheels, which may cause injury to yourself or others nearby. Do not jump on or off the product, and do not jump while using it. Always keep your feet firmly planted on the foot rest while in operation. Always check the battery charge before using.

DISPOSAL OF USED BATTERY



Battery may contain hazardous substances which could endanger the environment and human health. This symbol marked on the battery and/or packaging indicates that used battery shall not be treated as municipal waste. Batteries should be disposed of at an appropriate collection point for recycling. By ensuring the used batteries are disposed of correctly, you will help preventing potential negative consequences for the environment and human health. The recycling of materials will help to conserve natural resources. For more information about recycling of used batteries, please contact your local municipality waste disposal service.

NOTICE OF COMPLIANCE

This device complies with Part 15 of the FCC Rules. Operation is subject to the following two conditions: (1) this device may not cause harmful interference, and (2) this device must accept any interference received, including interference that may cause undesired operation. Warning: Changes or modifications to this unit not expressly approved by the party responsible for compliance could void the user's authority to operate the equipment.

NOTE: This equipment has been tested and found to comply with the limits for a Class B digital device, pursuant to Part 15 of the FCC Rules. These limits are designed to provide reasonable protection against harmful interference in a residential installation. This equipment generates, uses and can radiate radio frequency energy and, if not installed and used in accordance with the instructions, may cause harmful interference to radio communications. However, there is no guarantee that interference will not occur in a particular installation. If this equipment does cause harmful interference to radio or television reception, which can be determined by turning the equipment off and on, the user is encouraged to try to correct the interference by one or more of the following measures:

- Reorient or relocate the receiving antenna.
- Increase the separation between the equipment and receiver.
- Connect the equipment into an outlet on a circuit different from that to which the receiver is connected.
- Consult the dealer or an experienced radio/TV technician for help.
- Shielded cables must be used with this unit to ensure compliance with the Class B FCC limits.

⚠ WARNING:

Failure to comply with the following instructions may result in injury to the child or others.

- Keep small parts away from children during assembly.
- Accessory must be assembled and removed by an adult.
- Frequently inspect the product for damage.

*** ADULT ASSEMBLY IS REQUIRED.**

⚠ WARNING:

To reducte the risk of injury, adult supervision is required. Never use in roadways, near motor vehicles, on or near steep inclines or steps, swimming pools or other bodies of water; always wear shoes, and never allow more than 1 rider.

⚠ WARNING:

Always observe basic precautions when using this product, including the following:

(A) Read all instructions before using the product.

(B) To reduce risk of injury, strict supervision is essential when the product is used in closer to children.

(C) Do not insert fingers or hands into the product.

(D) Do not use this product if the elastic power cable or output cable is crunched, has breaked insulation, or has any other indications of damage.

(E) For all equipment. Instructions should state: This appliance is not intended for use in ambient temperatures below 14°F (-10°C) or above an ambient temperature of 104°F (40°C).

(F) For all devices, the instructions should include the information:
The battery is designed to be charged when the ambient temperature is between 32°F (0°C) and 104°F (40°C). Never charge the battery when the ambient temperature is outside this range.

CALIFORNIA PROPOSITION 65

⚠ WARNING:

THIS PRODUCT CAN EXPOSE YOU TO CHEMICALS INCLUDING CADMIUM, WHICH IS KNOWN TO THE STATE OF CALIFORNIA TO CAUSE CANCER AND BIRTH DEFECTS OR OTHER REPRODUCTIVE HARM.
FOR MORE INFORMATION GO TO:
WWW.P65WARNINGS.CA.GOV.

GENERAL LIMITED WARRANTY

YOUR NEW JETSON PRODUCT IS WARRANTED AGAINST DEFECTS IN MATERIALS AND WORKMANSHIP AS INDICATED ON RIDEJETSON.COM/WARRANTY FOR A PERIOD OF TIME FROM THE DATE OF ORIGINAL RETAIL PURCHASE WHEN USED IN ACCORDANCE WITH JETSON'S USER MANUALS (REFER TO RIDEJETSON.COM/SUPPORT). **UNDER THIS WARRANTY, YOU WILL BE ABLE TO DIRECT YOUR CLAIMS TO JETSON EVEN IN SITUATIONS WHERE YOU PURCHASED THE JETSON PRODUCT FROM ONE OF OUR AUTHORIZED RETAILERS.** TO READ THE FULL TERMS OF OUR WARRANTY, VISIT RIDEJETSON.COM/WARRANTY.

PRODUCT REGISTRATION

REGISTER YOUR NEW JETSON TO FAST-TRACK YOU TOWARDS PERSONALIZED PRODUCT AND WARRANTY SUPPORT. MAKE YOUR MOVE AT RIDEJETSON.COM/PRODUCT-REGISTRATION.

WARRANTY COVERAGE & PRODUCT REGISTRATION.

To exercise your product's warranty or inquire about warranty coverage, contact us directly.

www.ridejetson.com

1. ABOUT YOUR PRODUCT.

1.1 What's in the Box

TOOLS AND HARDWARE INCLUDED FOR ASSEMBLY:

S1



M4 × 12MM SCREW (×2)

S2



M4 × 16MM SCREW (×5)

NOTE: ADDITIONAL HARDWARE FOR ASSEMBLY HAS BEEN PRE-INSTALLED ON SOME GO-KART PIECES. REFER TO ASSEMBLY INSTRUCTIONS FOR DETAILS.



SOCKET WRENCH (×2)



PHILLIPS-HEAD SCREWDRIVER

PRODUCT COMPONENTS:

A. FRAME
B. FRONT FORK
C. FRONT GUARD
D. FRONT GUARD ATTACHMENT RING
E. STEERING ROD
F. STEERING WHEEL
G. REAR AXLE
H. REAR WHEEL (×2)
I. REAR HUBCAB (×2)
J. FRONT WHEEL (×2)
K. FRONT HUBCAP (×2)
L. SEAT WITH SEAT BELT
M. BATTERY COMPARTMENT COVER
N. SPOILER

A



B

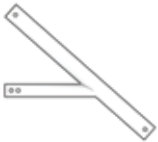

C



D



E



F



G

H



(×2)

I



(×2)

J



(×2)

K



(×2)

L



M



N



1.2 Product Overview

1. STEERING WHEEL
   1A. HORN BUTTON
   1B. BATTERY CHARGE INDICATOR SCREEN
2. POWER BUTTON
3. LIGHT SWITCH
4. SPEED SWITCH
5. RIDING MODE SWITCH
6. ACCELERATOR PEDAL
7. BRAKE PEDAL
8. HEADLIGHT (×2; LEFT AND RIGHT)
9. FRONT WHEEL (×2; LEFT AND RIGHT)
10. FRAME ADJUSTMENT KNOB
    (×2; LEFT AND RIGHT)
11. FRAME
12. REAR WHEEL (×2; LEFT AND RIGHT)
13. BATTERY COMPARTMENT
14. CHARGING PORT WITH COVER
    14A. CHARGING PORT
    14B. CHARGING PORT COVER
15. SEAT BELT
16. DIRECTION SWITCH
17. SEAT
18. SPOILER
19. REAR LIGHT
20. CHARGER

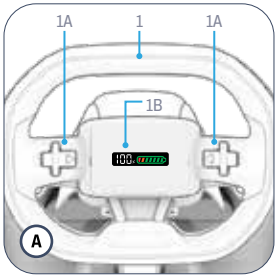

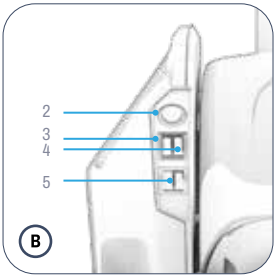

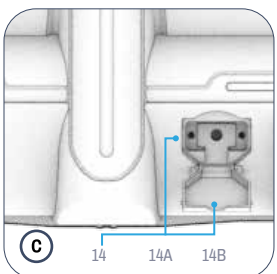



NOTE: IMAGES MAY NOT REFLECT EXACT APPEARANCE OF ACTUAL PRODUCT.

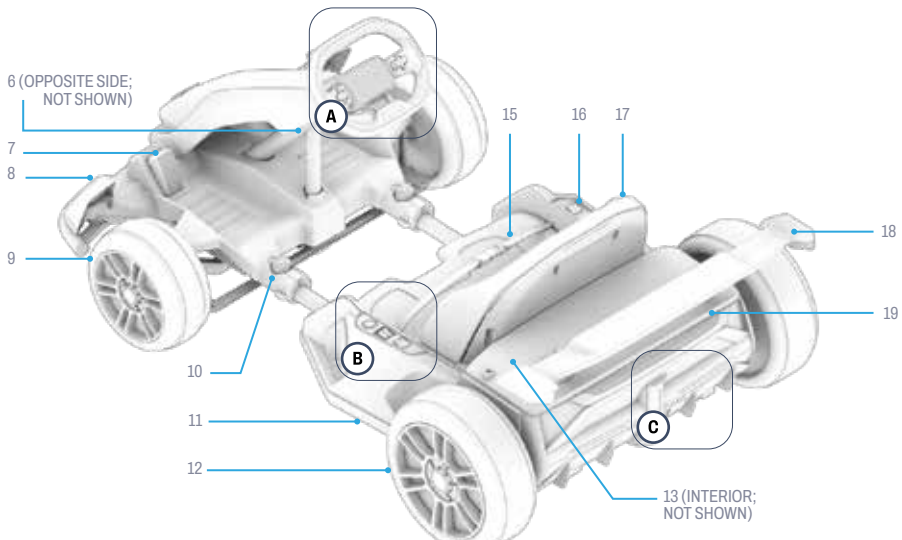
6 (OPPOSITE SIDE; NOT SHOWN)
7
8
9
10
11
12
A
B
C
15
16
17
18
19
13 (INTERIOR; NOT SHOWN)

1.3 Product Specs

- SPEED:
  UP TO 14 MPH (FOR RIDER WEIGHT UP TO 120 LB)*
  UP TO 7 MPH (FOR RIDER WEIGHT 120 - 150 LB)*
- RUN TIME:
  UP TO 60 MINS (LOW SPEED)*, **
  UP TO 30 MINUTES (MIDDLE SPEED)*, **
  UP TO 25 MINUTES (HIGH SPEED)*, **
- BATTERY: 24V, 7.0AH
- PRODUCT WEIGHT: 56.2 LB
- PRODUCT DIMENSIONS: 44.0-48.0" (L) × 29.9" (W) × 21.0" (H)
- WHEEL SIZE: 9.8" (FRONT) | 11.0" (REAR)
- CHARGER: UL LISTED, 100-240V
- CHARGING TIME: UP TO 4 HOURS
- WEIGHT LIMIT: 150 LB
- RECOMMENDED AGE: 10+

** PRODUCT RUN TIME, SPEED, BATTERY LIFE, AND OTHER SPECIFICATIONS MAY VARY BASED ON RIDER AND RIDING CONDITIONS. SEE SECTION 4.8 FOR MORE DETAILS ON CONDITIONS THAT CAN AFFECT PERFORMANCE.*

***WHEN TESTED CARRYING 110 LB, AT AVERAGE SPEEDS OF 4MPH, 7MPH, AND 11 MPH RESPECTIVELY.*

1.4 Online Resources

Scan for our most updated product onboarding materials and support resources.

Find our collection of user manuals at https://ridejetson.com/pages/product-manuals

2. GETTING STARTED.

2.1 Starting Notes

- KICK OFF YOUR ADVENTURE RIGHT: PRIOR TO USE OF THIS PRODUCT, CAREFULLY READ THE ENTIRE USER MANUAL, INCLUDING SAFETY WARNINGS. MAKE SURE YOU UNDERSTAND, ACCEPT, AND ADHERE TO ALL:
  - MANUFACTURER'S RECOMMENDATIONS.
  - SAFETY INSTRUCTIONS AND WARNINGS.
  - LOCAL RIDING AND OPERATIONAL LAWS AND ORDINANCES.

- REMOVE ALL PACKAGING BEFORE BEGINNING ASSEMBLY *.

- THE DIRECTIONS GIVEN IN THIS MANUAL—RIGHT, LEFT, FRONT/FORWARD, AND REAR/BACK—ARE ORIENTED AS THE RIDER WOULD SEE THEM WHEN SEATED IN THE GO-KART. THE "RIGHT SIDE" OF THE GO-KART, FOR EXAMPLE, IS THE SIDE WHERE THE RIDER'S RIGHT HAND AND FOOT WILL BE.

- IT IS HELPFUL TO HAVE AN EXTRA SET OF HANDS TO HELP WITH ASSEMBLY. GRAB AN ASSISTANT!

*ADULT ASSEMBLY REQUIRED.

2.2 Adjusting the Frame Length (necessary prior to assembly)

IMPORTANT: For assembly, the frame must be opened up to the longest setting. Once assembled, the frame length can be adjusted to suit the size and comfort of the rider.

1. LOOSEN AND REMOVE BOTH KNOBS FROM THE FRAME (A) BY TWISTING THEM OUT COUNTERCLOCKWISE.

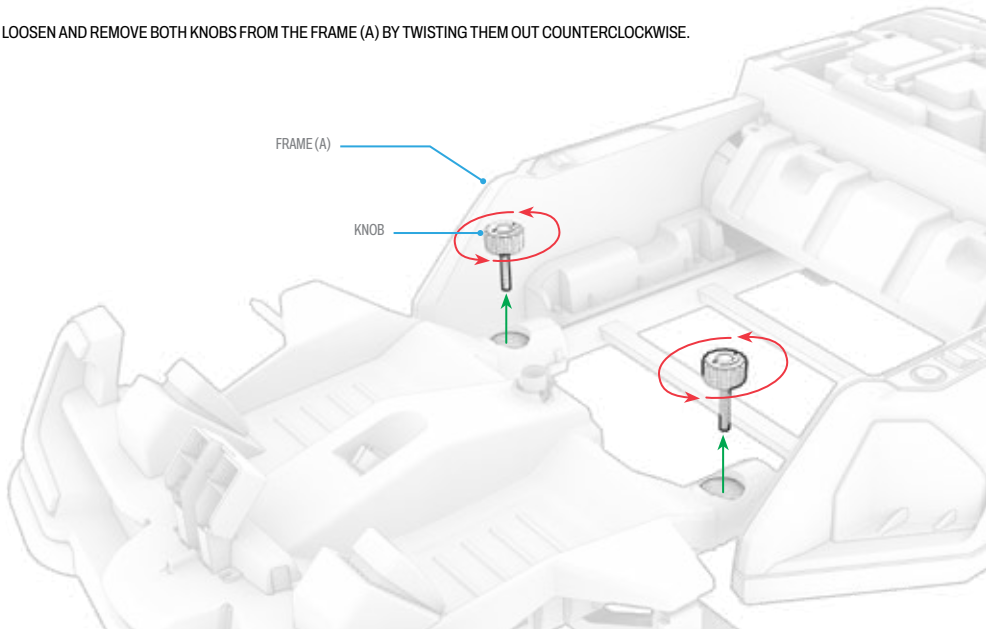

2. PULL THE FRONT FRAME FROM THE REAR FRAME UNTIL KNOB HOLES ARE ALIGNED WITH THE LAST OF FOUR HOLES IN BOTH FRAME CONNECTOR BARS.
3. FROM THE TOP, INSERT 1 KNOB INTO EACH SET OF ALIGNED HOLES BY TWISTING IT IN CLOCKWISE. CONTINUE TURNING BOTH KNOBS UNTIL THE TIPS EMERGE ON THE UNDERSIDE OF THE CONNECTOR BAR AND THE KNOBS ARE TIGHT.
4. CHECK THAT THE FRAME IS SECURE.

NOTE: After completing assembly, set the frame to the desired length by removing the knobs, shortening or lengthening the frame, and reinserting the knobs into the desired set of aligned holes on the frame connector bars.

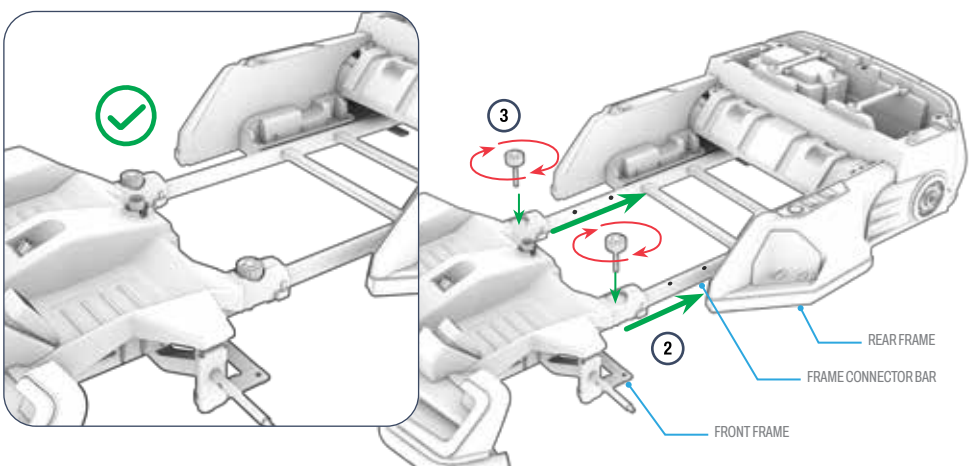

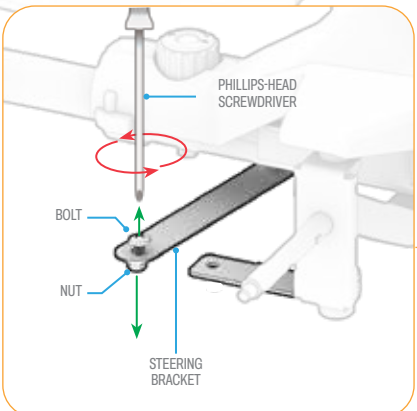

2.3 Assembling the Front Axle

YOU WILL NEED THE PHILLIPS-HEAD SCREWDRIVER.

1. HOLD THE PRE-INSTALLED NUT(SIZE M6) ON THE STEERING BRACKET STEADY. LOOSEN AND REMOVE THE PRE-INSTALLED BOLT (SIZE M6 X 13MM) BY TWISTING IT OUT COUNTERCLOCKWISE WITH THE PHILLPS-HEAD SCREWDRIVER. SET THE BOLT AND NUT ASIDE.

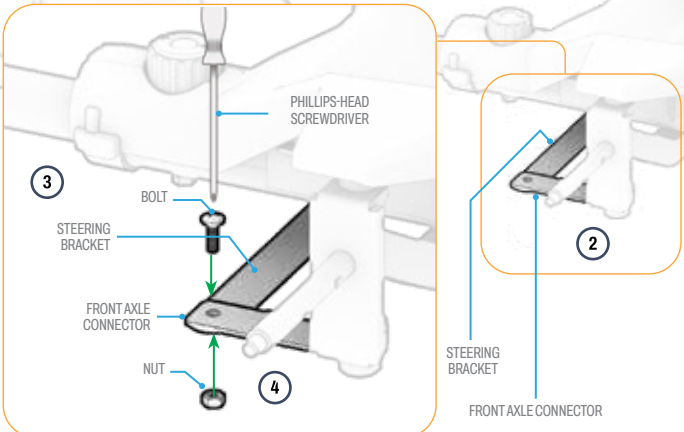

2. ON THE RIGHT SIDE OF THE GO-KART, ADJUST THE STEERING BRACKET AND FRONT AXLE CONNECTOR UNTIL THE TIP OF THE STEERING BRACKET IS UNDER THE TIP OF THE FRONT AXLE CONNECTOR, AND THE HOLES IN THE TWO PIECES ARE ALIGNED.
3. FROM THE TOP, INSERT THE BOLT THROUGH THE SET OF ALIGNED HOLES UNTIL THE TIP EMERGES ON THE UNDERSIDE.
4. TWIST THE NUT CLOCKWISE ONTO THE TIP OF THE BOLT. HOLD THE NUT STEADY WHILE YOU TIGHTEN THE BOLT INTO IT BY TURNING THE BOLT CLOCKWISE WITH THE PHILLIPS-HEAD SCREWDRIVER.

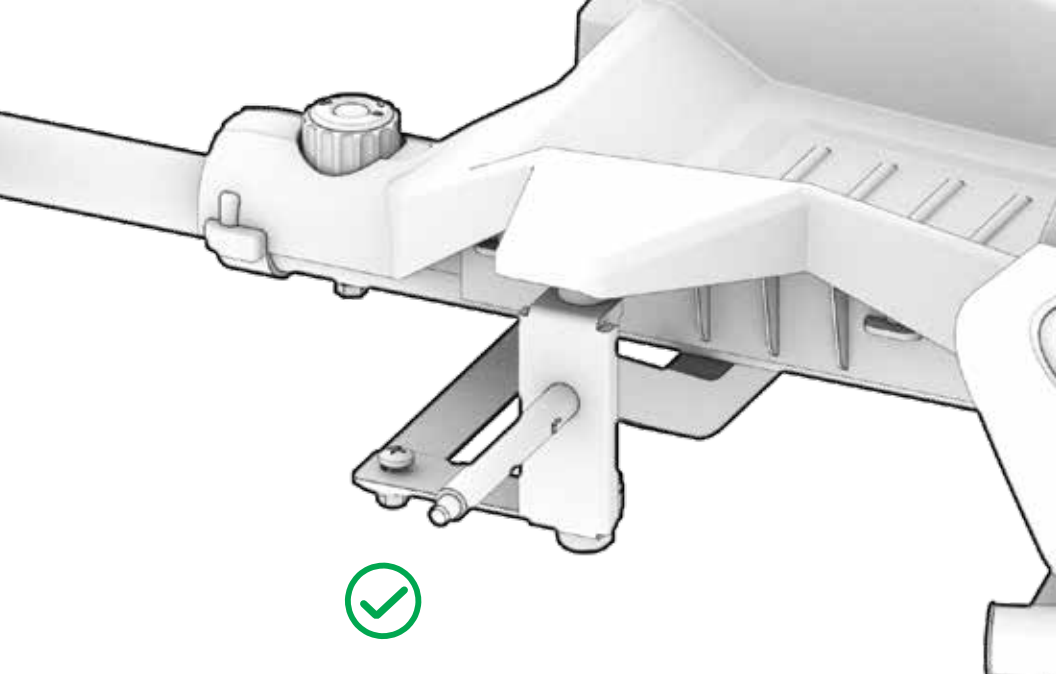

5. CHECK THAT THE CONNECTION IS SECURE.

2.4 Installing the Front Fork

YOU WILL NEED THE PHILLIPS-HEAD SCREWDRIVER.

1. HOLD THE PRE-INSTALLED NUT(SIZE M5) ON THE FRONT FORK SUPPORT STEM STEADY. LOOSEN AND REMOVE THE PRE-INSTALLED BOLT(SIZE M5 X 30MM) BY TWISTING IT OUT COUNTERCLOCKWISE WITH THE PHILLPS-HEAD SCREWDRIVER. SET THE BOLT AND NUT ASIDE.
2. POSITION THE FRONT FORK (B) INTO THE FRAME (A) SUCH THAT THE FRONT LEG OF THE FRONT FORK IS IN THE FORK CHANNEL AND THE BACK LEG SLIDES ONTO THE FRONT FORK SUPPORT STEM. ENSURE THAT THE HOLES ON THE SIDES OF THE BACK LEG ARE ALIGNED WITH THE HOLES ON THE SIDES OF THE FRONT FORK SUPPORT STEM.

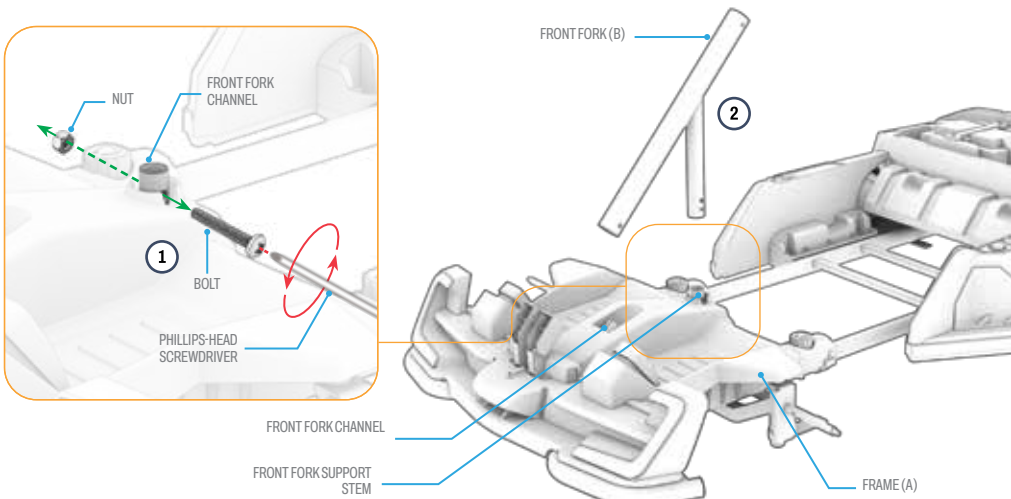

3. FROM THE HOLE ON THE LEFT SIDE, INSERT THE BOLT THROUGH BACK LEG OF THE FRONT FORK BY TWISTING IT IN CLOCKWISE UNTIL THE TIP OF THE BOLT EMERGES THROUGH THE RIGHT SIDE.
4. TWIST NUT CLOCKWISE ONTO THE TIP OF THE BOLT. HOLD THE NUT STEADY WHILE YOU TIGHTEN THE BOLT INTO IT BY TURNING THE BOLT CLOCKWISE WITH THE PHILLIPS-HEAD SCREWDRIVER.
5. CHECK THAT THE FORK IS SECURE.

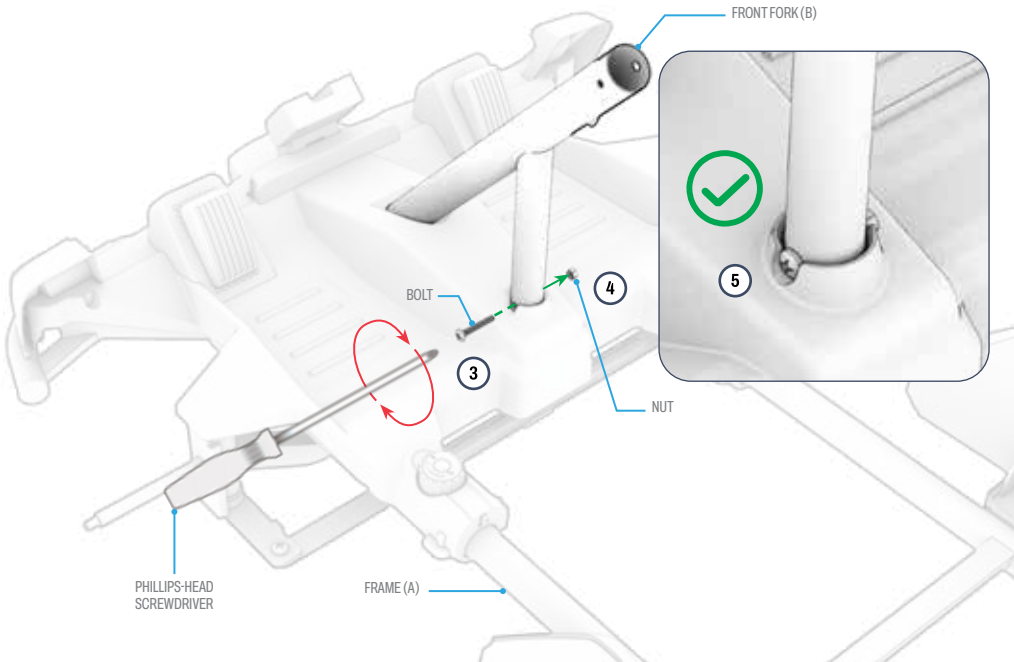

2.5 Installing the Front Guard

YOU WILL NEED THE PHILLIPS-HEAD SCREWDRIVER AND 3 MEDIUM SCREWS (S2).

1. HOLD THE FRONT GUARD (C) ABOVE THE FRONT OF THE FRAME (A).
2. MAKE THE ELECTRICAL CONNECTION BY CLICKING THE INSERTION COUPLER ON THE WIRES AT THE BASE OF THE FRONT GUARD INTO THE RECEIVING COUPLER ON THE WIRES AT THE FRONT OF THE FRAME.

⚠ **WARNING:** HANDLE ELECTRICAL COMPONENTS WITH CAUTION.

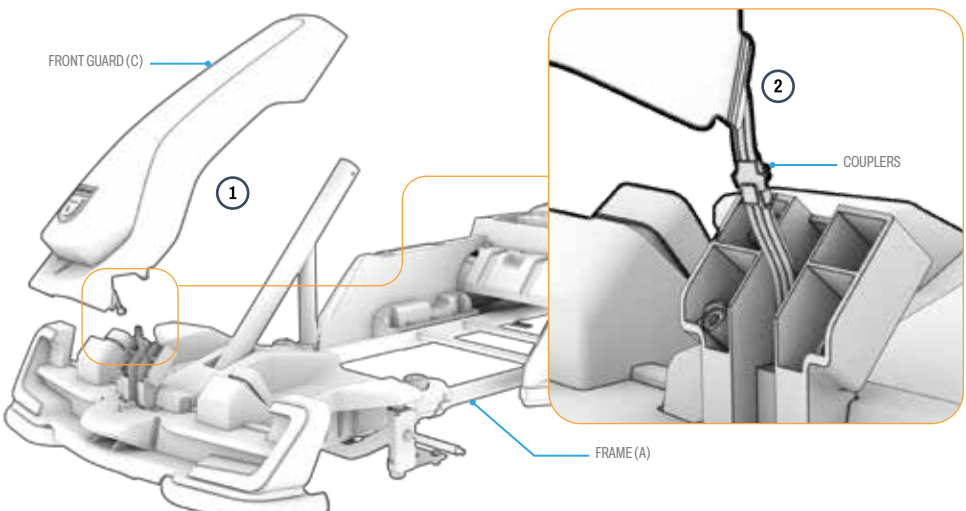

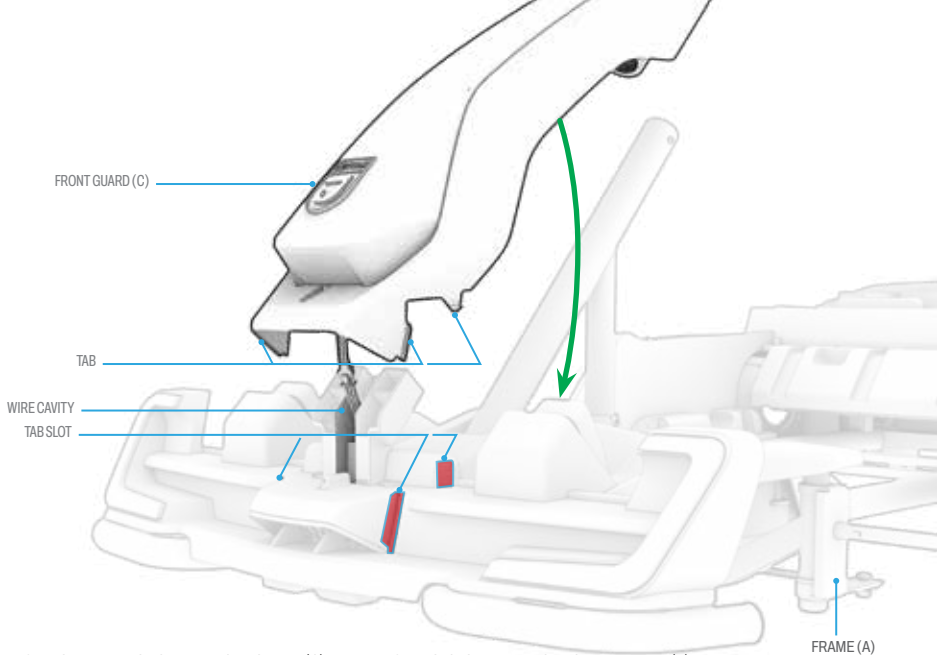

3. ALIGN THE 3 TABS AT THE BASE OF THE FRONT GUARD (C) WITH THE 3 TAB SLOTS AT THE FRONT OF THE FRAME (A).
4. WHILE TUCKING THE COUPLERS AND WIRES INTO THE WIRE CAVITY OF THE FRAME, CLICK THE TABS OF THE FRONT GUARD INTO THE TAB HOLES IN THE FRAME.

⚠ **WARNING:** TO AVOID DAMAGE TO THE WIRING THAT COULD LEAD TO MALFUNCTION, ENSURE THAT NO WIRING IS EXPOSED OR POSITIONED OUTSIDE OF THE FRAME OR FRONT GUARD.

5. CHECK THAT THE TOP OF THE FRONT FORK (B) IS ALIGNED WITH THE HOLE IN THE TOP OF THE FRONT GUARD (C).
6. POSITION THE FRONT GUARD ATTACHMENT RING (D) AROUND THE FRONT FORK SUCH THAT THE 2 SCREW HOLES IN THE RING ARE ALIGNED WITH THE 2 SCREW HOLES ON THE BACK SIDE OF THE FRONT GUARD.
7. INSERT 1 MEDIUM SCREW (S2) INTO EACH SET OF ALIGNED HOLES BY TWISTING IT IN CLOCKWISE. (2 TOTAL) TIGHTEN THE SCREWS WITH THE PHILLIPS-HEAD SCREWDRIVER. INSERT 1 MEDIUM SCREW (S2) INTO THE SET OF ALIGNED HOLES ON THE FRONT SIDE OF THE FRONT GUARD AND FRAME UNDERNEATH IT BY TWISTING IT IN CLOCKWISE. TIGHTEN THE SCREW WITH THE PHILLIPS-HEAD SCREWDRIVER.

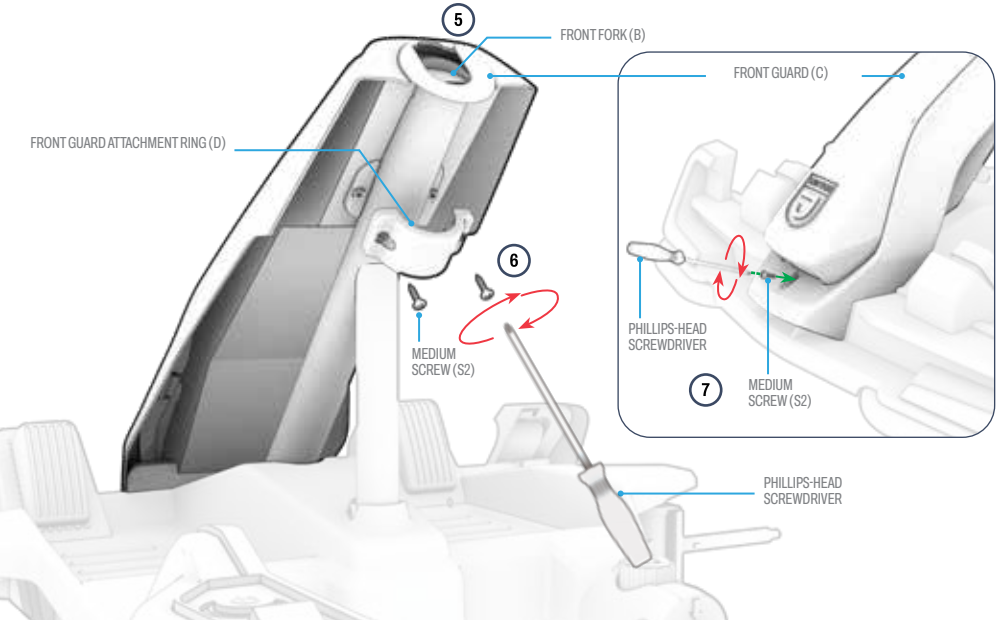

8. CHECK THAT THE FRONT GUARD (C) IS SECURE.

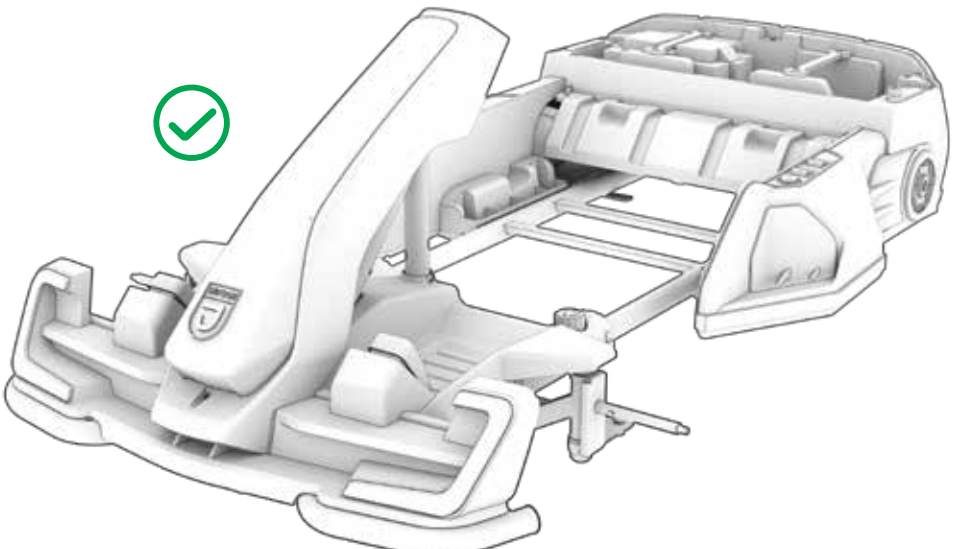

2.6 Assembling the Steering System

YOU WILL NEED THE PHILLIPS-HEAD SCREWDRIVER.

1. HOLD THE PRE-INSTALLED NUT(SIZE M5) ON THE STEERING WHEEL STEM STEADY. LOOSEN AND REMOVE THE PRE-INSTALLED BOLT(SIZE M5 X 55MM) BY TWISTING IT OUT COUNTERCLOCKWISE WITH THE PHILLPS-HEAD SCREWDRIVER. SET THE BOLT AND NUT ASIDE.

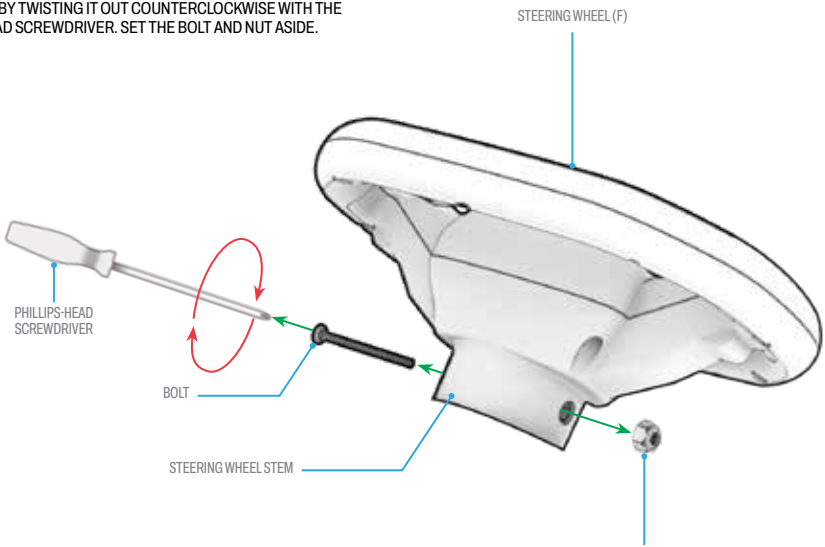

2. **TURN THE FRAME (A) ONTO ONE SIDE.**
3. INSERT THE STRAIGHT END OF THE STEERING ROD (E) THROUGH THE STEERING ROD COLUMN ON THE UNDERSIDE OF THE FRAME, GUIDING THE HOOK INTO THE HOLE OF THE TURNING CONNECTOR.

IMPORTANT: HOLD THE STEERING ROD IN POSITION WHILE MANEUVERING THE FRAME AND CONDUCTING THE REST OF THE STEERING SYSTEM ASSEMBLY STEPS TO ENSURE THAT THE HOOK REMAINS IN THE HOLE OF THE TURNING CONNECTOR.

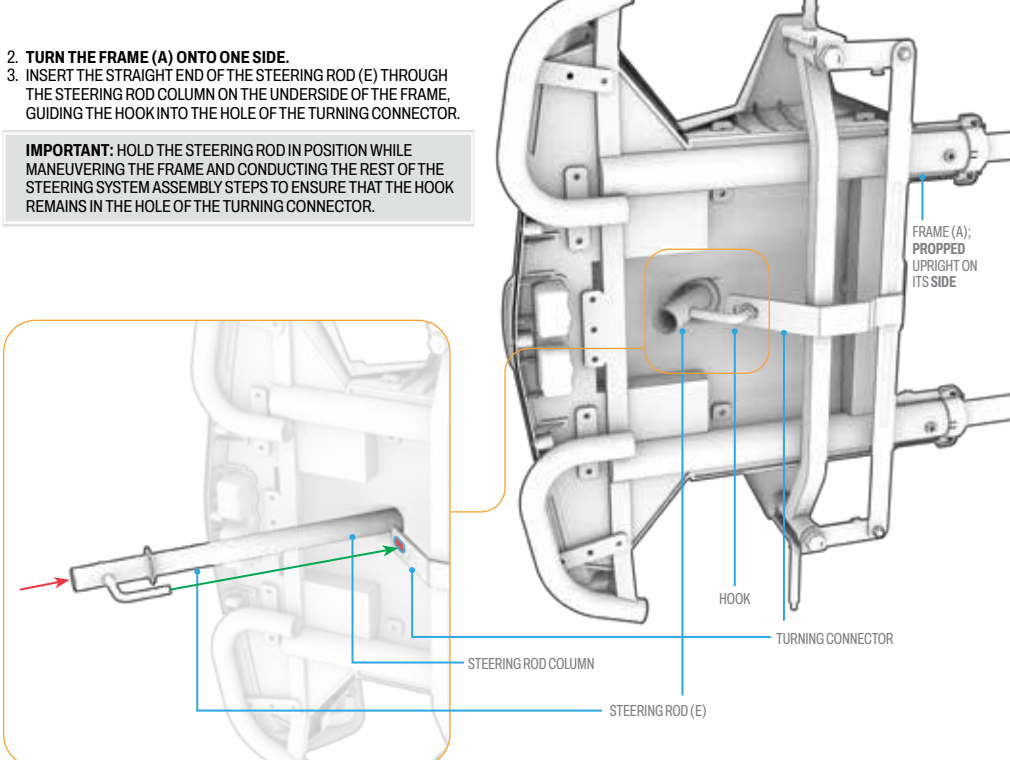

4. **ENSURE THAT THE TIP OF THE STEERING ROD EMERGES THROUGH THE TOP OF THE FRONT AXLE ON THE TOP SIDE OF THE FRAME. CAREFULLY FLIP THE FRAME RIGHT SIDE UP WITH ONE HAND HOLDING THE STEERING ROD IN POSITION, SO THAT THE STEERING ROD HOOK REMAINS IN THE HOLE OF THE TURNING CONNECTOR.**
5. HOLD THE STEERING ROD (E) IN PLACE WHILE YOU CONNECT THE WIRES IN THE STEERING WHEEL (F) TO THE WIRES IN THE FRONT GUARD (C). TO DO SO, MATCH THE WIRES SETS OF THE SAME COLOR AND CLICK THE INSERTION COUPLER OF EACH WIRE SET INTO THE RECEIVING COUPLER.
   IMPORTANT: CONNECT THE WIRE SETS OF MATCHING COLOR.

⚠ **WARNING:** HANDLE ELECTRICAL COMPONENTS WITH CAUTION.

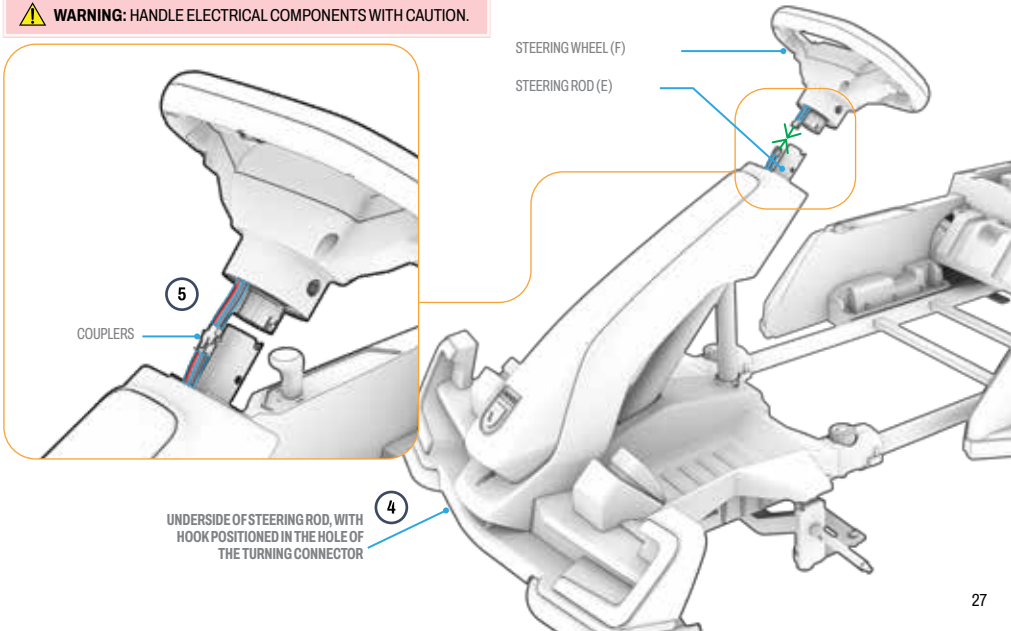

6. TUCK THE WIRES INTO THE CAVITY OF THE STEERING WHEEL (F) STEM, AND SLIDE THE STEM ONTO THE STEERING ROD (E).

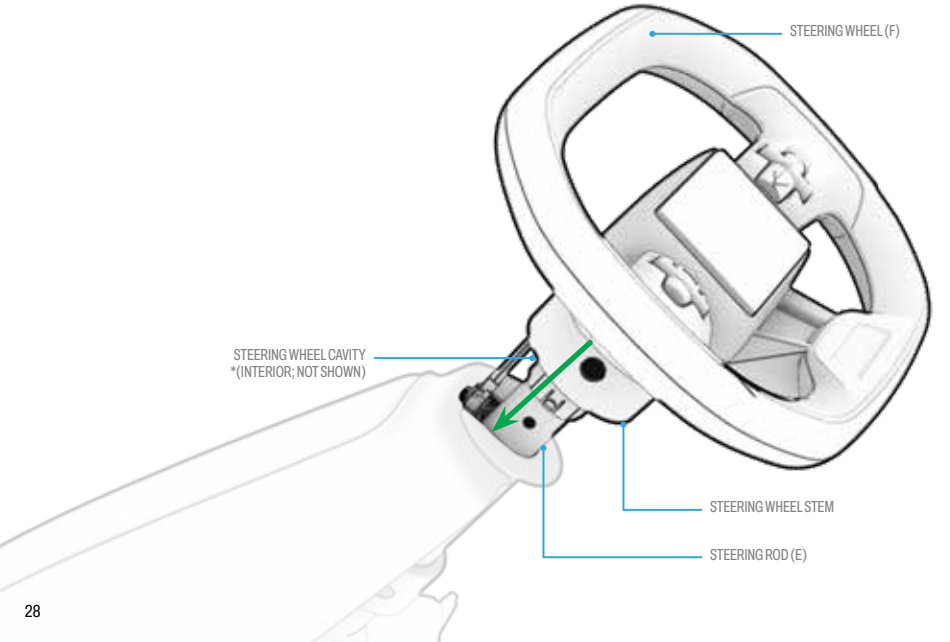

WARNING: TO AVOID DAMAGE TO THE WIRING THAT COULD LEAD TO MALFUNCTION, ENSURE THAT NO WIRING IS EXPOSED OR POSITIONED OUTSIDE OF THE STEM.

7. POSITION THE STEERING WHEEL SUCH THAT THE HOLES IN THE SIDES OF THE STEERING WHEEL STEM ARE ALIGNED WITH THE HOLES OF THE STEERING ROD.
8. FROM THE RIGHT SIDE, INSERT THE BOLT THROUGH THE HOLES IN THE STEERING WHEEL STEM BY TWISTING IT IN CLOCKWISE UNTIL THE TIP EMERGES ON THE LEFT SIDE.
9. TWIST THE NUT CLOCKWISE ONTO THE TIP OF THE BOLT. HOLD THE NUT STEADY WHILE YOU TIGHTEN THE BOLT INTO IT BY TURNING THE BOLT CLOCKWISE WITH THE PHILLIPS-HEAD SCREWDRIVER.

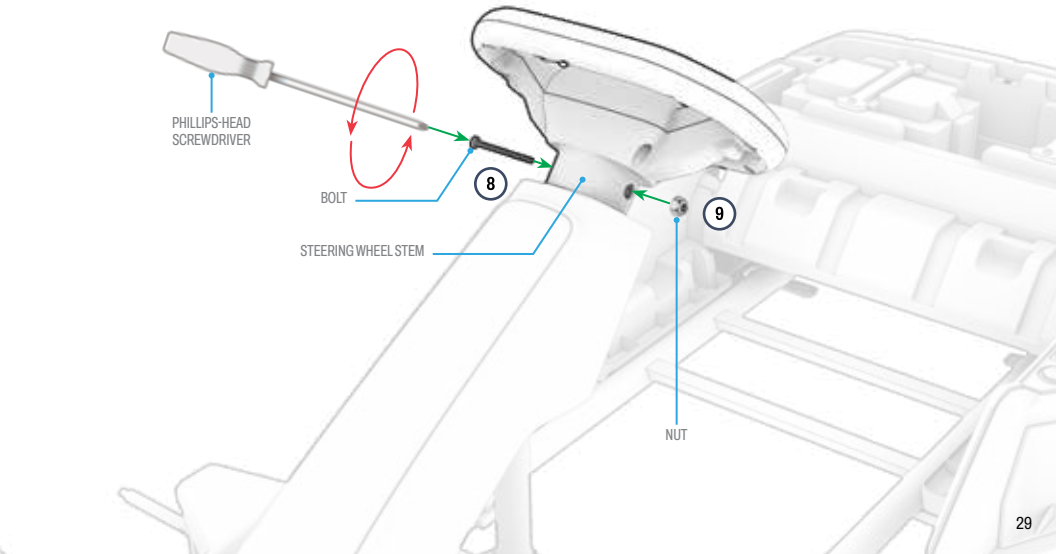

10. CHECK THAT THE STEERING WHEEL IS SECURE.

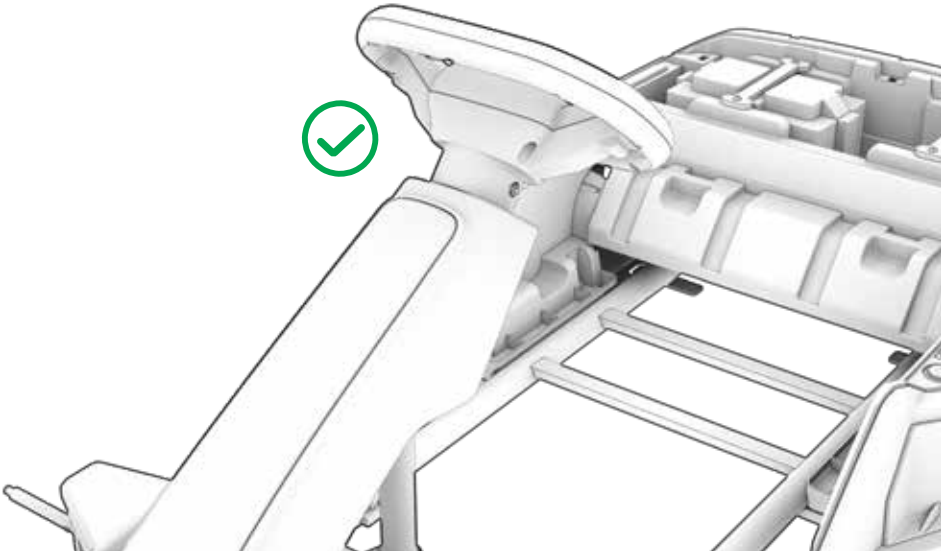

2.7 Attaching the Rear Wheels

YOU WILL NEED BOTH SOCKET WRENCHES.

1. LOOSEN AND REMOVE THE 2 PRE-INSTALLED AXLE NUTS(SIZE M8) FROM THE REAR AXLE (G) BY TWISTING EACH OFF COUNTERCLOCKWISE WITH A SOCKET WRENCH. SLIDE THE 2 PRE-INSTALLED MEDIUM WASHERS (M8 × 22 MM × 1.3 MM) OFF OF THE REAR AXLE. SET THE HARDWARE ASIDE.

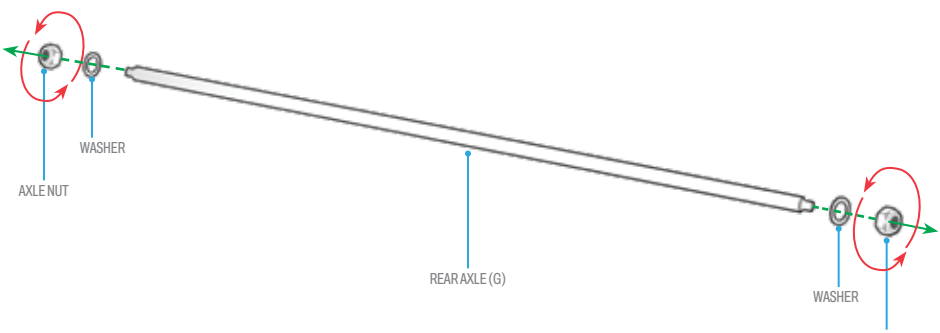

2. POSITION THE FRAME (A) RIGHT SIDE UP.
3. FROM ONE SIDE OF THE FRAME, SLIDE THE REAR AXLE (G) THROUGH THE REAR AXLE CHANNEL UNTIL THE TIP EMERGES ON THE OTHER SIDE OF THE FRAME.

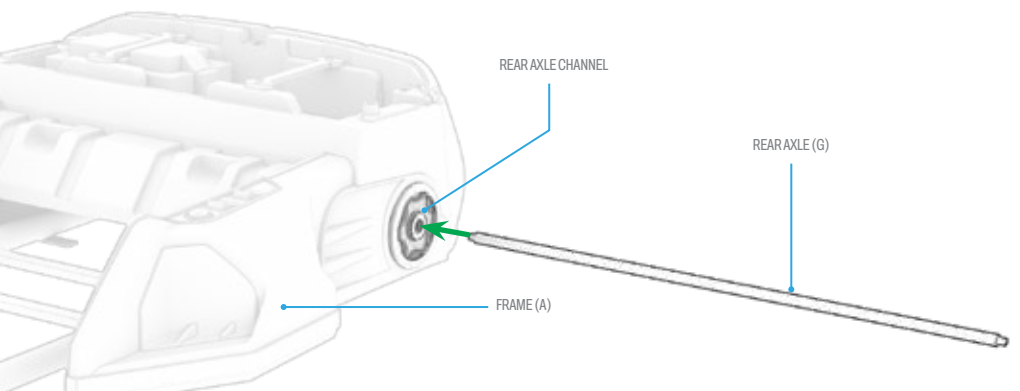

4. LEADING WITH THE SIDE OF THE WHEEL THAT HAS THE GEAR FOR THE GEAR BOX, SLIDE 1 REAR WHEEL (H) ONTO THE RIGHT SIDE OF THE REAR AXLE (G) UNTIL THE WHEEL FITS SNUGLY INTO THE GEAR BOX.
5. SLIP 1 WASHER ONTO THE AXLE.
6. TWIST 1 AXLE CLOCKWISE ONTO THE TIP OF THE AXLE.
7. REPEAT STEPS 4-6 ON THE LEFT SIDE OF THE AXLE.

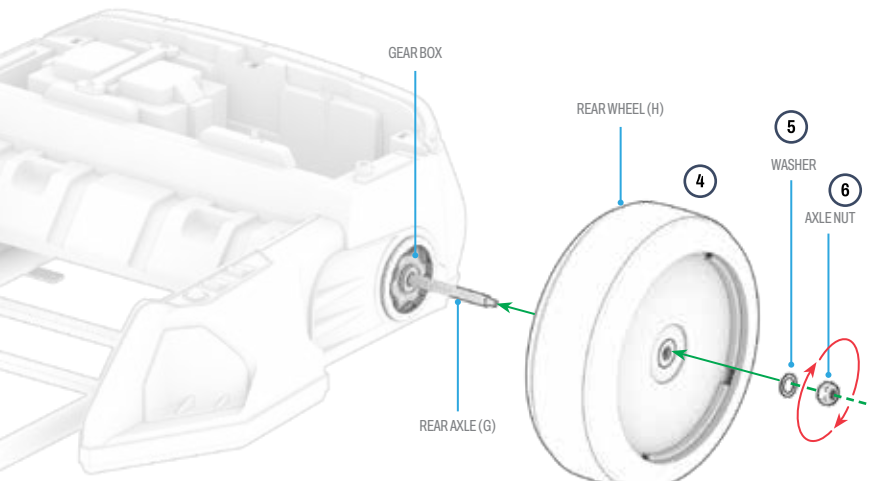

8. USE 1 SOCKET WRENCH TO HOLD AN AXLE NUT STEADY WHILE YOU TIGHTEN THE AXLE NUT ON THE OTHER REAR WHEEL BY TURNING IT CLOCKWISE WITH THE 2ND SOCKET WRENCH.
9. USE THE SAME METHOD TO TIGHTEN THE OTHER AXLE NUT.

IMPORTANT: DO NOT OVERTIGHTEN THE NUTS. OVERTIGHTENING CAN CAUSE DAMAGE TO THE WHEELS.

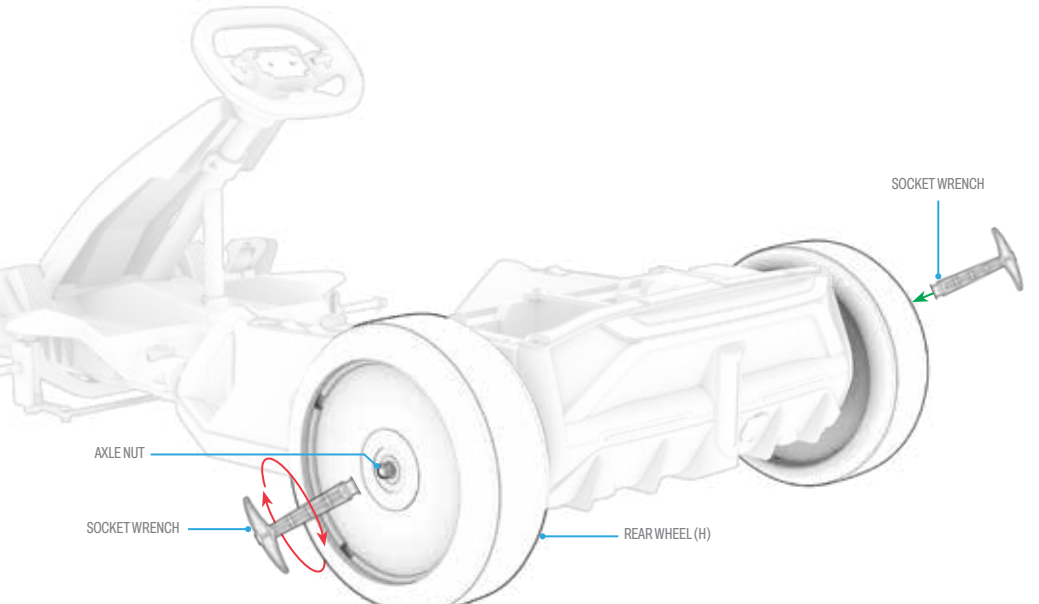

10. CHECK THAT THE REAR WHEELS (H) ARE SECURE AND ROTATE FREELY.
11. LEADING WITH 4 TABS ON THE HUBCAP, CLICK 1 REAR HUBCAP (I) ONTO EACH REAR WHEEL BY INSERTING THE TABS INTO THE TAB SLOTS ON THE WHEEL. (LEFT AND RIGHT).

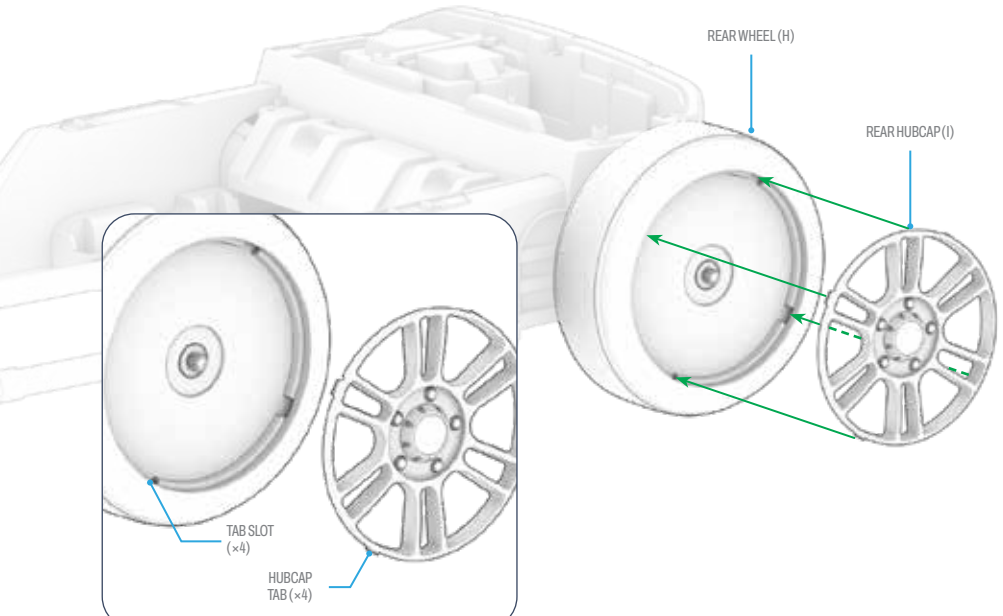

12. CHECK THAT THE REAR HUBCAPS (I) ARE SECURE ON THE REAR WHEELS (H).

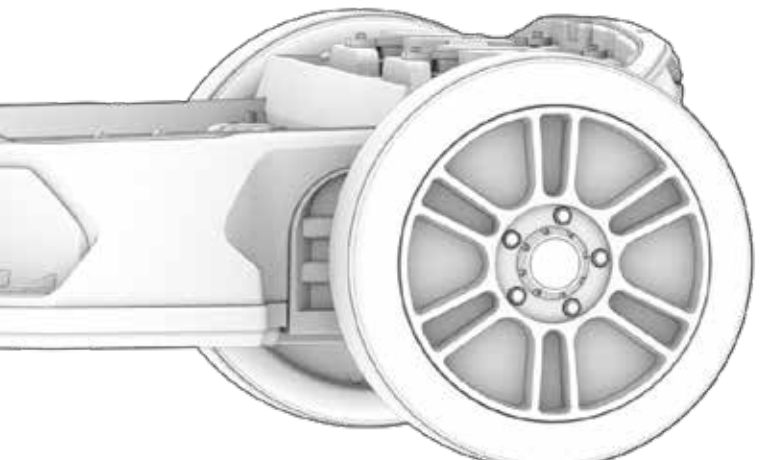

2.8 Attaching the Front Wheels

YOU WILL NEED 1 SOCKET WRENCH.

1. LOOSEN AND REMOVE THE PRE-INSTALLED AXLE NUT(SIZE M8) FROM ONE SIDE OF THE FRONT AXLE BY TWISTING IT OFF COUNTERCLOCKWISE WITH A SOCKET WRENCH. SLIDE THE PRE-INSTALLED MEDIUM (M8 × 22 MM × 1.3 MM) AND LARGE (M8 × 24 MM × 1.3 MM) WASHERS OFF OF THE FRONT AXLE. SET THE HARDWARE ASIDE.

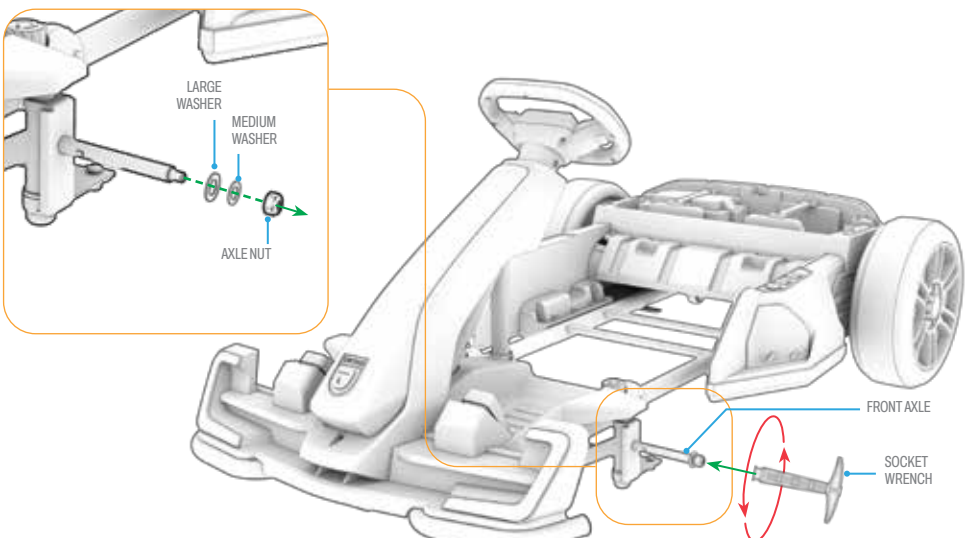

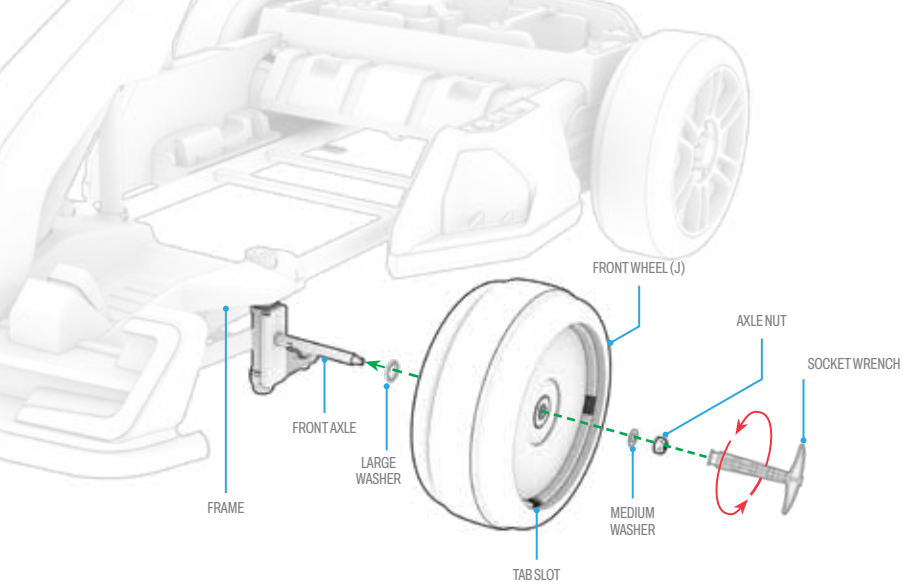

2. SLIDE THE LARGE WASHER ONTO THE RIGHT SIDE OF THE FRONT AXLE.
3. WITH THE SIDE OF WHEEL THAT HAS THE TAB SLOTS FACING AWAY FROM THE FRAME, SLIDE 1 FRONT WHEEL (J) ONTO THE AXLE.
4. SLIDE THE MEDIUM WASHER ONTO THE END OF THE AXLE.
5. TWIST AN AXLE NUT CLOCKWISE ONTO THE TIP OF THE AXLE.
6. TIGHTEN THE AXLE NUT BY TURNING IT CLOCKWISE WITH THE SOCKET WRENCH.
7. REPEAT STEPS 1-6 ON THE LEFT SIDE OF THE AXLE WITH THE OTHER FRONT WHEEL.

IMPORTANT: DO NOT OVERTIGHTEN THE NUTS. OVERTIGHTENING CAN CAUSE DAMAGE TO THE WHEELS.

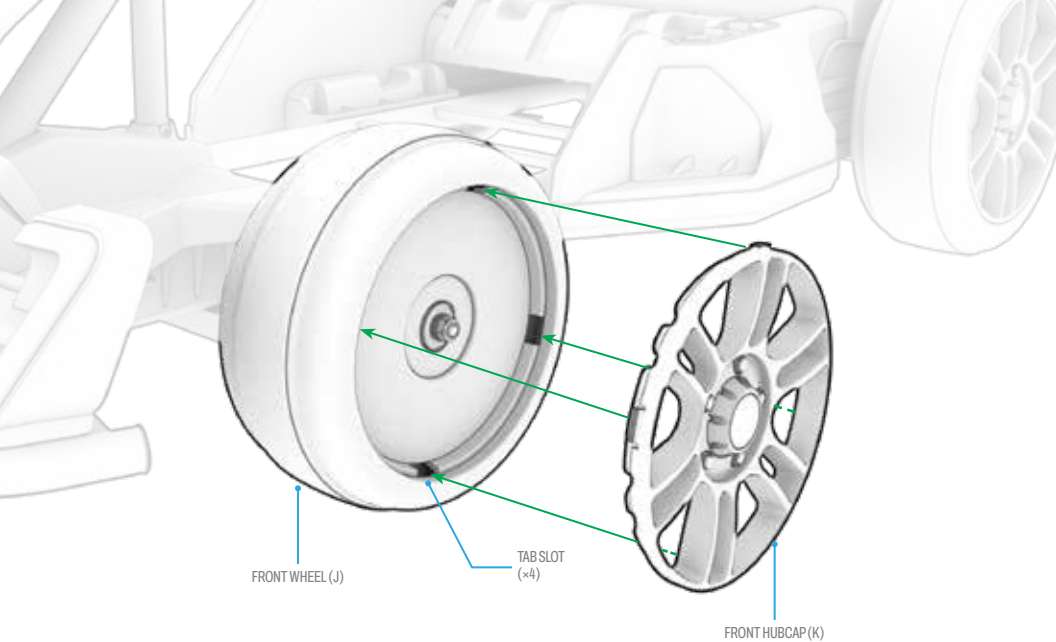

8. CHECK THAT THE FRONT WHEELS (J) ARE SECURE AND ROTATE FREELY.
9. LEADING WITH THE 4 TABS ON THE HUBCAP, CLICK 1 FRONT HUBCAP (K) ONTO EACH FRONT WHEEL BY INSERTING THE TABS INTO THE TAB SLOTS ON THE WHEEL. (LEFT AND RIGHT).

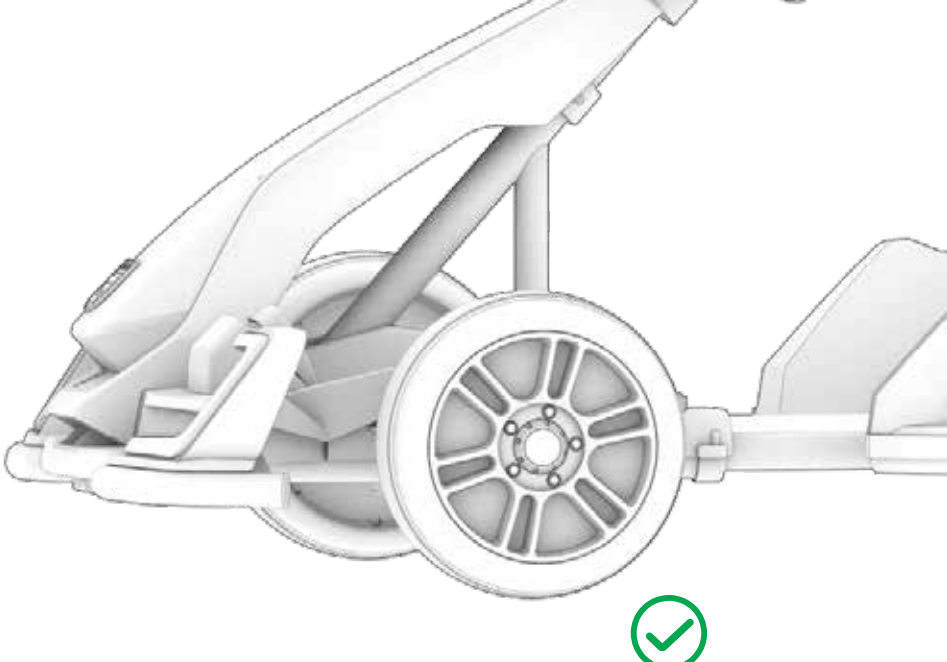

10. CHECK THAT THE FRONT HUBCAPS (K) ARE SECURE ON THE FRONT WHEELS (J).

2.9 Installing the Seat

YOU WILL NEED THE PHILLIPS-HEAD SCREWDRIVER AND 2 MEDIUM SCREWS (S2).

1. POSITION THE SEAT (L) ABOVE THE FRAME (A) SUCH THAT:
   - THE SEATBELT STRAPS ARE ON TOP OF THE SITTING AREA.
   - THE SEAT BACK IS VERTICAL.
   - THE SEAT BACK IS AT THE REAR OF THE PASSENGER AREA.
2. PLACE THE SEAT IN THE FRAME SO THAT THE SCREW HOLES IN THE SEAT BACK ARE IN LINE WITH THE SCREW HOLES IN THE FRAME IN FRONT OF THE BATTERY COMPARTMENT.

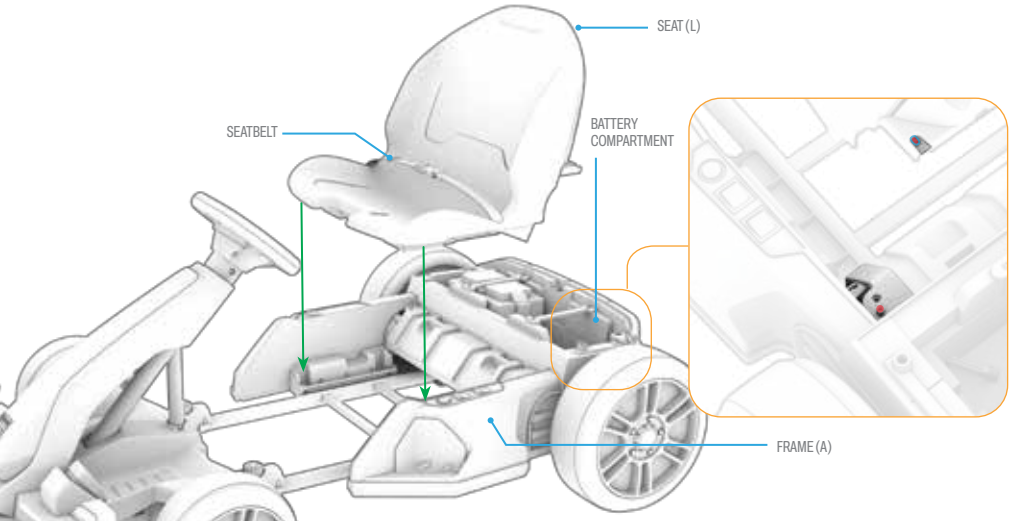

3. INSERT ONE MEDIUM SCREW (S2) INTO EACH SET OF ALIGNED HOLES BY TWISTING IT IN CLOCKWISE. (2 TOTAL)
4. FULLY TIGHTEN EACH SCREW BY TURNING IT CLOCKWISE WITH THE PHILLIPS-HEAD SCREWDRIVER.
5. CHECK THAT THE SEAT (L) IS SECURE IN THE FRAME (A).

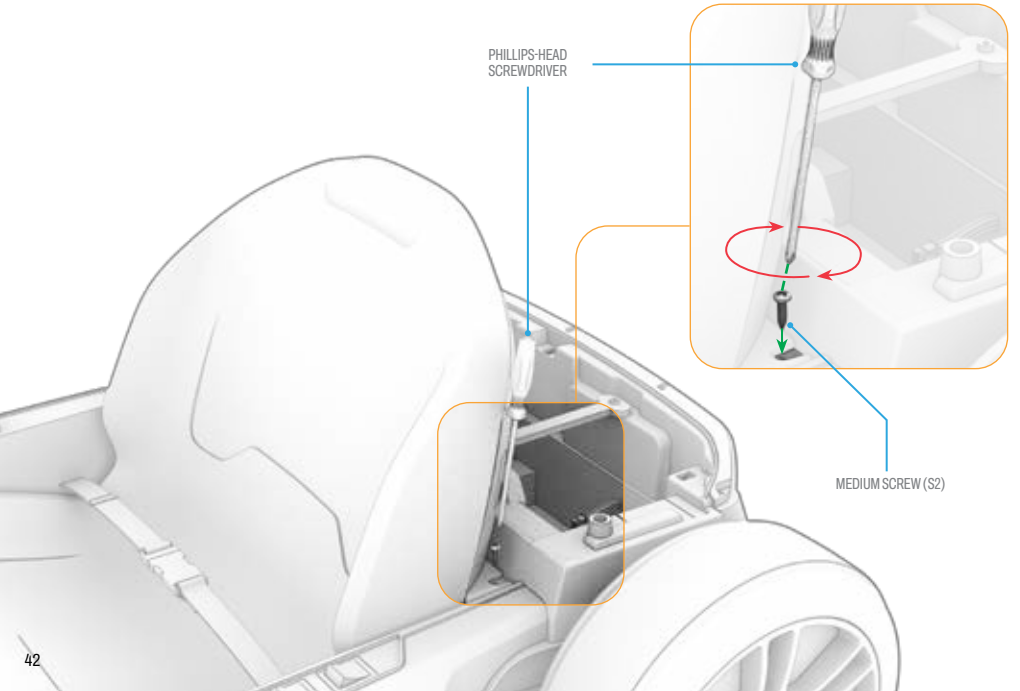

2.10 Connecting the Battery

FROM THE 2 SETS OF WIRES IN THE BATTERY COMPARTMENT, MAKE THE ELECTRICAL CONNECTION BY CLICKING THE INSERTION COUPLER INTO THE RECEIVING COUPLER.

⚠ **WARNING:** HANDLE ELECTRICAL COMPONENTS WITH CAUTION.

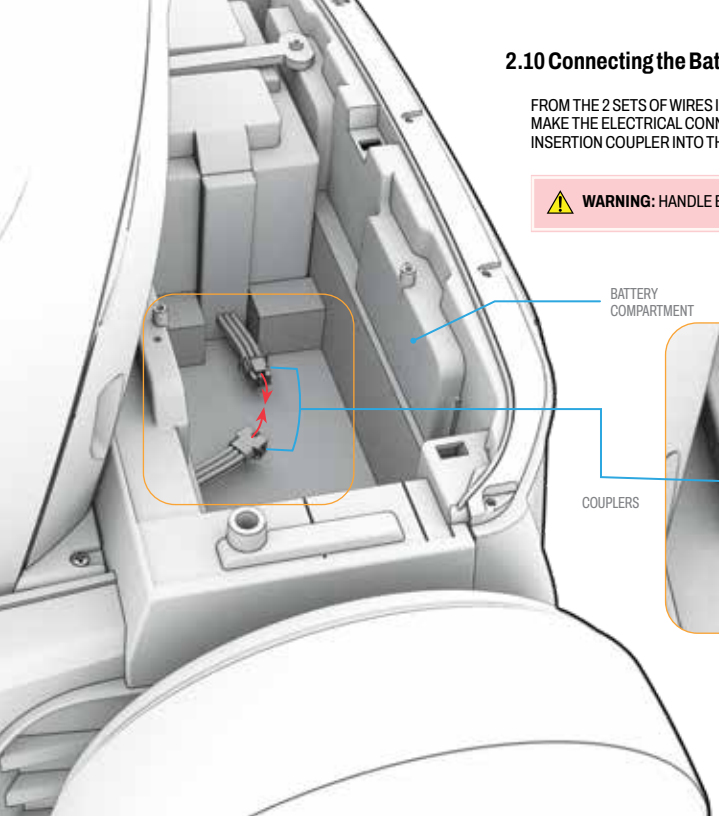

2.11 Assembling & Attaching the Spolier and Battery Compartment Cover

YOU WILL NEED THE PHILLIPS-HEAD SCREWDRIVER AND 2 SMALL SCREWS (S1).

1. PLACE THE BATTERY COMPARTMENT COVER (M) UPRIGHT ON A LEVEL SURFACE.
2. INSERT THE LEGS OF THE SPOILER (N) INTO THE GROOVES ON THE BATTERY COMPARTMENT COVER SO THAT THE SCREW HOLE AT THE BASE OF EACH LEG IS ALIGNED WITH THE SCREW HOLE IN EACH GROOVE.
3. INSERT 1 SMALL SCREW (S1) INTO EACH SET OF ALIGNED HOLES BY TWISTING IT IN CLOCKWISE. (2 TOTAL)
4. FULLY TIGHTEN EACH SCREW BY TURNING IT CLOCKWISE WITH THE PHILLIPS-HEAD SCREWDRIVER.
5. CHECK THAT THE SPOILER IS SECURE ON THE BATTERY COMPARTMENT COVER.

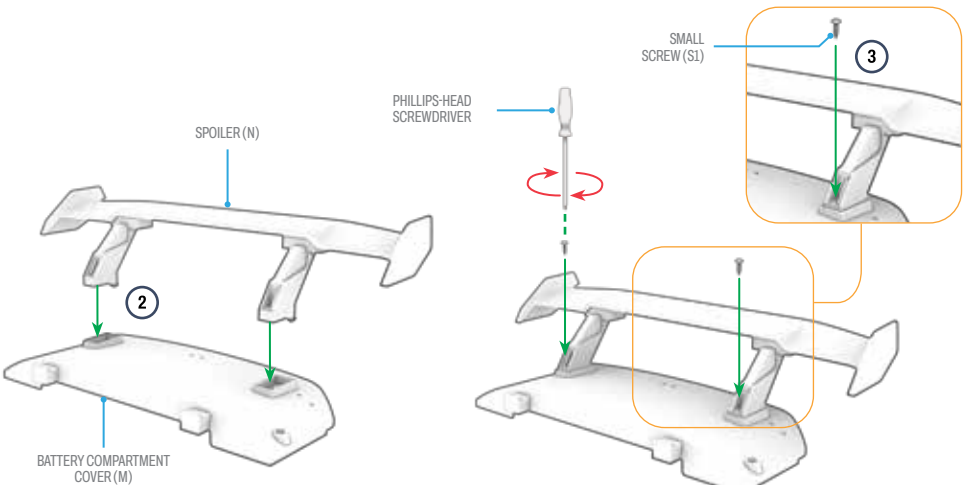

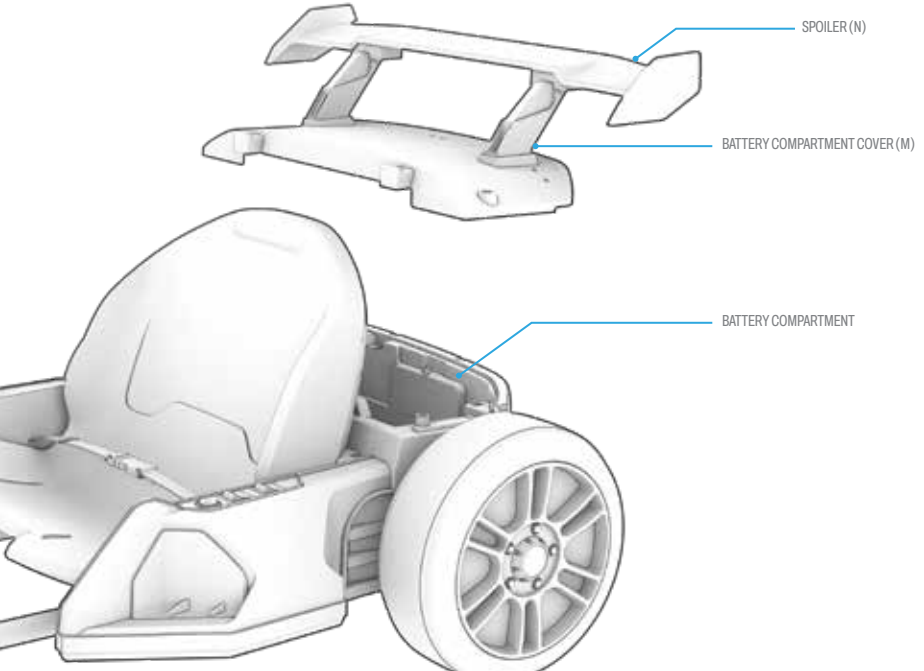

6. POSITION THE BATTERY COMPARTMENT COVER (M) WITH SPOILER (N) ABOVE THE BATTERY COMPARTMENT, WITH THE SPOILER EXTENDING UP AND OVER THE REAR OF THE GO-KART.

7. INSERT THE 2 TABS AT THE FRONT OF THE BATTERY COMPARTMENT COVER (M)INTO THE 2 SLOTS ON THE BACK SIDE OF THE SEAT BACK.
8. ATTACH THE BATTERY COMPARTMENT COVER TO THE BATTERY COMPARTMENT BY CLICKING THE 3 TABS ON THE UNDERSIDE OF THE BATTERY COMPARTMENT COVER INTO THE 3 TAB SLOTS IN THE BATTERY COMPARTMENT.

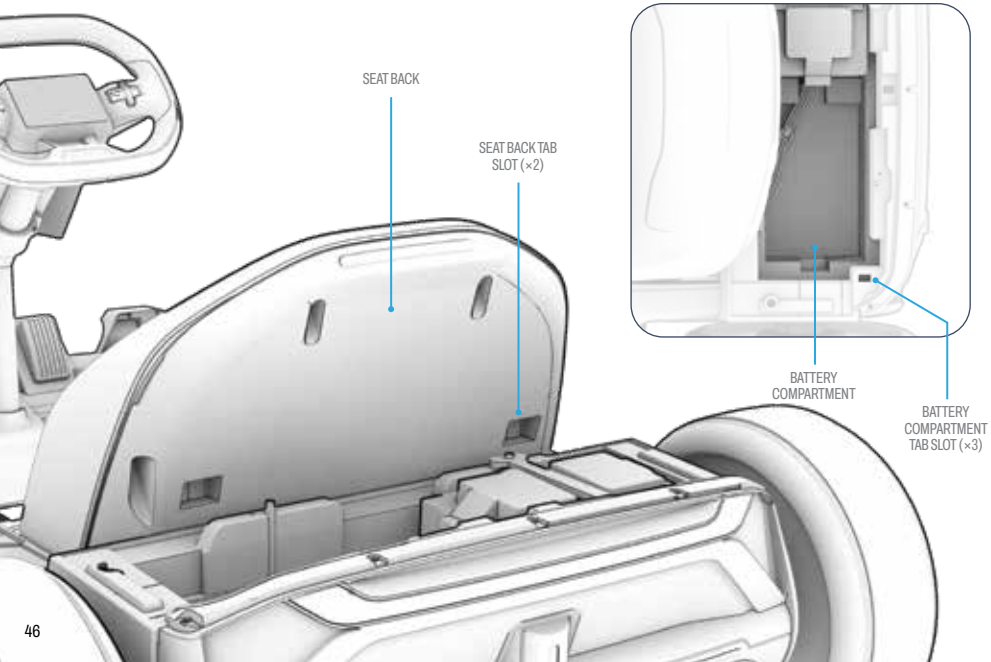

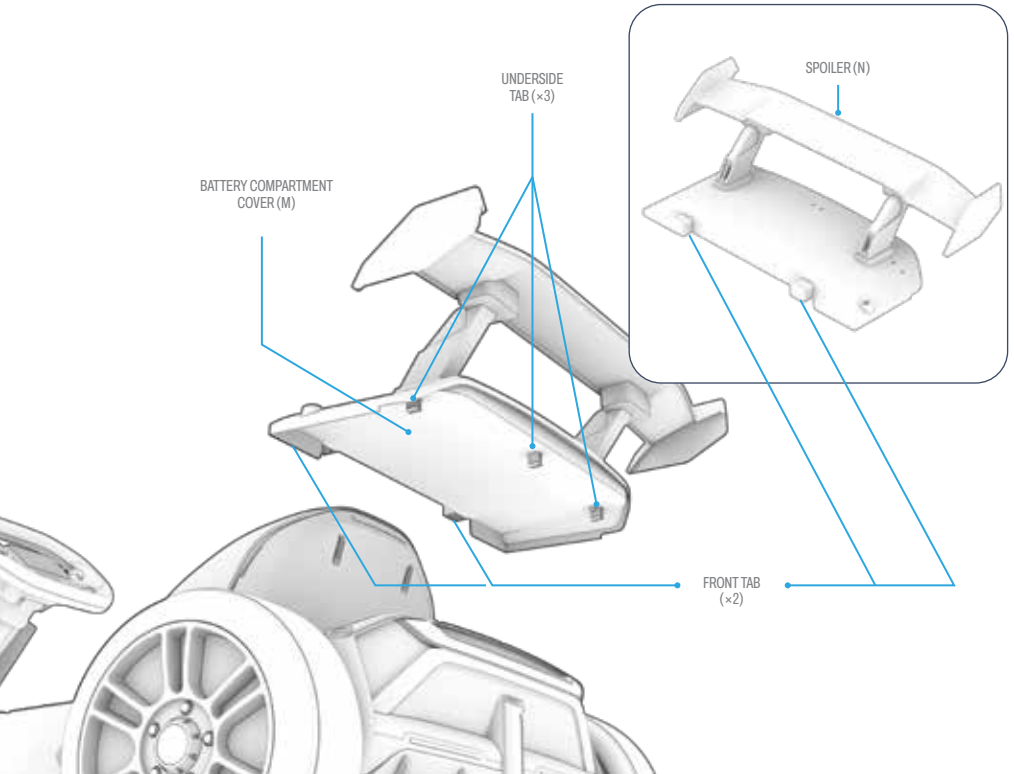
SPOILER (N)
UNDERSIDE TAB (×3)
BATTERY COMPARTMENT COVER (M)
FRONT TAB (×2)

9. CHECK THAT THE BATTERY COMPARTMENT COVER (M) WITH SPOILER (N) IS SECURE ON THE FRAME (A).

⚠ **CAUTION:** NEVER USE THE BATTERY COMPARTMENT FOR STORAGE OR CARRYING OF CARGO.

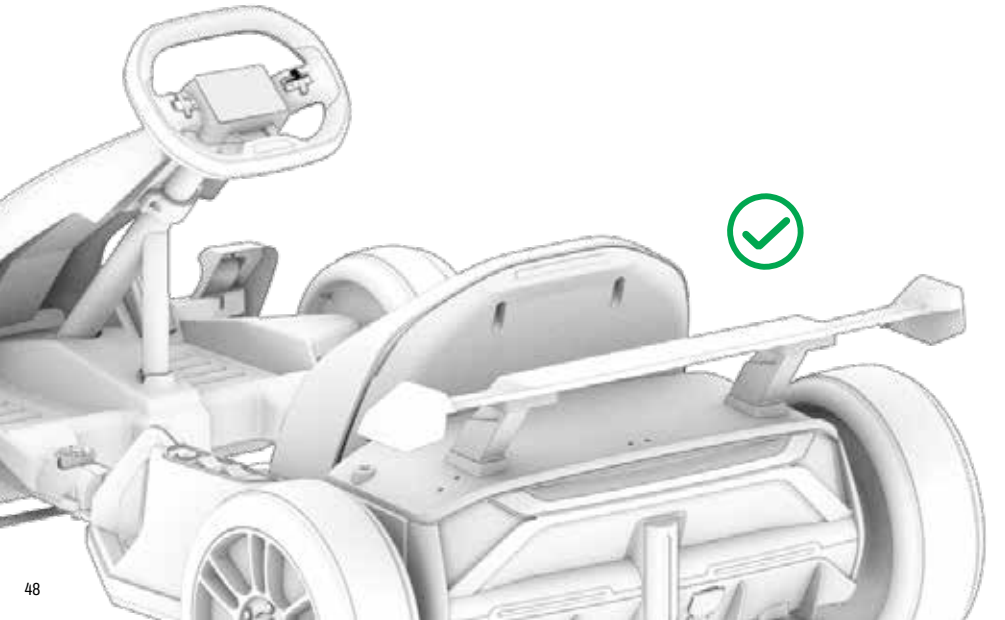

2.12 Charging the Battery

1. PULL OPEN THE COVER ON THE CHARGING PORT.
2. PLUG THE CHARGER INTO THE WALL, AND THEN PLUG THE CHARGER CORD INTO THE CHARGING PORT.
3. WHEN THE INDICATOR LIGHT ON THE CHARGER TURNS FROM RED TO GREEN, YOUR BATTERY HAS REACHED FULL CHARGE. REMOVE THE CHARGER FROM THE CHARGING PORT AND UNPLUG THE CABLE FROM THE WALL OUTLET.
4. CLOSE THE CHARGING PORT COVER.

CHARGING INDICATOR LIGHT ON THE CHARGER:	STATUS
RED ILLUMINATION	CHARGING
GREEN ILLUMINATION	CHARGING COMPLETE

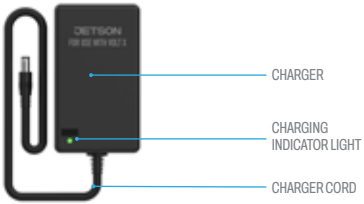

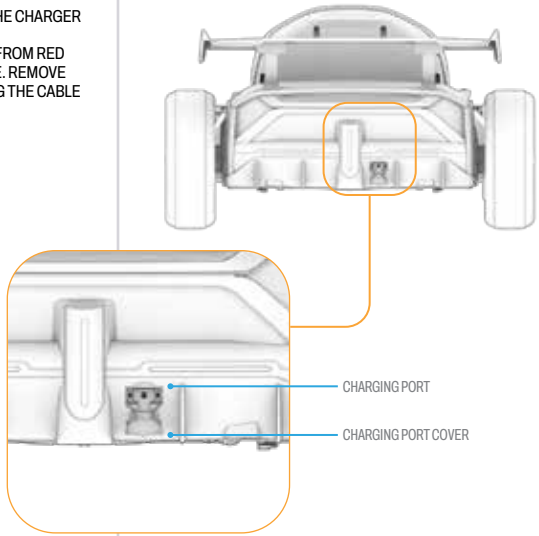

Important Charging Notes:

- ALWAYS KEEP THE CHARGING PORT CLOSED WHEN NOT ACTIVELY CHARGING THE BATTERY.
- NEVER TURN ON THE PRODUCT WHILE IT IS CHARGING.
- DO NOT USE RELOCATABLE POWER TAPS.
- FOR BEST BATTERY HEALTH, CHARGE THE BATTERY FULLY DURING EACH CHARGING SESSION—ABOUT 4 HOURS.
- NEVER LEAVE YOUR PRODUCT CHARGING OVERNIGHT OR FOR EXTENDED PERIODS OF TIME.
- DO NOT ATTEMPT TO REMOVE OR DISASSEMBLE THE BATTERY.
- CHARGING AMBIENT TEMPERATURE RANGE: 32°F (0°C) - 104°F (40°C)
- OPERATING AMBIENT TEMPERATURE RANGE: 32°F(0°C)-104°F(40°C)
- ALWAYS KEEP THE CHARGING PORT COVER CLOSED WHEN NOT ACTIVELY CHARGING THE PRODUCT.
- DO NOT USE THIS PRODUCT IF THE FLEXIBLE POWER CORD OR OUTPUT CABLE IS FRAYED, HAS BROKEN INSULATION , OR ANY OTHER SIGNS OF DAMAGE.
- CHECK THAT THE CHARGER MODEL NUMBER ON THE CHARGER LABEL MATCHES THE CHARGER MODEL NUMBER LISTED ABOVE.
- CHECK THAT THE CHARGER LABEL IDENTIFIES THE CHARGER AS COMPATIBLE WITH YOUR JETSON MODEL. YOU CAN FIND YOUR JETSON MODEL'S NAME AND SKU ON A LABEL ADHERED TO THE TOP, SIDE, OR UNDERSIDE OF THE PRODUCT'S FRAME OR STANDING DECK.

IMPORTANT:

ONLY USE THE INCLUDED CHARGER OR ONE OBTAINED DIRECTLY THROUGH JETSON LABELED WITH HK024-240100AXU OR THE PART SKU PJVOLTX-CH.

⚠ WARNING: FAILURE TO USE CORRECT CHARGER CAN RESULT IN FIRE AND EXPLOSION, RESULTING IN PROPERTY DAMAGE, INJURY, AND DEATH.



THIS IS AN EXAMPLE OF THE MARKING YOUR CHARGER WILL HAVE.

3. SAFE JOURNEYING.

3.1 Pre-Ride Safety Checks

CONDUCT THESE IMPORTANT SAFETY CHECKS BEFORE EVERY JOURNEY:

Brakes:

- MAKE SURE THE BRAKE PEDAL IS FUNCTIONING PROPERLY AND THAT IT BRINGS THE GO-KART TO A STOP WHEN PUSHED.

Frame:

- CHECK THAT THE FRAME IS NOT DAMAGED, BENT, OR CRACKED.

Seat Belt:

- CHECK THAT THE SEAT BELT IS SECURELY ATTACHED TO THE SEAT.
- ENSURE THAT THE BELT CAN BE FASTENED SECURELY WITH THE CLIPS AND ADJUSTMENT BUCKLE.

Steering:

- CHECK THAT THE STEERING WHEEL AND FRONT WHEELS ROTATE IN ALIGNMENT.
- CHECK THAT THE STEERING WHEEL IS SECURED IN POSITION.

Wheels:

- CHECK THAT FRONT WHEELS DO NOT SHOW SIGNS OF EXCESSIVE WEAR OR DAMAGE.
- CHECK THAT THE WHEEL HARDWARE IS TIGHT AND THAT THE WHEELS ARE SECURE ON THE AXLES.
- CHECK THAT THE WHEELS ROTATE FREELY.
- CHECK THAT THE WHEELS ARE CLEAR OF DEBRIS.

3.2 Helmet Safety

A HELMET SHOULD BE WORN BY THE RIDER AT ALL TIMES.



IMPROPER POSITIONING:
THE FOREHEAD IS EXPOSED.
A FALL COULD RESULT IN SERIOUS INJURY.



PROPER POSITIONING:
THE FOREHEAD IS COVERED BY THE HELMET.

**WEAR A HELMET, APPROPRIATE CLOTHING, SHOES, AND SAFETY GEAR. AVOID CLOTHING THAT CAN GET CAUGHT INTO OR UNDER THE WHEELS. CLOSED-TOE, FLAT SHOES ARE RECOMMENDED. WEAR AN ASTM F1492 APPROVED HELMET AND PROTECTIVE GEAR TO PREVENT INJURY IN THE EVENT OF AN ACCIDENT.*

3.3 Fastening the Seat Belt

⚠ **WARNING:** TO PREVENT PERSONAL INJURY, ALWAYS FASTEN THE SEAT BELT PRIOR TO EVERY RIDE.

1. POSITION BOTH STRAPS OF THE SEAT BELT OVER THE LAP OF THE RIDER.
2. CLICK THE INSERTION CLIP INTO THE RECEIVING CLIP.
3. CHECK THAT THE BELT IS SECURE AND SNUG OVER THE RIDER'S LAP. IF NECESSARY, SHORTEN OR LENGTHEN THE BELT BY MOVING THE ADJUSTMENT SLIDE BUCKLE ALONG THE STRAP.

TO RELEASE THE SEAT BELT:
WHILE SQUEEZING THE SIDES OF THE INSERTION CLIP, SLIDE THE INSERTION CLIP OUT OF THE RECEIVING CLIP.

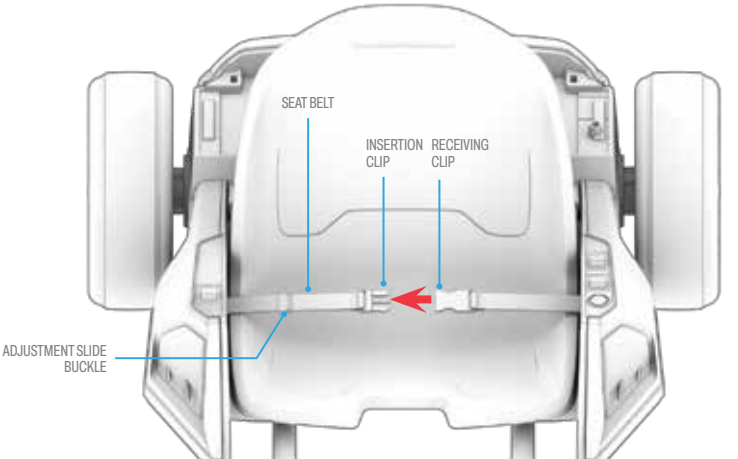

4. MAKING MOVES.

4.1 Powering On & Off

QUICK-PRESS THE POWER BUTTON TO TURN THE GO CART ON OR OFF.

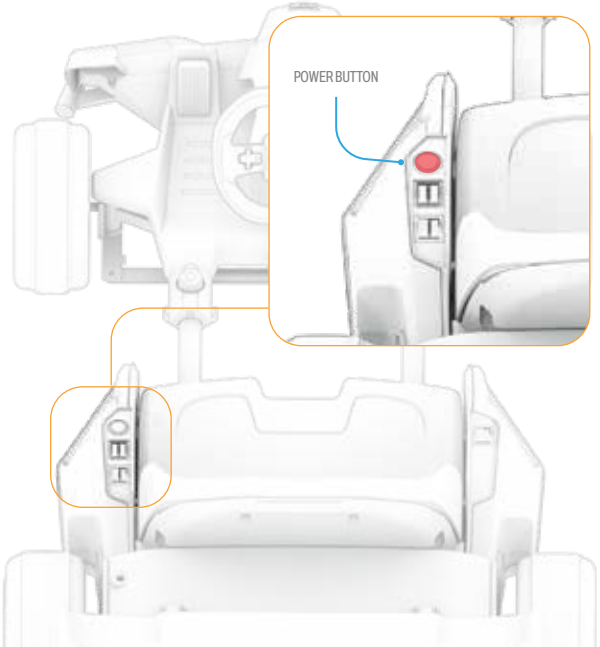

4.2 Riding

TO ACCELERATE AND MAINTAIN SPEED:
PUSH DOWN ON THE ACCELERATOR PEDAL WITH YOUR RIGHT FOOT.
TO SLOW DOWN OR STOP:
RELEASE THE ACCELERATOR PEDAL.
PUSH DOWN ON THE BRAKE PEDAL WITH YOUR LEFT FOOT.
TO TURN:
ROTATE THE STEERING WHEEL TO THE LEFT OR RIGHT.

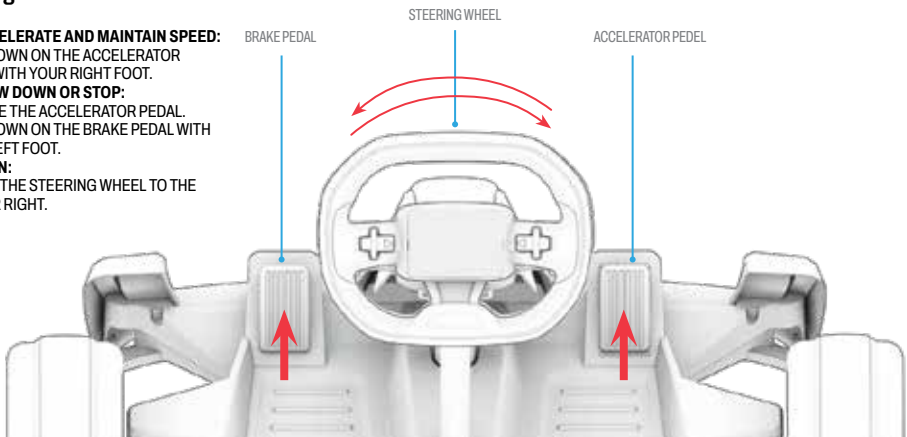

IMPORTANT: WHEN THE GO-KART IS PUSHED BEYOND ITS INTENDED CAPACITY, THE MOTORS IS SUSCEPTIBLE TO OVERLOADING. IF APPROACHING MOTOR OVERLOAD, THE GO-KART MAY ENTER PROTECTION MODE AND AUTOMATICALLY POWER OFF.

IN CASES OF OVERLOAD, LET THE MOTORS COOL OFF FOR 3 SECONDS BEFORE POWERING ON AGAIN.

TO AVOID OVERLOADING THE MOTORS, REFRAIN FROM RIDING:
- ON HIGH-RESISTANCE SURFACES SUCH AS CARPET OR ROUGH, ROCKY TERRAIN.
- UP STEEP SLOPES.
- WITH A CARRYING WEIGHT EXCEEDING 110 LB.
- OVER BUMPS, STEPS/CURBS, OR UNEVEN GROUND.
- IN DRIFT MODE FOR EXTENDED PERIODS OF TIME.

4.3 Changing Riding Modes

TOGGLE THE RIDING MODE SWITCH TO "DRIFT" OR "SPORT" TO SET THE DESIRED RIDING MODE.

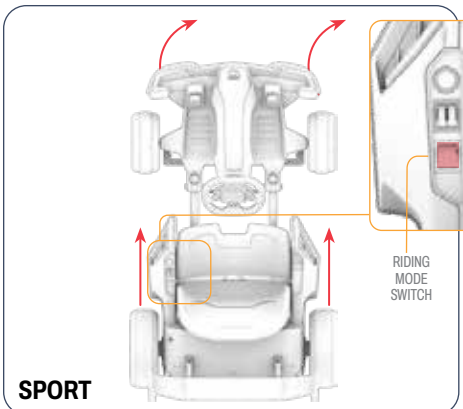

STANDARD DRIVING WITH ALL FOUR WHEELS GRIPPING THE GROUND ON TURNS.

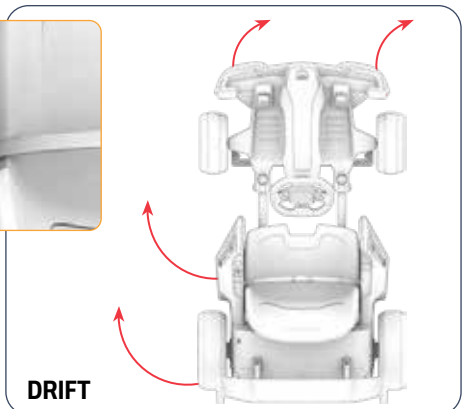

TURNING THE STEERING WHEEL ALLOWS FOR "DRIFTING"—CONTROLLED SIDEWAYS SKIDDING OF THE REAR WHEELS.

IMPORTANT NOTES ON USING DRIFT MODE:

- DO NOT USE DRIFT MODE ON ROUGH SURFACE ROADS.
- DO NOT USE DRIFT MODE WHEN BATTERY CHARGE IS UNDER 35%. (SECTION 4.7) CONTINUOUS USE OF DRIFT MODE CAN RAPIDLY DEPLETE BATTERY CHARGE.
- EXCESSIVE USE OF DRIFT MODE CAN PUSH THE MOTOR BEYOND ITS INTENDED CAPACITY. TO PREVENT MOTOR OVERLOAD, THE UNIT WILL AUTOMATICALLY POWER OFF. WAIT 3 SECONDS BEFORE POWERING BACK ON. (SECTION 4.1)
- EXTENDED USE OF DRIFT MODE CAN LOWER THE ACHIEVABLE RUN TIME PER BATTERY CHARGE. SEE SECTION 4.8 MORE MORE TIPS ON MAXIMIZING PERFORMANCE.

4.4 Changing the Speed

TOGGLE THE SPEED SWITCH TO "LOW", "MIDDLE", OR "HIGH" TO SET YOUR DESIRED MAXIMUM SPEED.

LOW(L): UP TO 4.7 MPH
MIDDLE(M): UP TO 7 MPH
HIGH(H): UP TO 14 MPH

IMPORTANT: THE MAXIMUM ACHIEVABLE SPEED CAN BE AFFECTED BY RIDING CONDITIONS. SEE SECTION 4.8 FOR TIPS ON MAXIMIZING PERFORMANCE.

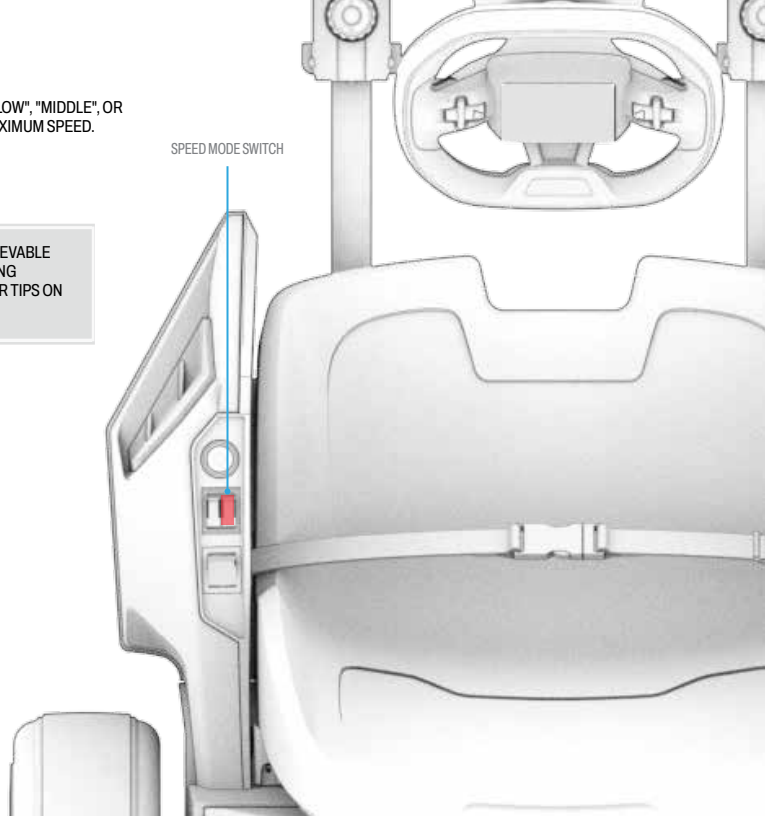

4.5 Changing Direction

TOGGLE THE DIRECTION SWITCH TO "FORWARD" OR "BACK" TO SET YOUR DESIRED DIRECTION.

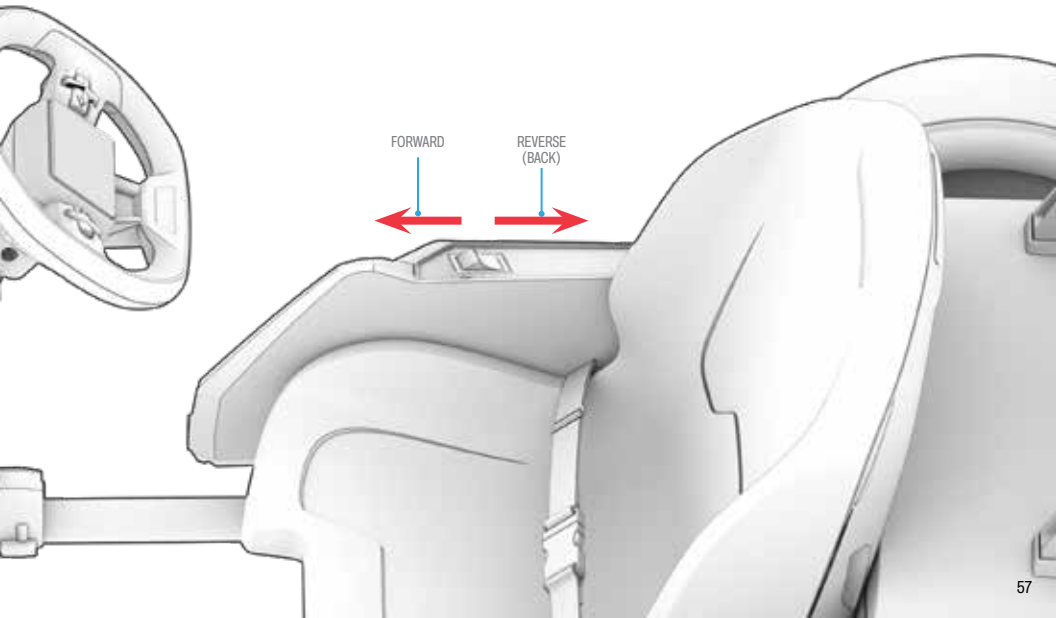

4.6 Using Lights & Sounds

LIGHTS

TO TURN ON THE LIGHTS: TOGGLE THE LIGHTING SWITCH TO "ON."
TO TURN OFF THE LIGHTS: TOGGLE THE LIGHTING SWITCH TO "OFF."

SOUNDS

PRESS A HORN BUTTON TO SOUND THE HORN.

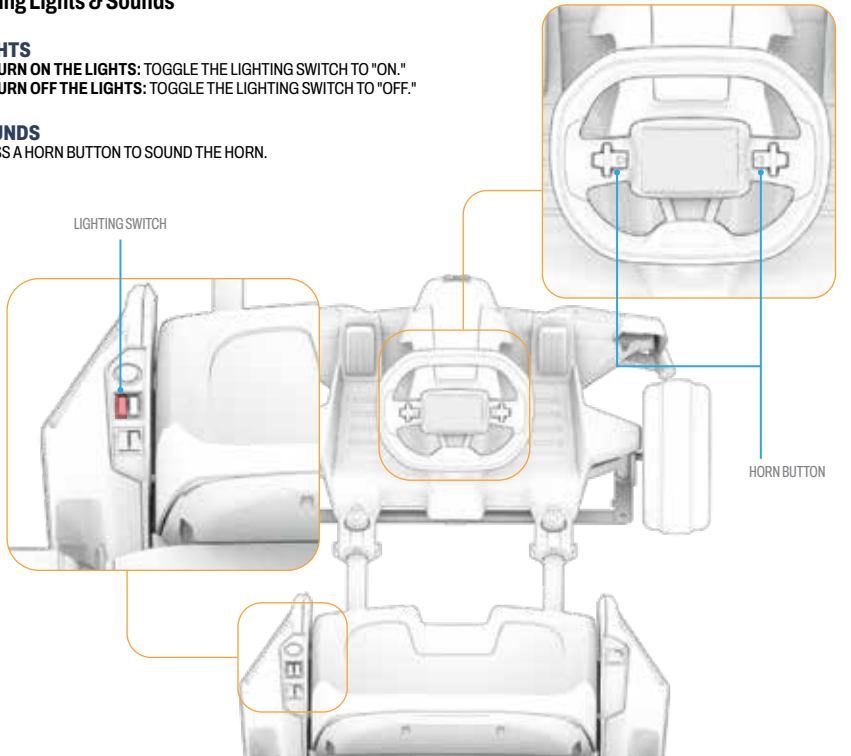

4.7 Checking Battery Charge Level

THE BATTERY CHARGE INDICATOR SCREEN WILL DISPLAY THE REMAINING PERCENTAGE OF AVAILABLE BATTERY CHARGE.

IMPORTANT:

- As an alert that battery charge has dropped to 20% or less, you will hear a "low power" announcement. Stop riding and recharge your go-kart's battery (Section 2.12).
- When the battery charge depletes to 0%, the go-kart will power off. Charge to full power prior to your next ride.

BATTERY INDICATOR ICON							
CHARGE PERCENTAGE	0-10% STOP RIDING AND CHARGE YOUR JETSON!	10-20% CHARGE YOUR JETSON NOW!	20-35%	35-50%	50-65%	65-80%	80-100%

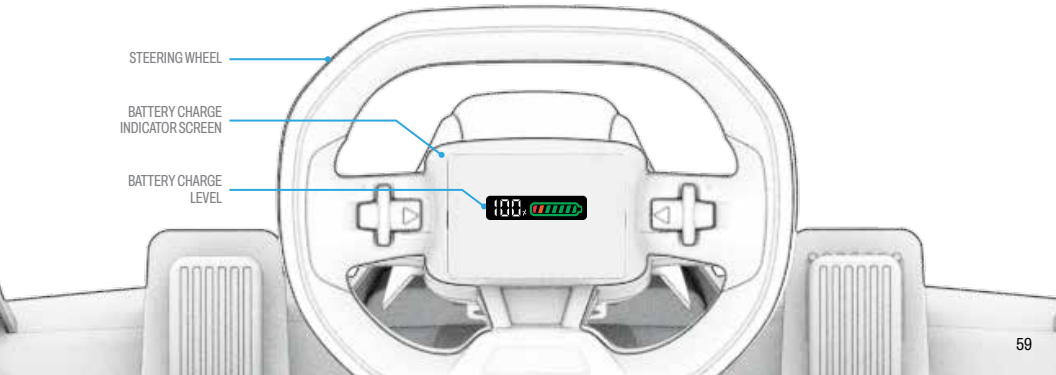

4.8 Maximizing Speed & Run Time

IN IDEAL CONDITIONS, THE MAXIMUM SPEED THAT CAN BE ACHIEVED IS 14 MILES PER HOUR (MPH) AND THE MAXIMUM RUN TIME PER BATTERY CHARGE IS 25 TO 60 MINUTES, DEPENDING ON THE AVERAGE SPEED TRAVELED.*.

THE HARDER THE MOTOR NEEDS TO WORK, THE FASTER YOUR BATTERY WILL DRAIN AND THE HARDER IT WILL BE TO REACH AND MAINTAIN TOP SPEEDS. THE FOLLOWING FACTORS WILL ALSO AFFECT HOW FAST YOU CAN TRAVEL AND HOW LONG CAN RIDE FROM A SINGLE CHARGE.

Riding Surface
- TRAVELING OVER A ROUGH SURFACE CAUSES FRICTION, WHICH CAN SLOW YOU DOWN AND REQUIRES THE MOTOR TO WORK HARDER, WHICH DRAINS IT FASTER. WHEN POSSIBLE, CHOOSE A SMOOTH RIDING SURFACE.

Carrying Weight
- MORE CARRYING WEIGHT DECREASES ACHIEVABLE SPEED AND RUN TIME.

Riding Style
- FREQUENT STARTING AND STOPPING WILL REDUCE RUN TIME.

Air Temperature
- THE IDEAL TEMPERATURE FOR RIDING AND STORING THE GO-KART IS BETWEEN 50-75°F (10-23.9°C).

Incline
- THE MOTOR HAS TO WORK HARDER WHEN YOU RIDE UPHILL, AND GOING AGAINST GRAVITY MAKES IT HARD TO HIT THE MAXIMUM ACHIEVABLE SPEED. RIDE ON FLAT SURFACES WHEN POSSIBLE.

Battery maintenance
- TIMELY BATTERY CHARGING AFTER EVERY RIDE HELPS MAINTAIN BATTERY CAPACITY AND STRENGTH.

Speed Setting
- TRAVELING AT SLOW SPEED WILL RESULT IN A LONGER RUNTIME THAN TRAVELING AT A FAST SPEED.

Riding Mode
- CONTINUOUS USE OF DRIFT MODE CAN RAPIDLY DEPLETE BATTERY CHARGE.

IMPORTANT: WHEN THE GO-KART IS PUSHED BEYOND ITS INTENDED USE, AS A SAFETY MECHANISM THE MOTOR WILL PERFORM AN AUTOMATIC SHUT-DOWN. IN CASES OF AUTOMATIC SHUT-DOWN, LET THE MOTOR COOL OFF FOR 3 SECONDS BEFORE POWERING ON AND RIDING AGAIN.

USER MAINTENANCE INSTRUCTIONS.

Take good care of your Jetson to keep it riding smoothly and safely. Here's how:

Handling Your Jetson:

- AVOID EXPOSING YOUR PRODUCT TO SEVERE VIBRATION OR INTENSE PHYSICAL IMPACT.
- NEVER DISASSEMBLE THE BATTERY.
- KEEP YOUR PRODUCT AWAY FROM WATER AND MOISTURE.
- RIDE ON SMOOTH, FLAT SURFACES TO AVOID BREAKAGE.
- NEVER CARRY YOUR PRODUCT BY THE WHEELS, SEAT, AND/OR STEERING WHEEL.
- TAKE CARE NOT TO PULL OR SNAG THE WIRING CONNECTING THE MOTOR WITH THE STEERING WHEEL COMPONENTS.

Storage Instructions:

- FULLY CHARGE THE BATTERY BEFORE STORING THE PRODUCT FOR EXTENDED PERIODS OF TIME.
- WHEN IN STORAGE FOR EXTENDED PERIODS OF TIME, FULLY CHARGE THE BATTERY ONCE A MONTH.
- COVER THE PRODUCT TO PROTECT IT AGAINST DUST.
- STORE THE PRODUCT INDOORS AND IN A DRY PLACE AT A TEMPERATURE BETWEEN 50°F - 75°F (10°C - 23.9°C).

Cleaning Your Jetson:

- SEAT AND FRAME - WIPE WITH A DAMP DUST-FREE CLOTH OR ONE DIPPED IN RUBBING ALCOHOL. FOLLOW WITH A DRY DUST-FREE CLOTH.
- STEERING WHEEL - WIPE DOWN WITH MILD SOAP USING A DAMP DUST-FREE CLOTH. REMOVE EXCESS SOAP WITH A SEPARATE DAMP CLOTH.
- WHEEL COMPONENTS - WIPE WITH A DAMP DUST-FREE CLOTH.

⚠ **WARNING:** Do not spray or apply water directly onto to the product. Water can cause damage to the wiring, battery compartment, and lights, as well as deterioration of the frame—all of which could cause a malfunction that puts rider safety at risk.

⚠ Battery Precautions:

YOUR PRODUCT HAS A LITHIUM-ION BATTERY. TAKE CARE WHEN HANDLING.

- KEEP PRODUCT AWAY FROM FIRE AND EXCESSIVE HEAT.
- AVOID INTENSE PHYSICAL SHOCK, SEVERE VIBRATION, OR IMPACT.
- PROTECT PRODUCT FROM WATER OR MOISTURE.
- DO NOT PLACE OR STORE PRODUCT IN A PILE ON TOP OF OR UNDERNEATH OTHER OBJECTS.
- DO NOT DISASSEMBLE THE PRODUCT OR ITS BATTERY.
- DO NOT DISPOSE OF PRODUCT WITH EVERYDAY TRASH. BRING PRODUCT TO A DEDICATED E-WASTE FACILITY OR BATTERY RECYCLING CENTER. FOR MORE INFORMATION ON DISPOSAL SITES NEAR YOU, CONTACT YOUR LOCAL MUNICIPALITY OR WASTE HAULER.
- SHOULD THE PRODUCT'S BATTERY FEEL HOT OR EXHIBIT SIGNS OF OVERHEATING, EMIT AN ODOR OR UNUSUAL SOUND, LEAK FLUID OR GAS, OR CHANGE IN SHAPE OR COLOR, IMMEDIATELY:
  1. IF IN USE, STOP USING THE PRODUCT IMMEDIATELY. REMOVE THE CHARGING CABLE FROM THE PRODUCT IF IT IS PLUGGED IN.
  2. DISCONTINUE USE OF THE PRODUCT.
  3. IF SAFE TO DO SO, MOVE THE PRODUCT INTO A CLEAR SPACE AND AWAY FROM ANYTHING FLAMMABLE.
  4. CALL YOUR LOCAL EMERGENCY SERVICES FOR ASSISTANCE
  5. THOROUGHLY WASH EYES OR AREAS OF SKIN THAT HAVE COME IN CONTACT WITH LEAKING BATTERY ELECTROLYTE FLUID WITH CLEAN RUNNING WATER AND SEEK ADDITIONAL MEDICAL ATTENTION.
- IF THERE ARE ANY ISSUES WITH THE BATTERY, CONTACT THE JETSON CARE TEAM.

LOVING YOUR RIDE?

Leave a review at
ridejetson.com/reviews.
We can't wait to hear from you!
#MakeMoves

CONNECT WITH US.

RIDEJETSON.COM/SUPPORT
RIDEJETSON.COM/CHAT

1-844-585-7462

Be sure to follow @ridejetson on social media to learn about fantastic offers, giveaways, and all the latest Jetson news.


JETSON