JETSON

Vega

Kids' 12V Ride-On

A guide for your ride.

IMPORTANT: READ CAREFULLY AND RETAIN FOR FUTURE REFERENCE.

MODEL SKU: JVEGA-WHT

Jetson's top two riding rules:
Be safe. Have fun!

Contents

Safety Warnings 4

Warranty Coverage 7

1. About Your Product

1.1 What's in the Box 8

1.2 Product Overview 12

1.3 Product Specs 14

1.4 Online Resources 15

2. Getting Started

2.1 Starting Notes 17

2.2 Attaching the Front Wheels 18

2.3 Attaching the Rear Wheels 21

2.4 Inserting the Seat 24

2.5 Assembling & Attaching the Tailstock 29

2.6 Attaching the "Spare" Wheel 33

2.7 Attaching the Steering Wheel 35

2.8 Attaching the Windshield 38

2.9 Connecting the Battery 40

2.10 Charging the Battery 41

3. Making Moves

3.1 Opening & Closing the Doors 43

3.2 Fastening the Seatbelt 43

3.3 Using the Remote Control 44

3.4 A Guide to Your Dashboard & Controls 46

3.5 Maximizing Speed & Run Time 48

4. Safe Journeying

4.1 Pre-Ride Safety Checks 49

4.2 Helmet Safety 50

4.3 Care & Maintenance 51

Safety Warnings

- Before use, please read the user manual and safety warnings carefully, and make sure you understand and accept all the safety instructions. The user will be responsible for any loss or damage caused by improper use.
- **Failure to use correct charger can result in fire and explosion, resulting in property damage, injury, and death.**
- Before each cycle of operation, the operator shall perform the preoperation checks specified by the manufacturer:
  That all guards and pads originally supplied by the manufacturer are in proper place and in serviceable condition;
  That the braking system is functioning properly; That any and all axle guards, chain guards, or other covers or guards supplied by the manufacturer are in place and in serviceable condition; That tires are in good condition, inflated properly, and have sufficient tread remaining; The area that the product is to be operated should be safe and suitable for safe operation.
- Components shall be maintained and repaired in accordance with the manufacturer's specifications and using only the manufacturer's authorized replacement parts with installation performed by dealers or other skilled persons.
- Don't allow hands, feet, hair, body parts, clothing, or similar articles to come in contact with moving parts, wheels, or drive train, while the bike is in use.
- This product should not be used by children or persons with reduced physical, sensory or mental capabilities, or lack of experience and knowledge, unless they have been given supervision or instruction (IEC 60335-1/A2:2006).
- Unsupervised children should not play with the product (IEC 60335-1/A2:2006).
- Adult supervision is required.
- The rider should not exceed 110 lbs.
- Never use near motor vehicle.
- Units shall not be operated to perform racing, stunt riding, or other maneuvers, which may cause loss of control, or may cause uncontrolled operator/passenger actions or reactions.
- Avoid sharp bumps, drainage grates, and sudden surface changes. Bike may suddenly stop.
- Avoid streets and surfaces with water, sand, gravel, dirt, leaves, and other debris. Wet weather impairs traction, braking and visibility.
- Avoid riding around flammable gas, steam, liquid, or dust that could cause fire.
- Operators shall adhere to all of the manufacturer's recommendations and instructions, as well as comply with all laws and ordinances: Units without headlights shall be operated only with adequate daylight conditions of visibility, and; Owners shall be encouraged to highlight (for conspicuity) using lighting, reflectors, and for low-riding units, signal flags on flexible poles.
- Do not ride at night.
- Only ride the product with adequate daylight conditions for visibility.
- Persons with the following conditions shall be cautioned not to operate: Those with heart conditions; Pregnant women;
  Persons with head, back, or neck ailments, or prior surgeries to those areas of the body; and persons with any mental or physical conditions that may make them susceptible to injury or impair their physical dexterity or mental capabilities to recognize, understand, and perform all of the safety instructions and to be able to assume the hazards inherent in unit use.
- Do not ride after drinking or taking prescription medication.
- Do not carry items when riding.
- Never operate the product barefooted.
- Always wear shoes and keep shoelaces tied.
- Make sure your feet are always placed securely on the pedals.
- Operators always shall use appropriate protective clothing, including but not limited to a helmet, with appropriate certification, and any other equipment recommended by the manufacturer: Always wear protective equipment such as helmet, knee pads, and elbow pads.
- Always give way to pedestrians.
- Be alert to things in front and far away from you.
- Do not allow distractions when riding, such as answering the phone or engaging in any other activities.
- The product cannot be ridden by more than one person.
- When you ride the product along with other riders, always keep a safe distance to avoid a collision.
- When turning, be sure to maintain your balance.
- Riding with improperly adjusted brakes is dangerous and can result in serious injury or death.

- Applying brakes too hard or too suddenly can lock up a wheel, which could cause you to lose control and fall. Sudden or excessive application of the brake may result in injury or death.
- If the brake loosens, please adjust with the hexagon wrench, or please contact the Jetson Care Team.
- Replace worn or broken parts immediately.
- The area that the product is to be operated should be safe and suitable for safe operation.
- Check whether all safety labels are in place and understood before riding.
- The owner shall allow the use and operation of the unit after a demonstration that such operators can understand and operate all components of the unit before use.
- Use caution when changing the batteries. Do not change batteries near flammable materials. Remove batteries from the ride-on toy when not in use for long periods of time.
- Prolonged exposure to UV rays, rain and the elements may damage the enclosure materials, store indoors when not in use.
- Devices are not intended for use at elevations greater than 2000 m above sea level.
- WARNING – Risk of Fire and Electric Shock – No User Serviceable Parts.

MODIFICATIONS

Do not attempt to disassemble, modify, repair, or replace the product or any components of the unit without instruction from the Jetson Care Team. This will void any warranty, and can lead to malfunctions which may cause injury.

ADDITIONAL OPERATION PRECAUTIONS

- Do not lift the product off the ground while it is on and the wheels are in motion. This can result in freely spinning wheels, which may cause injury to yourself or others nearby.
- Do not jump on or off the product, and do not jump while using it.
- Always keep your feet firmly planted while in operation.
- The Consumer Product Safety Commission advises that the riding of small wheel diameter ride-on toy at excessive speeds can lead to instability and is not recommended.
- Always wear a properly fitted helmet when you ride your ride-on toy. Do not ride at night. Avoid riding in wet conditions.

MAINTENANCE PRECAUTIONS

For all maintenance repairs and needs beyond the capability of the consumer which may include but not limited to such as proper maintenance of brakes, control cables, bearing adjustments, wheel adjustments, lubrication, reflectors, wheels and handlebar, remote, motors, remote control, gas pedal and seat adjustments, please contact the Jetson Care Team for assistance at:

ridejetson.com/chat
ridejetson.com/support
US & Canada 1-(888) 976-9904

DISPOSAL OF USED BATTERY



Battery may contain hazardous substances which could endanger the environment and human health. This symbol marked on the battery and/or packaging indicates that used battery shall not be treated as municipal waste. Batteries should be disposed of at an appropriate collection point for recycling. By ensuring the used batteries are disposed of correctly, you will help preventing potential negative consequences for the environment and human health. The recycling of materials will help to conserve natural resources. For more information about recycling of used batteries, please contact your local municipality waste disposal service.

NOTICE OF COMPLIANCE

This device complies with Part 15 of the FCC Rules. Operation is subject to the following two conditions: (1) this device may not cause harmful interference, and (2) this device must accept any interference received, including interference that may cause undesired operation.

WARNING: Changes or modifications to this unit not expressly approved by the party responsible for compliance could void the user's authority to operate the equipment.

NOTE: This equipment has been tested and found to comply with the limits for a Class B digital device, pursuant to Part 15 of the FCC Rules. These limits are designed to provide reasonable protection against harmful interference in a residential installation. This equipment generates, uses and can radiate radio frequency energy and, if not installed and used in accordance with the instructions, may cause harmful interference to radio communications. However, there is no guarantee that interference will not occur in a particular installation. If this equipment does cause harmful interference to radio or television reception, which can be determined by turning the equipment off and on, the user is encouraged to try to correct the interference by one or more of the following measures:

- Reorient or relocate the receiving antenna.
- Increase the separation between the equipment and receiver.
- Connect the equipment into an outlet on a circuit different from that to which the receiver is connected.
- Consult the dealer or an experienced radio/TV technician for help.
- Shielded cables must be used with this unit to ensure compliance with the Class B FCC limits.

FCC ID:
Changes or modifications not expressly approved by the party responsible for compliance could void the user's authority to operate the equipment.

This device complies with Part 15 of the FCC Rules. Operation is subject to the following two conditions: (1) this device may not cause harmful interference, and (2) this device must accept any interference received, including interference that may cause undesired operation.

This equipment has been tested and found to comply with the limits for a Class B digital device, pursuant to Part 15 of the FCC Rules. These limits are designed to provide reasonable protection against harmful interference in a residential installation. This equipment generates, uses and can radiate radio frequency energy and, if not installed and used in accordance with the instructions, may cause harmful interference to radio communications.

However, there is no guarantee that interference will not occur in a particular installation. If this equipment does cause harmful interference to radio or television reception, which can be determined by turning the equipment off and on, the user is encouraged to try to correct the interference by one or more of the following measures:

- Reorient or relocate the receiving antenna.
- Increase the separation between the equipment and receiver.
- Connect the equipment into an outlet on a circuit different from that to which the receiver is connected.
- Consult the dealer or an experienced radio/TV technician for help.

California Proposition 65

⚠WARNING:

This product can expose you to chemicals including Cadmium, which is known to the State of California to cause cancer and birth defects or other reproductive harm. For more information go to: www.P65Warnings.ca.gov.

Warranty Coverage

GENERAL LIMITED WARRANTY
Your new Jetson product is warranted against defects in materials and workmanship as indicated on ridejetson.com/warranty for a period of time from the date of original retail purchase when used in accordance with Jetson's user manuals (refer to ridejetson.com/support). **Under this warranty, you will be able to direct your claims to Jetson even in situations where you purchased the Jetson Product from one of our authorized retailers.** To read the full terms of our warranty, visit ridejetson.com/warranty.

1. About Your Product

1.1 What's in the Box

A. FRAME
B. CHARGER
C. WHEEL (X4)
D. HUBCAP (X5)
E. SEAT BACK
F. SEAT BASE WITH SEATBELT
G. CENTER TAILSTOCK PIECE
H. LEFT TAILSTOCK PIECE
I. RIGHT TAILSTOCK PIECE
J. "SPARE" WHEEL
K. STEERING WHEEL*
L. WINDSHIELD
M. REMOTE CONTROL

*HARDWARE PRE-INSTALLED. REFER TO ASSEMBLY INSTRUCTIONS FOR MORE DETAILS.

A

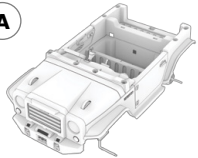

B

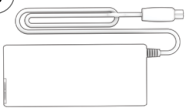

C



(x4)

D



(x5)

E



F

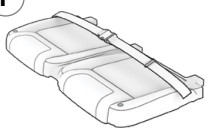

G



H

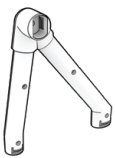

I

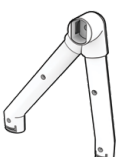

J

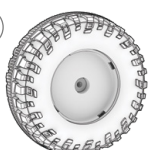

K



L

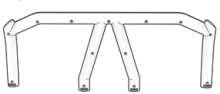

M

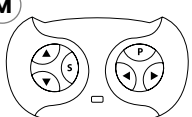

TOOLS AND HARDWARE INCLUDED FOR ASSEMBLY, ADJUSTMENT, AND MAINTENANCE:

N. M12 X 23 WASHER
(X8, INCLUDING 2 SPARE)
O. M10 AXLE NUT
(X6, INCLUDING 2 SPARE)
P. M4 X 16MM SCREW (X4)

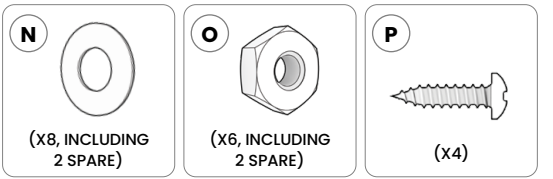

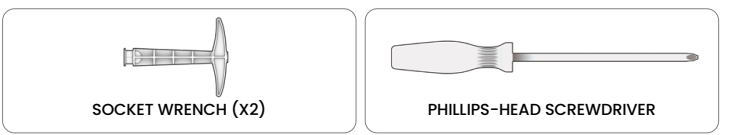

1.2 Product Overview

1. FRONT WHEEL (X2; LEFT AND RIGHT)
2. REAR WHEEL (X2; LEFT AND RIGHT)
3. LED LIGHT-UP GRILL
4. LED HEADLIGHT (X2; LEFT AND RIGHT)
5. DOOR (X2; LEFT AND RIGHT)
6. DOOR LEVER (X2; LEFT AND RIGHT)
7. SEAT WITH SEATBELT
8. STEERING WHEEL
9. DASHBOARD
   - 9A. BATTERY CHARGE INDICATOR SCREEN
   - 9B. DIRECTION SHIFTER
   - 9C. CHARGING PORT
   - 9D. SPEED SWITCH
   - 9E. POWER BUTTON
10. ACCELERATOR PEDAL
11. REMOTE CONTROL
12. CHARGER

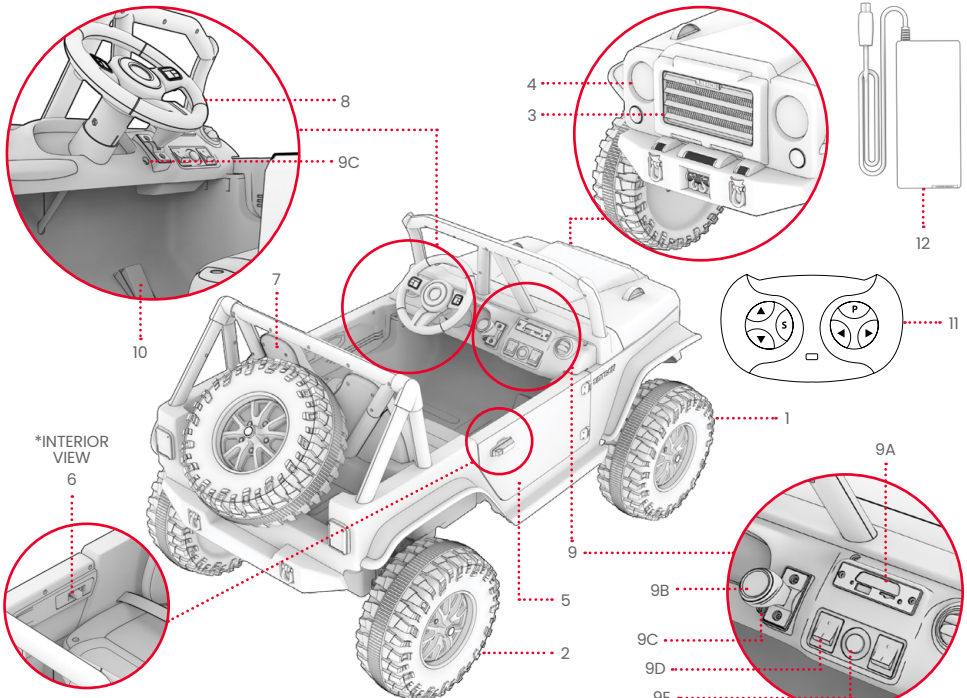

NOTE: IMAGES MAY NOT REFLECT EXACT APPEARANCE OF ACTUAL PRODUCT.

1.3 Product Specs

- MAX SPEED IN FAST MODE: UP TO 3 MPH
- MAX SPEED IN LOW MODE: UP TO 2 MPH
- RUN TIME: UP TO 45 MINS
- BATTERY: RECHARGEABLE 12V, 7AH LEAD-ACID
- REMOTE CONTROL BATTERIES: 2 AAA (NOT INCLUDED)
- MOTOR: 35W (X2)
- PRODUCT WEIGHT: 48.5 LB
- PRODUCT DIMENSIONS: 51.6″ (L) X 29.1″ (W) X 27.6″ (H)
- WHEEL SIZE: 12.5″ × 4.7″
- CHARGER: UL LISTED, DC12V OUTPUT
- CHARGING TIME: UP TO 6 HOURS
- WEIGHT LIMIT: 110 LB
- RECOMMENDED AGE: 3 - 8 YEARS OLD
- NUMBER OF RIDERS: 1

* PRODUCT RUN TIME, SPEED, BATTERY LIFE, AND OTHER SPECIFICATIONS MAY VARY BASED ON RIDER AND RIDING CONDITIONS. SEE SECTION 3.5 FOR MORE DETAILS ON CONDITIONS THAT CAN AFFECT PERFORMANCE.

1.4 Online Resources



Scan for our most updated Vega onboarding materials and support resources.

2. Getting Started

2.1 Starting Notes

- KICK OFF YOUR ADVENTURE RIGHT: PRIOR TO USE OF THIS PRODUCT, CAREFULLY READ THE ENTIRE USER MANUAL, INCLUDING SAFETY WARNINGS. MAKE SURE YOU UNDERSTAND, ACCEPT, AND ADHERE TO ALL:
  - MANUFACTURER'S RECOMMENDATIONS.
  - SAFETY INSTRUCTIONS AND WARNINGS.
  - LOCAL RIDING AND OPERATIONAL LAWS AND ORDINANCES.

- REMOVE ALL PACKAGING BEFORE BEGINNING ASSEMBLY.

- THE DIRECTIONS GIVEN IN THIS MANUAL—RIGHT, LEFT, FRONT/FORWARD, AND REAR/BACK—ARE ORIENTED AS THE RIDER WOULD SEE THEM WHEN SEATED IN THE VEHICLE. THE "RIGHT SIDE" OF THE VEHICLE, FOR EXAMPLE, IS THE SIDE WHERE THE RIDER'S RIGHT HAND AND FOOT WILL BE.

- IT IS HELPFUL TO HAVE AN EXTRA SET OF HANDS TO HELP WITH ASSEMBLY. GRAB AN ASSISTANT!

⚠WARNING:

FAILURE TO COMPLY WITH THE FOLLOWING INSTRUCTIONS MAY RESULT IN INJURY TO THE CHILD OR OTHERS.
- KEEP SMALL PARTS AWAY FROM CHILDREN DURING ASSEMBLY.
- ACCESSORY MUST BE ASSEMBLED AND REMOVED BY AN ADULT.
- FREQUENTLY INSPECT THE PRODUCT FOR DAMAGE.

* ADULTS MUST ASSIST CHILDREN IN THE ASSEMBLY AND INITIAL ADJUSTMENT PROCEDURES OF THE PRODUCT.

2.2 Attaching the Front Wheels

1. CAREFULLY FLIP THE FRAME (A) UPSIDE-DOWN AND PLACE IT ON YOUR WORK SURFACE.
2. SLIDE 1 WASHER (M) ONTO EACH SIDE OF THE AXLE (2 TOTAL; LEFT AND RIGHT).
3. LEADING WITH THE GEAR SIDE OF THE WHEEL, SLIDE ONE WHEEL (C) ONTO EACH FRONT AXLE.
4. SLIDE A 2ND WASHER (M) BACK ONTO EACH SIDE OF THE AXLE (2 TOTAL; LEFT AND RIGHT).
5. TWIST 1 AXLE NUT (N) CLOCKWISE ONTO THE END OF EACH AXLE (2 TOTAL; LEFT AND RIGHT). USE THE WRENCH TO TIGHTEN THE AXLE NUTS ONTO THE AXLE.

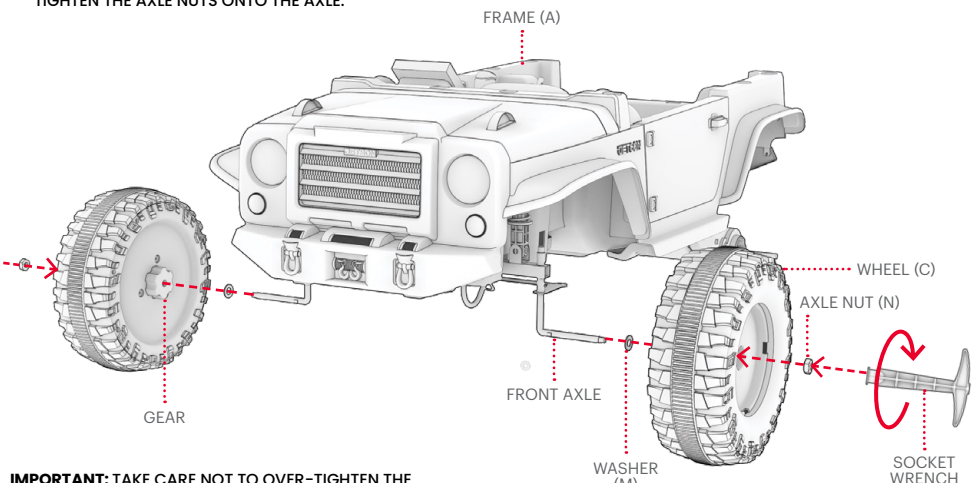

IMPORTANT: TAKE CARE NOT TO OVER-TIGHTEN THE NUT, AS OVER-TIGHTENING CAN CAUSE THE WHEEL TO CRACK. STOP TURNING THE NUTS WITH THE WRENCHES ONCE THERE IS A LOT OF RESISTANCE.

6. ALIGN THE TABS ON 1 HUBCAP (D) WITH THE TAB HOLES IN 1 FRONT WHEEL. POP THE HUBCAP INTO PLACE. REPEAT WITH A 2ND HUBCAP ON THE OTHER FRONT WHEEL. (2 TOTAL; LEFT AND RIGHT)

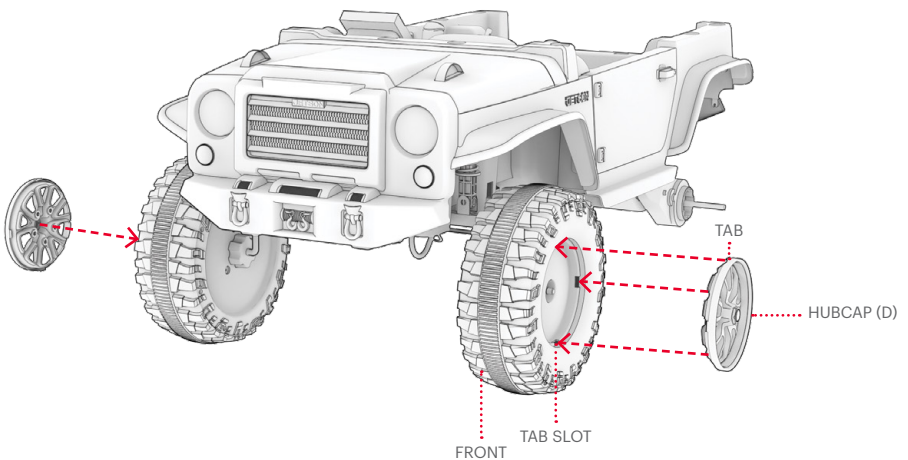

7. CHECK THAT THE FRONT WHEELS ARE SECURE ON THE AXLE AND THE HUBCAPS ARE SECURE ON THE WHEELS.

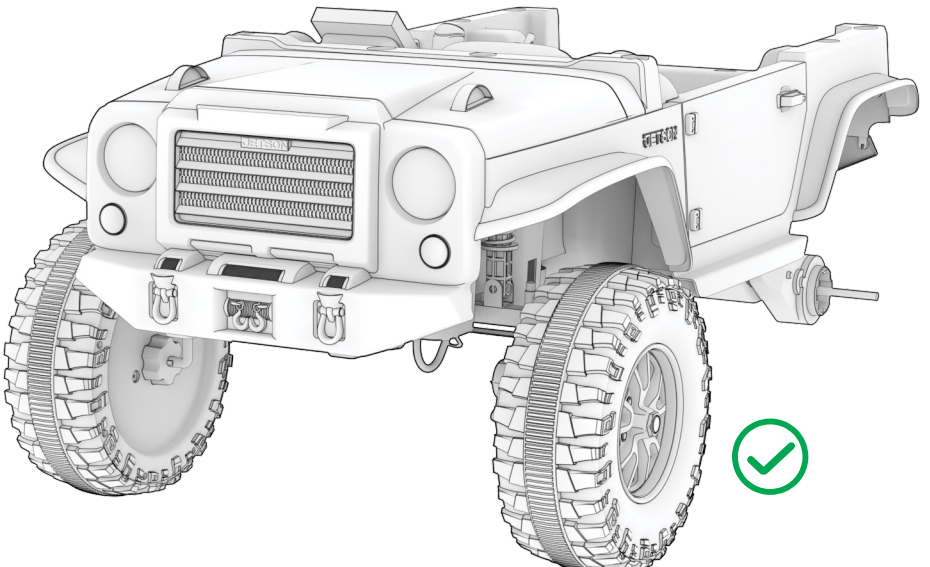

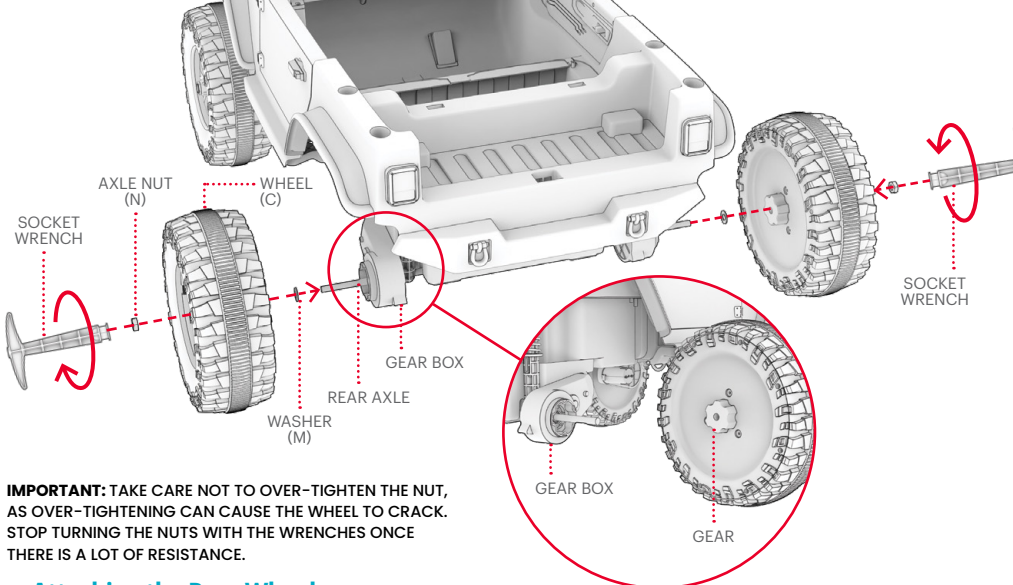

IMPORTANT: TAKE CARE NOT TO OVER-TIGHTEN THE NUT, AS OVER-TIGHTENING CAN CAUSE THE WHEEL TO CRACK. STOP TURNING THE NUTS WITH THE WRENCHES ONCE THERE IS A LOT OF RESISTANCE.

2.3 Attaching the Rear Wheels

1. LEADING WITH THE GEAR SIDE OF THE WHEEL, SLIDE 1 WHEEL (C) ONTO EACH END OF THE REAR AXLE UNTIL THE GEAR FITS SNUGLY IN THE GEAR BOX.
2. SLIDE 1 WASHER (M) ONTO EACH END OF THE REAR AXLE, AND THEN TWIST AN AXLE NUT (N) CLOCKWISE ONTO EACH END OF THE AXLE (2 TOTAL OF EACH; LEFT AND RIGHT).
3. TIGHTEN BOTH AXLE NUTS BY TURNING THEM CLOCKWISE WITH THE WRENCHES AT THE SAME TIME.

⚠ **IMPORTANT:** TO FULLY TIGHTEN THE AXLE NUTS, IT IS NECESSARY TO USE BOTH SOCKET WRENCHES AT THE SAME TIME ON OPPOSITE ENDS OF THE AXLE.

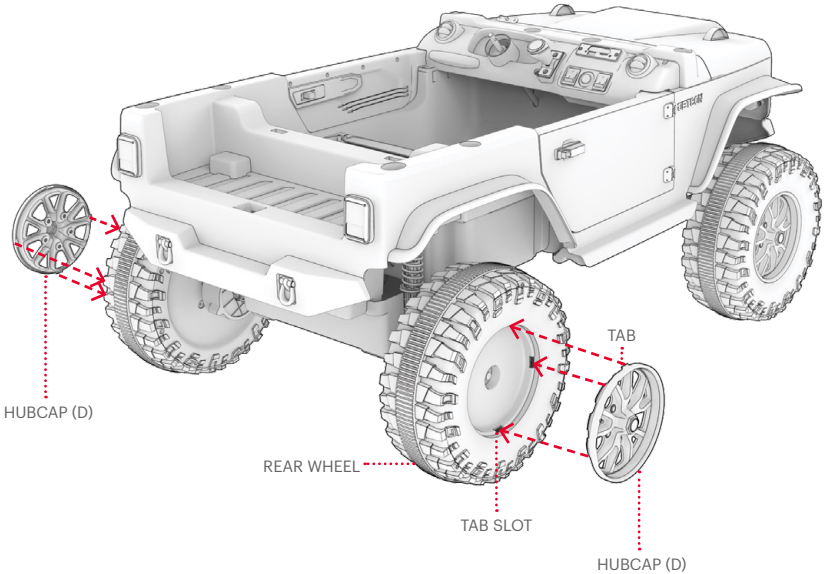

4. ALIGN THE TABS ON 1 HUBCAP (D) WITH THE TAB HOLES IN 1 REAR WHEEL. POP THE HUBCAP INTO PLACE. REPEAT WITH A 2ND HUBCAP ON THE OTHER REAR WHEEL. (2 TOTAL; LEFT AND RIGHT)

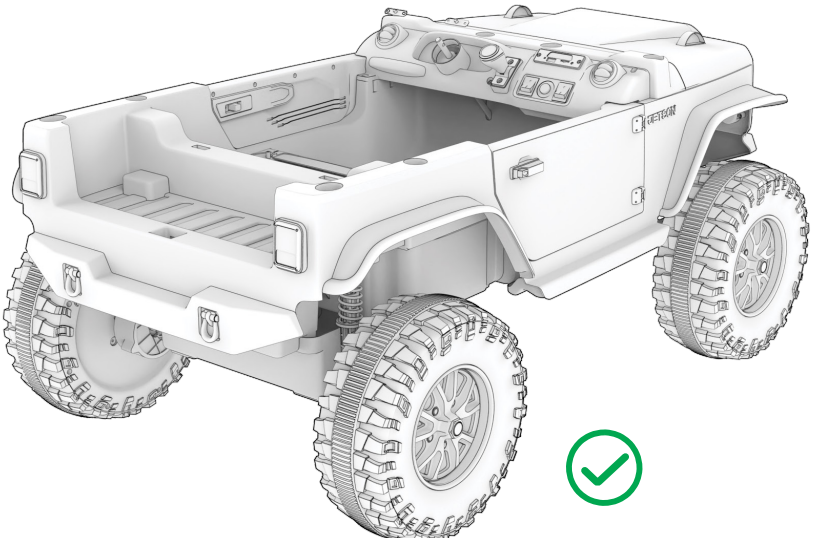

5. CHECK THAT THE REAR WHEELS ARE SECURE ON THE AXLE AND THE HUBCAPS ARE SECURE ON THE WHEELS.

2.4 Inserting the Seat

1. CAREFULLY FLIP THE FRAME (A) OVER SO THAT IT IS UPRIGHT.
2. POSITION THE SEAT BACK (E) ABOVE THE PASSENGER AREA SUCH THAT:
   - THE HEADRESTS ARE AT THE TOP.
   - THE HEADRESTS FACE FORWARD.
   - THE 2 TABS ON THE BACKSIDE OF THE SEAT BACK ARE ALIGNED WITH THE 2 BACK TAB HOLES IN THE CARGO AREA.

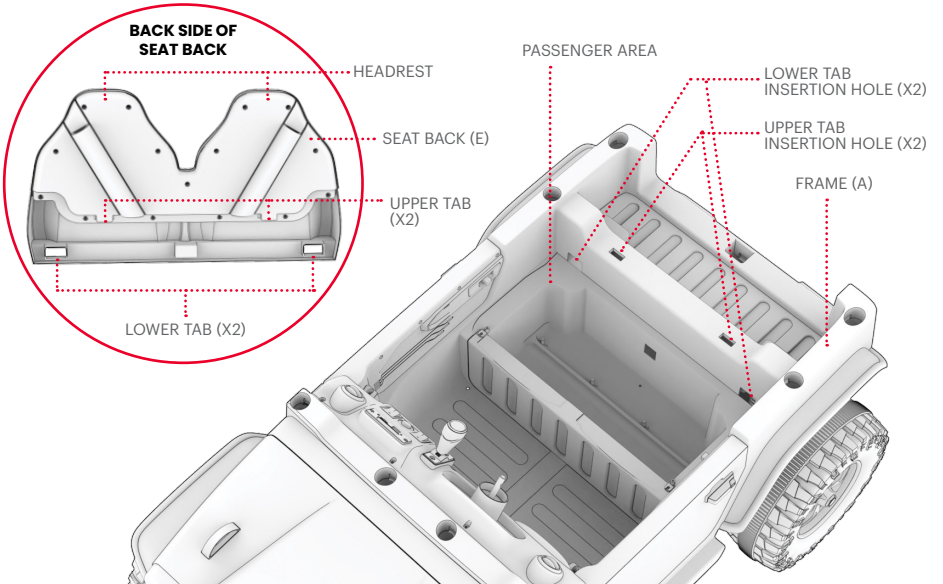

3. GENTLY PUSH THE SEAT BACK INTO THE PASSENGER AREA SUCH THAT THE 2 UPPER TABS CLICK INTO THE 2 TAB HOLES AT THE TOP OF THE FRAME AND THE 2 LOWER TABS CLICK INTO THE 2 TAB HOLES IN THE PASSENGER AREA.

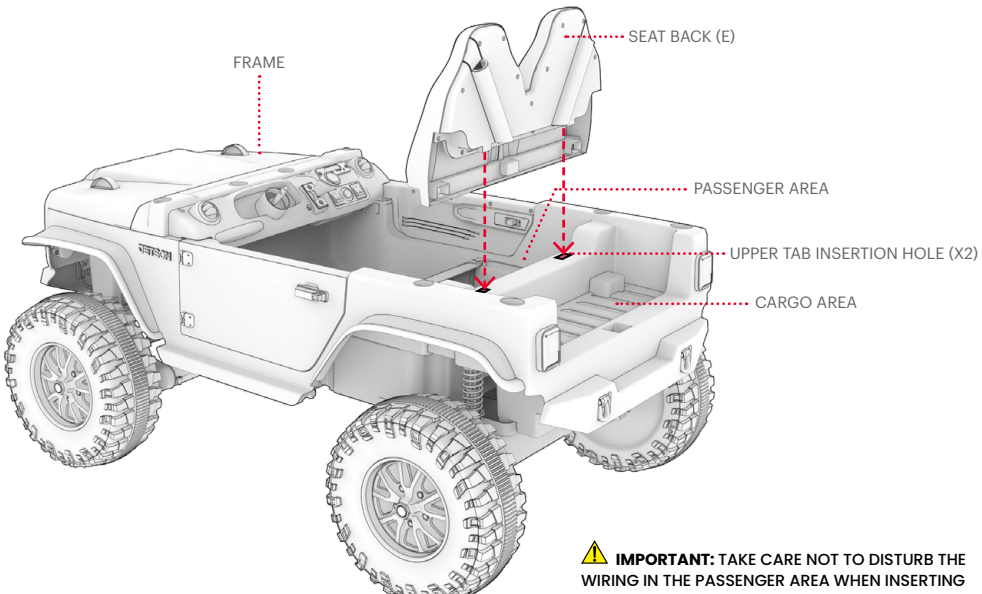

⚠ **IMPORTANT:** TAKE CARE NOT TO DISTURB THE WIRING IN THE PASSENGER AREA WHEN INSERTING THE SEAT COMPONENTS.

4. CHECK THAT THE SEAT BACK IS SECURE IN THE FRAME.
5. POSITION THE SEAT BASE (F) ABOVE THE PASSENGER AREA SUCH THAT:
   - THE SEATBELT IS ON THE TOP SIDE.
   - THE 3 TABS AT THE BACK OF THE SEAT BASE ARE ALIGNED WITH THE 3 TAB HOLES AT THE BOTTOM OF THE SEAT BACK.

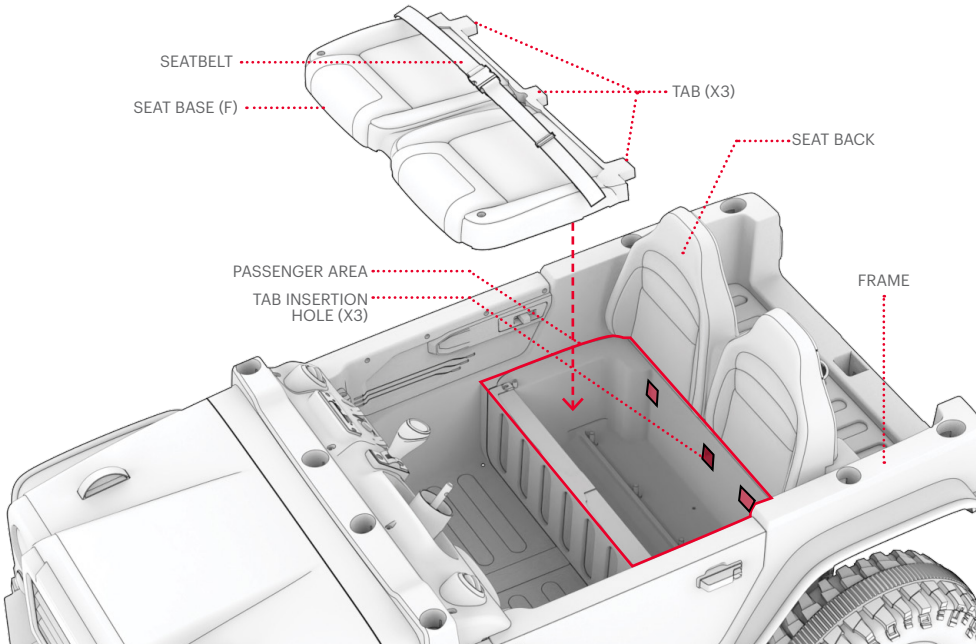

6. ENSURE THAT THE SEATBELT STRAPS ARE NOT DANGLING BELOW THE SEAT BASE. SLIGHTLY TILT THE FRONT OF THE SEAT BASE UP AND PUSH IT BACK UNTIL THE 3 TABS ARE FULLY INSERTED IN THE 3 TAB HOLES.
7. LOWER THE FRONT OF THE SEAT BASE SO THAT
   • IT SITS FLUSH IN THE PASSENGER AREA.
   • THE TWO SCREW HOLES IN THE FRONT CORNERS OF THE SEAT BASE ARE ALIGNED WITH THE 2 SCREW HOLES IN THE PASSENGER AREA.

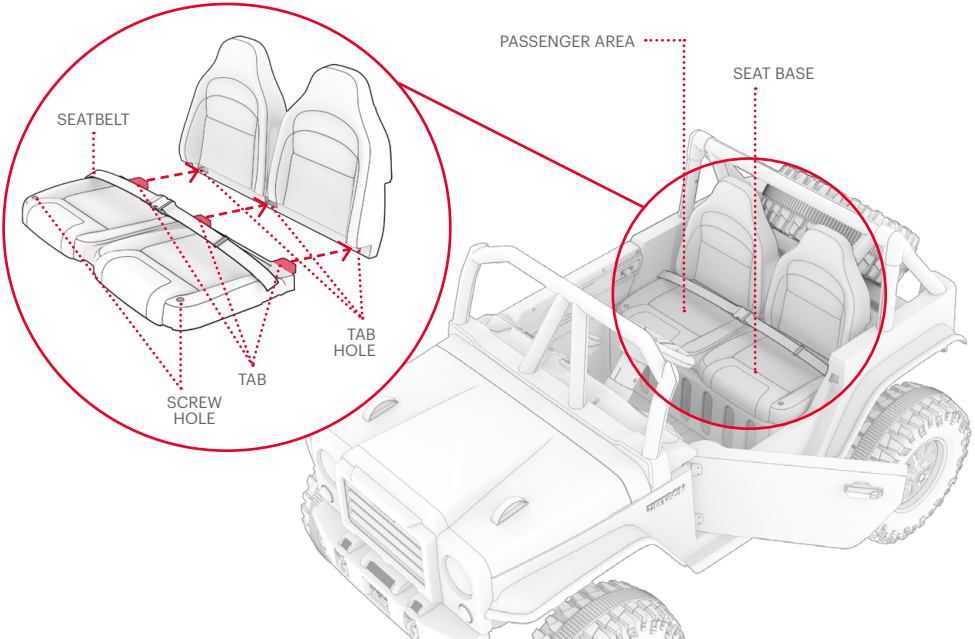

8. INSERT 1 SCREW (O) INTO EACH SET OF ALIGNED HOLES BY TURNING IT CLOCKWISE. (2 TOTAL; 1 LEFT & 1 RIGHT)
9. TIGHTEN THE SCREWS WITH THE PHILLIPS-HEAD SCREWDRIVER.
10. CHECK THAT THE SEAT BASE IS SECURE IN THE FRAME.

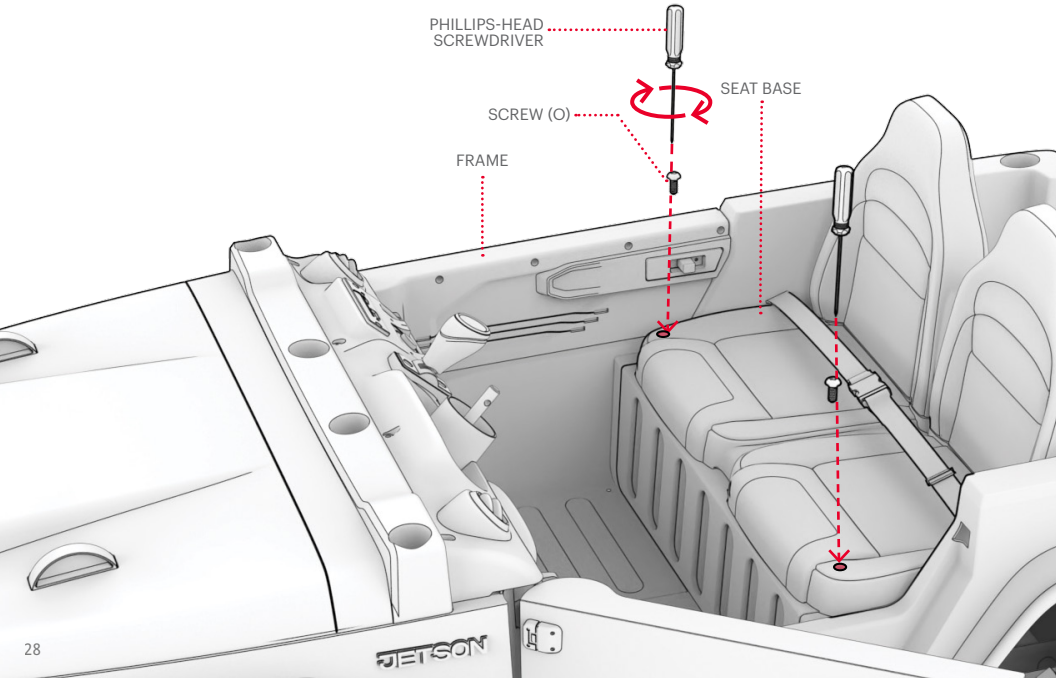

2.5 Assembling & Attaching the Tailstock

1. CLICK THE LEFT TAILSTOCK (G) AND RIGHT TAILSTOCK (H) ONTO THE CENTER TAILSTOCK (I).

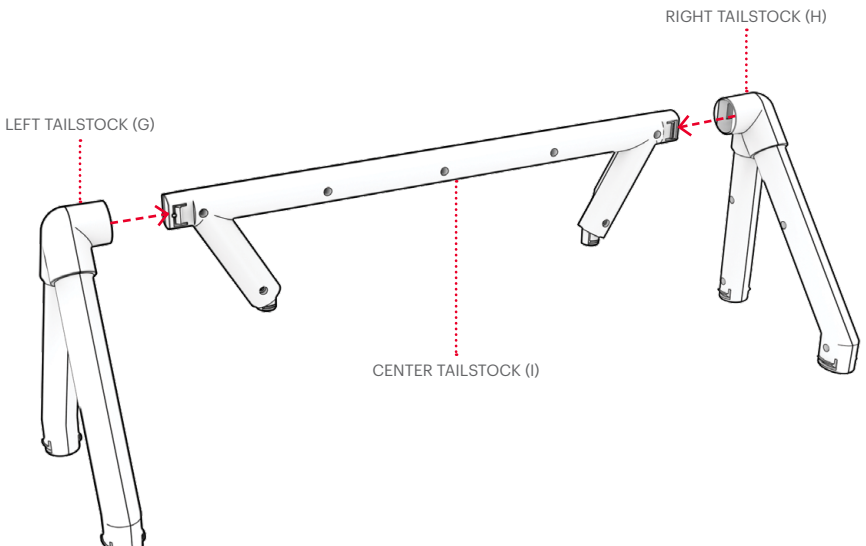

2. POSITION THE TAILSTOCK ABOVE THE CARGO AREA SUCH THAT:
   • THE 4 TAILSTOCK LEGS ARE POINTING DOWN AND ALIGNED WITH THE 4 HOLES AROUND THE CARGO AREA.
   • THE LEFT TAILSTOCK IS ON THE LEFT SIDE OF THE CARGO AREA AND THE RIGHT TAILSTOCK IS ON THE RIGHT SIDE OF THE CARGO AREA (AS VIEWED FROM BEHIND THE FRAME).
3. PUSH THE TAILSTOCK LEGS INTO THE HOLES UNTIL:
   • THE LEGS CLICK INTO PLACE INSIDE THE FRAME (A) SURROUNDING THE CARGO AREA.
   • THE TAILSTOCK ARMS SLIDE INTO THE TAILSTOCK CHANNELS ON THE BACK SIDE OF THE SEAT BACK.

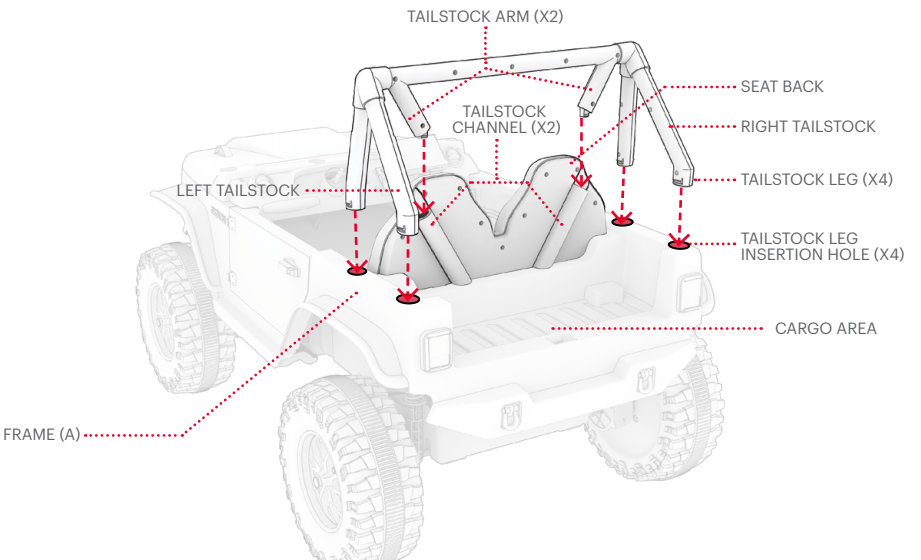

4. ENSURE THAT THE SCREW HOLE IN EACH TAILSTOCK ARM IS ALIGNED WITH THE SCREW HOLES IN THE SEAT BACK. INSERT 1 SCREW (O) INTO EACH SET OF ALIGNED HOLES BY TURNING IT CLOCKWISE. (2 TOTAL; 1 LEFT & 1 RIGHT)
5. TIGHTEN THE SCREWS WITH THE PHILLIPS-HEAD SCREWDRIVER.

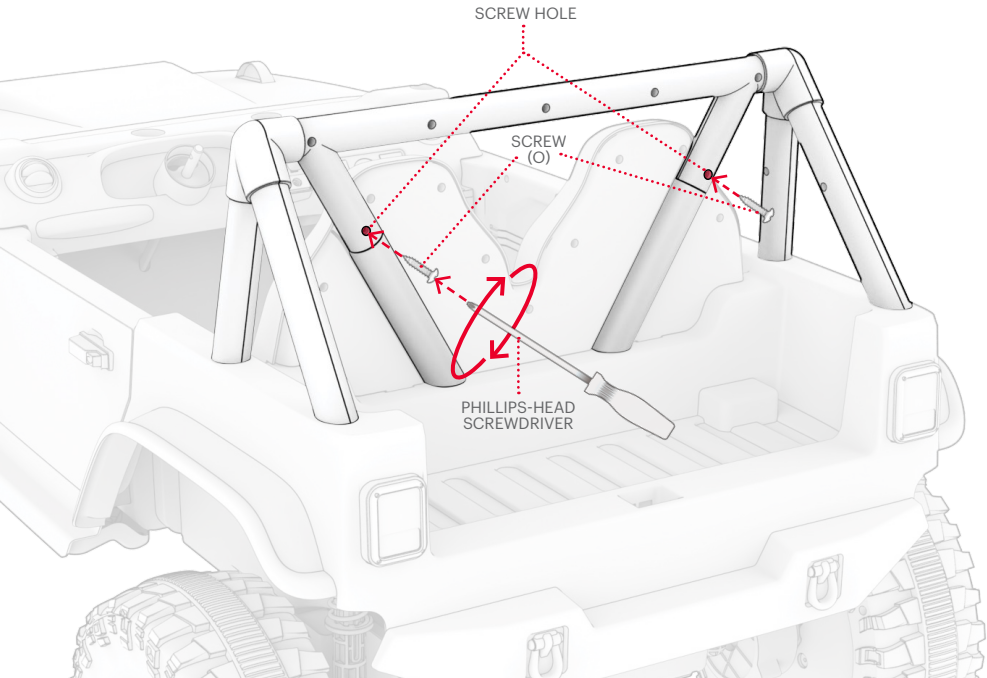

6. CHECK THAT THE TAILSTOCK IS SECURE ON THE FRAME.

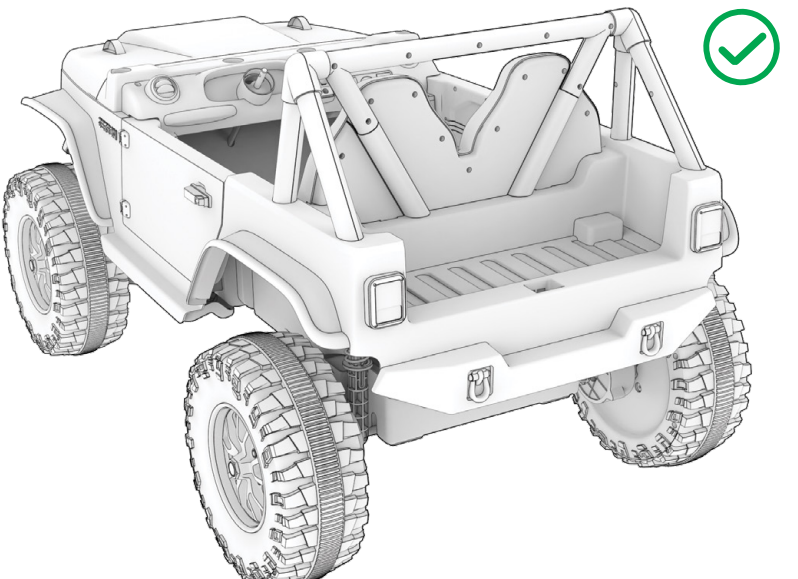

2.6 Attaching the "Spare" Wheel*

1. POSITION THE "SPARE" WHEEL (J) ABOVE THE CARGO AREA SUCH THAT SPARE WHEEL SUPPORT IS FACING DOWN AND THE WHEEL IS TILTED TOWARDS THE TOP OF THE TAILSTOCK.
2. CLICK THE SPARE WHEEL SUPPORT INTO THE HOLE AT THE REAR OF THE CARGO AREA.

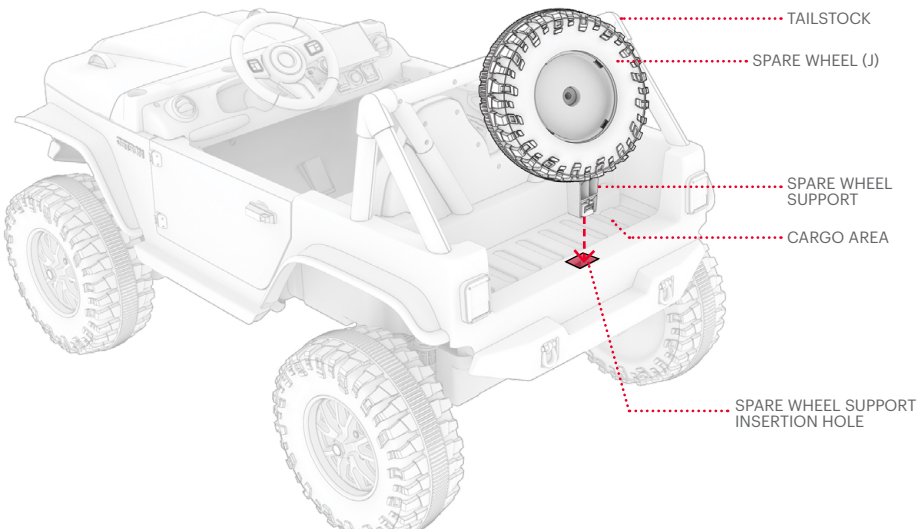

*"SPARE" WHEEL FOR DECORATIVE PURPOSES ONLY.

3. CHECK THAT THE SPARE WHEEL IS SECURE ON THE FRAME (A).
4. ALIGN THE 4 TABS ON 1 HUBCAP (D) WITH THE 4 TAB HOLES IN THE SPARE WHEEL. CLICK THE TABS INTO THE TAB HOLES.
5. CHECK THAT THE HUBCAP IS SECURE ON THE SPARE WHEEL.

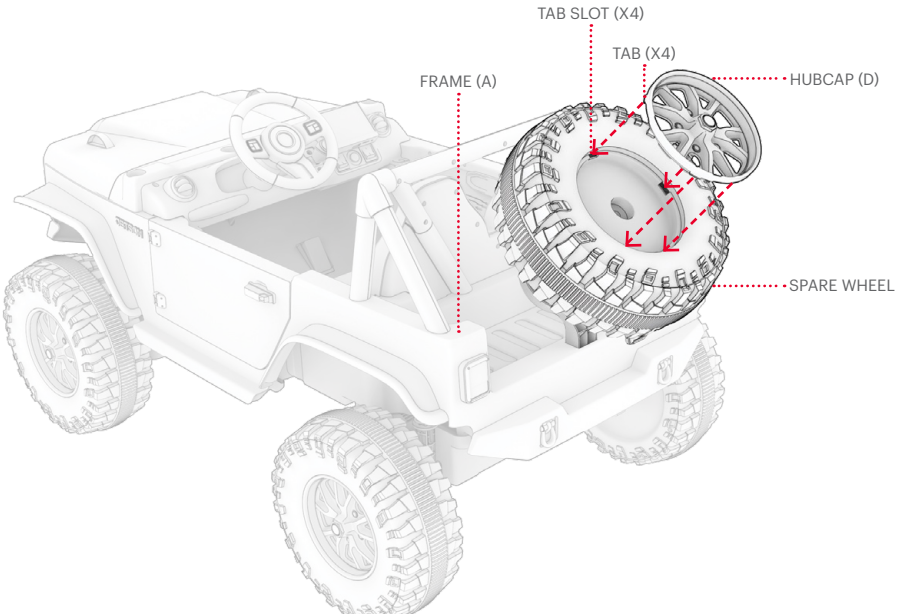

2.7 Attaching the Steering Wheel

IMPORTANT: THE HARDWARE FOR THIS STAGE OF ASSEMBLY IS PRE-INSTALLED ON THE STEERING WHEEL STEM.

1. LOOSEN AND REMOVE THE PRE-INSTALLED BOLT (SIZE M5) FROM THE STEERING WHEEL (K) STEM BY TURNING IT COUNTERCLOCKWISE WITH THE PHILLIPS-HEAD SCREWDRIVER. REMOVE THE NUT (SIZE N7) AND SET THE HARDWARE ASIDE.

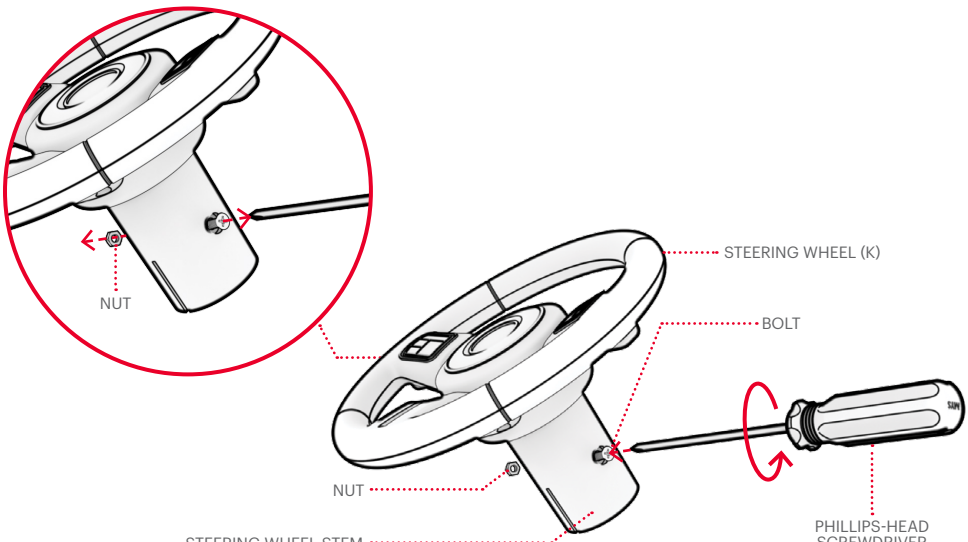

2. SLIDE THE STEERING WHEEL STEM OVER THE STEERING ROD AND INTO THE STEERING TUBE. ROTATE THE STEERING WHEEL UNTIL THE BOLT HOLES IN THE SIDES OF THE STEERING WHEEL STEM ARE ALIGNED WITH THE BOLT HOLES IN THE STEERING ROD.

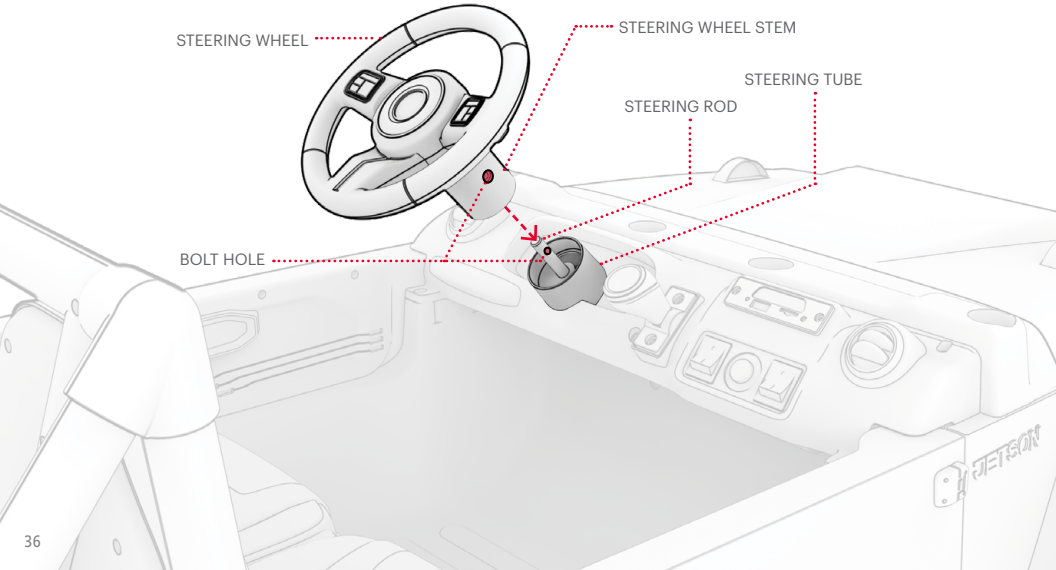

3. RE-INSTALL THE HARDWARE. HOLD THE NUT IN PLACE WHILE YOU INSERT THE BOLT THROUGH THE ALIGNED HOLES OF THE STEERING WHEEL STEM BY TWISTING IT IN CLOCKWISE WITH THE PHILLIPS-HEAD SCREWDRIVER. TIGHTEN THE BOLT INTO THE NUT.
4. CHECK THAT THE STEERING WHEEL IS SECURE IN THE FRAME (A).

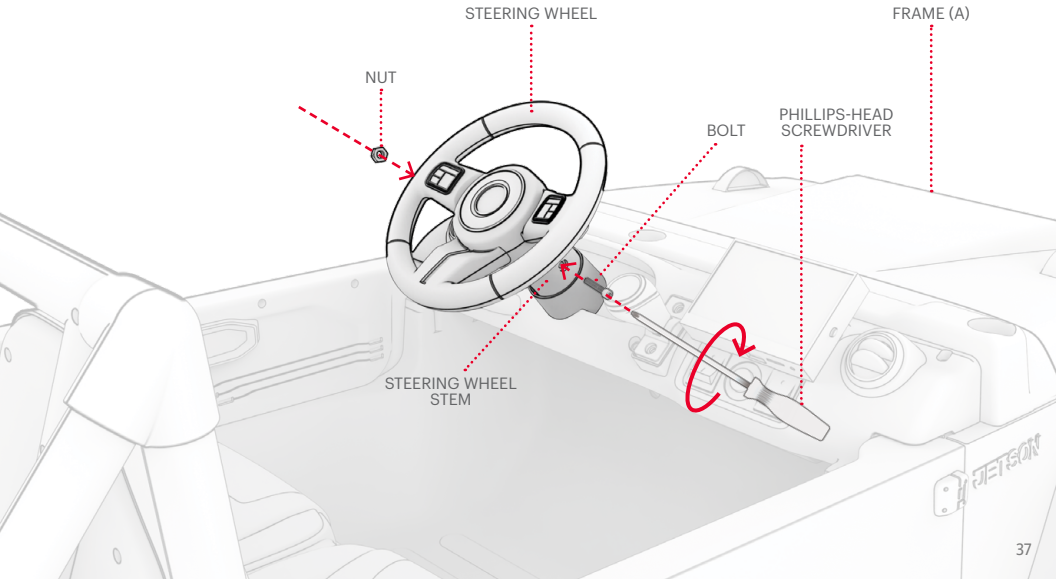

2.8 Attaching the Windshield

1. POSITION THE WINDSHIELD (L) ABOVE THE FRAME (A) SUCH THAT
   • THE 4 WINDSHIELD LEGS ARE POINTING DOWN AND ALIGNED WITH THE 4 HOLES ON THE TOP OF THE FRAME IN FRONT OF THE STEERING WHEEL.
   • THE WINDSHIELD IS TILTED TOWARD THE PASSENGER AREA.
2. PUSH THE WINDSHIELD LEGS INTO THE HOLES UNTIL THE LEGS CLICK INTO PLACE INSIDE THE FRAME (A).

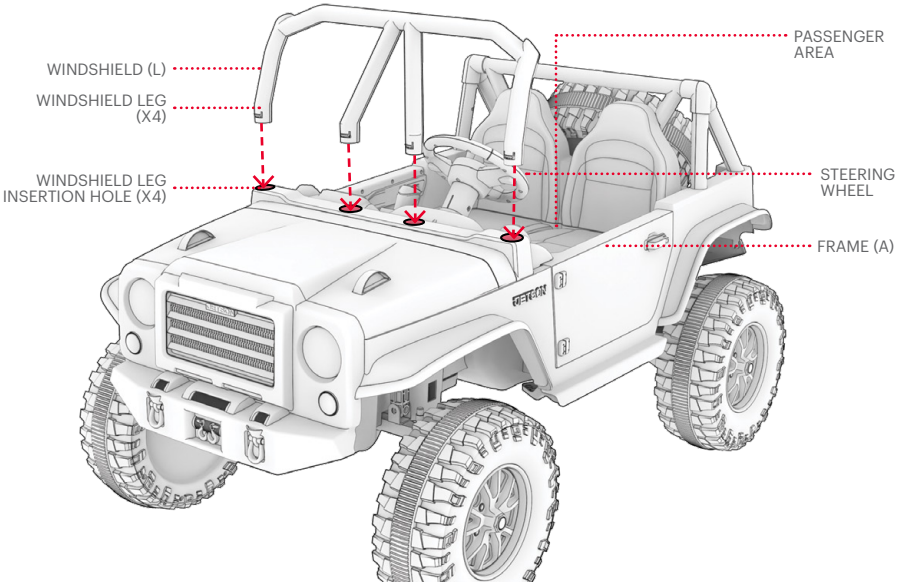

3. CHECK THAT THE WINDSHIELD IS SECURE ON THE FRAME.

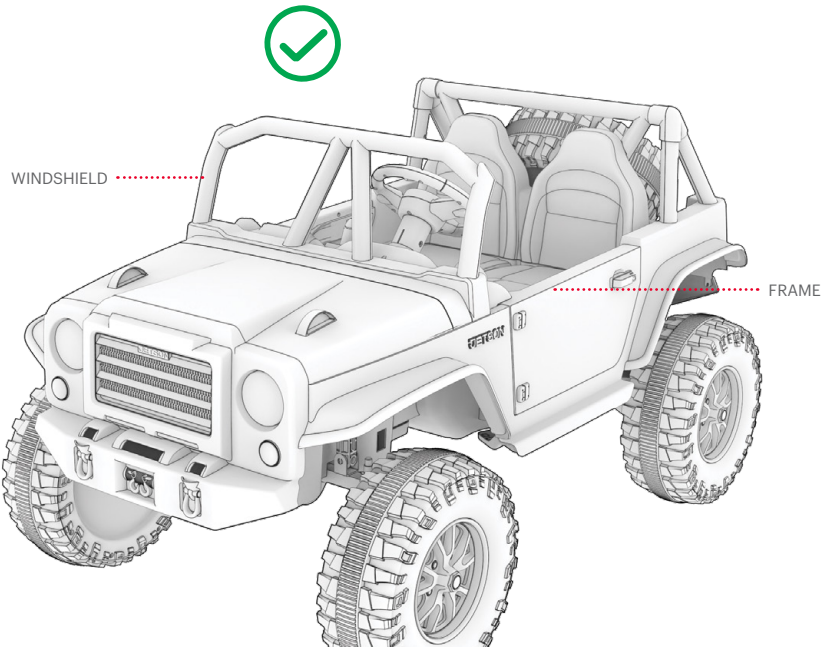

2.9 Connecting the Battery

1. USE THE HANDLES ON THE HOOD TO LIFT THE HOOD OPEN.
2. FROM THE 2 SETS OF WIRES IN THE BATTERY COMPARTMENT, MAKE THE ELECTRICAL CONNECTION BY CLICKING THE INSERTION COUPLER INTO THE RECEIVING COUPLER.

⚠ **IMPORTANT:** HANDLE ELECTRICAL COMPONENTS WITH CAUTION.

3. LOWER THE HOOD.

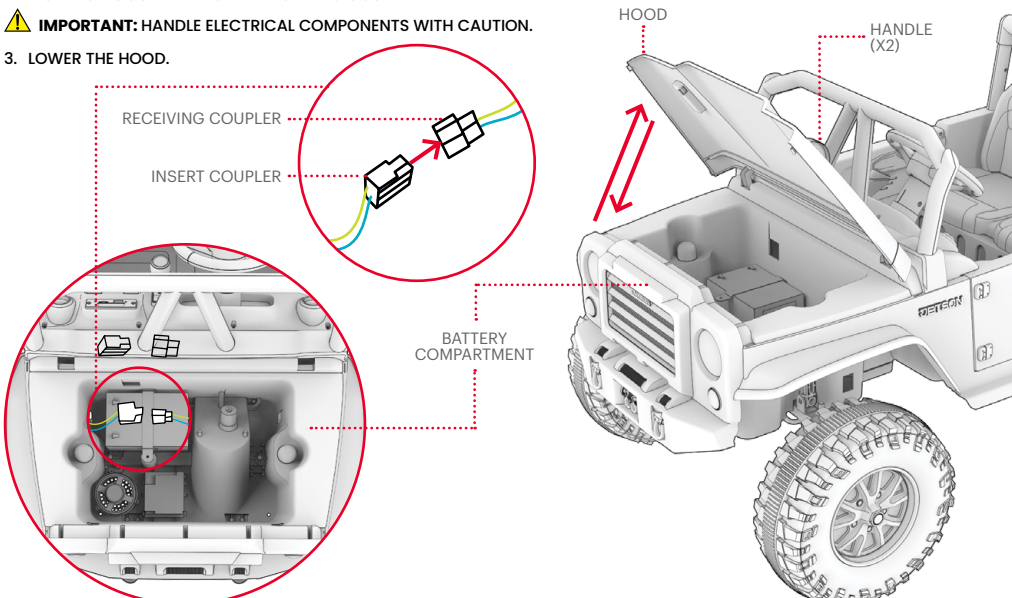

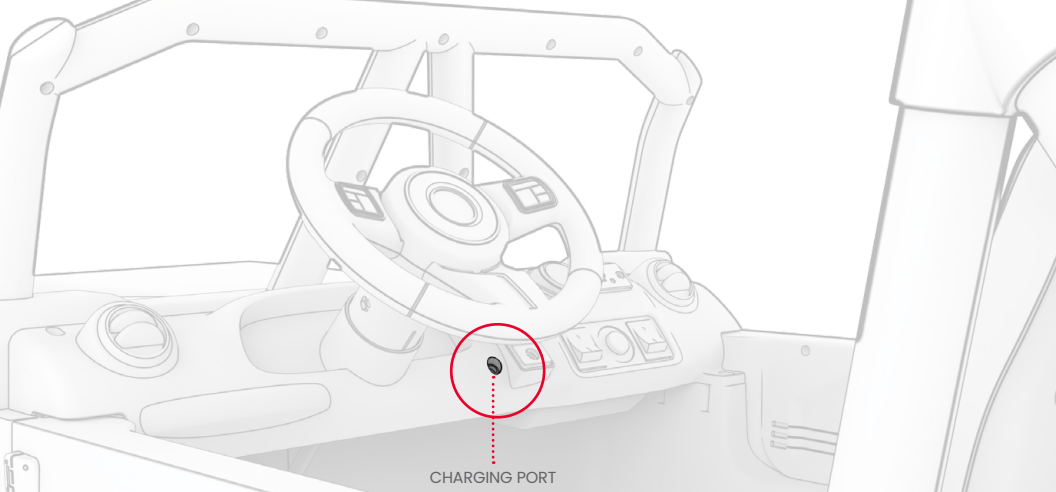

2.10 Charging the Battery

IMPORTANT: TO PREP THE BATTERY FOR LONG-TERM USE, AN EXTENDED INITIAL CHARGING SESSION IS NECESSARY. BEFORE RIDING THE VEGA FOR THE FIRST TIME, CHARGE THE BATTERY FOR A MINIMUM OF 18 HOURS—EVEN IF THE CHARGING INDICATOR LIGHT ON THE CHARGER IS ILLUMINATED IN GREEN. THEN, CHARGE ONLY UNTIL THE BATTERY POWER IS FULL—6 HOURS PER CHARGING SESSION.

1. PLUG THE CHARGER INTO THE WALL, AND THEN PLUG THE CHARGER CORD INTO THE CHARGING PORT.
2. WHEN THE INDICATOR LIGHT ON THE CHARGER TURNS FROM RED TO GREEN, YOUR BATTERY HAS REACHED FULL CHARGE. REMOVE THE CHARGER FROM THE CHARGING PORT AND UNPLUG THE CABLE FROM THE WALL OUTLET.

IMPORTANT CHARGING NOTES:

- ONLY USE THE INCLUDED CHARGER OR ONE OBTAINED DIRECTLY THROUGH JETSON LABELED WITH: SL12-12-04 OR THE PART SKU PJVEGA-CH.

⚠ FAILURE TO USE CORRECT CHARGER CAN RESULT IN FIRE AND EXPLOSION.

- ALWAYS KEEP THE CHARGING PORT CLOSED WHEN NOT ACTIVELY CHARGING THE BATTERY.
- NEVER TURN ON THE VEHICLE WHILE IT IS CHARGING.
- FOR BEST BATTERY HEALTH, CHARGE THE BATTERY FULLY DURING EACH CHARGING SESSION—ABOUT 6 HOURS.
- NEVER LEAVE YOUR VEHICLE CHARGING OVERNIGHT OR FOR EXTENDED PERIODS OF TIME.
- DO NOT ATTEMPT TO REMOVE OR DISASSEMBLE THE BATTERY.
- CHARGING AMBIENT TEMPERATURE RANGE: 32°F(0°C)-104°F(40°C)
- OPERATING AMBIENT TEMPERATURE RANGE: 32°F(0°C)-104°F(40°C)

CHARGING INDICATOR LIGHT ON THE CHARGER

- CHARGING

- CHARGING COMPLETE

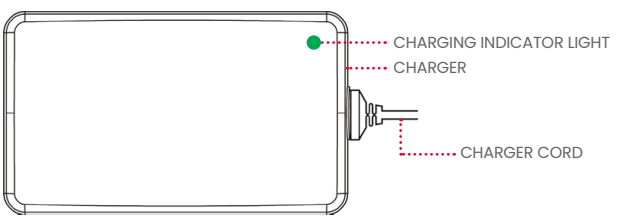

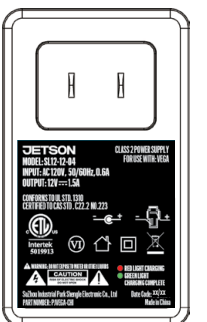

THIS IS THE MARKING
YOUR CHARGER WILL HAVE.

3. Making Moves

3.1 Opening & Closing the Doors

TO OPEN THE DOOR: SLIDE THE DOOR LEVER AND PIVOT THE DOOR AWAY FROM THE FRAME.
TO CLOSE THE DOOR: PUSH OR PULL THE DOOR BACK INTO THE FRAME.

3.2 Fastening the Seatbelt

POSITION BOTH STRAPS OF THE SEATBELT OVER THE LAP OF THE RIDER. CLICK THE INSERTION CLIP INTO THE RECEIVING CLIP. CHECK THAT THE BELT IS SECURE AND SNUG OVER THE RIDER'S LAP. IF NECESSARY, SHORTEN OR LENGTHEN THE BELT BY MOVING THE ADJUSTMENT SLIDE BUCKLE ALONG THE STRAP.

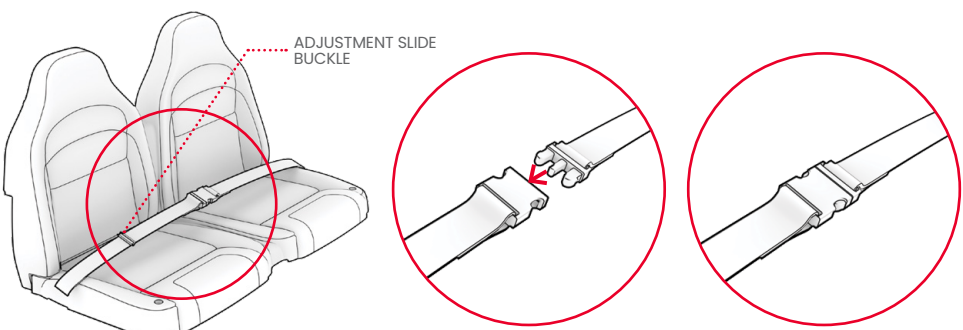

⚠ **IMPORTANT:** ENSURE THAT CHILD IS SECURELY FASTENED BY THE SEAT BELT BEFORE POWERING ON THE VEGA.

3.3 Using the Remote Control

YOU WILL NEED 2 AAA BATTERIES (NOT INCLUDED) TO OPERATE THE REMOTE CONTROL. WHEN THE REMOTE CONTROL IS BEING USED, IT GIVES PARENTAL OVER-RIDE OF THE VEHICLE'S MOVEMENT.

USE THE BUTTONS ON THE REMOTE CONTROL TO:

- SWITCH TRAVEL FROM SLOW (2 MPH) TO FAST (3 MPH) SPEEDS
- MOVE THE VEHICLE FORWARD OR IN REVERSE
- TURN THE VEHICLE LEFT OR RIGHT
- STOP THE VEHICLE

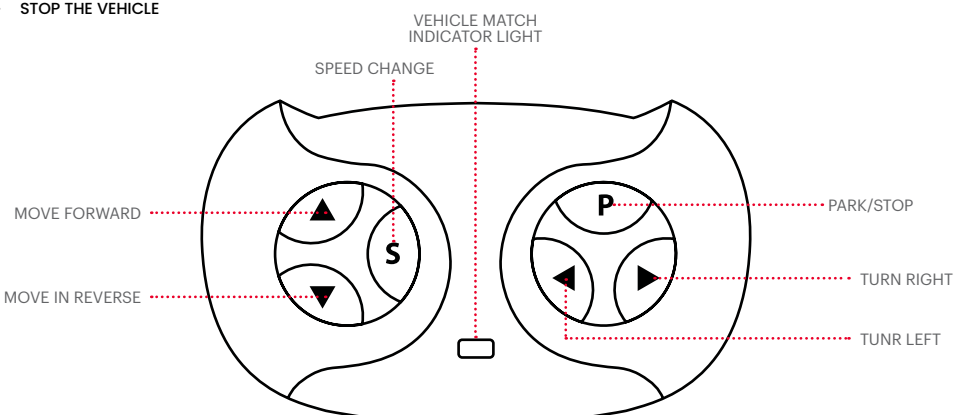

TO INSERT BATTERIES IN THE REMOTE CONTROL:

1. LOOSEN THE SCREW ON THE BATTERY COMPARTMENT ON THE BACK SIDE OF THE REMOTE CONTROL BY TWISTING THE SCREW COUNTERCLOCKWISE WITH THE PHILLIPS-HEAD SCREWDRIVER.
2. LIFT UP THE COMPARTMENT COVER.
3. PLACE 2 AAA BATTERIES AS DIRECTED BY THE +/- MARKINGS IN THE COMPARTMENT.
4. REPLACE THE COMPARTMENT COVER.
5. INSERT AND TIGHTEN THE SCREW IN THE HOLE BY TURNING IT CLOCKWISE WITH THE SCREWDRIVER.

TO RE-ESTABLISH CONNECTION OF THE REMOTE WITH YOUR VEGA: THE REMOTE CONTROL MAY NEED TO BE RE-PAIRED WITH YOUR VEHICLE IF THE CONNECTION IS LOST. TO RE-PAIR THE REMOTE CONTROL:

1. POWER ON THE VEGA (SECTION 3.4).
2. SIMULTANEOUSLY PRESS AND HOLD THE FORWARD AND REVERSE KEYS FOR 3 SECONDS UNTIL THE INDICATOR LIGHTS CHANGE FROM A FLASHING RED PATTERN TO A SOLID RED ILLUMINATION.

3.4 A Guide to Your Dashboard & Controls

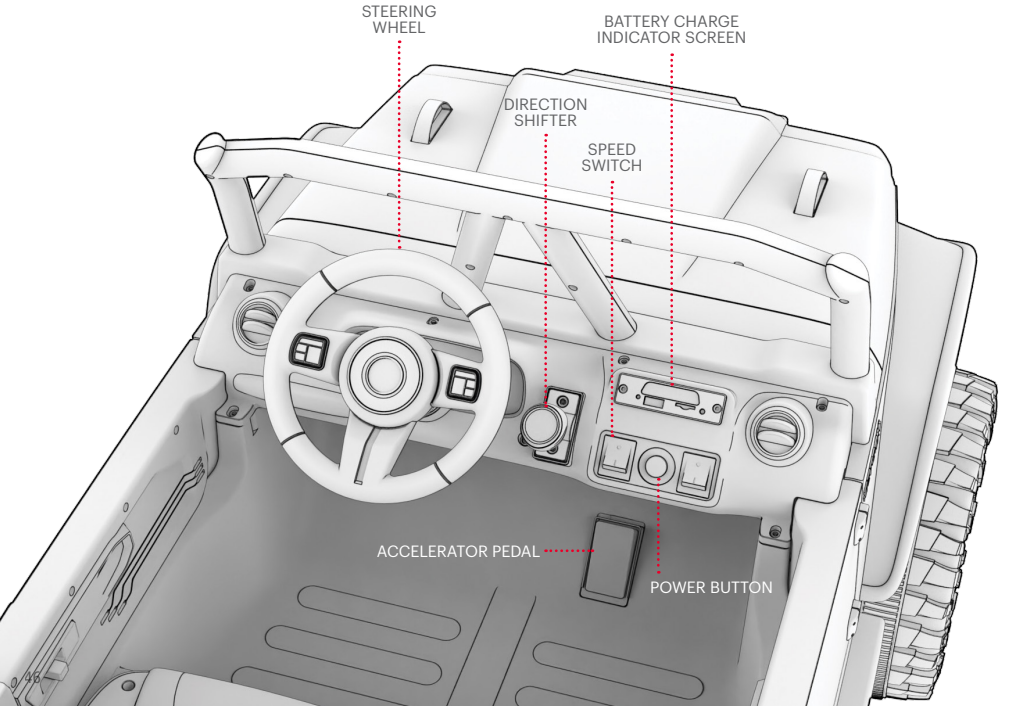

TO TURN THE VEGA ON OR OFF: QUICK-PRESS THE POWER BUTTON.

TO MOVE THE VEGA: PUSH DOWN ON THE ACCELERATOR PEDAL.
TO SLOW DOWN: EASE UP ON THE PEDAL.
TO STOP: RELEASE THE ACCELERATOR PEDAL.

TO TURN: ROTATE THE STEERING WHEEL TO THE LEFT OR RIGHT.

TO CHANGE DIRECTION: PUSH THE SHIFTER FOR FORWARD OR BACKWARD.

TO CHANGE SPEEDS: TOGGLE THE SPEED SWITCH TO LOW OR HIGH.
LOW: 2 MPH
HIGH: 3 MPH

BATTERY CHARGE LEVEL

BATTERY CHARGE INDICATOR SCREEN ILLUMINATION			
CHARGE PERCENTAGE	65-100%	34-65%	1-33% (CHARGE YOUR BATTERY NOW!)

IMPORTANT: WHEN THE BATTERY CHARGE DEPLETES TO 0%, THE VEHICLE WILL POWER OFF. CHARGE THE VEHICLE TO FULL POWER (SECTION 2.10) PRIOR TO YOUR NEXT RIDE.

3.5 Maximizing Speed & Run Time

IN IDEAL CONDITIONS, THE MAXIMUM SPEED THAT CAN BE ACHIEVED IS 3 MILES PER HOUR (MPH) AND THE MAXIMUM RUN TIME PER BATTERY CHARGE IS 45 MINUTES.

THE HARDER THE MOTOR NEEDS TO WORK, THE FASTER YOUR BATTERY WILL DRAIN AND THE HARDER IT WILL BE TO REACH AND MAINTAIN TOP SPEEDS. THE FOLLOWING FACTORS WILL ALSO AFFECT HOW FAST YOU CAN TRAVEL AND HOW LONG CAN RIDE FROM A SINGLE CHARGE.

- **RIDING SURFACE** – TRAVELING OVER A ROUGH SURFACE CAUSES FRICTION, WHICH CAN SLOW YOU DOWN AND REQUIRES THE MOTOR TO WORK HARDER, WHICH DRAINS IT FASTER. WHEN POSSIBLE, CHOOSE A SMOOTH RIDING SURFACE.
- **CARRYING WEIGHT** – MORE CARRYING WEIGHT DECREASES ACHIEVABLE SPEED AND RUN TIME.
- **RIDING STYLE** – FREQUENT STARTING AND STOPPING WILL REDUCE RUN TIME.
- **AIR TEMPERATURE** – THE IDEAL TEMPERATURE FOR RIDING AND STORING THE VEGA IS BETWEEN 50-75°F (10-23.9°C).
- **INCLINE** – THE MOTOR HAS TO WORK HARDER WHEN YOU RIDE UPHILL, AND GOING AGAINST GRAVITY MAKES IT HARD TO HIT THE MAXIMUM ACHIEVABLE SPEED. RIDE ON FLAT SURFACES WHEN POSSIBLE.
- **BATTERY MAINTENANCE** – TIMELY BATTERY CHARGING AFTER EVERY RIDE HELPS MAINTAIN BATTERY CAPACITY AND STRENGTH.

4. Safe Journeying

4.1 Pre-Ride Safety Checks

CONDUCT THESE IMPORTANT SAFETY CHECKS BEFORE EVERY RIDE:

SEAT BELT
- CHECK THAT THE SEAT BELT IS SECURELY ATTACHED TO THE SEAT.
- ENSURE THAT THE BELT CAN BE FASTENED SECURELY WITH THE CLIPS AND ADJUSTMENT BUCKLE.

FRAME
- CHECK THAT THE FRAME IS NOT DAMAGED, BENT, OR CRACKED.

STEERING
- CHECK THAT THE HANDLEBAR AND FRONT WHEELS ROTATE IN ALIGNMENT.
- CHECK THAT THE HANDLEBAR IS SECURED IN POSITION.

WHEELS
- CHECK THAT WHEELS DO NOT SHOW SIGNS OF EXCESSIVE WEAR OR ARE DAMAGED.
- CHECK THAT THE WHEELS ROTATE FREELY.
- CHECK THAT THE WHEELS ARE CLEAR OF DEBRIS.

4.2 Helmet Safety

A HELMET SHOULD BE WORN BY THE RIDER AT ALL TIMES.



PROPER POSITIONING:
THE FOREHEAD IS COVERED
BY THE HELMET.



IMPROPER POSITIONING:
THE FOREHEAD IS EXPOSED.
A FALL COULD RESULT IN SERIOUS INJURY.

*** WEAR A HELMET, APPROPRIATE CLOTHING, SHOES, AND SAFETY GEAR. AVOID CLOTHING THAT CAN GET CAUGHT INTO OR UNDER THE WHEELS. CLOSED-TOE, FLAT SHOES ARE RECOMMENDED. WEAR AN ASTM F1492 APPROVED HELMET AND PROTECTIVE GEAR TO PREVENT INJURY IN THE EVENT OF AN ACCIDENT.**

4.3 Care & Maintenance

CLEANING THE VEGA

- TO CLEAN THE VEHICLE, CAREFULLY WIPE WITH A DAMP CLOTH AND THEN DRY WITH A DRY CLOTH. DO NOT APPLY WATER DIRECTLY TO THE PRODUCT, AS THE ELECTRICAL AND ELECTRONIC SYSTEMS MAY GET WET, WHICH COULD LEAD TO A MALFUNCTION THAT PUTS RIDER SAFETY AT RISK.
- IF THE ELECTRIC PARTS OR BATTERY GET WET, DO NOT POWER ON THE VEHICLE. CONTACT THE JETSON CARE TEAM FOR ASSISTANCE.

STORING THE VEGA

- STORE THE VEHICLE INDOORS AND IN A DRY PLACE.
- COVER THE VEHICLE TO PROTECT IT AGAINST DUST.
- FULLY CHARGE THE BATTERY BEFORE STORING FOR EXTENDED PERIODS OF TIME. ONCE IN STORAGE, CHARGE THE BATTERY ONCE A MONTH.

BATTERY CARE AND PRECAUTIONS

- KEEP AWAY FROM FIRE AND EXCESSIVE HEAT.
- TIMELY BATTERY CHARGING AFTER EVERY RIDE WILL PROLONG BATTERY LIFE.
- AVOID INTENSE PHYSICAL IMPACT AND/OR SEVERE VIBRATION.
- PROTECT FROM WATER AND MOISTURE.
- DO NOT DISASSEMBLE THE BATTERY.
- CONTACT THE JETSON CARE TEAM IF THERE ARE ANY ISSUES WITH THE BATTERY.

Stay connected.

Be sure to follow **@ridejetson**
on social media to learn about fantastic offers,
giveaways, and all the latest Jetson news.



Loving your ride?

Then be sure to leave a review at ridejetson.com/reviews.
We can't wait to hear from you!

JETSON

#MakeMoves

Questions? Let us help.

ridejetson.com/support
ridejetson.com/chat

To exercise your product's warranty or inquire about warranty coverage, contact us directly.

1-888-976-9904

Manufactured in Zhejiang, China
Imported by Jetson Electric Bikes LLC.
P.O. Box 320149, 775 4th Ave #2,
Brooklyn, NY 11232

www.ridejetson.com





Made in China
Date Code: 08/2024
Document Edition: v1.0

© 2024, JETSON. ALL RIGHTS RESERVED. Manufactured by JETSON ELECTRIC BIKES LLC.
No portion of this document, including shape, copy, graphics, and design, may be reproduced or transmitted in any form or by any means.