A GUIDE FOR YOUR RIDE.

IMPORTANT:
Read carefully and retain for future reference.

JETSON

TWEE
3-Wheel Light-Up Kick Scooter.

MODEL SKU(S): JTWEE-GRN | JTWEE-PNK

OUR TOP TWO RIDING RULES:

BE SAFE.
HAVE FUN!

MANUFACTURED IN YONGKANG, CHINA
IMPORTED BY TRURIDE TECH LLC.
PO BOX 461, JERSEY CITY, NJ 07302-9998

DATE CODE: 01/2026
DOCUMENT EDITION: V1.0
MADE IN CHINA

© 2026, TRURIDE TECH. ALL RIGHTS RESERVED. MANUFACTURED FOR TRURIDE TECH LLC.
JETSON® IS A REGISTERED TRADEMARK USED UNDER LICENSE FROM JETSTREAM BRANDS LLC.
NO PORTION OF THIS DOCUMENT, INCLUDING SHAPE, GRAPHICS, AND DESIGN, MAY BE
REPRODUCED OR TRANSMITTED IN ANY FORM OR BY ANY MEANS.

Contents

Safety Warnings 4

1. About Your Product

1.1 Product Overview 6

1.2 Product Specs 7

1.3 Online Resources 7

2. Getting Started

2.1 Starting Notes 8

2.2 Helmet Safety 8

2.3 Attaching the Stem 9

2.4 Adjusting the Height of the Handlebar . . . 10

2.5 Inserting the Batteries 12

3. Making Moves

3.1 Accelerating & Keeping Momentum 13

3.2 Coasting 13

3.3 Turning 14

3.4 Using the Brake 14

3.5 Removing the Stem for Storage & Transport 15

3.6 Using the LED Lights 16

Care & Maintenance 18

Warranty Coverage & Product Registration 19

Connect with Us 20

SAFETY WARNINGS.

KEEP THESE INSTRUCTIONS.

INSTRUCTIONS ON THE RISK OF FIRE OR INJURY TO PERSONS AND IMPORTANT SAFETY INSTRUCTIONS

- Before use, please read the user manual and safety warnings carefully, and make sure you understand and accept all the safety instructions. The user will be responsible for any loss or damage caused by improper use.
- Before each cycle of operation, the operator shall perform the preoperation checks specified by the manufacturer: That all guards and pads originally supplied by the manufacturer are in proper place and in serviceable condition; That the braking system is functioning properly; That any and all axle guards, chain guards, or other covers or guards supplied by the manufacturer are in place and in serviceable condition; That tires are in good condition, inflated properly, and have sufficient tread remaining; The area that the product is to be operated should be safe and suitable for safe operation.
- Components shall be maintained and repaired in accordance with the manufacturer's specifications and using only the manufacturer's authorized replacement parts with installation performed by dealers or other skilled persons.
- Do not mix old and new batteries.
- Do not mix alkaline, standard (carbon-zing) or rechargeable batteries.
- This product should not be used by children or persons with reduced physical, sensory or mental capabilities, or lack of experience and knowledge, unless they have been given supervision or instruction (IEC 60335-1/A2:2006).
- Unsupervised children should not play with the product (IEC 60335-1/A2:2006).
- Adult supervision is required.
- Units shall not be operated to perform racing, stunt riding, or other maneuvers, which may cause loss of control, or may cause uncontrolled operator/passenger actions or reactions.
- Never use near motor vehicles.
- Avoid sharp bumps, drainage grates, and sudden surface changes. Scooter may suddenly stop.
- Avoid streets and surfaces with water, sand, gravel, dirt, leaves, and other debris. Wet weather impairs traction, braking, and visibility.
- Avoid riding around flammable gas, steam, liquid, or dust that could cause fire.
- Operators shall adhere to all of the manufacturer's recommendations and instructions, as well as comply with all laws and ordinances: Units without headlights shall be operated only with adequate daylight conditions of visibility, and; Owners shall be encouraged to highlight (for conspicuity) using lighting, reflectors, and for low-riding units, signal flags on flexible poles.
- Persons with the following conditions shall be cautioned not to operate: Those with heart conditions; Pregnant women; Persons with head, back, or neck ailments, or prior surgeries to those areas of the body; and persons with any mental or physical conditions that may make them susceptible to injury or impair their physical dexterity or mental capabilities to recognize, understand, and perform all of the safety instructions and to be able to assume the hazards inherent in unit use.
- Do not ride at night.
- Do not ride after drinking or taking prescription medication.
- Do not carry items when riding.
- Never operate the product barefooted.
- Always wear shoes and keep shoelaces tied.
- Make sure your feet are always placed securely on the deck.
- Always give way to pedestrians.

- Be alert to things in front and far away from you.
- Operators always shall use appropriate protective clothing, including but not limited to a helmet, with appropriate certification, and any other equipment recommended by the manufacturer: Always wear protective equipment such as helmet, knee pads, and elbow pads.
- Do not allow distractions when riding, such as answering the phone or engaging in any other activities.
- The product cannot be ridden by more than one person.
- When you ride the product along with other riders, always keep a safe distance to avoid a collision.
- When turning, be sure to maintain your balance.
- Riding with improperly adjusted brakes is dangerous and can result in serious injury or death.
- The brake may become hot while operating, do not touch the brake with your bare skin.
- Applying brakes too hard or too suddenly can lock up a wheel, which could cause you to lose control and fall. Sudden or excessive application of the brake may result in injury or death.
- If the brake loosens, please adjust with a hexagon wrench, screwdriver, or other applicable tool, or please contact the Jetson Care Team.
- Replace worn or broken parts immediately.
- Check whether all safety labels are in place and understood before riding.
- The owner shall allow the use and operation of the unit after a demonstration that such operators can understand and operate all components of the unit before use.
- Do not ride without proper training. Do not ride at high speeds, on uneven terrain, or on slopes. Do not perform stunts or turn abruptly.
- Recommended for indoor use.
- Only use the battery(ies) specified by the manufacturer
- Prolonged exposure to UV rays, rain and the elements may damage the enclosure materials, store indoors when not in use.
- The rider should not exceed 110 lb (49.9 kg).

MODIFICATIONS

Do not attempt to disassemble, modify, repair, or replace the unit or any components of the unit without instruction from the Jetson Care Team. This will void any warranty, and can lead to malfunctions which may cause injury.

ADDITIONAL OPERATION PRECAUTIONS

Do not lift the product off the ground while it is on and the wheels are in motion. This can result in freely spinning wheels, which may cause injury to yourself or others nearby. Do not jump on or off the product, and do not jump while using it. Always keep your feet firmly planted on the foot rest while in operation. Always check the battery charge before using.

⚠ WARNING:

Failure to comply with the following instructions may result in injury to the child or others.

- Keep small parts away from children during assembly.
- Accessory must be assembled and removed by an adult.
- Frequently inspect the product for damage.

*** ADULT ASSEMBLY IS REQUIRED.**

⚠ WARNING:

To reduce the risk of injury, adult supervision is required. Never use in roadways, near motor vehicles, on or near steep inclines or steps, swimming pools or other bodies of water; always wear shoes, and never allow more than 1 rider.

CALIFORNIA PROPOSITION 65

⚠ WARNING:

THIS PRODUCT CAN EXPOSE YOU TO CHEMICALS INCLUDING CHROMIUM (HEXAVALENT COMPOUNDS), WHICH IS KNOWN TO THE STATE OF CALIFORNIA TO CAUSE CANCER AND BIRTH DEFECTS OR OTHER REPRODUCTIVE HARM. FOR MORE INFORMATION GO TO: WWW.P65WARNINGS.CA.GOV.

1. ABOUT YOUR PRODUCT.

1.1 Product Overview

1. HANDLEBAR
2. LIGHTING BUTTON
3. STEM CLAMP
4. STEM
5. FOLDING MECHANISM
6. FRONT WHEEL (×2; MOTION-ACTIVATED LED LIGHT-UP)
7. DECK (LED LIGHT-UP)
8. BATTERY COMPARTMENT
9. REAR FOOT BRAKE
10. REAR WHEEL (MOTION-ACTIVATED LED LIGHT-UP)

Tool included for setup & adjustment:



2-bit Phillips-head screwdriver (A) and 5mm Allen key (B)* tool

NOTE: IMAGES MAY NOT REFLECT EXACT APPEARANCE OF ACTUAL PRODUCT.

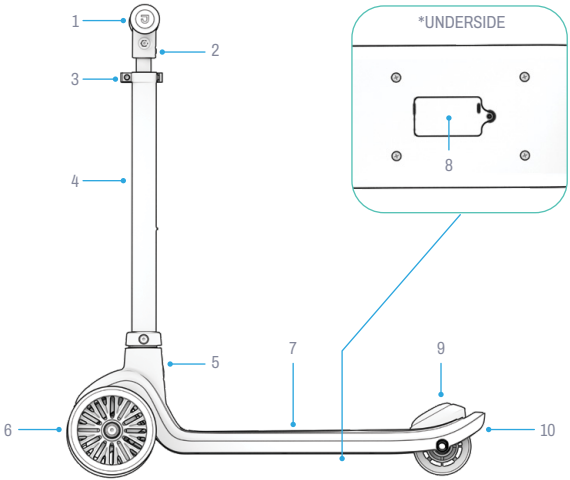

1.2 Product Specs

- WHEEL SIZES: 4.7 IN (FRONT), 3.1 IN (REAR)
- PRODUCT DIMENSIONS: 22.2 IN (L) × 11.3 IN (W) × 24.6 IN (H)
- DECK SIZE: 21.9 IN (L) × 5.3 IN (W)
- HANDLEBAR HEIGHT: 24.6 IN - 32.3 IN
- WEIGHT LIMIT: 110 LB
- PRODUCT WEIGHT: 7.1 LB
- BATTERIES REQUIRED: 3AA (NOT INCLUDED)
- RECOMMENDED AGE: 3+

1.3 Online Resources

Scan for our most updated product onboarding materials and support resources.

Find our collection of user manuals at https://ridejetson.com/pages/product-manuals

2. GETTING STARTED.

2.1 Starting Notes

- KICK OFF YOUR ADVENTURE RIGHT: PRIOR TO USE OF THIS PRODUCT, CAREFULLY READ THE ENTIRE USER MANUAL, INCLUDING SAFETY WARNINGS. MAKE SURE YOU UNDERSTAND, ACCEPT, AND ADHERE TO ALL:
  - MANUFACTURER'S RECOMMENDATIONS.
  - SAFETY INSTRUCTIONS AND WARNINGS.
  - LOCAL RIDING AND OPERATIONAL LAWS AND ORDINANCES.

- REMOVE ALL PROTECTIVE PACKAGING PIECES PRIOR TO BEGINNING SETUP.

- THE DIRECTIONS GIVEN IN THIS MANUAL—RIGHT, LEFT, FRONT/FORWARD, AND REAR/BACK—ARE ORIENTED AS THE RIDER WOULD SEE THEM WHEN STANDING ON THE SCOOTER. THE "RIGHT SIDE" OF THE SCOOTER, FOR EXAMPLE, IS THE SIDE WHERE THE RIDER'S RIGHT HAND WILL BE.

2.2 Helmet Safety

A HELMET SHOULD BE WORN BY THE RIDER AT ALL TIMES.



IMPROPER POSITIONING:
THE FOREHEAD IS EXPOSED. A FALL COULD RESULT IN SERIOUS INJURY.



PROPER POSITIONING:
THE FOREHEAD IS COVERED BY THE HELMET.

**WEAR A HELMET, APPROPRIATE CLOTHING, SHOES, AND SAFETY GEAR. AVOID CLOTHING THAT CAN GET CAUGHT INTO OR UNDER THE WHEELS. CLOSED-TOE, FLAT SHOES ARE RECOMMENDED. WEAR AN ASTM F1492 APPROVED HELMET AND PROTECTIVE GEAR TO PREVENT INJURY IN THE EVENT OF AN ACCIDENT.*

2.3 Attaching the Stem

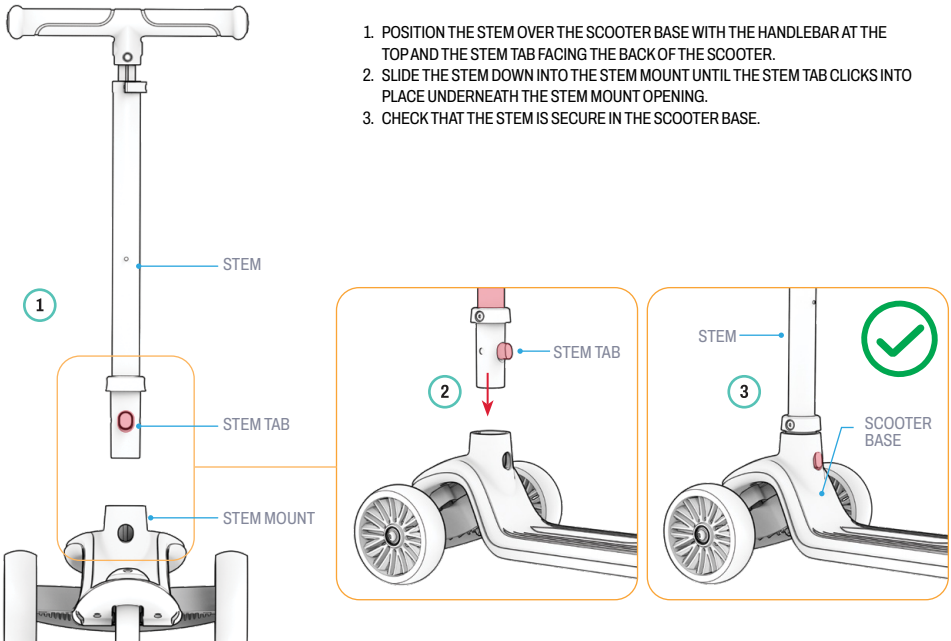

1. POSITION THE STEM OVER THE SCOOTER BASE WITH THE HANDLEBAR AT THE TOP AND THE STEM TAB FACING THE BACK OF THE SCOOTER.
2. SLIDE THE STEM DOWN INTO THE STEM MOUNT UNTIL THE STEM TAB CLICKS INTO PLACE UNDERNEATH THE STEM MOUNT OPENING.
3. CHECK THAT THE STEM IS SECURE IN THE SCOOTER BASE.

2.4 Adjusting the Height of the Handlebar

1. USING THE ALLEN KEY TIP OF THE 2-BIT TOOL, LOOSEN THE STEM CLAMP KNOB BY TURNING IT COUNTERCLOCKWISE.
2. PULL OPEN THE STEM CLAMP LATCH.
3. PRESS IN THE STEM PIN (A) AND RAISE OR LOWER THE HANDLEBAR (B) UNTIL THE PIN CLICKS INTO ANOTHER STEM PIN HOLE.

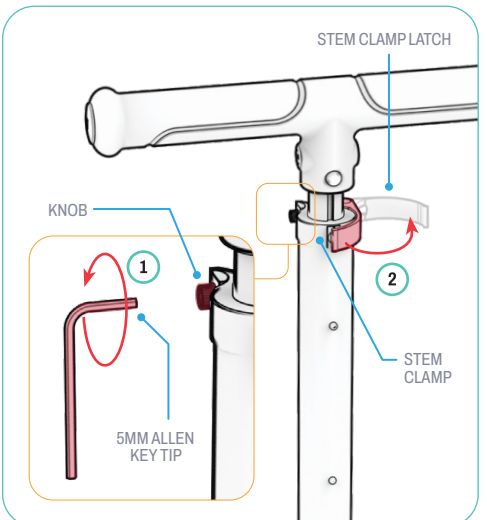

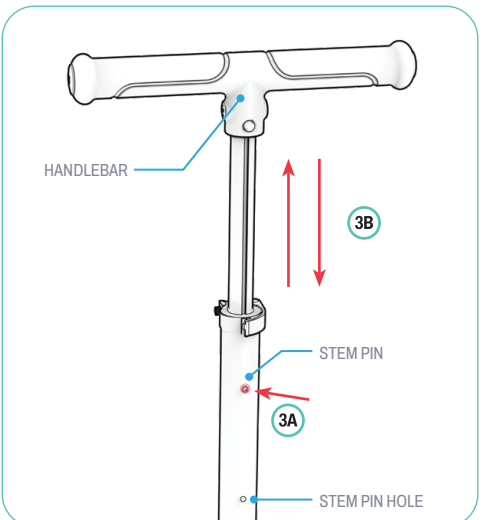

⚠ **CAUTION:** THE STEM PIN ALONE WILL NOT KEEP THE STEM SECURE. MAKE SURE THE STEM CLAMP IS TIGHTENED AND CLOSED BEFORE RIDING.

TROUBLESHOOTING: DO NOT OVERTIGHTEN THE STEM CLAMP KNOB. OVERTIGHTENING CAN PREVENT THE STEM CLAMP LATCH FROM OPENING AND CLOSING. IF YOU CANNOT OPEN OR CLOSE THE LATCH, THE KNOB ON THE CLAMP MAY BE TOO TIGHT. LOOSEN THE KNOB ½ ROTATION AT A TIME UNTIL YOU CAN UTILIZE THE LATCH.

4. CLOSE THE STEM CLAMP LATCH (A) AND TIGHTEN THE KNOB BY TURNING IT CLOCKWISE WITH THE ALLEN KEY (B).
5. CHECK THAT THE HANDLEBAR IS SECURE.

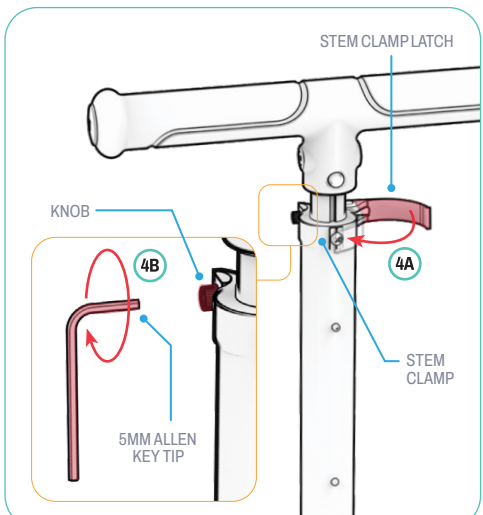

2.5 Inserting the Batteries

YOU WILL NEED 3 AA BATTERIES (NOT INCLUDED) TO OPERATE THE DECK AND STEM LIGHTS ON YOUR SCOOTER.

1. LOOSEN THE SCREW SECURING THE BATTERY COMPARTMENT COVER ON THE UNDERSIDE OF THE DECK BY TURNING IT COUNTERCLOCKWISE WITH THE SCREWDRIVER TIP (A) OF THE 2-BIT TOOL.
2. LIFT & REMOVE THE BATTERY COMPARTMENT COVER WITH SCREW.
3. PLACE 3 AA BATTERIES IN PLACE ACCORDING TO THE +/- ORIENTATION INDICATED INSIDE OF THE BATTERY COMPARTMENT.
4. REPLACE THE BATTERY COMPARTMENT COVER, ENSURING THAT THE SCREW IS ALIGNED WITH THE SCREW HOLE.
5. TIGHTEN THE SCREW BY TURNING IT CLOCKWISE WITH THE SCREWDRIVER.
6. CHECK THAT THE COMPARTMENT COVER AND SCREW ARE SECURE.

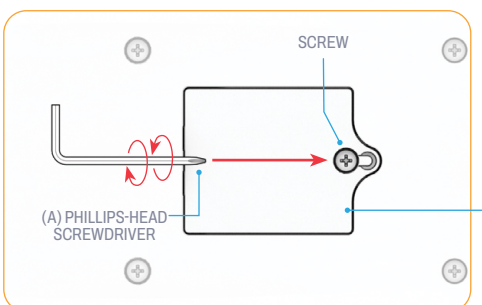

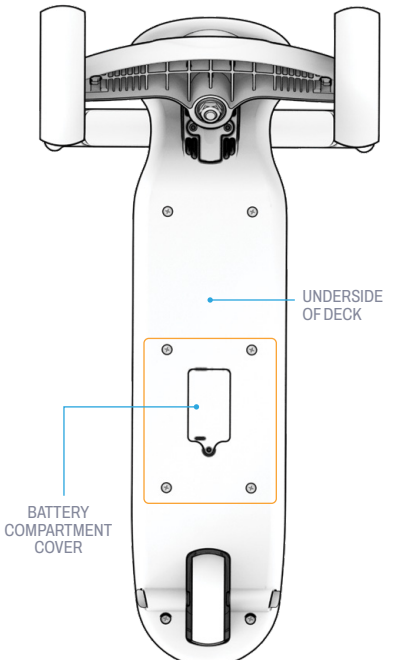

3. MAKING MOVES.

3.1 Accelerating & Keeping Momentum

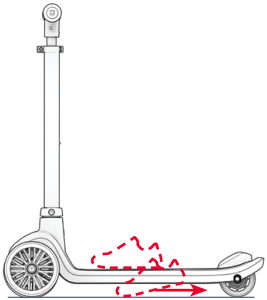

- PLACE ONE FOOT ON THE FRONT OF THE DECK FACING FORWARD.
- PUSH THE OTHER FOOT OFF THE GROUND TO PROPEL THE SCOOTER FORWARD. REPEAT AS NECESSARY TO ACHIEVE OR MAINTAIN DESIRED SPEED.

3.2 Coasting

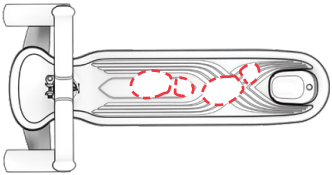

- PLACE KICKING FOOT ON THE REAR OF THE DECK, TURNED OUTWARD AT A SLIGHT ANGLE FOR STABILITY.

3.3 Turning

THIS SCOOTER IS A LEAN-TO-STEER SCOOTER. ITS TRIANGULAR BASE PROVIDES A STABLE FOUNDATION, WHICH HELPS NEW RIDERS KEEP THEIR BALANCE WHILE THEY LEARN HOW TO MOVE.

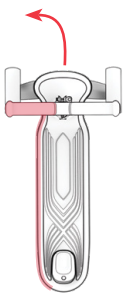

TO TURN LEFT:
SHIFT PRESSURE GENTLY TO THE LEFT WHILE MOVING FORWARD.

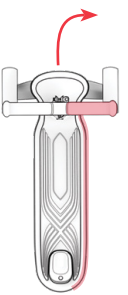

TO TURN RIGHT:
SHIFT PRESSURE GENTLY TO THE RIGHT WHILE MOVING FORWARD.

IMPORTANT: THE HANDLEBAR ON THIS SCOOTER DOES NOT ROTATE AND THE WHEELS DO NOT TURN. A SLIGHT SHIFTING OF PRESSURE ON THE HANDLEBAR TO THE LEFT OR THE RIGHT WHEN THE SCOOTER IS IN MOTION WILL CAUSE THE SCOOTER TO VEER GENTLY IN THE DIRECTION OF THE SHIFT.

3.4 Using the Brake

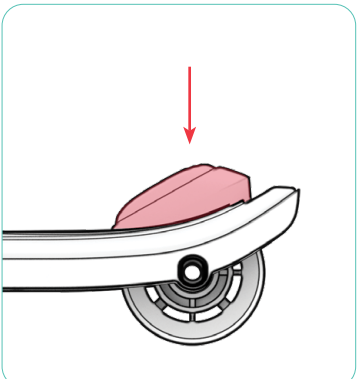

TO SLOW DOWN & STOP:

- PRESS DOWN GENTLY ON THE REAR FOOT BRAKE WITH THE REAR RIDING FOOT TO SLOW DOWN.
- APPLY MORE PRESSURE TO COME TO A COMPLETE STOP.

3.5 Removing the Stem for Storage & Transport

TO REMOVE THE STEM:

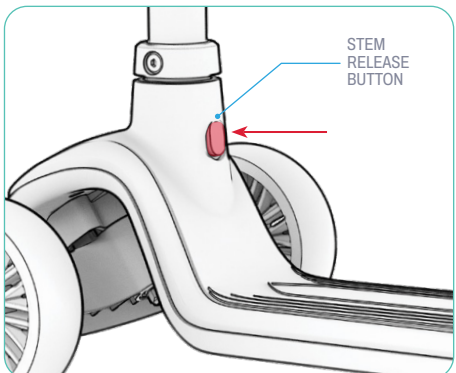

1. PRESS AND HOLD THE STEM RELEASE BUTTON IN.

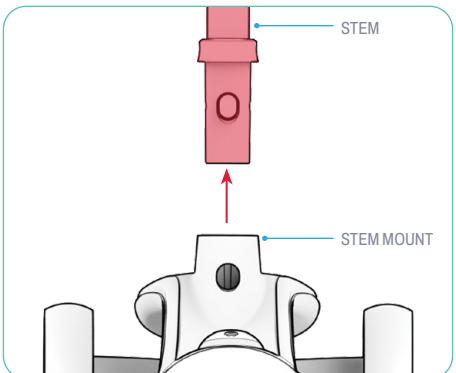

2. PULL THE STEM UP AND OUT OF THE STEM MOUNT.

TO REINSERT THE STEM:

SEE SECTION 2.3.

3.6 Using the LED Lights

To Turn on the Lights in the Deck:

- QUICK-PRESS THE LIGHTING BUTTON.

To Change The Lights:

- CYCLE THROUGH 11 DIFFERENT LIGHTING PATTERNS BY QUICK-PRESSING THE BUTTON AGAIN.
- STOP PRESSING WHEN YOU'VE LANDED ON THE LIGHTING PATTERN THAT FEELS RIGHT FOR YOUR RIDE.

To Turn Off The Lights:

- TO POWER OFF THE LIGHTS, PRESS AND HOLD THE LIGHTING BUTTON FOR 3 SECONDS.

Intelligent Auto-Off Feature:

- AFTER 5 MINUTES OF NON-USE, THE LIGHTS WILL POWER OFF. TO REACTIVATE THE LIGHTS, QUICK-PRESS THE LIGHTING BUTTON.

IMPORTANT: REMEMBER TO TURN OFF THE LIGHTS WHEN YOU'RE DONE RIDING TO PRESERVE BATTERY LIFE.

NOTE: THE LIGHTS ON THE WHEELS ARE MOTION-ACTIVATED AND WILL ILLUMINATE WHEN THE WHEELS ARE MOVING, EVEN IF THE OTHER LIGHTS ARE NOT POWERED ON.

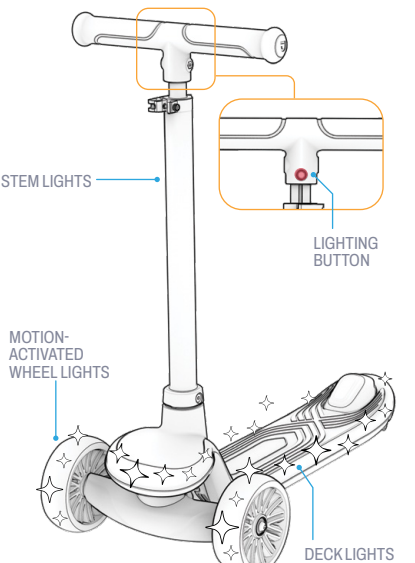


JETSON

CARE & MAINTENANCE.

Take good care of your Jetson to keep it riding smoothly and safely. Here's how:

Cleaning Your Jetson:

- TO CLEAN THE PRODUCT, CAREFULLY WIPE WITH A DAMP CLOTH AND THEN DRY WITH A DRY CLOTH.
- DO NOT APPLY WATER DIRECTLY TO THE PRODUCT. WATER CAN CAUSE DAMAGE TO THE ELECTRICAL SYSTEM OR CAUSE FRAME DETERIORATION, WHICH COULD LEAD TO A MALFUNCTION THAT PUTS RIDER SAFETY AT RISK.

Storing Your Jetson:

- STORE THE PRODUCT INDOORS AND IN A DRY PLACE.
- COVER THE PRODUCT TO PROTECT IT AGAINST DUST.
- REMOVE BATTERIES BEFORE STORING FOR EXTENDED PERIODS OF TIME.

Precautions:

- KEEP AWAY FROM FIRE AND EXCESSIVE HEAT.
- AVOID INTENSE PHYSICAL IMPACT AND/OR SEVERE VIBRATION.
- RIDE THE PRODUCT ON A SMOOTH, FLAT SURFACE.
- PROTECT FROM WATER OR MOISTURE.
- CONTACT THE JETSON CARE TEAM IF THERE ARE ANY ISSUES WITH THE PRODUCT.

WARRANTY COVERAGE & PRODUCT REGISTRATION.

GENERAL LIMITED WARRANTY

YOUR NEW JETSON PRODUCT IS WARRANTED AGAINST DEFECTS IN MATERIALS AND WORKMANSHIP AS INDICATED ON RIDEJETSON.COM/WARRANTY FOR A PERIOD OF TIME FROM THE DATE OF ORIGINAL RETAIL PURCHASE WHEN USED IN ACCORDANCE WITH JETSON'S USER MANUALS (REFER TO RIDEJETSON.COM/SUPPORT). **UNDER THIS WARRANTY, YOU WILL BE ABLE TO DIRECT YOUR CLAIMS TO JETSON EVEN IN SITUATIONS WHERE YOU PURCHASED THE JETSON PRODUCT FROM ONE OF OUR AUTHORIZED RETAILERS.** TO READ THE FULL TERMS OF OUR WARRANTY, VISIT RIDEJETSON.COM/WARRANTY.

PRODUCT REGISTRATION

REGISTER YOUR NEW JETSON TO FAST-TRACK YOU TOWARDS PERSONALIZED PRODUCT AND WARRANTY SUPPORT. MAKE YOUR MOVE AT RIDEJETSON.COM/PAGES/REGISTRATION.

CONNECT WITH US.

RIDEJETSON.COM/SUPPORT
RIDEJETSON.COM/CHAT

1-844-585-7462

Be sure to follow @ridejetson on social media to learn about fantastic offers, giveaways, and all the latest Jetson news.

LOVING YOUR RIDE?

Leave a review at
ridejetson.com/reviews.
We can't wait to hear from you!
#MakeMoves


JETSON